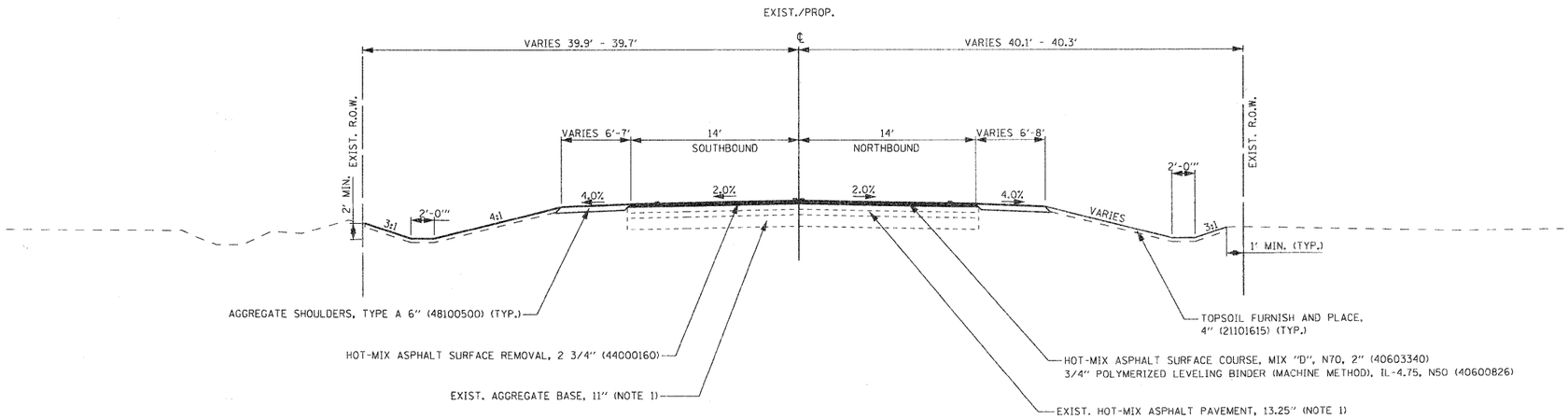

PROPOSED RIVERWOODS ROAD
STA. 3364+27 TO STA. 3365+40

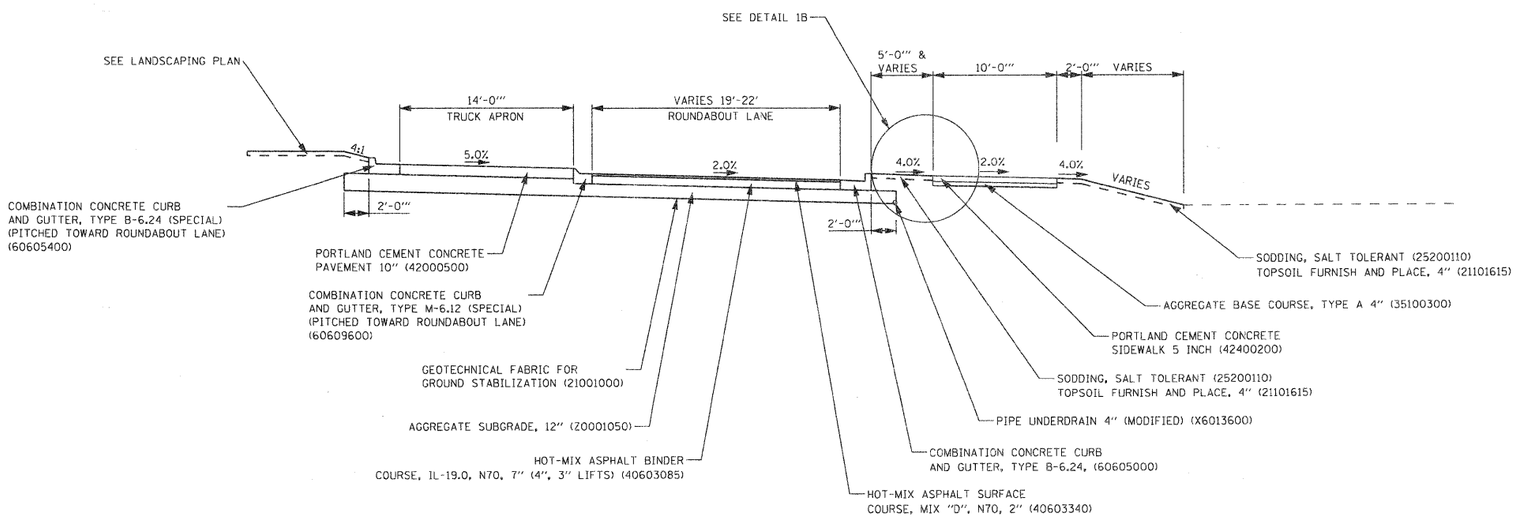

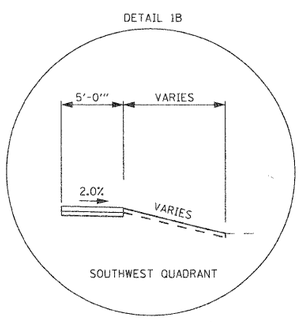

ROUNDABOUT
PROPOSED TYPICAL SECTION
STA. 100+00 TO STA. 103+58

* DENOTES PAVEMENT MARKING. SEE MARKING PLAN FOR TYPE.

NOTES:

1. APPROXIMATE AGGREGATE AND ASPHALT THICKNESSES ON NORTH LEG OF RIVERWOODS ROAD.

63415

REVISIONS / REMARKS					
NO.	DESCRIPTION	DATE	BY	DESIGNED BY:	JRM
		/ /		CHECKED BY:	MPK/JLC
		/ /		DATE:	1/22/2010

HDR Engineering, Inc. — 30 N LaSalle Street, Suite 3220, Chicago, IL 60602, 312-443-4900

LakeCounty Division of Transportation

RIVERWOODS ROAD /ROUNDABOUT
TYPICAL SECTIONS

ROUTE	SECTION	SECTION NUMBER	SHEET	SHEETS
CH	136	04-00136-06-CH	27	107

FILE NAME: