CONTRACT NO 66542

F.A.I. RTE.	SECTION	COUNTY	TOTAL SHEETS	SHEET NO.
80	(50-3)HBK	LASALLE	492	22
STA.		TO STA.		
FED. ROAD DIST. NO.	ILLINOIS	FED. AID PROJECT		

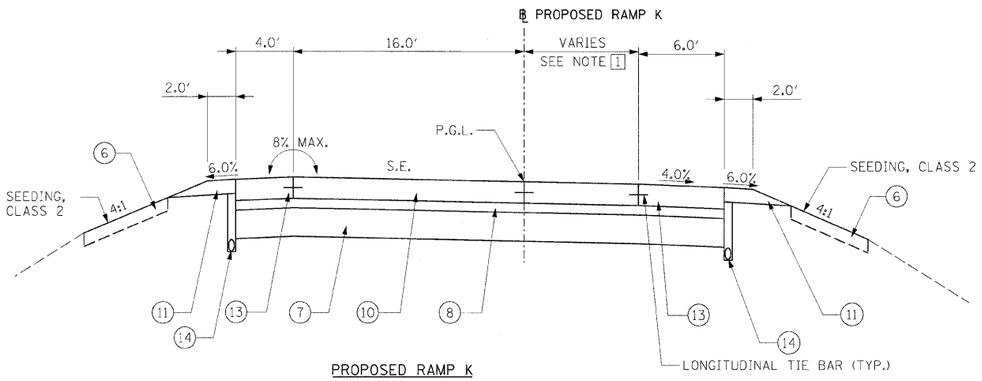

PROPOSED RAMP K
TYPICAL SECTION
STA. 406+63.04 TO STA. 418+79.04

NOTE:

1 PAVEMENT WIDTH
STA. 415+28.76 TO STA. 416+48.76 = TRANSITIONS FROM 0.00' TO 8.00'

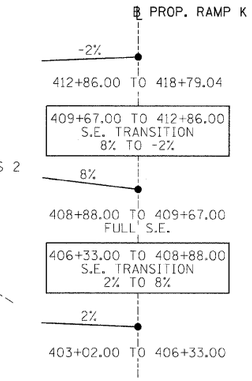

PROPOSED RAMP K
SUPERELEVATION DETAIL

PROPOSED RAMP K (RAMP I TRAFFIC SHOWN AND CONTROLS PAVEMENT DESIGN)

STRUCTURAL DESIGN TRAFFIC Year 2018
PV = 75% SU = 7.1% MU = 17.9%
ROAD/STREET CLASSIFICATION Class I
PERCENT OF STRUCTURAL DESIGN TRAFFIC IN DESIGN LANE:
P = 100% S = 100% M = 100%
TRAFFIC FACTOR Actual TF = 8.10 AC Type = N/A
Minimum TF= 11.16
PG GRADE: Top Binder = SBS PG64-28 Surface = 9 3/4" JOINTED PCC
Bottom Binder = PG64-22
SUBGRADE SUPPORT RATING:
SSR = POOR (Sta. 406+63.04 to 418+79.04)
SSR = _____ (Sta. _____ to _____)

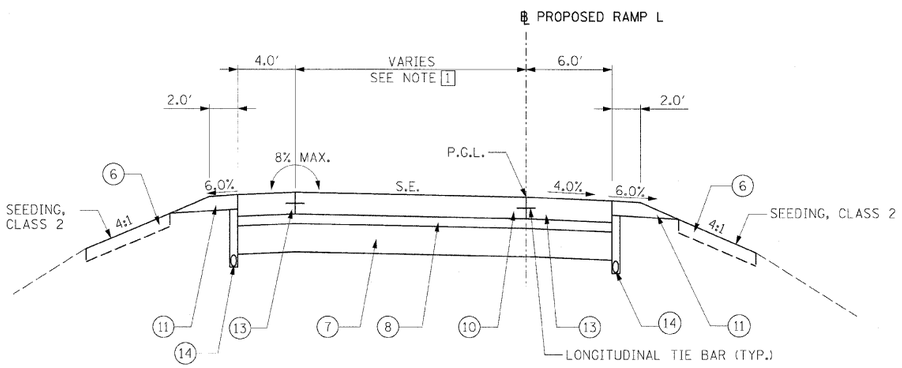

PROPOSED RAMP L
TYPICAL SECTION
STA. 501+41.06 TO STA. 513+72.71

NOTE:

1 PAVEMENT WIDTH
STA. 501+41.06 TO STA. 502+22.46 = TRANSITIONS FROM 20.73' TO 16.00'

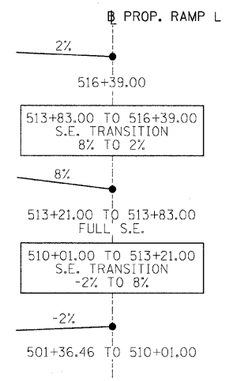

PROPOSED RAMP L
SUPERELEVATION DETAIL

PROPOSED RAMP L (RAMP I TRAFFIC SHOWN AND CONTROLS PAVEMENT DESIGN)

STRUCTURAL DESIGN TRAFFIC Year 2018
PV = 75% SU = 7.1% MU = 17.9%
ROAD/STREET CLASSIFICATION Class I
PERCENT OF STRUCTURAL DESIGN TRAFFIC IN DESIGN LANE:
P = 100% S = 100% M = 100%
TRAFFIC FACTOR Actual TF = 8.10 AC Type = N/A
Minimum TF= 11.16
PG GRADE: Top Binder = SBS PG64-28 Surface = 9 3/4" JOINTED PCC
Bottom Binder = PG64-22
SUBGRADE SUPPORT RATING:
SSR = POOR (Sta. 501+41.06 to 513+72.71)
SSR = _____ (Sta. _____ to _____)

LEGEND

1. EXISTING GROUND LINE
2. EXISTING HOT-MIX ASPHALT SURFACE COURSE 2 1/4"
3. EXISTING HOT-MIX ASPHALT LEVELING BINDER 3/4"
4. EXISTING PCC PAVEMENT 10"
5. EXISTING SUB-BASE GRANULAR MATERIAL, TYPE A 4"
6. PROPOSED TOPSOIL FURNISH AND PLACE 4"
7. PROPOSED SUB-BASE GRANULAR MATERIAL, TYPE A 12"
8. PROPOSED STABILIZED SUB-BASE HOT-MIX ASPHALT 4"
9. PROPOSED AGGREGATE BASE COURSE, TYPE B 12"
10. PROPOSED PORTLAND CEMENT CONCRETE PAVEMENT 9 3/4" (JOINTED)
11. PROPOSED AGGREGATE SHOULDERS, TYPE B 6"
12. PROPOSED HOT-MIX ASPHALT SHOULDERS 13 3/4"
13. PROPOSED PORTLAND CEMENT CONCRETE SHOULDERS 9 3/4"
14. PROPOSED PIPE UNDERDRAINS 4"
15. PROPOSED PIPE UNDERDRAINS 6"
16. PROPOSED CONCRETE MEDIAN SURFACE, 4 INCH
17. PROPOSED STEEL PLATE BEAM GUARDRAIL, TYPE A
18. PROPOSED HOT-MIX ASPHALT PAVEMENT (FULL DEPTH), 13 3/4"
19. PROPOSED COMBINATION CONCRETE CURB AND GUTTER, TYPE M-4.24
20. PROPOSED COMBINATION CONCRETE CURB AND GUTTER, TYPE B-6.24
21. PROPOSED MEDIAN, TYPE SM-4.06
22. PROPOSED HOT-MIX ASPHALT STABILIZATION 6" AT STEEL PLATE BEAM GUARD RAIL (TO BE PAID FOR AS HMA SHOULDERS 6")
23. PROPOSED SUB-BASE GRANULAR MATERIAL, TYPE A 6"

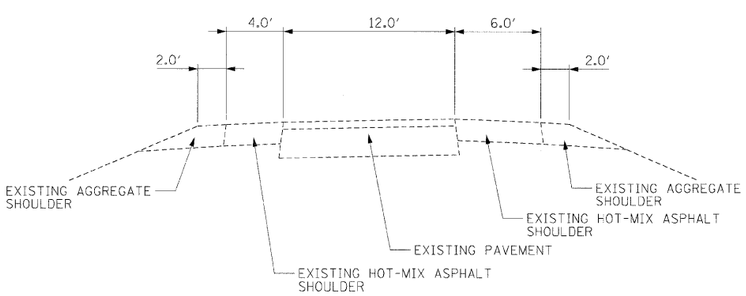

EXISTING RAMPS K & L

REVISIONS	
NAME	DATE

ILLINOIS DEPARTMENT OF TRANSPORTATION

TYPICAL SECTIONS
RAMPS K AND L

SCALE: VERT. N/A HORIZ. N/A
DATE
DRAWN BY JAP
CHECKED BY

HANSON
Hanson Professional Services Inc.
1525 South Sixth Street
Springfield, Illinois 62703-2886
Offices Nationwide

© Copyright Hanson Professional Services Inc. 2009

MODEL NAME = RAMPS K AND L
PLOT DATE = 7/25/2009
FILE NAME = C:\PW_Export\C-5017P.dgn
PLOT SCALE = 5.0000 ' / in.
USER NAME = John=80944

LAYOUT	JAP	07/20/05
DRAWN	JAP	07/20/05
REVIEWED	MTM	10/1/07