STATE OF ILLINOIS
DEPARTMENT OF TRANSPORTATION

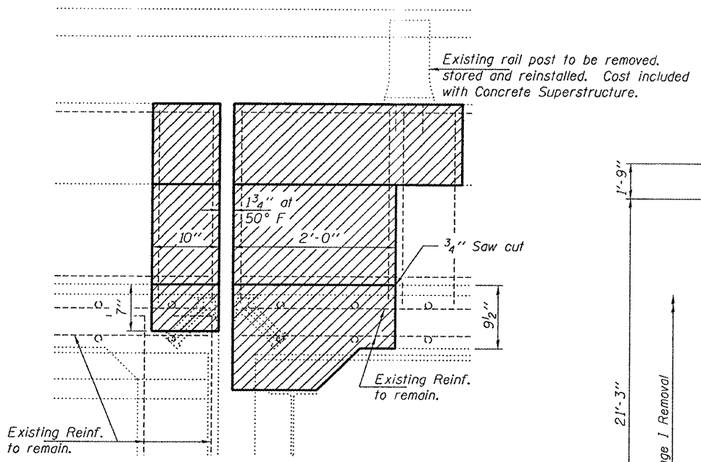

SECTION A-A
(Horizontal dims. at RT L's to end of deck)

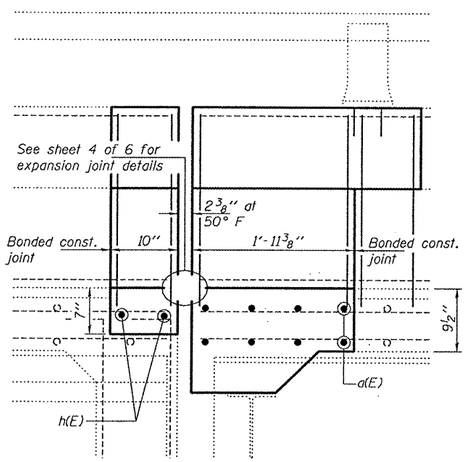

SECTION B-B
(Horizontal dims. at RT L's to end of deck)

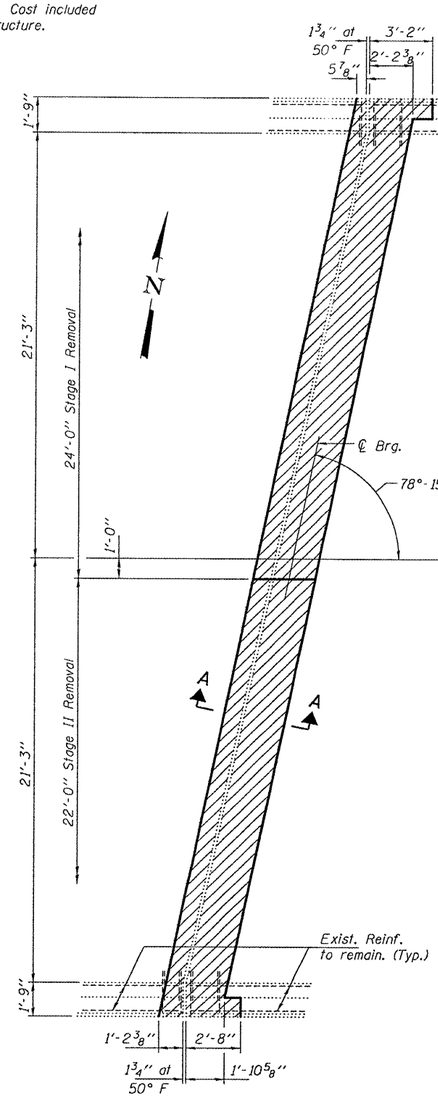

REMOVAL PLAN

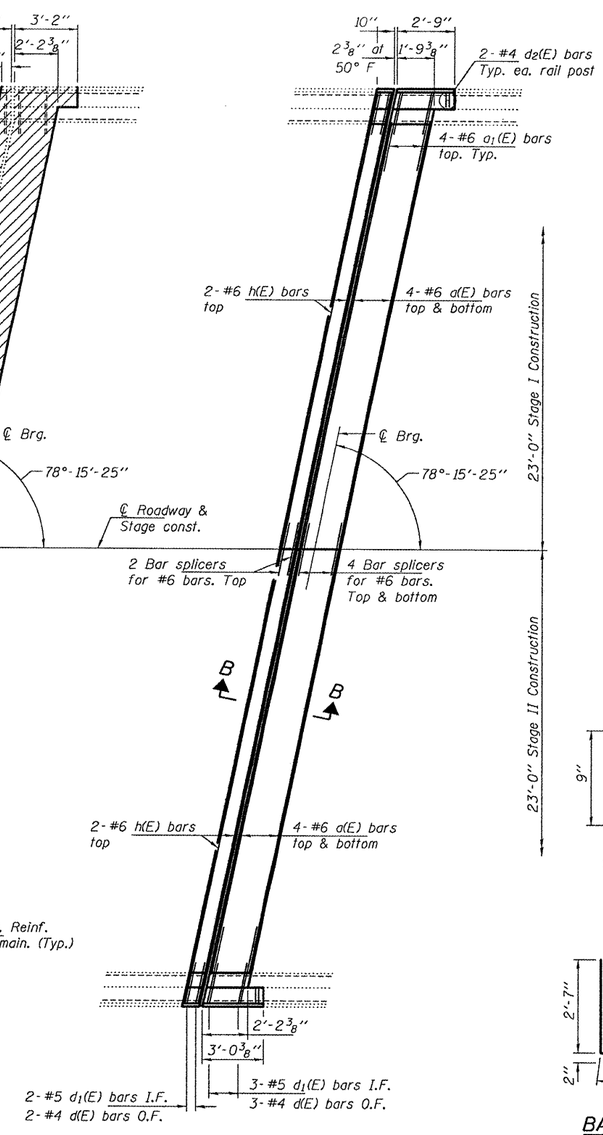

REPLACEMENT PLAN

Notes:
Hatched areas indicate removal.
For Section thru parapet, see sheet 3 of 6.

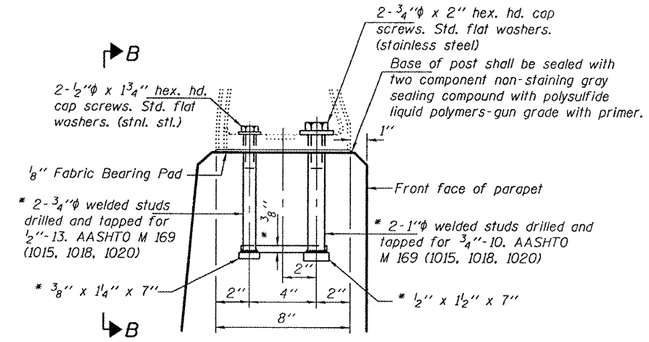

SECTION AT RAIL POST

* In lieu of the cast-in-place anchor device shown, the Contractor has the option of drilling and setting stainless steel anchor rods of the same diameter and grade as the specified cap screws according to Article 509.06 of the Standard Specifications. Embedment shall be according to the manufacturer's specifications.

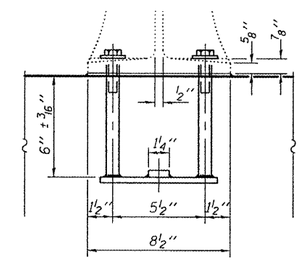

VIEW B-B

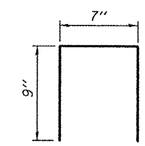

BAR d2(E)

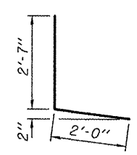

BAR d(E)

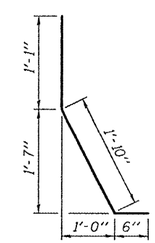

BAR d1(E)

BILL OF MATERIAL

Bar	No.	Size	Length	Shape
a(E)	16	#6	21'-9"	———
a1(E)	8	#6	4'-0"	———
d(E)	10	#4	4'-7"	L
d1(E)	10	#5	3'-5"	L
d2(E)	4	#4	2'-1"	⊓
h(E)	4	#6	23'-2"	———
Concrete Removal			Cu. Yd.	5.7
Concrete Superstructure			Cu. Yd.	5.7
Reinforcement Bars, Epoxy Coated			Lbs.	780

WEST ABUTMENT
JOINT REPLACEMENT DETAILS
FARMINGTON ROAD OVER FAI 474
SN 072-0118

DESIGNED	IJL
CHECKED	GGE
DRAWN	baliva
CHECKED	IJL GGE

FEBRUARY 11, 2010
EXAMINED D. Carl Perry
ENGINEER OF STRUCTURAL SERVICES
PASSED Ralph E. Anderson
ENGINEER OF BRIDGES AND STRUCTURES

SHEET NO. 2	F.A.I. RTE.	SECTION	COUNTY	TOTAL SHEETS	SHEET NO.
6 SHEETS	474	11 RS-3	PEORIA	40	22
			CONTRACT NO. 68502		
	FED. ROAD DIST. NO.	ILLINOIS	FED. AID PROJECT		

0720118.dgn 2/11/2010 1:14:54 PM