EXISTING TYPICAL CROSS SECTION (2)

(1) STA. 71+75.00 – STA. 74+50.00 (1)
(1) STA. 78+00.00 – STA. 79+80.00 (1)

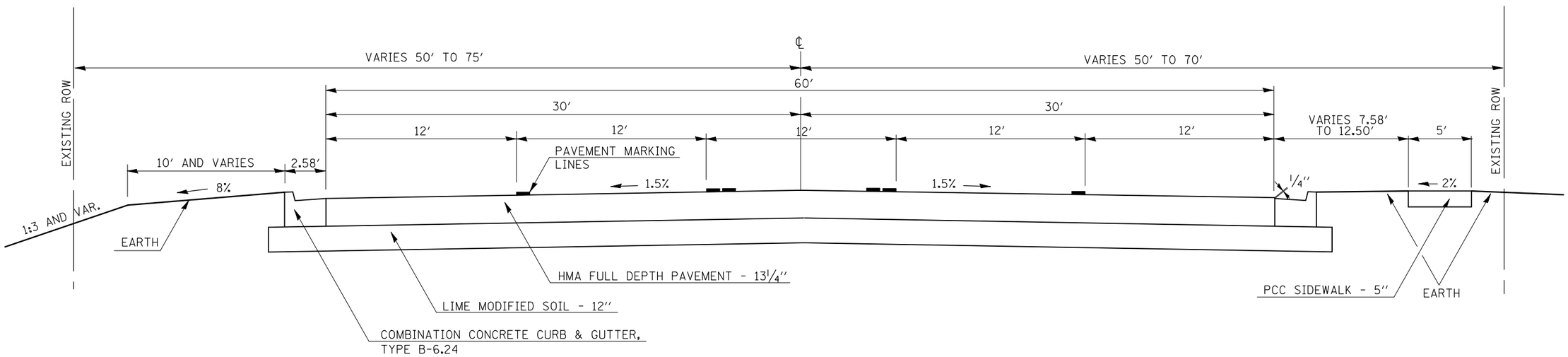

PROPOSED TYPICAL CROSS SECTION (2)

(1) STA. 71+75.00 – STA. 74+50.00 (1)
(1) STA. 78+00.00 – STA. 79+80.00 (1)

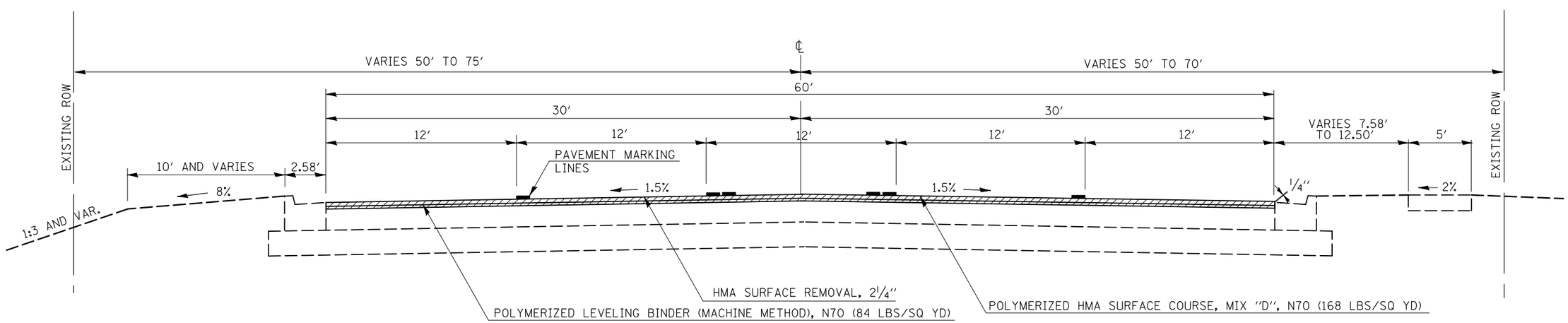

• (48-X1)RS&(48-X2,RX,RX-1)RS-1

FILE NAME = c:\pw_work\pwidot\bowerml\d0145216\d570124-sht-typical.dgn	USER NAME = bowerml	DESIGNED - MLB	REVISED -	STATE OF ILLINOIS DEPARTMENT OF TRANSPORTATION	TYPICAL CROSS SECTIONS	F.A. RTE.	SECTION	COUNTY	TOTAL SHEETS	SHEET NO.
		DRAWN - MLB	REVISED -				•	VERMILION	86	8
	PLOT SCALE = 40.0000 ′ / IN.	CHECKED -	REVISED -			CONTRACT NO. 70124				
	PLOT DATE = 1/27/2010	DATE - 1/06/10	REVISED -		SCALE: SHEET NO. OF SHEETS STA. TO STA.	ILLINOIS FED. AID PROJECT				