EXISTING TYPICAL CROSS SECTION (17)

(16) STA. 515+23.00 TO STA. 593+09.00 (18)
(18) STA. 617+20.00 TO STA. 627+05.61 (18)

SN 092-0189 OMISSION
STA. 520+02.50 TO STA. 520+67.50

SN 092-0034 OMISSION
STA. 621+00.40 TO STA. 624+81.00

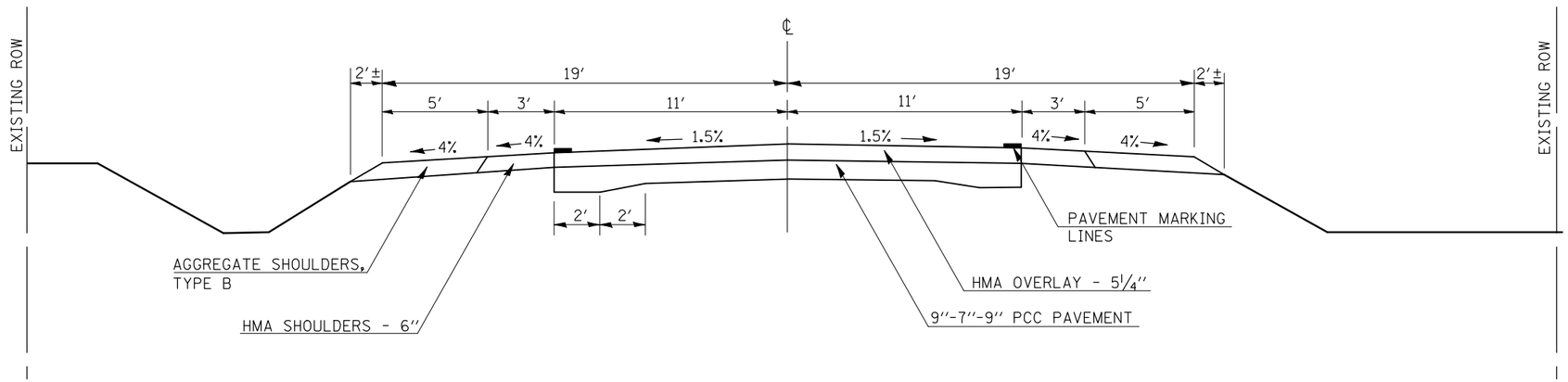

NOTE: SHOULDERS ARE A BAM MIX AND WILL NEED TO BE MILLED SEPARATELY FROM MAINLINE PAVEMENT SO THAT RAP CAN BE STOCKPILED SEPARATELY.

PROPOSED TYPICAL CROSS SECTION (17)

(16) STA. 515+23.00 TO STA. 593+09.00 (18)
(18) STA. 617+20.00 TO STA. 627+05.61 (18)

SN 092-0189 OMISSION
STA. 520+02.50 TO STA. 520+67.50

SN 092-0034 OMISSION
STA. 621+00.40 TO STA. 624+81.00

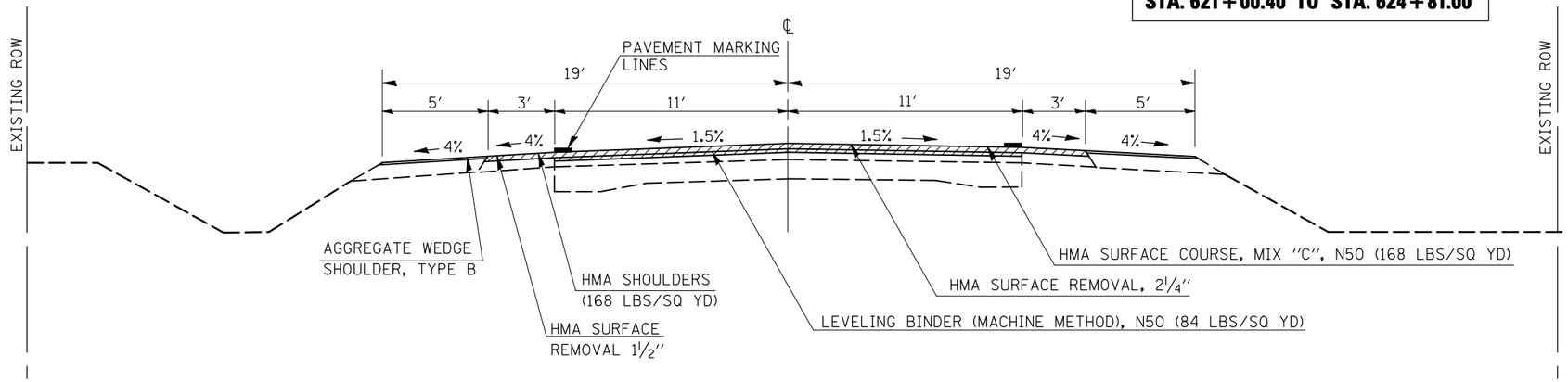

* (48-X1)RS&(48-X2,RX,RX-1)RS-1

FILE NAME = c:\pw_work\pwidot\bowerml\d0145216\d570124-sht-typical.dgn	USER NAME = bowerml	DESIGNED - MLB	REVISED -	STATE OF ILLINOIS DEPARTMENT OF TRANSPORTATION	TYPICAL CROSS SECTIONS	F.A. RTE.	SECTION	COUNTY	TOTAL SHEETS	SHEET NO.
		DRAWN - MLB	REVISED -				*	VERMILION	86	23
	PLOT SCALE = 40.0000 ' / IN.	CHECKED -	REVISED -			CONTRACT NO. 70124				
	PLOT DATE = 1/27/2010	DATE - 1/06/10	REVISED -		SCALE: SHEET NO. OF SHEETS STA. TO STA.	ILLINOIS FED. AID PROJECT				