EXISTING TYPICAL CROSS SECTION (18)

(17) STA. 593+09.00 TO STA. 617+20.00 (17)
(17) STA. 627+05.61 TO STA. 630+67.00 (19)

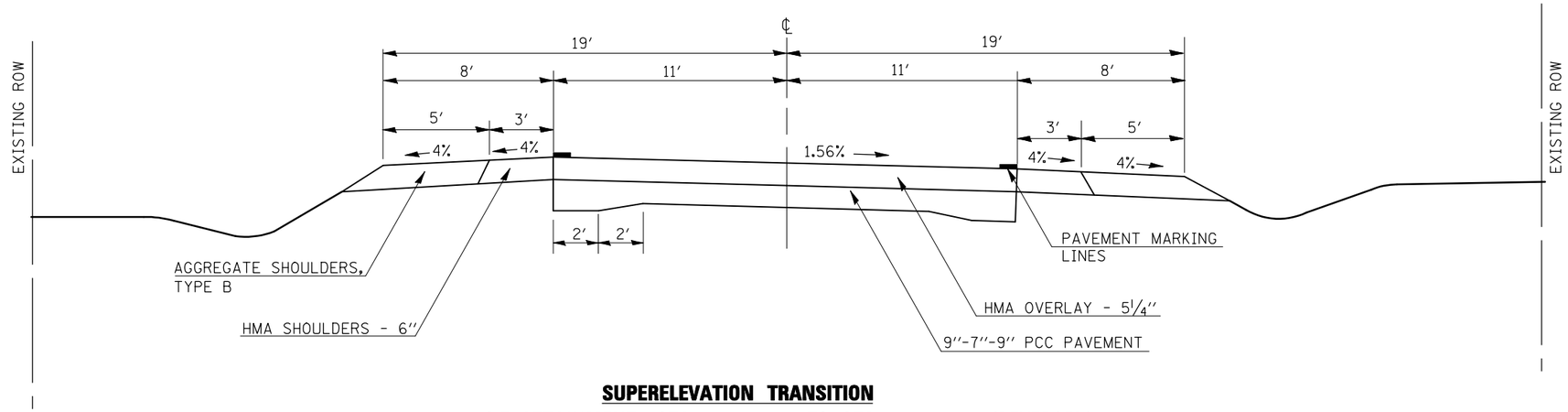

SUPERELEVATION TRANSITION

S.E. ATTAINMENT STA. 593+09.00 TO STA. 595+49.00 (REVERSED)
S.E. REMOVAL STA. 614+80.00 TO STA. 617+20.00 (REVERSED)
S.E. ATTAINMENT STA. 626+05.00 TO STA. 628+45.00

NOTE: SHOULDERS ARE A BAM MIX AND WILL NEED TO BE MILLED SEPARATELY FROM MAINLINE PAVEMENT SO THAT RAP CAN BE STOCKPILED SEPARATELY.

PROPOSED TYPICAL CROSS SECTION (18)

(17) STA. 593+09.00 TO STA. 617+20.00 (17)
(17) STA. 627+05.61 TO STA. 630+67.00 (19)

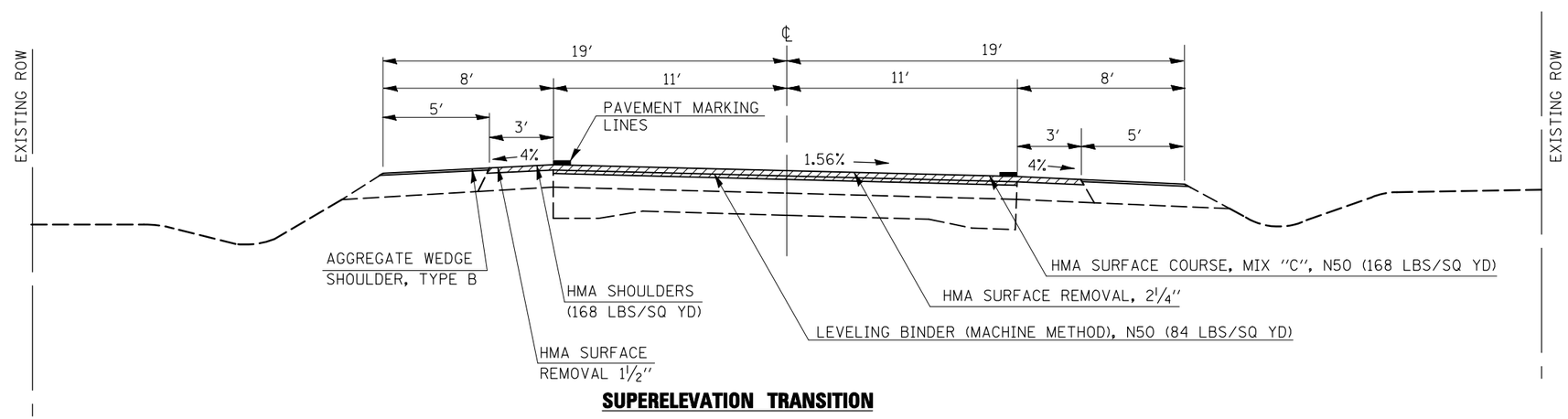

SUPERELEVATION TRANSITION

S.E. ATTAINMENT STA. 593+09.00 TO STA. 595+49.00 (REVERSED)
S.E. REMOVAL STA. 614+80.00 TO STA. 617+20.00 (REVERSED)
S.E. ATTAINMENT STA. 627+05.61 TO STA. 627+77.40

* (48-X1)RS&(48-X2,RX,RX-1)RS-1

FILE NAME = c:\pw_work\pwidot\bowerml\d0145216\d570124-sht-typical.dgn	USER NAME = bowerml	DESIGNED - MLB	REVISED -	STATE OF ILLINOIS DEPARTMENT OF TRANSPORTATION	TYPICAL CROSS SECTIONS	F.A. RTE.	SECTION	COUNTY	TOTAL SHEETS	SHEET NO.
		DRAWN - MLB	REVISED -				*	VERMILION	86	24
	PLOT SCALE = 40.0000 ′ / IN.	CHECKED -	REVISED -			CONTRACT NO. 70124				
	PLOT DATE = 1/27/2010	DATE - 1/06/10	REVISED -		SCALE: SHEET NO. OF SHEETS STA. TO STA.	ILLINOIS FED. AID PROJECT				