CONTRACT NO. 70529

F.A.P. RTE.	SECTION	COUNTY	TOTAL SHEETS	SHEET NO.
315	(102X)BR,BR-3	MCLEAN	42	12
STA.		TO STA.		
FED. ROAD DIST. NO.		ILLINOIS	FED. AID PROJECT	

PROPOSED TYPICAL SECTION (US 136)

STATION	TO	STATION
40+605.500		40+629.000
44+033.500		44+059.000

** PAVEMENT AND SHOULDER WIDTHS VARY AT INTERSECTON WITH CH 21 SEE SHEET 24

1. HOT-MIX ASPHALT SURFACE COURSE MIXTURE C, 38 mm (91 kg/sq m)
2. LEVELING BINDER (MACHINE METHOD), N50, 19 mm (46 kg/sq m) & VARIABLE
3. HOT-MIX ASPHALT SHOULDERS, 150 mm
4. SUB-BASE GRANULAR MATERIAL, TYPE A, 100 mm
5. HOT-MIX ASPHALT BASE COURSE, 270 mm
6. HOT-MIX ASPHALT BASE COURSE WIDENING 270 mm
7. AGGREGATE SHOULDERS, TYPE B
8. HOT-MIX ASPHALT SHOULDER M TON, 57 mm (137 kg/sq m)
9. HOT-MIX ASPHALT SURFACE REMOVAL, VARIABLE DEPTH (USE AS NEEDED TO ENSURE 38mm RESURFACING ACCORDING TO PROPOSED PROFILE.)

LOCATION 1 IS FROM STA. 40+500 TO STA. 40+675

LOCATION 2 IS FROM STA. 43+975 TO STA. 44+150

NOTE:
SEE SHEET 24 FOR INTERSECTION WIDENING AT LOCATION 2.

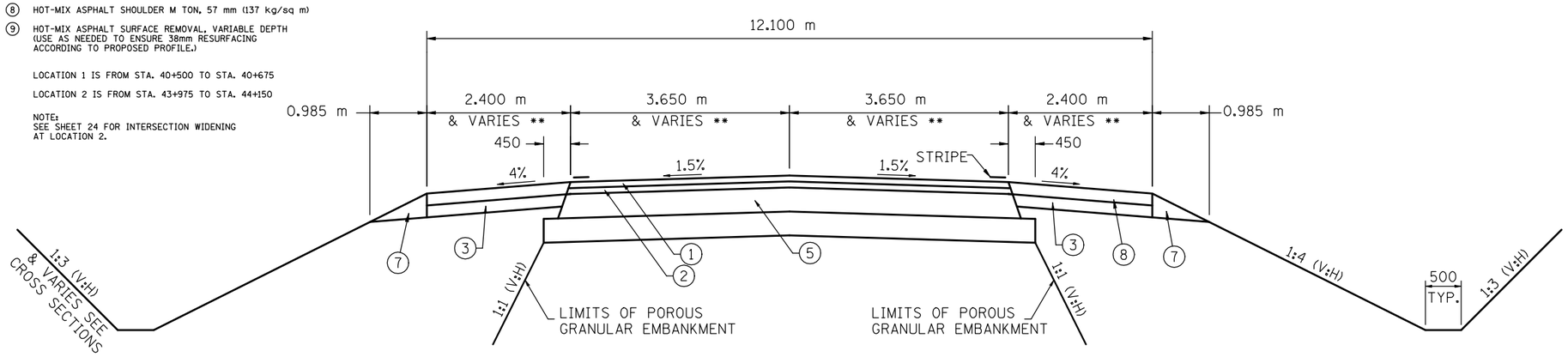

PROPOSED TYPICAL SECTION (US 136)

STATION	TO	STATION
40+500.000		40+605.500
40+629.000		40+675.000
43+975.000		44+033.500
44+059.000		44+150.000

1. HOT-MIX ASPHALT SURFACE COURSE MIXTURE C, 38 mm (91 kg/sq m)
2. LEVELING BINDER (MACHINE METHOD), N50, 19 mm (46 kg/sq m) & VARIABLE
3. HOT-MIX ASPHALT SHOULDERS, 150 mm
4. SUB-BASE GRANULAR MATERIAL, TYPE A, 100 mm
5. HOT-MIX ASPHALT BASE COURSE, 270 mm
6. HOT-MIX ASPHALT BASE COURSE WIDENING 270 mm
7. AGGREGATE SHOULDERS, TYPE B
8. HOT-MIX ASPHALT SHOULDER M TON, 57 mm (137 kg/sq m)
9. HOT-MIX ASPHALT SURFACE REMOVAL, VARIABLE DEPTH (USE AS NEEDED TO ENSURE 38mm RESURFACING ACCORDING TO PROPOSED PROFILE.)

LOCATION 1 IS FROM STA. 40+500 TO STA. 40+675

LOCATION 2 IS FROM STA. 43+975 TO STA. 44+150

NOTE:
SEE SHEET 24 FOR INTERSECTION WIDENING AT LOCATION 2.

WHERE INDICATED ON THE PLAN & PROFILE SHEETS DITCH SHALL BE LINED WITH AGGREGATE ACCORDING TO SECTION 283 OF THE STANDARD SPECIFICATIONS AND THE DETAIL ON THIS SHEET.

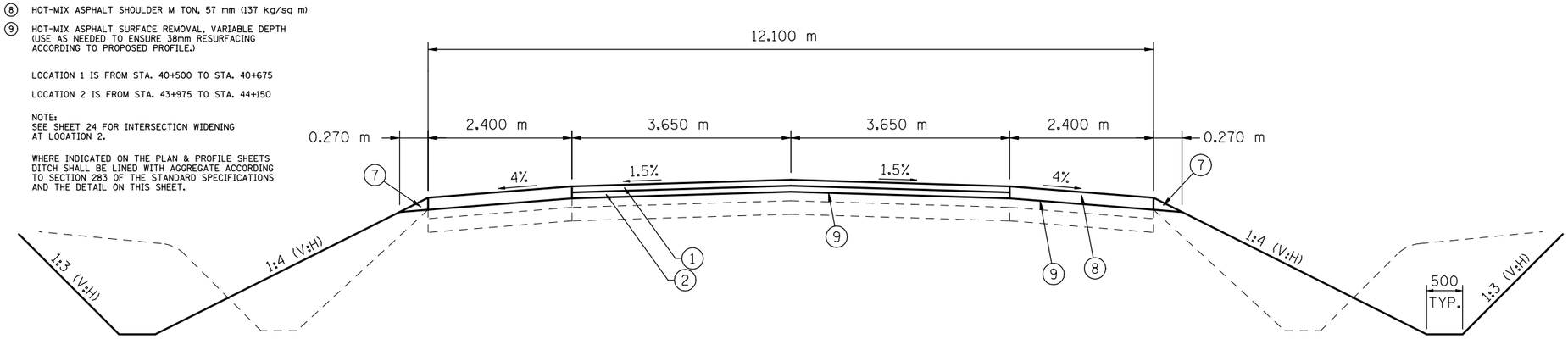

PLOT DATE = 1/28/2010
FILE NAME = c:\pw_work\pwidot\sherer_jm\d0106598\D570529-sht-typical.dgn
PLOT SCALE = 0.0486 m / IN.
USER NAME = sherer_jm