CONTRACT NO. 70529

F.A.P. RTE.	SECTION	COUNTY	TOTAL SHEETS	SHEET NO.
315	(102X)BR,BR-3	MCLEAN	42	31
STA.		TO STA.		
FED. ROAD DIST. NO.		ILLINOIS	FED. AID PROJECT	

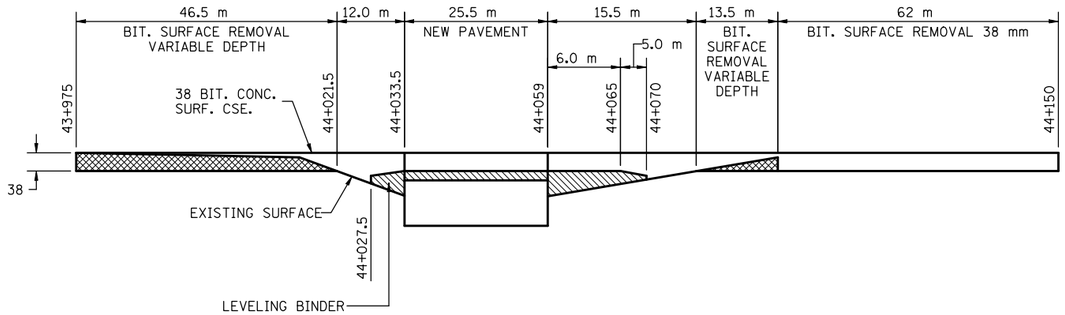

BITUMINOUS SURFACE REMOVAL AND OVERLAY DETAIL

STA. 43+975 TO STA. 44+150

NOTE: USE BITUMINOUS SURFACE REMOVAL VARIABLE DEPTH AS NEEDED TO ENSURE MIN. 38mm TOTAL THICKNESS OF RESURFACING

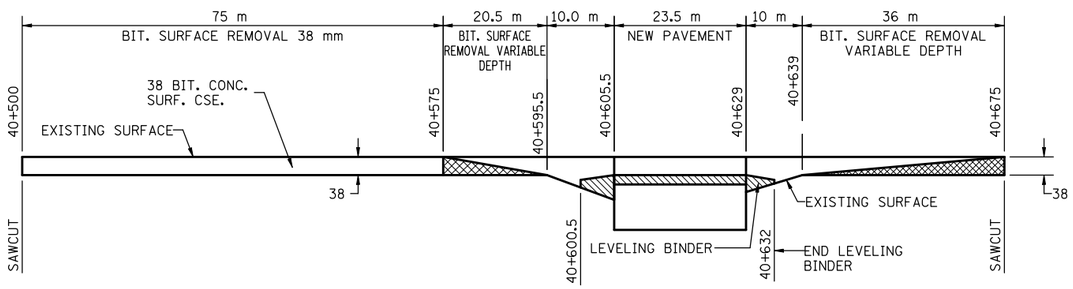

BITUMINOUS SURFACE REMOVAL AND OVERLAY DETAIL

STA. 40+500 TO STA. 40+675

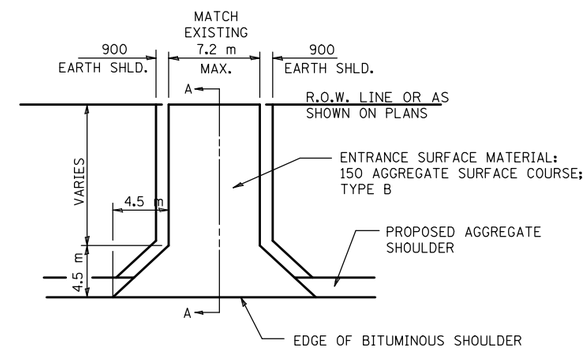

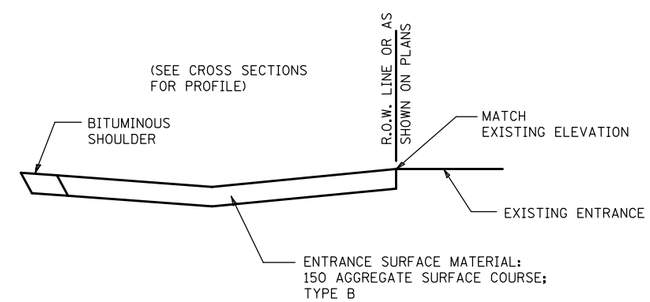

FIELD ENTRANCE DETAIL

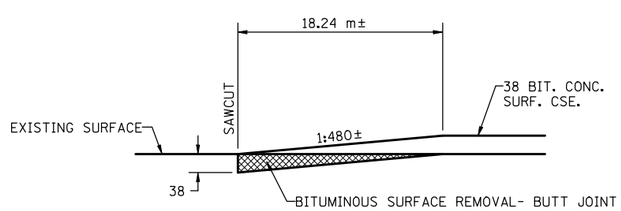

BITUMINOUS SURFACE REMOVAL- BUTT JOINT

CH 21

REVISIONS	
NAME	DATE

ILLINOIS DEPARTMENT OF TRANSPORTATION

DESIGN DETAILS

F.A.P. ROUTE 315
SECTION (102X)BR,BR-3
MCLEAN COUNTY

DRAWN BY

DATE CHECKED BY

PLOT DATE = 1/28/2010
FILE NAME = c:\pw_work\pwidot\sherer_jm\d0106598\D570529-sht-details.dgn
PLOT SCALE = 27.0000 m / IN.
USER NAME = sherer_jm