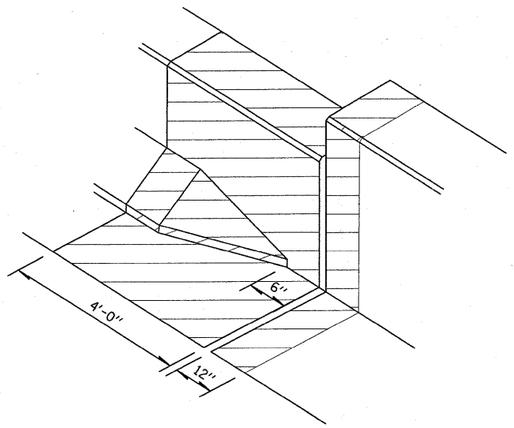

TYPICAL CONCRETE REPLACEMENT
AT EACH ABUTMENT

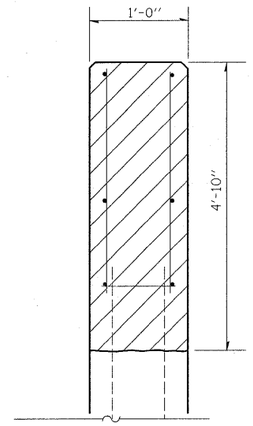

WINGWALL DETAIL

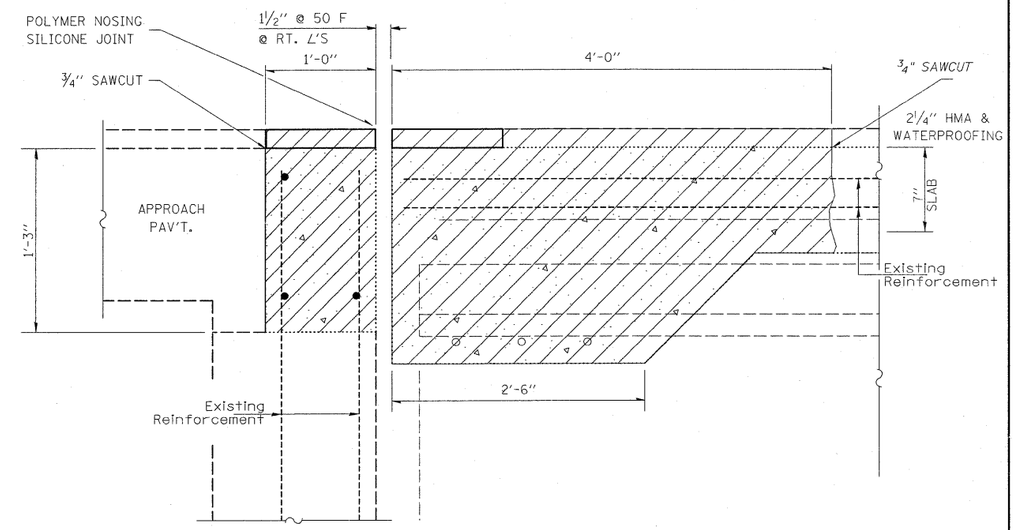

EXISTING EXPANSION JOINTS AT ABUTMENTS

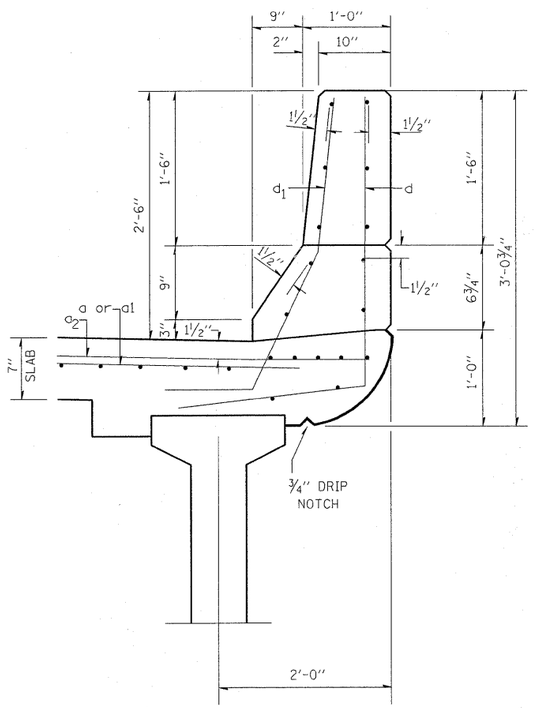

PARAPET DETAIL

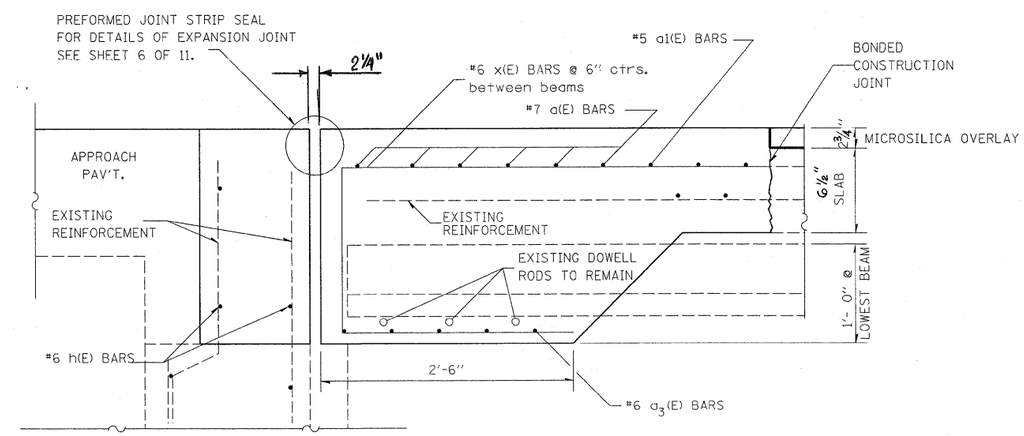

PROPOSED EXPANSION JOINTS AT ABUTMENTS

FILE NAME = c:\pw_work\PWIDOT\TEASLEYCK\d0144201\D7*****-sht-bcr.dgn	USER NAME = teasleyck	DESIGNED - ADR	REVISED -
		DRAWN - ADR	REVISED -
	PLOT SCALE = 500.0790 ' / IN.	CHECKED -	REVISED -
	PLOT DATE = 2/9/2010	DATE - 1/20/10	REVISED -

STATE OF ILLINOIS
DEPARTMENT OF TRANSPORTATION

EXPANSION JOINT DETAILS

SCALE: 20 | SHEET NO. 4 OF 11 SHEETS | STA. | TO STA.

S.B.I. RTE.	SECTION	COUNTY	TOTAL SHEETS	SHEET NO.
16	D7 BRIDGE REPAIRS 2010-2	SHELBY	16	9

CONTRACT NO. 74403

FED. ROAD DIST. NO. | ILLINOIS | FED. AID PROJECT