STATE OF ILLINOIS
DEPARTMENT OF TRANSPORTATION

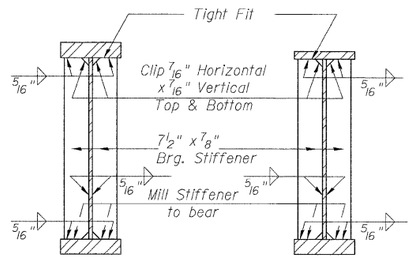

SECTION AT PIER

SECTION AT ABUTMENT

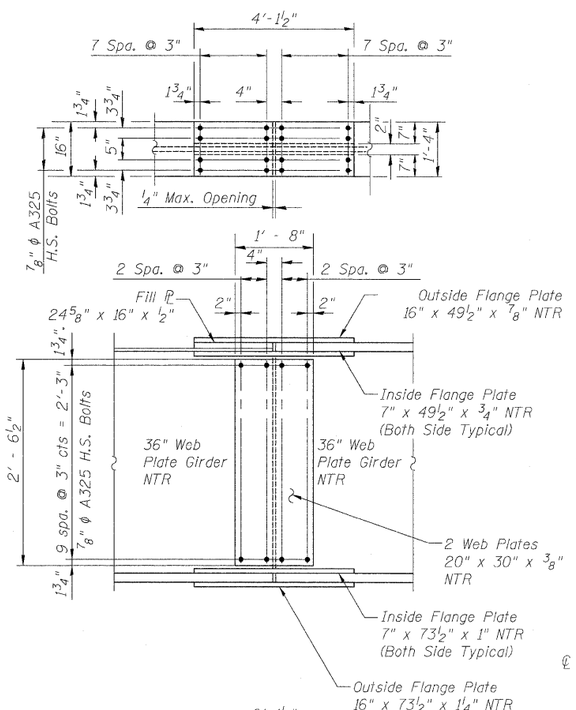

SPLICE PLATE DETAILS

16 Field Splices Required

All Splices ℄ shall be M270 Grade 50 Steel.

Load carrying components designated "NTR" shall conform to the Supplemental Requirements for Notch Toughness, Zone 2.

INTERIOR GIRDER MOMENT TABLE (Beam 7)				
		0.4 Sp. 1	Pier	0.6 Sp. 2
I_s	(in^4)	21358	24826	21358
$I_c(n)$	(in^4)	49007	53564	49007
$I_c(3n)$	(in^4)	35492	39135	35492
S_s	(in^3)	1200	1241	1200
$S_c(n)$	(in^3)	1534	3098	1534
$S_c(3n)$	(in^3)	1416	2936	1416
S_{xt}	(in^3)	64.0	85.3	64.0
DC1	(k/')	1.084	1.084	1.084
M_{DC1}	('k)	586	1128	598
DC2	(k/')	0.186	0.186	0.186
M_{DC2}	('k)	111	204	113
DW	(k/')	0.306	0.306	0.306
M_{DW}	('k)	182	335	185
M_{LL+Imp}	('k)	1236	1296	1246
M_u (Strength I)	('k)	3307.3	4435.5	3346.8
M_{bt}	('k)	66.6	57.9	59.0
f_s DC1	(ksi)	5.86	10.91	5.98
f_s DC2	(ksi)	0.94	0.83	0.96
f_s DW	(ksi)	1.54	1.37	1.57
f_s 1.3(LL+I)	(ksi)	12.57	6.53	12.67
f_t	(ksi)	12.49	8.15	11.06
f_s (Service II)	(ksi)	20.91	19.64	21.18
f_s (Total)(Strength I)	(ksi)	27.73	25.52	28.08
F_{cr} (Service II)	(ksi)	30.30	25.79	29.49
V_f	(k)	46.38	46.38	46.38
F_{cr}	(ksi)	72.87	114.09	83.27

INTERIOR GIRDER REACTION TABLE (BEAM 7) HL93 Loading				
		W. Abut.	Pier	E. Abut.
R_{DC1}	(k)	36.5	123.8	36.5
R_{DC2}	(k)	6.4	22.5	6.5
R_{DW}	(k)	10.6	37.0	10.7
R_{LL+Imp}	(k)	80.7	136.7	77.9
R_{Total}	(k)	134.3	319.9	131.5

I_s, S_s: Non-composite moment of inertia and section modulus of the steel section used for computing f_s (Total-Strength I, and Service II) due to non-composite dead loads ($in.^4$ and $in.^3$).

$I_c(n)$, $S_c(n)$: Composite moment of inertia and section modulus of the steel and deck based upon the modular ratio, "n", used for computing f_s (Total-Strength I, and Service II) due to short-term composite live loads ($in.^4$ and $in.^3$).

$I_c(3n)$, $S_c(3n)$: Composite moment of inertia and section modulus of the steel and deck based upon 3 times the modular ratio, "3n", used for computing f_s (Total-Strength I, and Service II) due to long-term composite (superimposed) dead loads ($in.^4$ and $in.^3$).

S_{xt}: Section modulus about the major axis of section to the controlling flange, tension or compression, taken as yield moment with respect to the controlling flange over the yield strength of the controlling flange ($in.^3$).

DC1: Un-factored non-composite dead load (kips/ft.).

M_{DC1}: Un-factored moment due to non-composite dead load (kip-ft.).

DC2: Un-factored long-term composite (superimposed excluding future wearing surface) dead load (kips/ft.).

M_{DC2}: Un-factored moment due to long-term composite (superimposed excluding future wearing surface) dead load (kip-ft.).

DW: Un-factored long-term composite (superimposed future wearing surface only) dead load (kips/ft.).

M_{DW}: Un-factored moment due to long-term composite (superimposed future wearing surface only) dead load (kip-ft.).

M_{LL+Imp}: Un-factored live load moment plus dynamic load allowance (impact)(kip-ft.).

M_u (Strength I): Factored design moment (kip-ft.).
$1.25\ (M_{DC1} + M_{DC2}) + 1.5\ M_{DW} + 1.75\ M_{LL+Imp}$

M_{bt}: Factored lateral bending moment for controlling flange plate (kip-ft.).

f_t: Factored calculated normal stress at edge of flange for controlling flange plate due to lateral bending (ksi.).

f_s (Service II): Sum of stresses as computed from the moments below (ksi).
$M_{DC1} + M_{DC2} + M_{DW} + 1.3\ M_{LL+Imp}$

f_s (Total)(Strength I): Sum of stresses as computed from the moments below on non-compact section (ksi).
$1.25\ (M_{DC1} + M_{DC2}) + 1.5\ M_{DW} + 1.75\ M_{LL+Imp}$

F_{cr} (Service II): Critical flange stress at overload computed according to Article 6.10.4.2 (ksi).

F_{cr}: Critical flange stress computed according to Article 6.10.7 or 6.10.8 (ksi).

V_f: Factored shear range computed according to Article 6.10.10.

Note:
M LL and R LL include the effects of centrifugal force and superelevation.

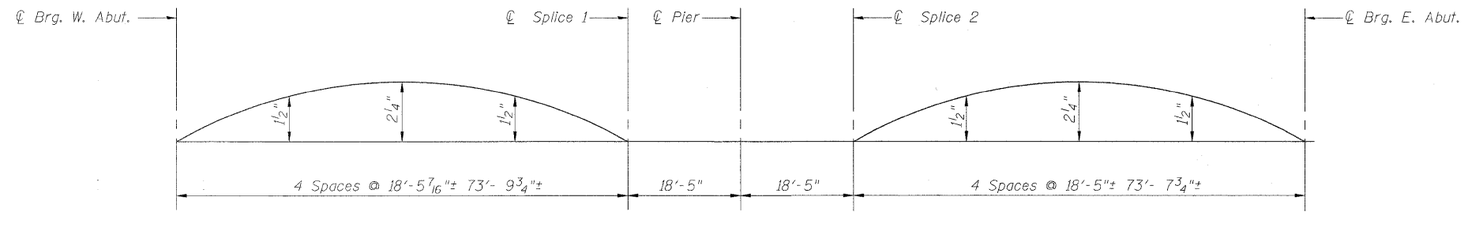

CAMBER DIAGRAM

(See Sheet 14 of 34 for Top of Web Elevations)

DESIGNED	JPM
CHECKED	CCS
DRAWN	MD
CHECKED	JPM, CCS

9-28-09

MACTEC

GIRDER DETAILS II
STRUCTURE NO. 067-0042

SHEET NO.15	F.A.P RTE.	SECTION	COUNTY	TOTAL SHEETS	SHEET NO.
34 SHEETS	809	67-1HBR	Monroe	144	79
			CONTRACT NO. 76977		
	FED. ROAD DIST. NO. 7	ILLINOIS	FED. AID PROJECT		