Standard: ST 101B

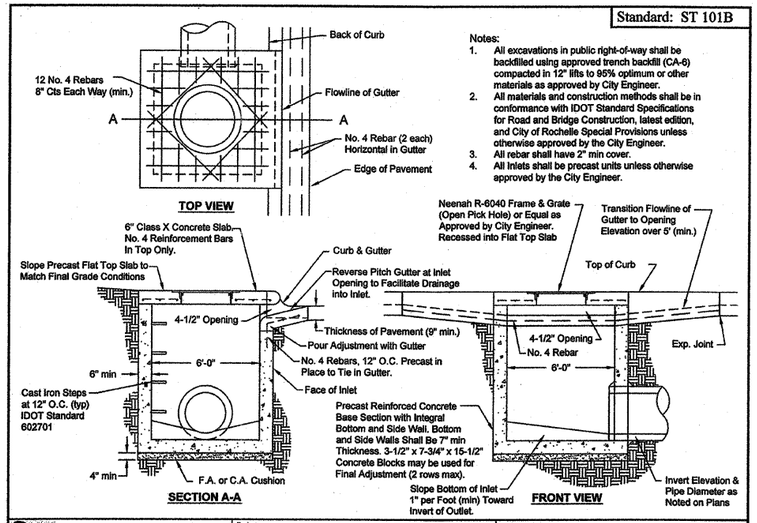

Notes:

1. All excavations in public right-of-way shall be backfilled using approved trench backfill (CA-6) compacted in 12" lifts to 95% optimum or other materials as approved by City Engineer.
2. All materials and construction methods shall be in conformance with IDOT Standard Specifications for Road and Bridge Construction, latest edition, and City of Rochelle Special Provisions unless otherwise approved by the City Engineer.
3. All rebar shall have 2" min cover.
4. All Inlets shall be precast units unless otherwise approved by the City Engineer.

City of Rochelle
Engineering Division
417 N. 6th St. Rochelle, IL 61068

Project: City of Rochelle Standard Details

Inlet Special No. 4 (6' x 6')

Drawn by: CW	Date: 10/16/09	Scale: N.T.S.
Checked by: ST	Revised:	Sheet: 1 of 1

Standard: ST 101

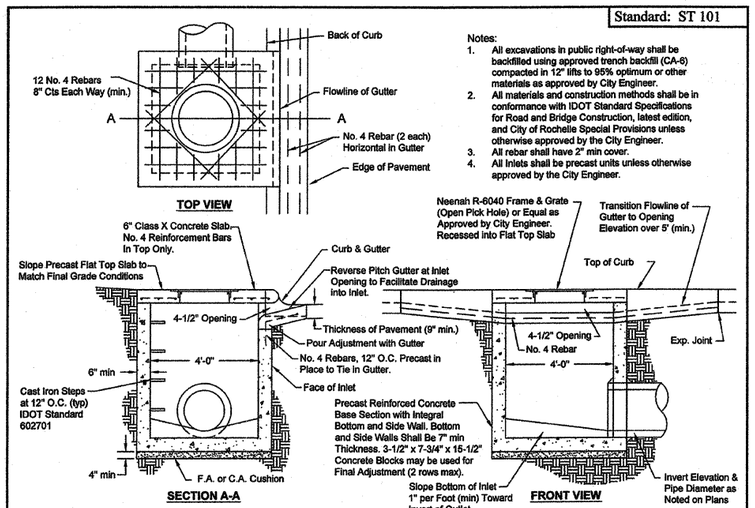

Notes:

1. All excavations in public right-of-way shall be backfilled using approved trench backfill (CA-6) compacted in 12" lifts to 95% optimum or other materials as approved by City Engineer.
2. All materials and construction methods shall be in conformance with IDOT Standard Specifications for Road and Bridge Construction, latest edition, and City of Rochelle Special Provisions unless otherwise approved by the City Engineer.
3. All rebar shall have 2" min cover.
4. All Inlets shall be precast units unless otherwise approved by the City Engineer.

City of Rochelle
Engineering Division
417 N. 6th St. Rochelle, IL 61068

Project: City of Rochelle Standard Details

Inlet Special No. 3 (4' x 4')

Drawn by: CW	Date: 1/30/09	Scale: N.T.S.
Checked by: ST	Revised:	Sheet: 1 of 1

ROUGH GROOVED SURFACE SIGN

ILLINOIS STANDARD W8-I107

SIGN PANEL TYPE 1

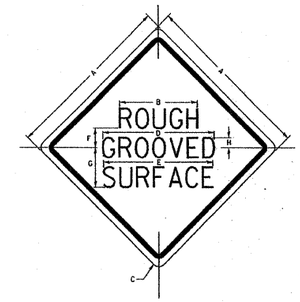

COLOR: LEGEND AND BORDER - BLACK NON-REFLECTIVE
BACKGROUND - ORANGE REFLECTORIZED

SIGN SIZE	DIMENSIONS							
	A	B	C	D	E	F	G	H
1200x1200 (48x48)	1200 (48.0)	600 (24.1)	75 (3.0)	850 (34.0)	825 (33.0)	150 (6.0)	325 (13.0)	88 (3.5)

SIGN SIZE	SERIES LINES			MARGIN	BORDER	BLANK STD.
	1	2	3			
1200x1200 (48x48)	7C	7C	7C	20 (0.8)	30 (1.2)	B4-48D

ALL DIMENSIONS IN INCHES.

GENERAL NOTES

SIGN PANELS AND FACE MATERIALS SHALL BE ACCORDING TO SECTION 720 OF THE STANDARD SPECIFICATIONS

METAL POSTS SHALL BE IN ACCORDANCE WITH STD. 720011.

ALL MOUNTING HARDWARE SHALL BE ALUMINUM, STAINLESS STEEL, ZINC OR CADMIUM PLATED STEEL AND SHALL BE INCLUDED TO THE COST OF THE INSTALLATION.

ALL DIMENSIONS ARE IN MILLIMETERS (INCHES) UNLESS OTHERWISE NOTED.

REVISED - 1-09-08
REVISED -
REVISED -
REVISED -
PLOT DATE = Mon Oct 27 10:02:2008

REGION 2 / DISTRICT 2 STANDARD

SCALE: 1.0000 " / IN. | SHEET NO. OF SHEETS | STA. TO STA.

F.A.P. RTE. | SECTION | COUNTY | TOTAL SHEETS | SHEET NO.
CONTRACT NO.
ITEM NONE-DIST. NO. | ILLINOIS FED. AID PROJECT

ROUGH GROOVED SURFACE SIGN 91.2

City of Rochelle
Engineering Division
417 N. 6th St. Rochelle, IL 61068

PROJECT:

2009 ARRA Stimulus Funds
City of Rochelle Street Rehabilitation/Resurfacing Project
Lincoln Hwy/Washington St - 1st Av to 5th Av incl 4th Av
Section #09-00105-00-RS

REVISIONS			
REV	DESCRIPTION	DATE	APPROVED

DRAWING: **Details**

DRAWN BY: CW	SCALE	SHEET
CHECKED BY: ST	HORZ SCALE: NA	**9 of 10**
DATE: 3/22/10	VERT SCALE: NA	