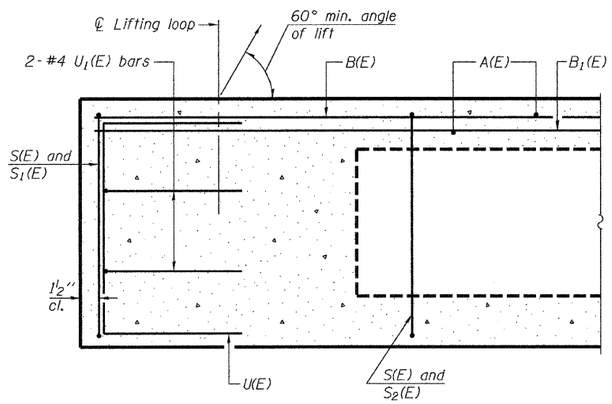

SECTION C-C

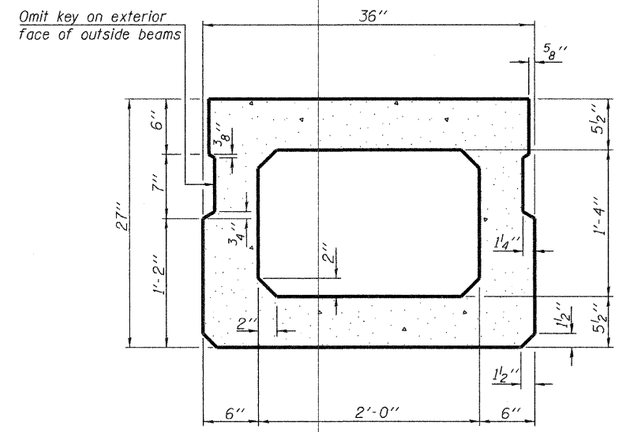

SECTION A-A

(Showing dimensions)

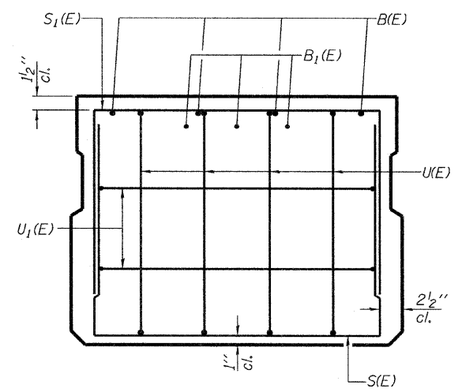

VIEW B-B

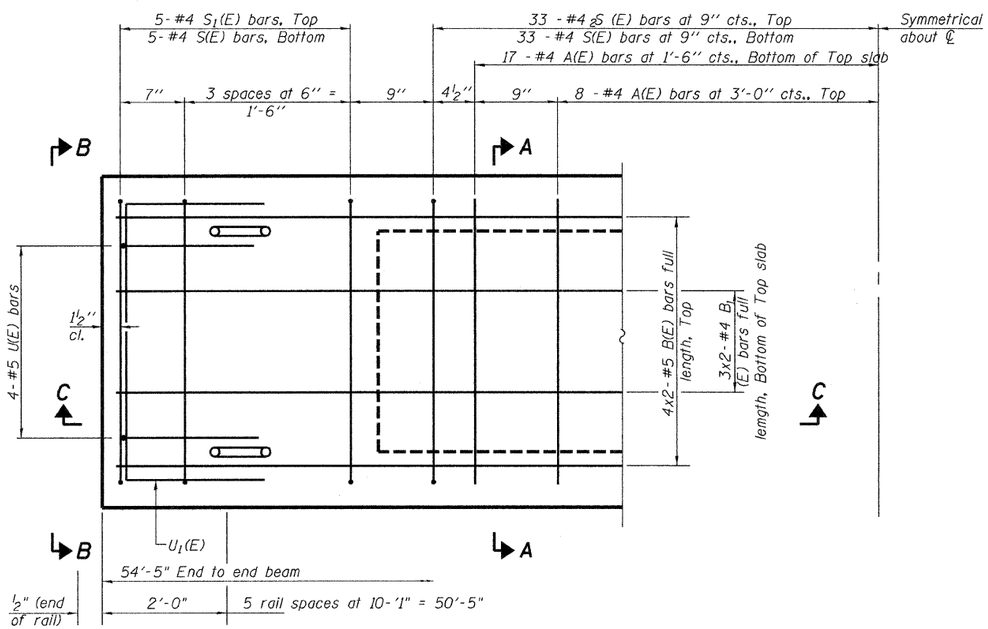

PLAN VIEW

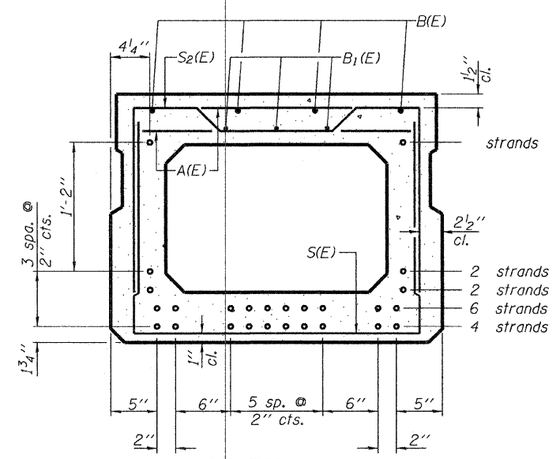

SECTION A-A

(Showing reinforcement and permissible strand locations)

Note: Place the number of strands specified in each row symmetrically about the centerline of beam in the permissible strand locations shown.

BAR LIST
ONE BEAM ONLY

(For information only)

Bar	No.	Size	Length	Shape
A(E)	48	#4	2'-7"	—
B(E)	8	#5	28'-1"	—
B_1(E)	6	#4	27'-10"	—
S(E)	65	#4	6'-5"	⊔
S_1(E)	10	#4	5'-11"	⊓
S_2(E)	65	#4	6'-2"	⊓
U(E)	8	#5	4'-6"	⊏
U_1(E)	4	#4	5'-0"	⊓

Note: See sheet 3 of 7 for additional details and Bill of Material.

Note: Spacing of S(E) and S_2(E) bars may be adjusted up to 4" in the immediate area of the transverse tie diaphragms to miss the block outs for the transverse ties.

Min BAR LAP

#4 - 1'-8"
#5 - 2'-2"

27" X 36" PPC DECK BEAMS

SUPERSTRUCTURE
TR 427 OVER FAYETTE CREEK

DATE: 11-03-09 DRAWN BY: JEH CHECKED BY: DF

SHEET NO. 2 OF 7 SHEETS	F.A. RTE.	SECTION	COUNTY	TOTAL SHEETS	SHEET NO.
	-	01-03130-00-BR	VERMILION	17	6
		SN 092-3493	CONTRACT NO. 91366		
	FED. ROAD DIST. NO. _	ILLINOIS	FED. AID PROJECT		

ESI CONSULTANTS, LTD
753 WINDSOR ROAD
CHARLESTON, IL 61920
(217) 345-1300
WWW.ESICONSULTANTSLTD.COM
ILLINOIS DEPARTMENT OF PROFESSIONAL REGULATION REGISTRATION 184-003885

PD-2736-0 5-16-08

PRINTED DATE: 11/19/2009
FILE NAME = N:\PROJECTS\Vermilion County, of\TR 427 over Fayette Creek\CADD\Drawings\Sheets\06SUPER\VermCo_TR427.dgn