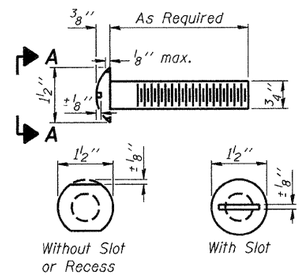

VIEW A-A ROUND HEAD BOLT

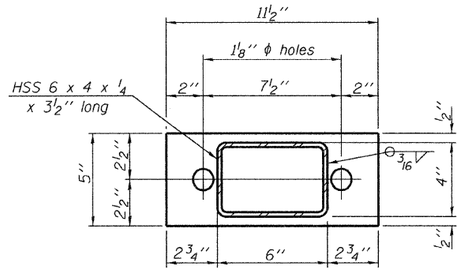

PL 1/2" x 11 1/2" x 5"

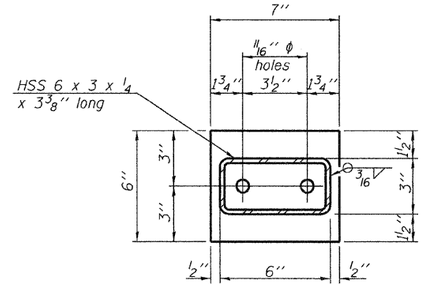

PL 1/2" x 7" x 6"

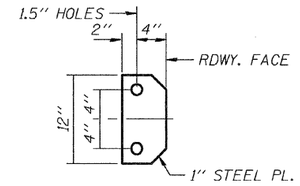

VIEW D-D

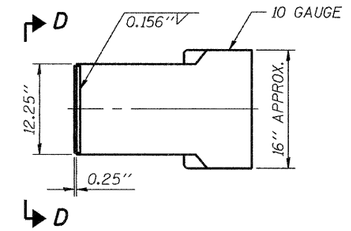

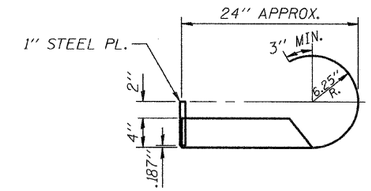

CURLED END SECTION DETAILS

4 REQUIRED - COST INCLUDED IN "STEEL RAILING, TYPE S-1"

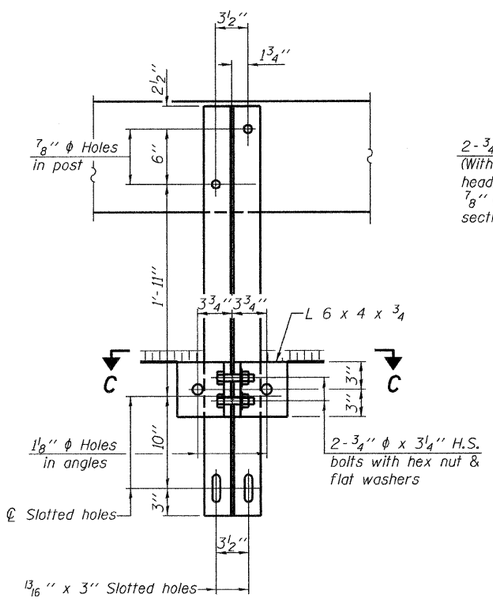

SECTION B-B

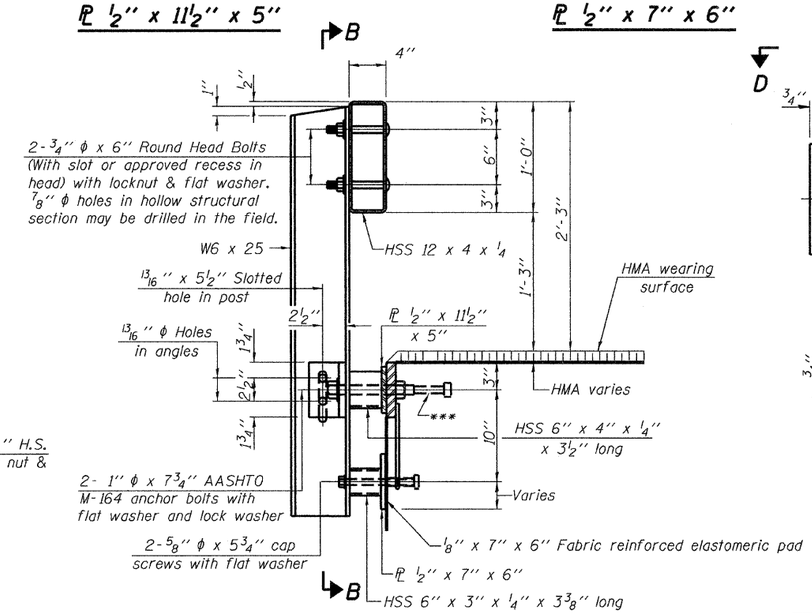

SECTION AT RAILING POST

**Whenever the lower insert assemblies interfere with strand locations, the #3 bars shall be cut and adjusted in order to allow raising or lowering of the lower inserts. Maximum adjustment not to exceed 1/2".

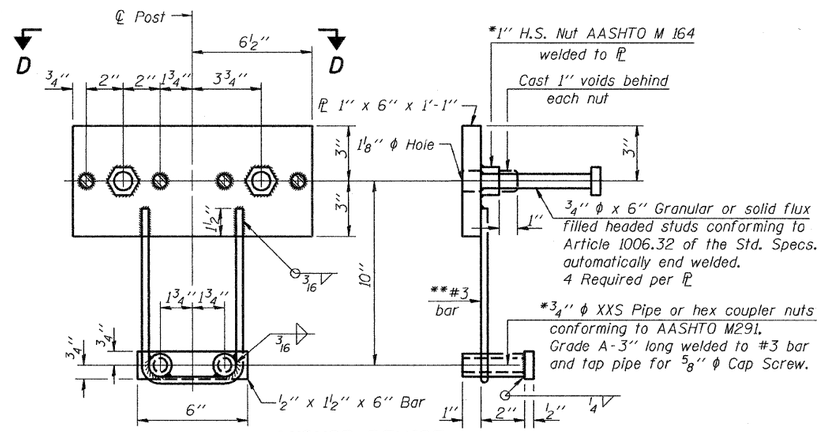

ANCHOR DEVICE

*Threaded areas shall be plugged or blocked off during casting of beam.

Notes:

All field drilled holes shall be coated with an approved zinc rich paint before erection.

For multi-span bridges, sufficient 1/4" x 6" x 1'-2" galvanized steel shims shall be provided to align rail between adjacent spans. Cost included with Steel Railing, Type S-1.

All steel rail elements shall be galvanized according to Article 509.05 of the Standard Specifications.

***The studs of the anchor devices shall be placed below the top reinforcement bars and the outermost longitudinal reinforcement bar shall be placed directly above the studs of the rail post anchor device.

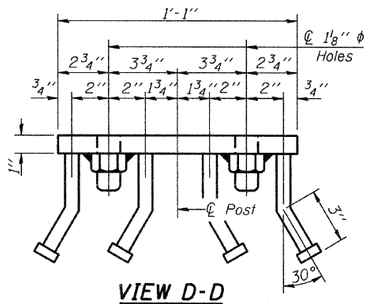

VIEW D-D

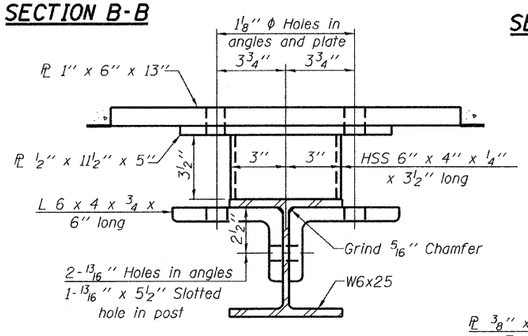

SECTION C-C

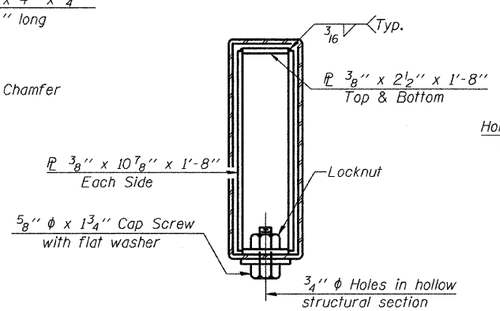

SECTIONS AT RAIL SPLICE

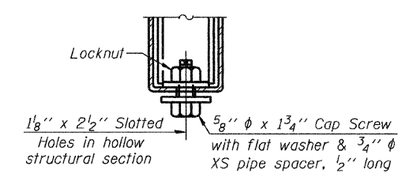

RAIL SPLICE CONNECTION AT EXPANSION JT.

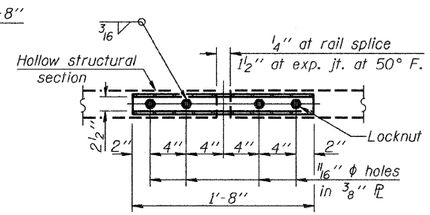

PLAN-BOTTOM SPLICE PL TYPICAL

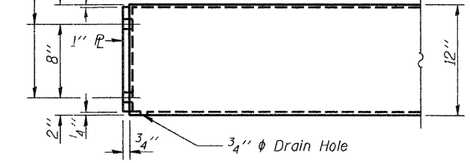

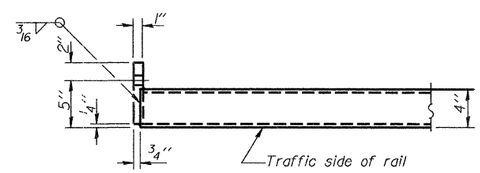

END OF RAIL DETAILS

BILL OF MATERIAL

Item	Unit	Quantity
Steel Railing, Type S-1	Foot	109

ESI CONSULTANTS, LTD
733 WINDSOR ROAD
CHARLESTON, IL 61920
(217) 345-1836
WWW.ESICONSULTANTS.LTD.COM
ILLINOIS DEPARTMENT OF PROFESSIONAL REGULATION REGISTRATION #184-003885

R-23A 5-16-08 (10'-9" Maximum Post Spacing)

STEEL RAILING, TYPE S-1
TR 427 OVER FAYETTE CREEK

DATE: 11-03-09 DRAWN BY: JEH CHECKED BY: DF

SHEET NO. 4 OF 7 SHEETS	F.A. RTE.	SECTION	COUNTY	TOTAL SHEETS	SHEET NO.
	-	01-03130-00-BR	VERMILION	17	8
		SN 092-3493	CONTRACT NO. 91366		
	FED. ROAD DIST. NO. _	ILLINOIS	FED. AID PROJECT		

PRINTED DATE: 11/9/2009
FILE NAME: = IN PROJECTS\Vermilion County of\TR 427 over Fayette Creek\0600\Drawings\Sheets\08_RAIL_VermCo_TR427.dgn