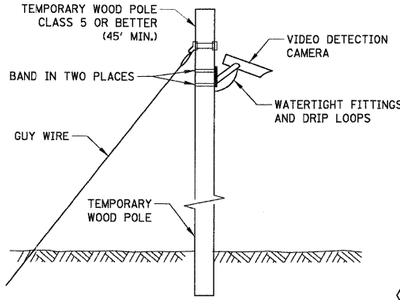

TEMPORARY VIDEO DETECTION MOUNTING DETAIL
(NOT TO SCALE)

EXISTING EQUIPMENT TO BE REMOVED LEGEND

"E"	EXISTING SIGNAL HEAD TO BE REMOVED
"E"	EXISTING SERVICE INSTALLATION TO BE REMOVED
"E"	EXISTING SIGNAL POST AND FOUNDATION TO BE REMOVED
"E"	EXISTING ALUMINUM MAST ARM POLE AND FOUNDATION TO BE REMOVED
"E"	EXISTING CONTROLLER AND FOUNDATION TO BE REMOVED
"E"	EXISTING HANDHOLE TO BE REMOVED
"E"	EXISTING PEDESTRIAN SIGNAL HEAD TO BE REMOVED
"E"	EXISTING PEDESTRIAN PUSHBUTTON TO BE REMOVED
"E"	EMERGENCY VEHICLE LIGHT DETECTOR TO BE REMOVED
"E"	CONFIRMATION BEACON TO BE REMOVED
"E"	EXISTING HEAVY-DUTY HANDHOLE TO BE REMOVED
"E"	EXISTING STEEL MAST ARM POLE AND FOUNDATION TO BE REMOVED

TEMPORARY TRAFFIC SIGNAL LEGEND

	TEMPORARY TRAFFIC SIGNAL HEAD SPAN WIRE MOUNTED ORIGINAL LOCATION
	TEMPORARY TRAFFIC SIGNAL HEAD SPAN WIRE MOUNTED SECONDARY LOCATION
	TEMPORARY WOOD POLE (CLASS 5 OR BETTER) 45 FOOT (13.7m) MINIMUM
	DOWN GUY
	TEMPORARY CONTROLLER CABINET
	TEMPORARY SPAN WIRE, TETHER WIRE, AND CABLE
	TEMPORARY SERVICE INSTALLATION
	TEMPORARY PEDESTRIAN SIGNAL HEAD, BRACKET MOUNTED
	TEMPORARY RADIO INTERCONNECT
	MACHINE VISION PROCESSOR
	PEDESTRIAN PUSHBUTTON DETECTOR
	EMERGENCY VEHICLE LIGHT DETECTOR
	CONFIRMATION BEACON
	VEHICLE DETECTOR, INDUCTION LOOP
UD	UNIT DUCT
CT	COMMON TRENCH
	G.S. CONDUIT IN TRENCH (T) OR PUSHED (P)
	HANDHOLE
	HEAVY DUTY HANDHOLE
"R"	RELOCATE
"A"	ABANDON
	DETECTION ZONE

N

20 0 10 20 30
SCALE IN FEET

CONSTRUCTION NOTES:

1. RELOCATE EXISTING LIGHT DETECTORS AND CONFIRMATION BEACON TO THE NEW MAST ARMS AND POST.
2. RELOCATE EXISTING LIGHT DETECTOR AMPLIFIER TO NEW CONTROLLER CABINET.
3. UTILIZE EXISTING ADVANCED DETECTOR AND CONFIRMATION BEACON WITH TEMPORARY TRAFFIC SIGNAL INSTALLATION.
4. UTILIZED EXISTING TRAFFIC SIGNAL HEAD FOR TEMPORARY TRAFFIC SIGNAL INSTALLATION.

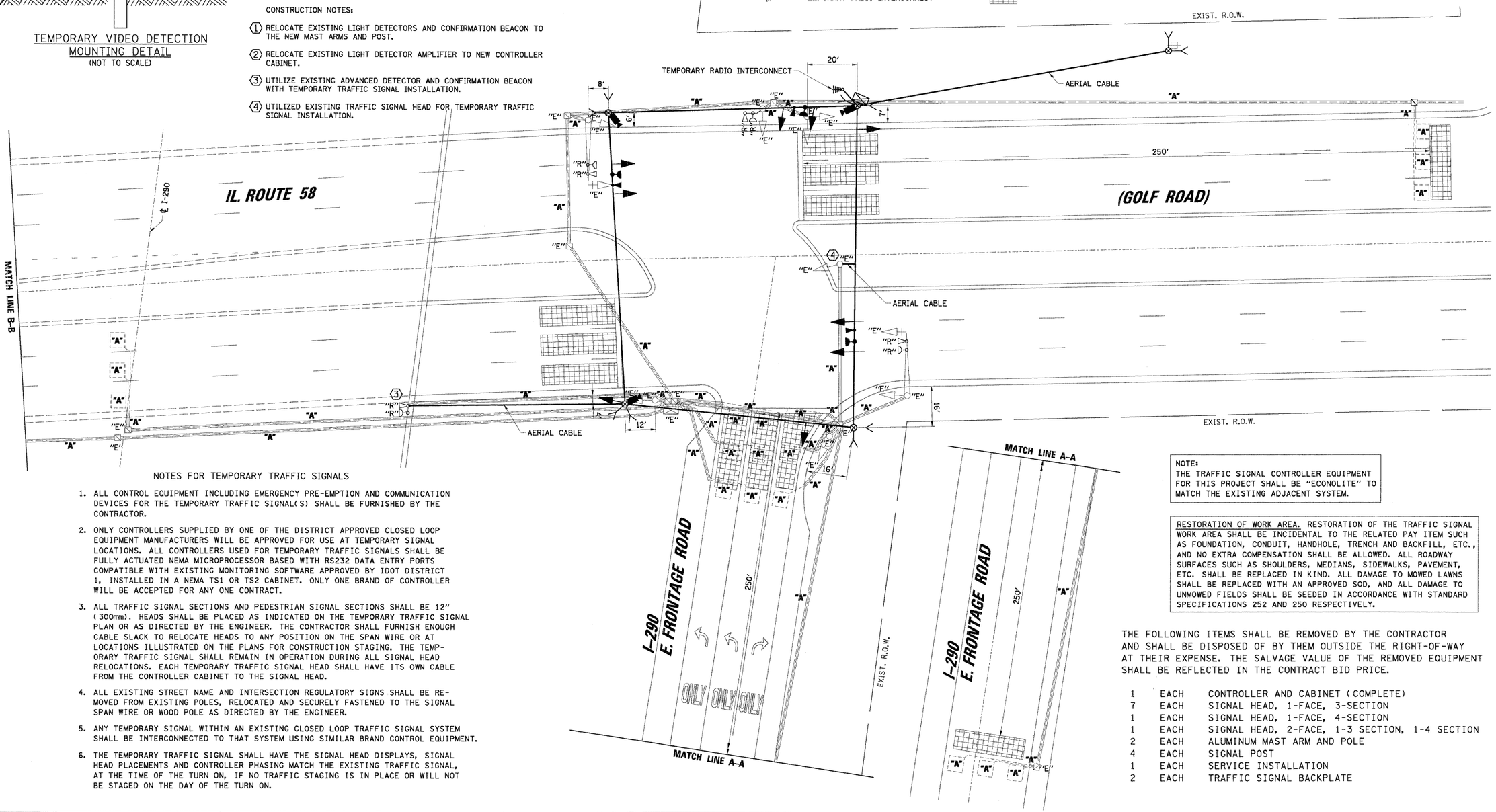

NOTES FOR TEMPORARY TRAFFIC SIGNALS

1. ALL CONTROL EQUIPMENT INCLUDING EMERGENCY PRE-EMPTION AND COMMUNICATION DEVICES FOR THE TEMPORARY TRAFFIC SIGNAL(S) SHALL BE FURNISHED BY THE CONTRACTOR.
2. ONLY CONTROLLERS SUPPLIED BY ONE OF THE DISTRICT APPROVED CLOSED LOOP EQUIPMENT MANUFACTURERS WILL BE APPROVED FOR USE AT TEMPORARY SIGNAL LOCATIONS. ALL CONTROLLERS USED FOR TEMPORARY TRAFFIC SIGNALS SHALL BE FULLY ACTUATED NEMA MICROPROCESSOR BASED WITH RS232 DATA ENTRY PORTS COMPATIBLE WITH EXISTING MONITORING SOFTWARE APPROVED BY IDOT DISTRICT 1, INSTALLED IN A NEMA TS1 OR TS2 CABINET. ONLY ONE BRAND OF CONTROLLER WILL BE ACCEPTED FOR ANY ONE CONTRACT.
3. ALL TRAFFIC SIGNAL SECTIONS AND PEDESTRIAN SIGNAL SECTIONS SHALL BE 12" (300mm). HEADS SHALL BE PLACED AS INDICATED ON THE TEMPORARY TRAFFIC SIGNAL PLAN OR AS DIRECTED BY THE ENGINEER. THE CONTRACTOR SHALL FURNISH ENOUGH CABLE SLACK TO RELOCATE HEADS TO ANY POSITION ON THE SPAN WIRE OR AT LOCATIONS ILLUSTRATED ON THE PLANS FOR CONSTRUCTION STAGING. THE TEMPORARY TRAFFIC SIGNAL SHALL REMAIN IN OPERATION DURING ALL SIGNAL HEAD RELOCATIONS. EACH TEMPORARY TRAFFIC SIGNAL HEAD SHALL HAVE ITS OWN CABLE FROM THE CONTROLLER CABINET TO THE SIGNAL HEAD.
4. ALL EXISTING STREET NAME AND INTERSECTION REGULATORY SIGNS SHALL BE REMOVED FROM EXISTING POLES, RELOCATED AND SECURELY FASTENED TO THE SIGNAL SPAN WIRE OR WOOD POLE AS DIRECTED BY THE ENGINEER.
5. ANY TEMPORARY SIGNAL WITHIN AN EXISTING CLOSED LOOP TRAFFIC SIGNAL SYSTEM SHALL BE INTERCONNECTED TO THAT SYSTEM USING SIMILAR BRAND CONTROL EQUIPMENT.
6. THE TEMPORARY TRAFFIC SIGNAL SHALL HAVE THE SIGNAL HEAD DISPLAYS, SIGNAL HEAD PLACEMENTS AND CONTROLLER PHASING MATCH THE EXISTING TRAFFIC SIGNAL, AT THE TIME OF THE TURN ON, IF NO TRAFFIC STAGING IS IN PLACE OR WILL NOT BE STAGED ON THE DAY OF THE TURN ON.

NOTE:
THE TRAFFIC SIGNAL CONTROLLER EQUIPMENT FOR THIS PROJECT SHALL BE "ECONOLITE" TO MATCH THE EXISTING ADJACENT SYSTEM.

RESTORATION OF WORK AREA. RESTORATION OF THE TRAFFIC SIGNAL WORK AREA SHALL BE INCIDENTAL TO THE RELATED PAY ITEM SUCH AS FOUNDATION, CONDUIT, HANDHOLE, TRENCH AND BACKFILL, ETC., AND NO EXTRA COMPENSATION SHALL BE ALLOWED. ALL ROADWAY SURFACES SUCH AS SHOULDERS, MEDIANS, SIDEWALKS, PAVEMENT, ETC. SHALL BE REPLACED IN KIND. ALL DAMAGE TO MOWED LAWNS SHALL BE REPLACED WITH AN APPROVED SOD, AND ALL DAMAGE TO UNMOWED FIELDS SHALL BE SEEDED IN ACCORDANCE WITH STANDARD SPECIFICATIONS 252 AND 250 RESPECTIVELY.

THE FOLLOWING ITEMS SHALL BE REMOVED BY THE CONTRACTOR AND SHALL BE DISPOSED OF BY THEM OUTSIDE THE RIGHT-OF-WAY AT THEIR EXPENSE. THE SALVAGE VALUE OF THE REMOVED EQUIPMENT SHALL BE REFLECTED IN THE CONTRACT BID PRICE.

1	EACH	CONTROLLER AND CABINET (COMPLETE)
7	EACH	SIGNAL HEAD, 1-FACE, 3-SECTION
1	EACH	SIGNAL HEAD, 1-FACE, 4-SECTION
1	EACH	SIGNAL HEAD, 2-FACE, 1-3 SECTION, 1-4 SECTION
2	EACH	ALUMINUM MAST ARM AND POLE
4	EACH	SIGNAL POST
1	EACH	SERVICE INSTALLATION
2	EACH	TRAFFIC SIGNAL BACKPLATE

CHRISTOPHER B. BURKE ENGINEERING LTD.
9575 West Higgins Road, Suite 600
Rosemont, Illinois 60018
(847) 823-0500

PLAN — NOTE BOOK NO. — SURVEYED — PLOTTED — ALIGNMENT CHECKED — R.O.W. CHECKED — R.O.W. FILE NAME — DATE — BY

PROFILE — NOTE BOOK NO. — SURVEYED — PLOTTED — GRADES CHECKED — B.M. NOTED — STRUCTURE NOTATNS CHKD — DATE — BY

N:\Files\0080240\Task 5 - EE Northwest Cook Safety\Task W - IL58 @ I-290 E Frontage\TMP1.IL58 @ I-290E.dgn

FILE NAME = ...\TMP1.IL58 @ I-290E.dgn	USER NAME = FPACIONE	DESIGNED - ABR	REVISED -
		DRAWN - FPB / FCP	REVISED -
	PLOT SCALE = 20'	CHECKED - MJT	REVISED -
	PLOT DATE = 1/26/2009	DATE -	REVISED -

STATE OF ILLINOIS
DEPARTMENT OF TRANSPORTATION

TEMPORARY TRAFFIC SIGNAL INSTALLATION AND REMOVE EXISTING TRAFFIC SIGNAL EQUIPMENT
IL. ROUTE 58 (GOLF ROAD) AND I-290 E. FRONTAGE ROAD

SCALE: 1"= 20' | SHEET NO. OF SHEETS | STA. TO STA.

F.A.P. RTE.	SECTION	COUNTY	TOTAL SHEETS	SHEET NO.
VAR	2009-008-TS	COOK	41	26
		CONTRACT NO. 60G04		

FED. ROAD DIST. NO. | ILLINOIS | FED. AID PROJECT