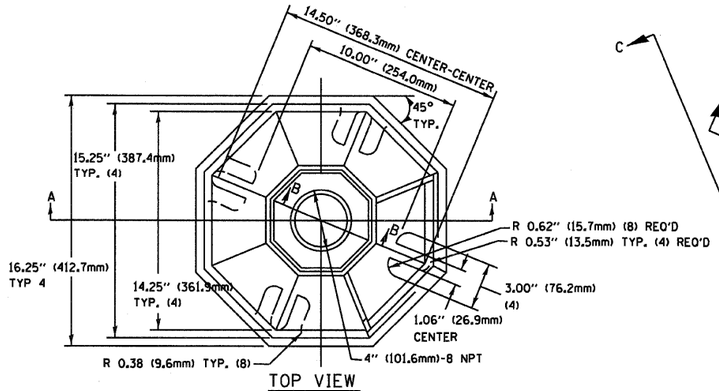

TOP VIEW

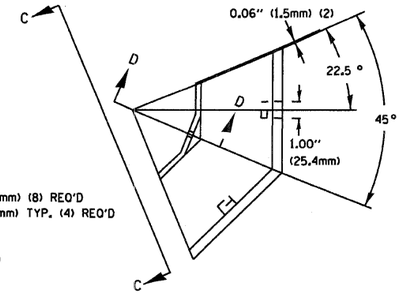

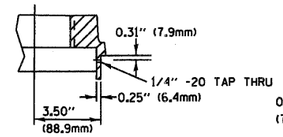

SECTION B-B

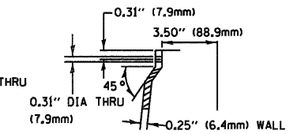

SECTION D-D

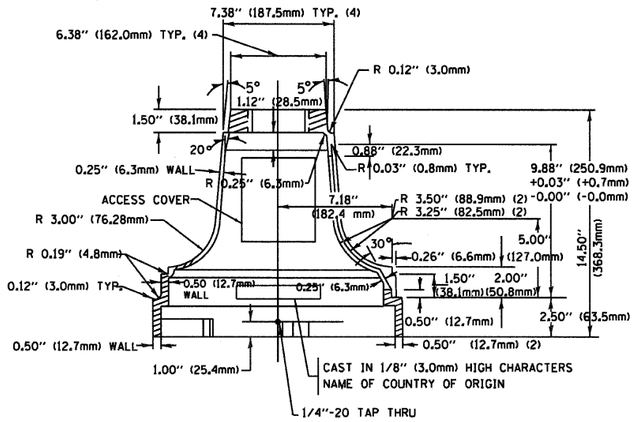

SECTION A-A

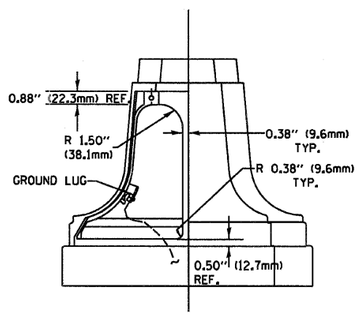

VIEW C-C

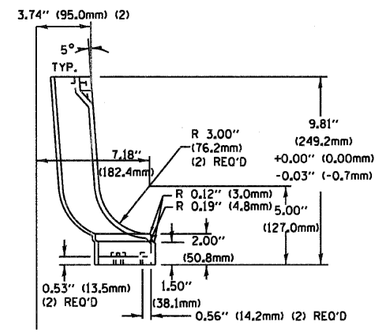

TRAFFIC SIGNAL POST - MOUNTING BASE - TYPE A

MATERIAL:
- ASTM A48 CLASS 30 GREY IRON
- ASTM A123 HOT DIPPED GALVANIZED

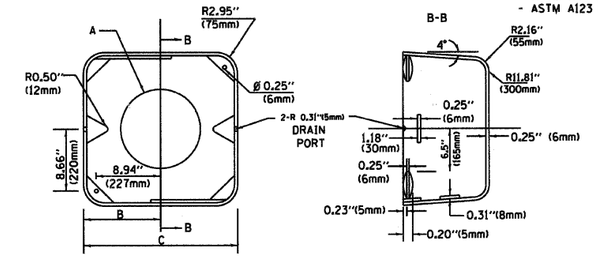

TYPE	A	B	C	HEIGHT	WEIGHT
I	ø 10.125" (257mm)	9.5" (241mm)	19" (483mm)	12" (300mm)	24kg
II	ø 11.125" (283mm)	10.75" (273mm)	21.5" (546mm)	12" (300mm)	26kg

SHROUD DETAIL

NOTE:
SUPPORT EXISTING CABINET AND CONTROL EQUIPMENT ABOVE FOUNDATION TO KEEP TRAFFFIC SIGNAL FUNCTIONING WHILE FOUNDATION MODIFICATION WORK IS PROCEEDING.

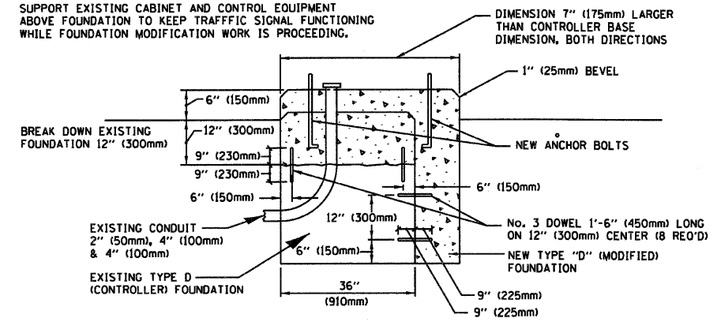

MODIFY EXISTING TYPE "D" FOUNDATION

(NOT TO SCALE)

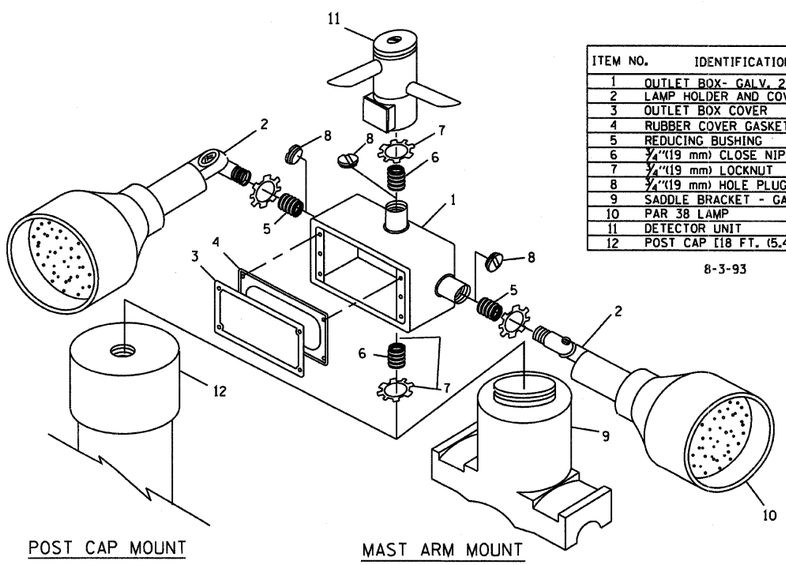

POST CAP MOUNT

MAST ARM MOUNT

EMERGENCY VEHICLE DETECTOR WITH CONFIRMATION BEACON MOUNTING DETAIL

ITEM NO.	IDENTIFICATION
1	OUTLET BOX- GALV. 21 CU.IN. (0.000344 CU-M)
2	LAMP HOLDER AND COVER
3	OUTLET BOX COVER
4	RUBBER COVER GASKET
5	REDUCING BUSHING
6	¾"(19 mm) CLOSE NIPPLE
7	¾"(19 mm) LOCKNUT
8	¾"(19 mm) HOLE PLUG
9	SADDLE BRACKET - GALV.
10	PAR 38 LAMP
11	DETECTOR UNIT
12	POST CAP [18 FT. (5.4 m) POST MIN.]

8-3-93

NOTES:

1. ALL ELECTRICAL ITEMS, EXCEPT ITEMS #2 AND #11 SHALL BE ALUMINUM OR GALVANIZED
2. ITEM #1- OZ/GEDNEY FSX-1-50 OR EQUIVALENT
   ITEM #2- MULBERRY CON-O-SHADE LAMP SHIELD OR EQUIVALENT
   ITEM #9- "BAND-IT" SADDLE BRACKET OR EQUIVALENT
3. WHEN POST MOUNTING IS SPECIFIED, ITEM #9 SHALL NOT BE REQUIRED. THE DETECTION UNIT SHALL BE MOUNTED DIRECTLY ON TOP OF THE CAP BY DRILLING AND TAPPING A ¾"(19 mm) HOLE WITH PIPE THREADS. THE POST CAP SHALL EITHER BE SCREWED TO THE TOP OF THE POST OR A MINIMUM OF 3 TIGHTENING SCREWS SHALL BE REQUIRED ON EACH CAP.

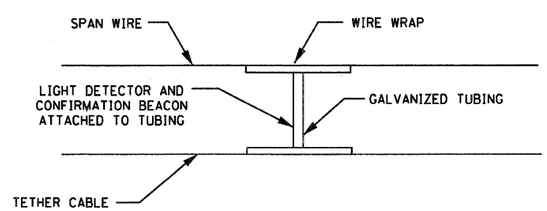

LIGHT DETECTOR AND CONFIRMATION BEACON MOUNTING FOR TEMPORARY TRAFFIC SIGNALS

(NOT TO SCALE)

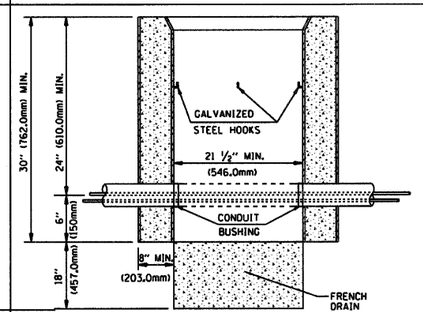

ELEVATION

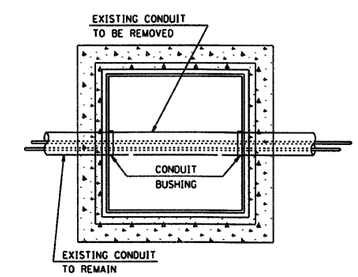

PLAN

NOTES:
1. REMOVAL OF EXISTING CONDUIT FROM THE HANDHOLE AND THE INSTALLATION OF THE CONDUIT BUSHING SHALL BE INCIDENTAL TO THE HANDHOLE.

DETAIL
HANDHOLE TO INTERCEPT EXISTING CONDUIT
N.T.S.

REVISIONS	
NAME	DATE

ILLINOIS DEPARTMENT OF TRANSPORTATION

DISTRICT 1

STANDARD TRAFFIC SIGNAL DESIGN DETAILS

SCALE: VERT. HORIZ. NONE
DATE 1-01-02

DRAWN BY: RWP
DESIGNED BY: DAD
CHECKED BY: DAZ
SHEET 4 OF 4

FILE NAME = $FILEL$	USER NAME = $USER$	DESIGNED - JS	REVISED -
		DRAWN - DW	REVISED -
	PLOT SCALE = $SCALE$	CHECKED - JD	REVISED -
	PLOT DATE = $DATE$	DATE -	REVISED -

STATE OF ILLINOIS
DEPARTMENT OF TRANSPORTATION

STANDARD TRAFFIC SIGNAL DESIGN DETAILS – SHEET 4 OF 4

SCALE: NONE | SHEET NO. 6 OF 29 SHEETS | STA. | TO STA.

F.A.P. RTE.	SECTION	COUNTY	TOTAL SHEETS	SHEET NO.
350	2009-013 TS	COOK	29	6

CONTRACT NO. 60G11

FED. ROAD DIST. NO. | ILLINOIS | FED. AID PROJECT