F.A.I. RTE.	SECTION	COUNTY	TOTAL SHEETS	SHEET NO.
57	2021.1B-R	COOK	101	048
STA.		TO STA.		
FED. ROAD DIST. NO. 1	ILLINOIS	FED. AID PROJECT		

CONTRACT NO. 62532

PLAN

FRAME & COVER REMOVED

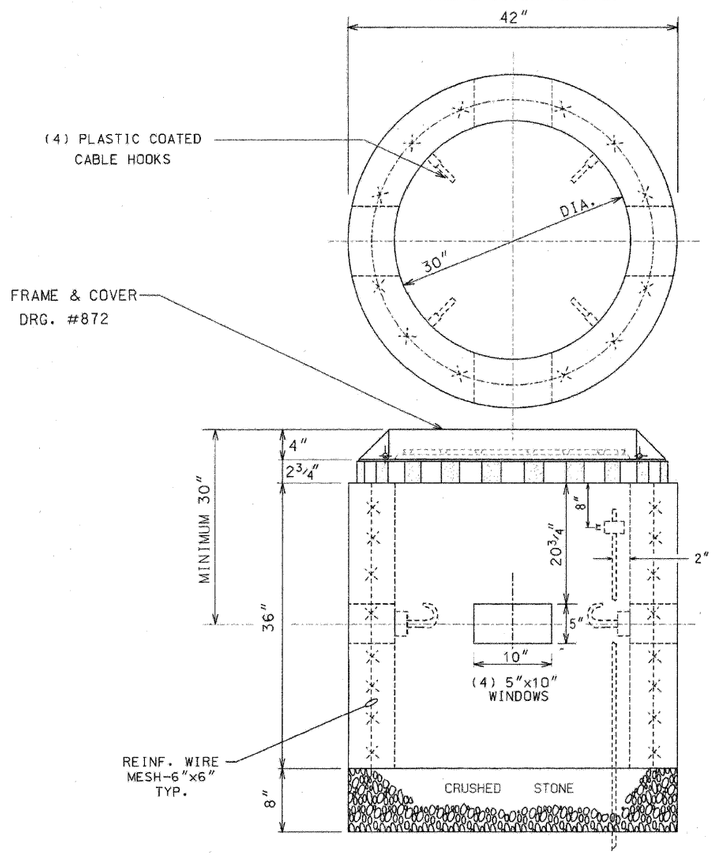

COMPLETE COMMODITY CODE NO. 05-6610-5310M			
CODE NO.	MATERIALS	SIZE	QUAN.
(1) 05-6610-5310	PRE-CAST HANDHOLE	30"X36"	1
(2) 05-9075-5470	STONE 3/4" CRUSHED	BAG	5
(2) 05-5082-5330	SONO TUBE	30"	1
(2) 05-5082-5342	SONO TUBE	42"	1
(2) 05-3267-2940	CONC. REDI-MIX	CU. YD.	1/2
(2) 57-0770-0000	6" X 6" MESH	36"X10'	1
05-1452-9720	BRICK		24
02-4299-5524	FRAME MANHOLE	24"	1
02-4574-5040	COVER, MANHOLE	24"	1
09-7796-9312	GROUND ROD	3/4"X12'	1
09-2630-3240	GROUND CLAMP		1

(1) PRE-CAST HANDHOLE SHALL INCLUDE CABLE HOOKS AND CONDUIT KNOCKOUTS.
(2) THESE ITEMS ARE FOR POURED-IN-PLACE HANDHOLES ONLY.

CONSTRUCTION NOTES:

1. 8" BED OF STONE FOR DRAINAGE.
2. ALL METALLIC CONDUITS ENTERING HANDHOLE SHALL EXTEND MINIMUM 1" & MAXIMUM 3" INSIDE INNER WALL AND BE EQUIPPED WITH AN APPROVED TYPE OF THREADED GROUNDING BUSHING.

DATE	REVISION	
B 01-23-00	ADDED CABLE HOOKS PER COMMISSIONER MURPHY	RC/RD
A 12-8-95	REDRAW (CAD)	MP.

30" DIA. CONCRETE HANDHOLE

CITY OF CHICAGO
DEPT. OF STREETS AND SANITATION
BUREAU OF ELECTRICITY
STANDARD OF ELECTRICAL ENGINEERING

DRAFTSMAN: M. PATTON | CHIEF DRAFTSMAN: B. CARTER | ENGINEER: TROMPKA DEBARTOLO
SUPERVISING ENGINEER: ELEC. DESIGN ENGR.
ENGINEER OF ELECTRICITY
DEPT. OF ELECTRICITY
DEPUTY COMMISSIONER: B. Murphy

DWG. NO. 867

SIZE: 11" 17" | SCALE: NONE | DATE: 12-8-95

ES-12

REVISIONS	
NAME	DATE

ILLINOIS DEPARTMENT OF TRANSPORTATION
111TH STREET OVER
F.A.I ROUTE 57 (INTERSTATE 57)

ELECTRICAL STANDARD DETAILS

SCALE:
DATE: 01/16/09
DRAWN BY: N/A
CHECKED BY: N/A

TENG

TENG & ASSOCIATES, INC.
ENGINEERS/ARCHITECTS/PLANNERS
205 N. MICHIGAN AVE. CHICAGO, IL 60601
TELEPHONE: 312/616-0030

..\111TH ST BORDER.DGN ..\PVMOOTOOL.DGN
IHR-2003, IHR8ST T:\DOCUMENT\930560\CIVIL\DGN\EMHCOVER.DGN
1 2 3 4 5 6 7 8 9 10 11 12 13 14 15 16 17 18 19 20 21 22 23 24 25 26 27 28 29 30 31 32 33 34 35 36 37 38 39 40 41 42 43 44 45 46 47 48 49 50 51 52 53 54 55 56 57 58 59 60 61 62 63 HEADER