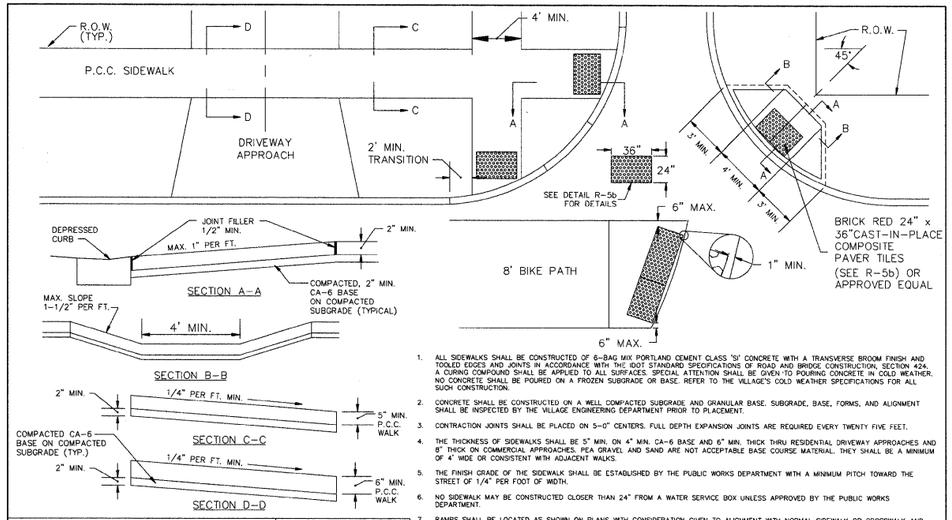

1. ALL SIDEWALKS SHALL BE CONSTRUCTED OF 6-BAG MIX PORTLAND CEMENT CLASS 'SI' CONCRETE WITH A TRANSVERSE BROOM FINISH AND TOOLED EDGES AND JOINTS IN ACCORDANCE WITH THE IDOT STANDARD SPECIFICATIONS OF ROAD AND BRIDGE CONSTRUCTION, SECTION 424. A CURING COMPOUND SHALL BE APPLIED TO ALL SURFACES. SPECIAL ATTENTION SHALL BE GIVEN TO POURING CONCRETE IN COLD WEATHER. NO CONCRETE SHALL BE POURED ON A FROZEN SUBGRADE OR BASE. REFER TO THE VILLAGE'S COLD WEATHER SPECIFICATIONS FOR ALL SUCH CONSTRUCTION.
2. CONCRETE SHALL BE CONSTRUCTED ON A WELL COMPACTED SUBGRADE AND GRANULAR BASE. SUBGRADE, BASE, FORMS, AND ALIGNMENT SHALL BE INSPECTED BY THE VILLAGE ENGINEERING DEPARTMENT PRIOR TO PLACEMENT.
3. CONTRACTION JOINTS SHALL BE PLACED ON 5-0" CENTERS. FULL DEPTH EXPANSION JOINTS ARE REQUIRED EVERY TWENTY FIVE FEET.
4. THE THICKNESS OF SIDEWALKS SHALL BE 5" MIN. ON 4" MIN. CA-6 BASE AND 6" MIN. THICK THRU RESIDENTIAL DRIVEWAY APPROACHES AND 8" THICK ON COMMERCIAL APPROACHES. PEA GRAVEL AND SAND ARE NOT ACCEPTABLE BASE COURSE MATERIAL. THEY SHALL BE A MINIMUM OF 4' WIDE OR CONSISTENT WITH ADJACENT WALKS.
5. THE FINISH GRADE OF THE SIDEWALK SHALL BE ESTABLISHED BY THE PUBLIC WORKS DEPARTMENT WITH A MINIMUM PITCH TOWARD THE STREET OF 1/4" PER FOOT OF WIDTH.
6. NO SIDEWALK MAY BE CONSTRUCTED CLOSER THAN 24" FROM A WATER SERVICE BOX UNLESS APPROVED BY THE PUBLIC WORKS DEPARTMENT.
7. RAMPS SHALL BE LOCATED AS SHOWN ON PLANS WITH CONSIDERATION GIVEN TO ALIGNMENT WITH NORMAL SIDEWALK OR CROSSWALK AND MAINTENANCE OF SUFFICIENT CURB LENGTH AT CORNER RADIUS TO PREVENT VEHICULAR ENCROACHMENT.
8. RAMPS SHALL NOT HAVE A SLOPE GREATER THAN 1" PER FOOT EXCEPT WHERE BUILDING OR OTHER RESTRICTIONS WILL NOT PERMIT.
9. THICKNESS OF RAMPS WILL BE THE SAME AS THE ADJACENT SIDEWALK WITH A MINIMUN 4".

VILLAGE OF LAKE IN THE HILLS	REVISIONS NO.	BY	DATE
PUBLIC WORKS DEPARTMENT			
DATE APPROVED: 02-26-09			

PUBLIC SIDEWALK AND HANDICAP RAMP DETAIL

R-5a

PRODUCT SPECIFICATIONS

CAST-IN-PLACE COMPOSITE PAVER TILES
Inline Dome Pattern: Tactile Warning Surface

DOME GEOMETRY — *In accordance with ADA Regulations for Detectable Warning on Curb Ramps:* raised truncated domes with a diameter of nominal 0.9", a height of nominal 0.2", and a center-to-center spacing of 1.67" minimum, and 2.35" maximum.

PANEL DIMENSIONS — Use ADA Solutions Part # 2436IDPave2, #2448IDPave2, #2460IDPave2, Brick Red, or Approved Equal

MATERIAL — A homogenous glass and carbon reinforced composite which is colorfast and UV stable. Truncated Domes are fiberglass reinforced for enhanced durability. The TWS panel color is uniform throughout and does not rely on any type of paint coating to achieve color stability. Standard colors include: Federal Yellow, Brick Red, Clay Red, Dark Gray, Black, and Blue.

INSTALLATION — TWS Units are to be used on new curb ramp locations. The TWS Units can be pre-filled with concrete and set in place or pressed into place in the freshly poured concrete.

PHYSICAL CHARACTERISTICS:

Compressive Strength	28,900 psi	ASTM D 695
Flexural Strength	29,300 psi	ASTM D 790
Water Absorption	.07%	ASTM D 570
Slip Resistance	1.18 Dry/1.05 Wet	ASTM C 1028
Flame Spread Index	20	ASTM E 84
Salt Spray	No Change (200 hours)	ASTM B 117
Chemical Stain Testing	No Deterioration	ASTM 1308
Abrasion Resistance	549	ASTM C 501
Accelerated Weathering	Delta E < 5.0 (2,000 hours)	ASTM G 155
Tensile Strength	11,600 psi	ASTM D 638
Adhesion to Concrete (20° -180°)	No Delamination or Degradation	ASTM C 903
Freeze/Thaw/Heat	No Disintegration	ASTM C 1026

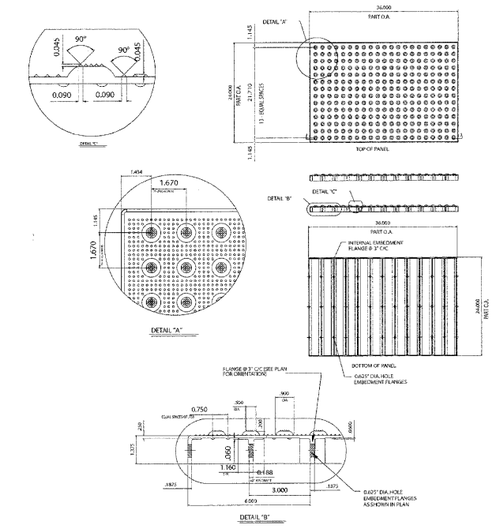

VILLAGE OF LAKE IN THE HILLS	REVISIONS NO.	BY	DATE
PUBLIC WORKS DEPARTMENT			
DATE APPROVED: 02-26-09			

CAST-IN-PLACE COMPOSITE PAVER TILES
BRICK RED, 24" X 36"

R-5b

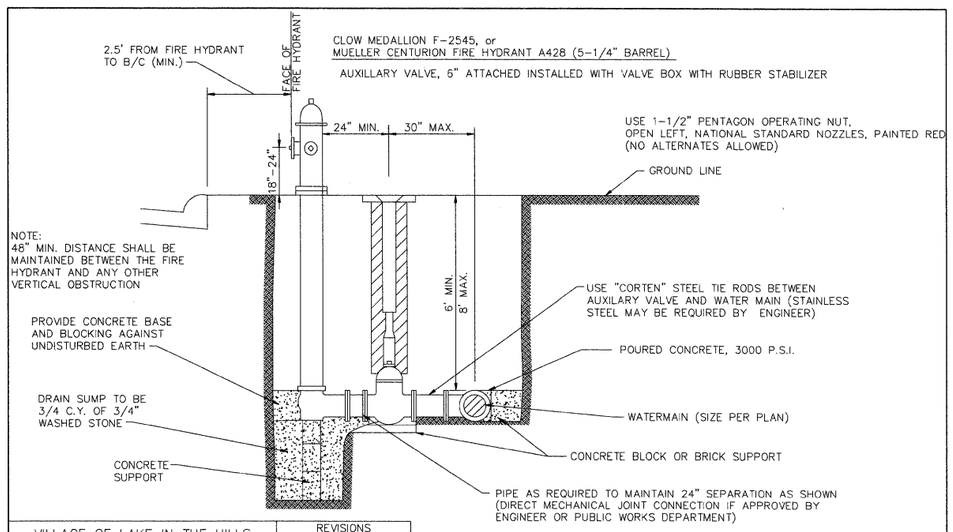

VILLAGE OF LAKE IN THE HILLS	REVISIONS NO.	BY	DATE
PUBLIC WORKS DEPARTMENT	1	LT	10/05
DATE APPROVED: 12-09-04	2.		
	3.		
	4.		
	5.		

NOTE: FIRE HYDRANTS SHALL BE PLACED A MAXIMUM OF 300 FEET APART. LOCATION OF HYDRANTS MUST BE APPROVED BY ENGINEER OR PUBLIC WORKS DEPARTMENT.

FIRE HYDRANT INSTALLATION DETAIL

W-5

MILLER ROAD - PHASE 1
07/0001
07/0001-ser-ridsign

SEC Group, Inc. — Illinois Professional Design Firm # 184-000108 — Engineering, Surveying, Planning, Landscape Architecture — McHenry • Yorkville • New Lenox • Chicago — www.secgroupinc.com	USER NAME = bhartman	DESIGNED - BDH	REVISED -
		DRAWN -	REVISED -
	PLOT SCALE = NTS	CHECKED -	REVISED -
	PLOT DATE = 2/13/2009	DATE - 2/12/09	REVISED -

VILLAGE OF LAKE IN THE HILLS

GENERAL DETAILS

SCALE: NTS | SHEET NO. 6 OF 6 SHEETS | STA. | TO STA.

F.A. RTE.	SECTION	COUNTY	TOTAL SHEETS	SHEET NO.
4039	08-00029-00-FP	MCHENRY	29	21
		CONTRACT NO. 63142		
FED. ROAD DIST. NO.	ILLINOIS	FED. AID PROJECT		