EXISTING TYPICAL SECTION F.A.P. 412 (I–39)

I–39 /I–55 INTERCHANGE

TYPICAL I–39 RAMPS AND I–39 MAINLINE WITH AUXILIARY LANE

STA. 41+92.00 I–39 NB TO STA. 110+00.00 I–39 NB

STA. 77+32.00 I–39 SB TO STA. 110+00.00 I–39 SB

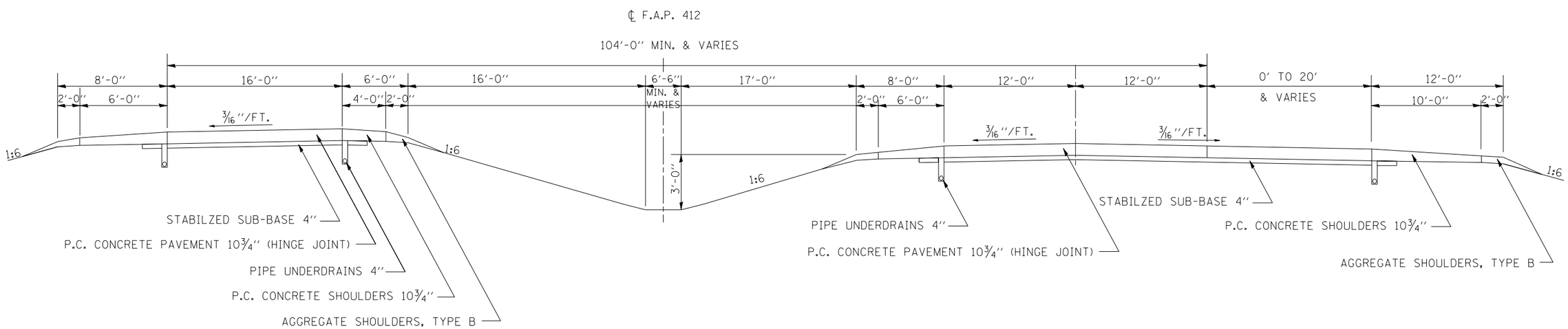

FILE NAME = c:\pw_work\PWIDOT\BLACKRT\dms84829\D570739-SHT-TYPICAL.dgn	USER NAME = blackrt	DESIGNED -	REVISED -	STATE OF ILLINOIS DEPARTMENT OF TRANSPORTATION	EXISTING TYPICAL SECTION	F.A. RTE.	SECTION	COUNTY	TOTAL SHEETS	SHEET NO.
		DRAWN JJB	REVISED -			39	D5 PATCHING 2009-2	MCLEAN	25	6
	PLOT SCALE = 40.0045 '/ IN.	CHECKED -	REVISED -					CONTRACT NO. 70739		
	PLOT DATE = 3/23/2009	DATE -	REVISED -		SCALE: SHEET NO. OF SHEETS STA. TO STA.		ILLINOIS FED. AID PROJECT			