F.A.I. RTE.	SECTION	COUNTY	TOTAL SHEETS	SHEET NO.
70	60-10K-1,60-10HB	MADISON	420	254
STA.	TO STA.			
FED. ROAD DIST. NO.	ILLINOIS	FED. AID PROJECT		

CONTRACT NO. 76709

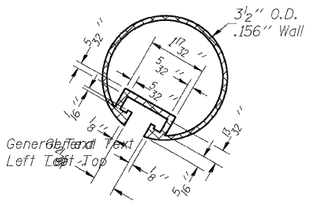

SECTION THRU TOP RAIL

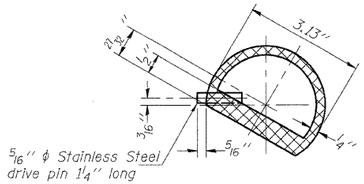

SECTION THRU SPLICE

For Top Rail

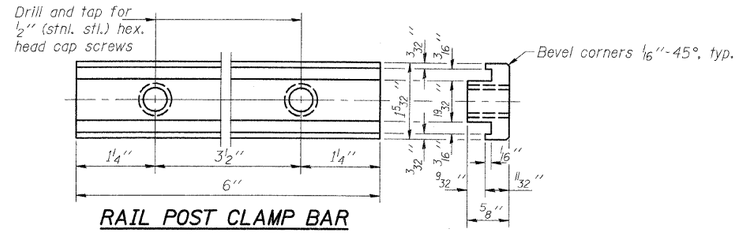

RAIL POST CLAMP BAR

For Top Rail

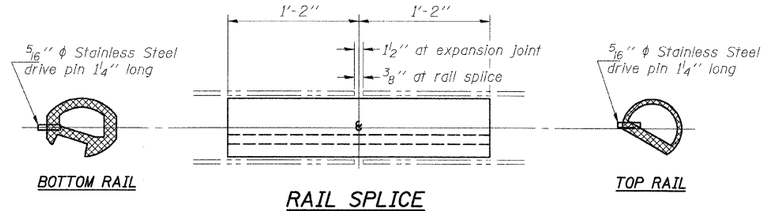

BOTTOM RAIL

RAIL SPLICE

TOP RAIL

Notes: All Posts shall be normal to parapet.

All Aluminum Alloy Extruded Rail shall be supplied in modular lengths of 30 feet, except at the end of bridge or over open joints in bridge deck where the rail shall be attached to a minimum of 2 posts. If the rail is on a horizontal curve of 2300 foot radius or less, the modular lengths may be reduced but shall be attached to a minimum of 2 posts.

All joints in rail shall be spliced per detail.

Provide 1-⅛" and 2-1/16" Aluminum Shims for 25% of the Posts. Rail elements shall be parallel to Grade-high spots will be ground and low spots shimmed.

Railing shall be according to Section 509 of the Standard Specifications, except as noted, and will be paid for at the contract unit price per foot for ALUMINUM RAILING, TYPE L.

Aluminum alloy rail shall conform to ASTM B 221 alloy 6061-T6 or 6351-T5 with min. yield 35 ksi, min. tensile 38 ksi, and elongation of 10% in 2 inches.

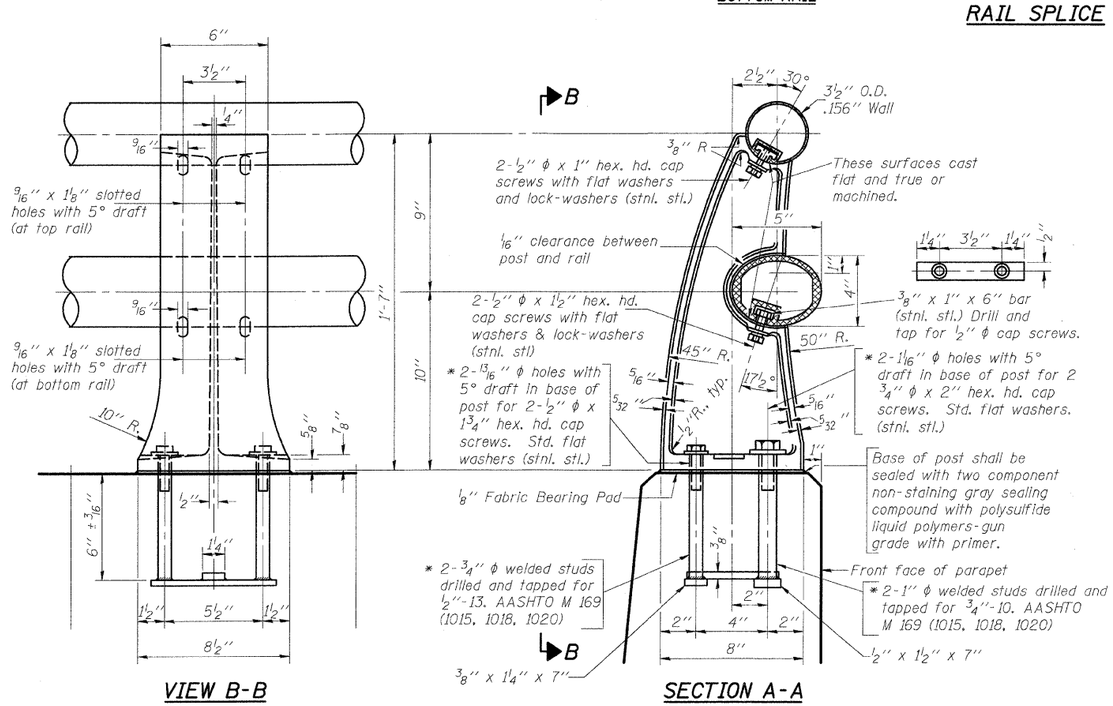

VIEW B-B

SECTION A-A

RAIL POST DETAILS

* In lieu of the cast-in-place anchor device shown, the Contractor has the option of drilling and epoxy grouting stainless steelanchor rods of the same diameter and grade as the specified cap screws. Embedment shall be according to the manufacturer's specifications.

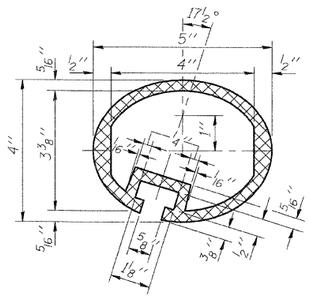

SEC. THRU ELLIPTICAL RAIL SECTION

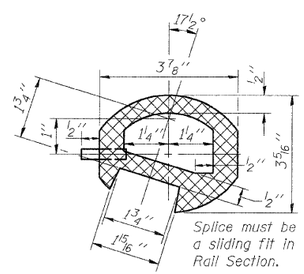

SEC. THRU SPLICE

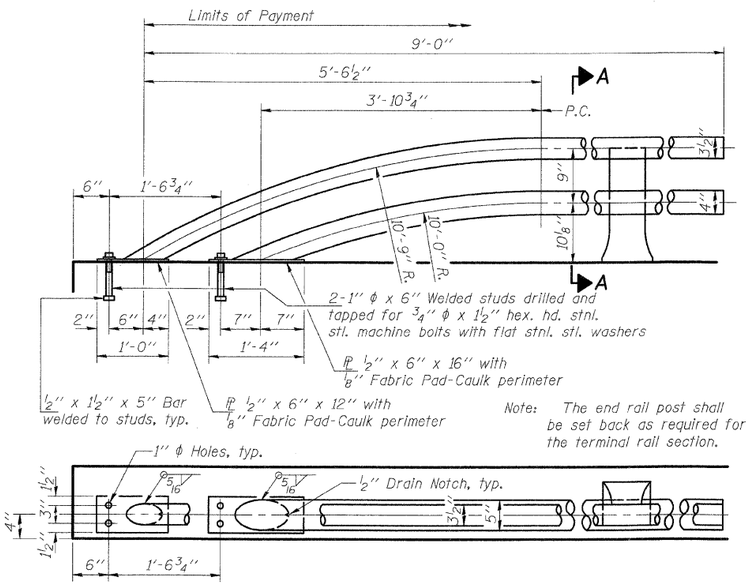

RAIL TERMINAL SECTION

BILL OF MATERIAL

Item	Unit	Quantity
Aluminum Railing, Type L	Foot	408

TYPE L ALUMINUM RAILING

SHT. S-36 OF S-68

STV Incorporated
Engineers/Architects/Planners/Construction Managers
200 W. Monroe Street, Suite 1650
Chicago, IL 60606-5015
312/553-0655, FAX 312/553-0661

REVISIONS	
NAME	DATE

ILLINOIS DEPARTMENT OF TRANSPORTATION
IL ROUTE 162 OVER I-55/70 IN TROY
F.A.I ROUTE 70 SECTION 60-10K-1, 60-10HB
MADISON COUNTY STATION 499+48.35
STRUCTURE NO. 060-0338

TYPE L RAILING

DATE: 03/06 DESIGNED: BTO CHECKED: JAN DRAWN: BTO CHECKED: JAN

R-20 9-01-03