STATE OF ILLINOIS
DEPARTMENT OF TRANSPORTATION

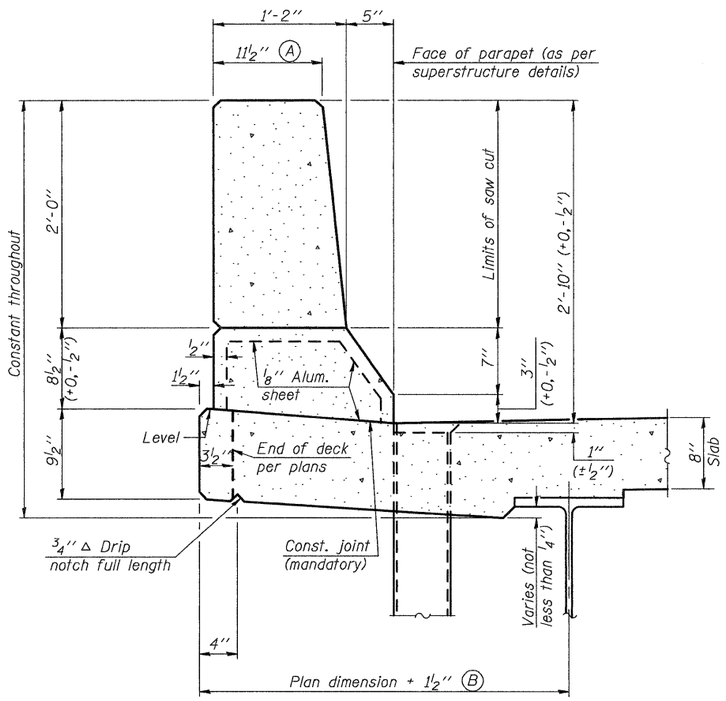

SECTION
(Showing dimensions)

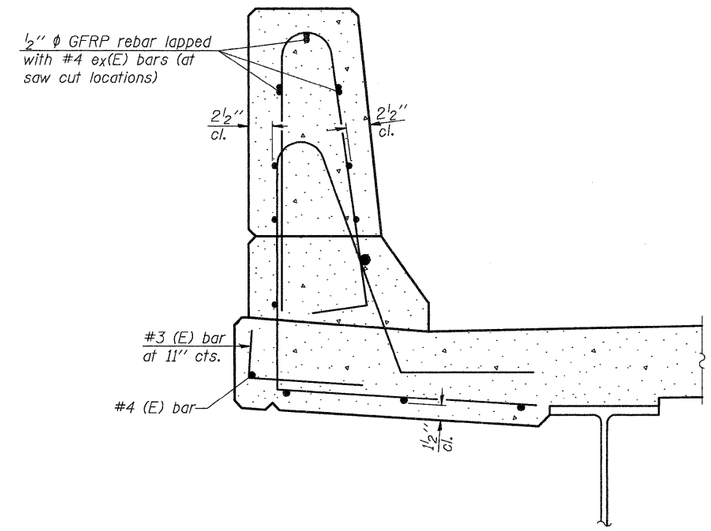

SECTION
(Showing reinforcement clearances for slip forming and additional reinforcement bars)

GENERAL NOTES

All dimensions shall remain the same as shown on contract plans, except dimensions A and B which are to be revised as shown to provide additional clearance. Additional concrete needed to revise dimension A and B= 0.0165 cu. yds./ft. of parapet.

Place aluminum sheet in curb portion at and near piers. Full thickness saw cut at all joint locations in lieu of cork joint filler.

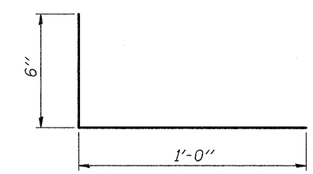

#3 (E) BAR

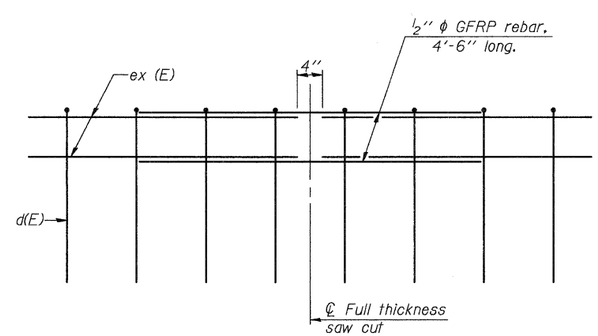

GFRP REBAR STIFFENING DETAIL
(Place as shown in parapet section at each parapet joint location.)

CONCRETE PARAPET
SLIPFORMING OPTION
ILLINOIS ROUTE 3 OVER
PIASA CREEK
F.A.U. ROUTE 8956 SEC 59BR-1
MADISON COUNTY
STATION 638+11.00
STRUCTURE NO. 060-0343

SHEET NO. 25	F.A.U. RTE.	SECTION	COUNTY	TOTAL SHEETS	SHEET NO.
	8956	59BR-1	MADISON	75	54
28 SHEETS	STRUCTURE NO. 060-0343		CONTRACT NO. 76B18		
	FED. ROAD DIST. NO.	ILLINOIS	FED. AID PROJECT		

DESIGNED	DB
CHECKED	RS
DRAWN	ER
CHECKED	WWH

SFP-34 5-16-08

Juneau Associates, Inc. P.C.
CONSULTING ENGINEERS AND LAND SURVEYORS
2100 State Street
Granite City, Illinois 62040
Phone:(618)877-1400
Fax:(618)452-5541
100 North Research Drive
Edwardsville, Illinois 62025
Phone: (618)659-0980|(618) 659-0800
Fax: (618)659-0941
Registered Professional Service Corporation License No. 184-003389

Printed=\\STBMS\NO76B09 (LU2256)2010\Drawings\Revised Final\drawing.vln IDOT Comment\(25) Concrete Parapet Slipforming Option.dgn