CONTRACT NO. 85428

LOCAL RTE.	SECTION	COUNTY	TOTAL SHEETS	SHEET NO.
M.S. 1040	05-00010-00-PV	HENRY	136	91
STA. 41+50		TO STA. 43+00		
FED. ROAD DIST. NO. 2	ILLINOIS	FED. AID PROJECT		

SHIVE-HATTERY

Cedar Rapids, IA · Iowa City, IA · Des Moines, IA
Moline, IL · Bloomington, IL · Chicago, IL

SHIVE-HATTERY, INC. 1701 RIVER DRIVE, SUITE 200 MOLINE,IL 61265
PHONE (309) 764-7650 FAX (309) 764-8816
http://www.shive-hattery.com
ILLINOIS FIRM NUMBER: 184-000214

HORIZONTAL SCALE

0 10 20 40
SCALE IN FEET

VERTICAL SCALE

0 2.5 5 10
SCALE IN FEET

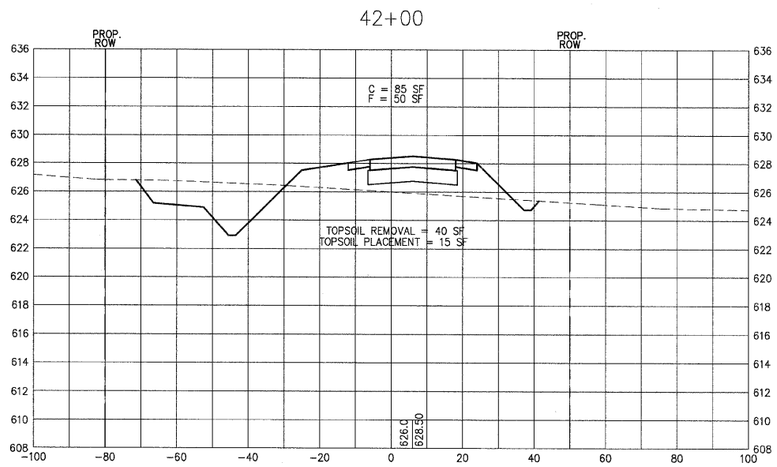

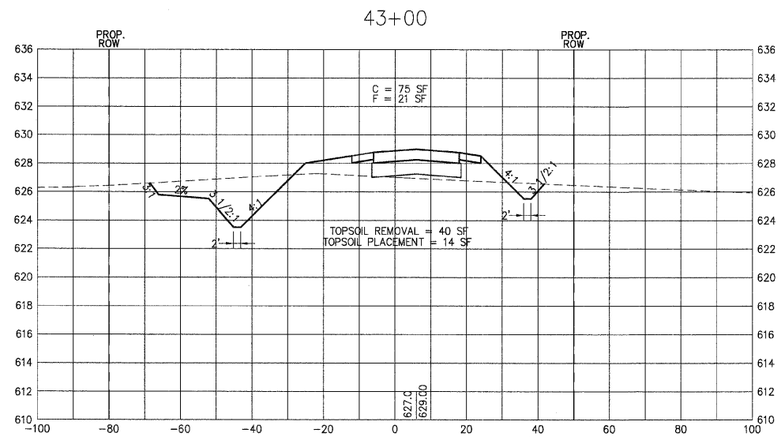

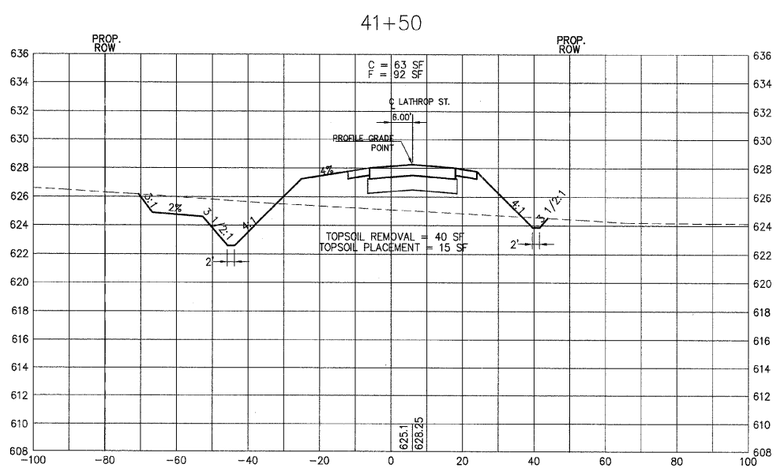

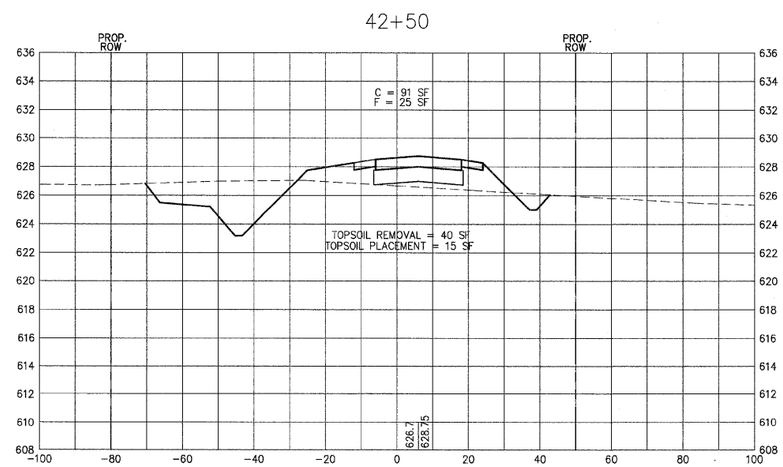

PLAN		BY	DATE
SURVEYED			
PLOTTED			
ALIGNMENT CHECKED			
RT. OF WAY CHECKED			
CADD FILE NAME			
NOTE BOOK NO.			

PROFILE		BY	DATE
SURVEYED			
PLOTTED			
GRADES CHECKED			
B.M. NOTED			
STRUCTURE NOTATIONS CHKD			
NOTE BOOK NO.			

PLOT DATE = $DATE$
FILE NAME = $FILEL$
PLOT SCALE = $SCALE$
USER NAME = $USER$

LATHROP STREET CROSS SECTIONS