ROUTE NO.	SECTION	COUNTY	TOTAL SHEETS	SHEET NO.
TR 134A	*	MORGAN	28	16
FED. ROAD DIST. NO. 7	ILLINOIS	PROJECT BROS-0137(027)		

*06-06120-00-BR CONTRACT # 93481

SHEET NO. 10 OF 12 SHEETS

NOTES:
All edges shall have standard $\frac{3}{4}$" chamfer.

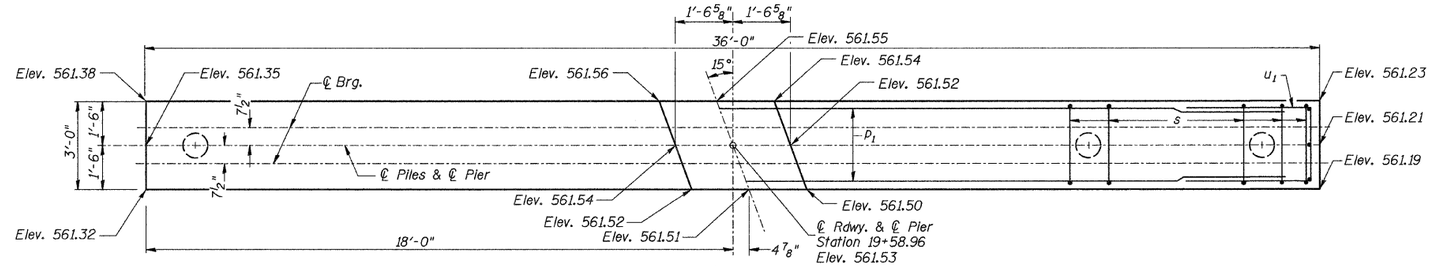

TOP PLAN

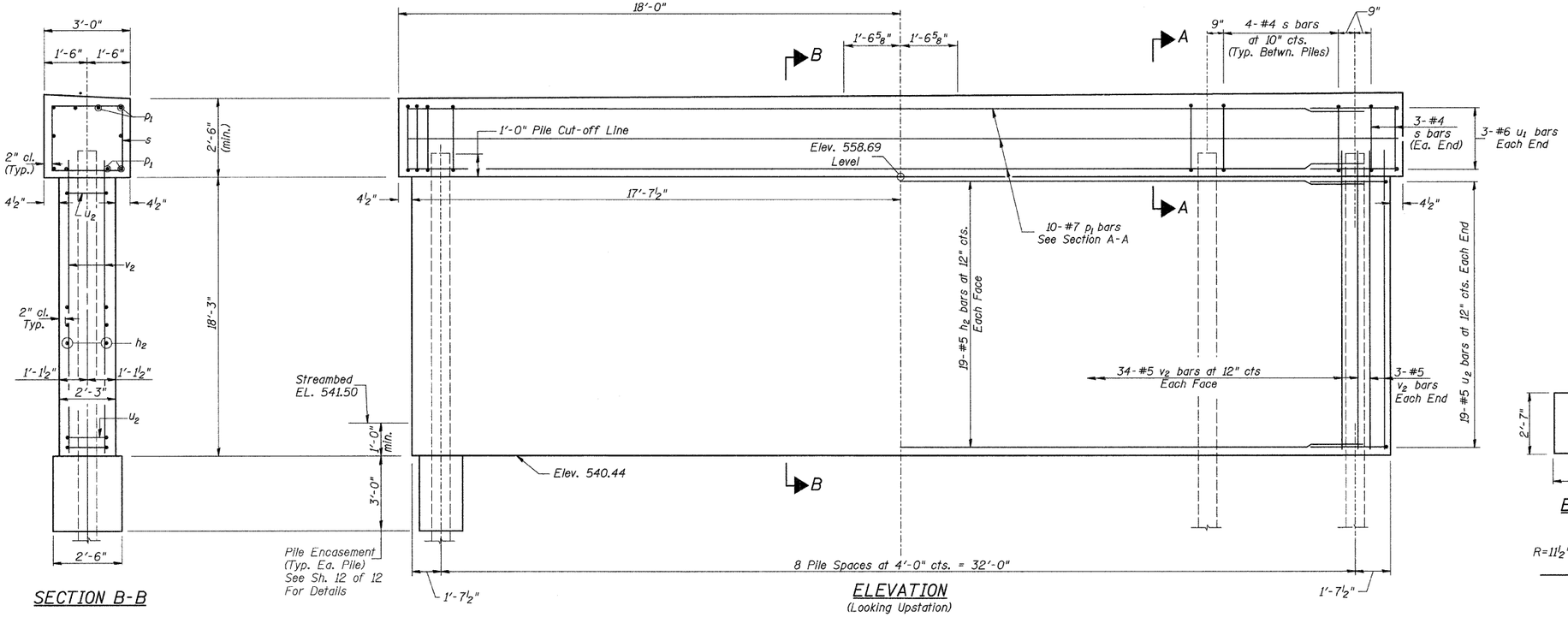

SECTION B-B

ELEVATION
(Looking Upstation)

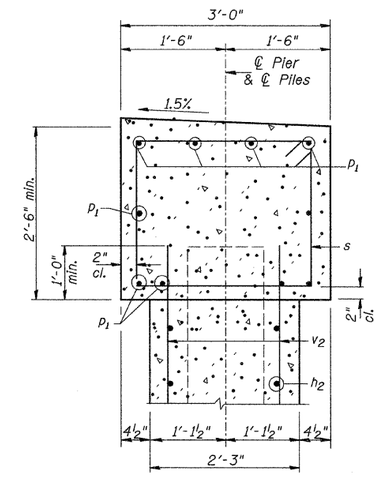

SECTION A-A

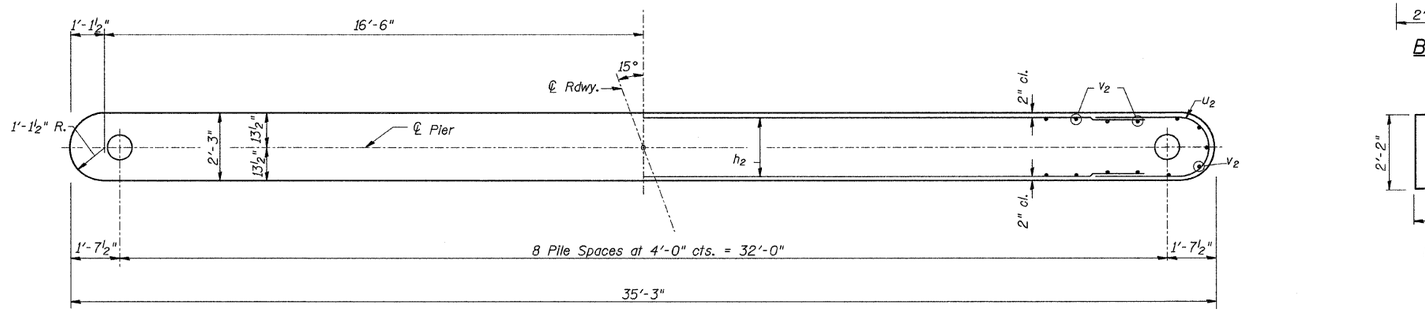

FOOTING PLAN

PILE DATA

Type & Size: Metal Shell-14"φ x 0.312" walls w/ pile shoes
Nominal Required Bearing: 480 kips
Allowable Resistance Available: 160 kips
Est. Length: 77'
No. Req'd.: 9 (Includes 1 Test Pile)

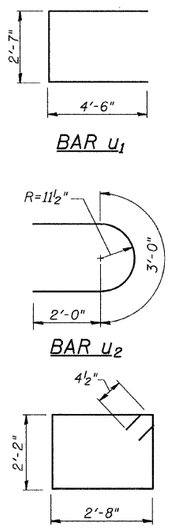

BAR u_1

BAR u_2

BAR s

PIER #1
BILL OF MATERIAL

BAR	NO.	SIZE	LENGTH	SHAPE
h_2	38	#5	32'-8"	
p_1	10	#7	35'-9"	
s	38	#4	10'-5"	
u_1	6	#6	11'-7"	
u_2	38	#5	7'-0"	
v_2	74	#5	19'-1"	
Concrete Structures			CU YD	56.9
① Reinforcement Bars			POUND	4,140
Structure Excavation			CU YD	50
Furnishing Metal Shell Piles 14"			FOOT	616
Driving Piles			FOOT	616
Test Pile Metal Shells			EACH	1
Pile Shoes			EACH	9
Concrete Encasement			CU YD	3.8
① Underwater Structure Excavation Protection, Location 1			EACH	1

① See Special Provisions

PIER #1
TOWNSHIP ROAD 134A OVER
MAUVAISE TERRE CREEK
SECTION 06-06120-00-BR
MORGAN COUNTY
STATION 20+00.00

2459B010