CONTRACT NO. 94533

F.A.P. RTE.	SECTION	COUNTY	TOTAL SHEETS	SHEET NO.
781	1YRS	CRAWFORD	212	88
STA.		TO STA.		
FED. ROAD DIST. NO.		ILLINOIS	FED. AID PROJECT	

DETAIL OF PRECAST CONCRETE BOX CULVERT M273M

(WITH LESS THAN 600 MM OF COVER)
AASHO DESIGNATION M273M
(ASTM DESIGNATION C-850M)
DESIGN LOADING = MS18

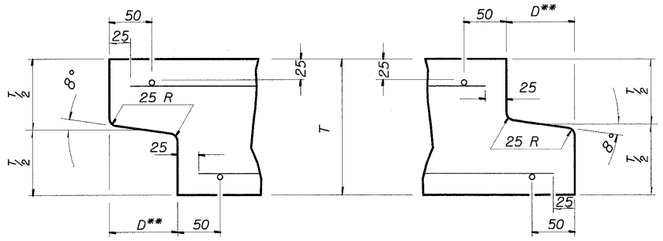

DETAIL A
(TYP. INLET END)

DETAIL B
(TYP. OUTLET END)

NOTE: INLET AND OUTLET ENDS SHALL BE COMPATIBLE.

** THE D DIMENSION SHALL CONFORM TO THE MANUFACTURER'S STANDARDS.

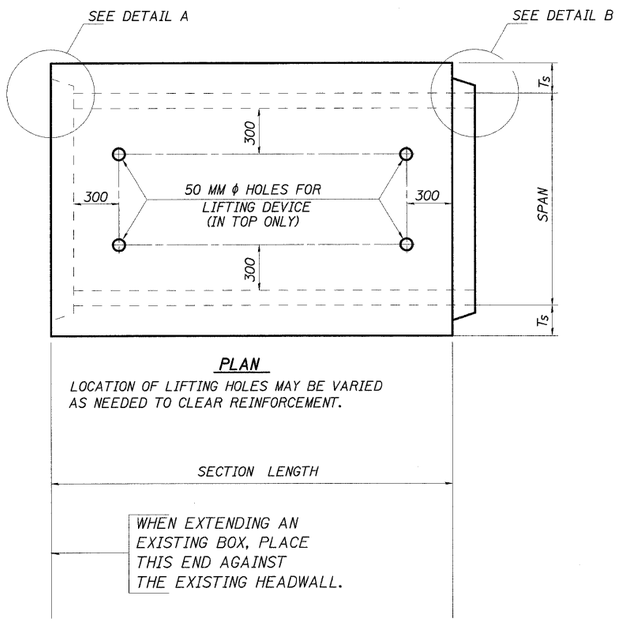

PLAN

LOCATION OF LIFTING HOLES MAY BE VARIED AS NEEDED TO CLEAR REINFORCEMENT.

SECTION LENGTH

WHEN EXTENDING AN EXISTING BOX, PLACE THIS END AGAINST THE EXISTING HEADWALL.

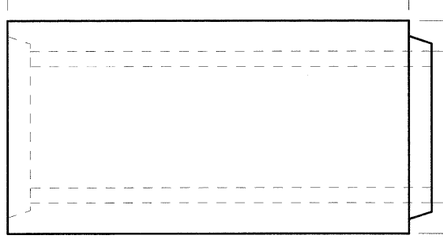

ELEVATION

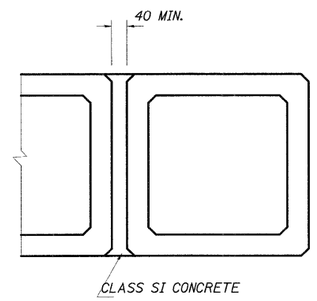

MULTIPLE UNIT PLACEMENT

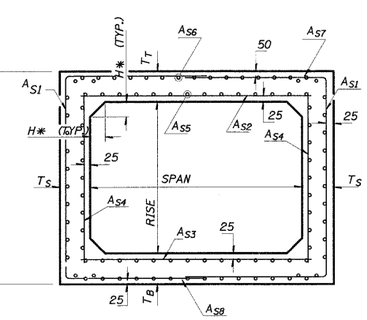

CROSS SECTION

* THE HAUNCH DIMENSION, H, IS EQUAL TO THE WALL THICKNESS, T_S.

GENERAL NOTES

SHOP PLANS FOR THE REINFORCEMENT SHALL BE SUBMITTED IN ACCORDANCE WITH THE REQUIREMENTS OF ARTICLE 504.04(a) OF THE STANDARD SPECIFICATIONS.

MINIMUM CONCRETE STRENGTH SHALL BE 35 MPa AFTER 28 DAYS.

THE JOINTS OF THE PRECAST BOX SECTIONS SHALL BE SEALED IN ACCORDANCE WITH ARTICLE 542.04(d) OF THE STANDARD SPECIFICATIONS FOR ROAD AND BRIDGE CONSTRUCTION.

THE TERMS A_{S1}, A_{S2}, ETc. DENOTE THE REQUIRED STEEL AREAS FOR REINFORCEMENT AS SPECIFIED IN ASSHTO M273M.

REINFORCEMENT SHALL BE WELDED WIRE FABRIC CONFORMING TO ASSHTO M55M. LONGITUDINAL DISTRIBUTION REINFORCEMENT MAY CONSIST OF WELDED WIRE FABRIC OR DEFORMED BARS CONFORMING TO ASSHTO M31M, M42M, OR M53M, GRADE 400.

LIFTING HOLES SHALL BE FILLED WITH CONCRETE PLUGS AND MASTIC AFTER THE BOX SECTIONS ARE IN PLACE.

DRAINAGE OPENINGS SHALL BE PROVIDED IN ACCORDANCE WITH ARTICLE 503.12 OF THE STANDARD SPECIFICATIONS. LOCATION AND SPACING OF THE OPENINGS SHALL BE SHOWN ON THE SHOP DRAWINGS.

THE P.C.C. PAVEMENT PATCH REINFORCED WITH PAVEMENT FABRIC (STANDARD 420701) WILL BE CONSTRUCTED OVER THE CULVERT. THE PATCH SHALL BE FULL PAVEMENT WIDTH, AND THE LENGTH SHALL EXTEND 600 MM BEYOND EACH SIDE OF THE CULVERT.

ALL DIMENSIONS ARE DETAILED IN MILLIMETERS UNLESS OTHERWISE NOTED.

CULVERT SIZE (METERS)				DIMENSIONS (MILLIMETERS)		
NOMINAL		ACTUAL				
SPAN	RISE	SPAN	RISE	T_T	T_B	T_S
0.9	0.6	0.914	0.610	175	150	100
0.9	0.9	0.914	0.914	175	150	100
1.2	0.6	1.219	0.610	190	150	125
1.2	0.9	1.219	0.914	190	150	125
1.2	1.2	1.219	1.219	190	150	125
1.5	0.9	1.524	0.914	200	175	150
1.5	1.2	1.524	1.219	200	175	150
1.5	1.5	1.524	1.524	200	175	150
1.8	0.9	1.829	0.914	200	175	175
1.8	1.2	1.829	1.219	200	175	175
1.8	1.5	1.829	1.524	200	175	175
1.8	1.8	1.829	1.829	200	175	175
2.1	1.2	2.134	1.219	200	200	200
2.1	1.5	2.134	1.524	200	200	200
2.1	1.8	2.134	1.829	200	200	200
2.1	2.1	2.134	2.134	200	200	200
2.4	1.2	2.438	1.219	200	200	200
2.4	1.5	2.438	1.524	200	200	200
2.4	1.8	2.438	1.829	200	200	200
2.4	2.1	2.438	2.134	200	200	200
2.4	2.4	2.438	2.438	200	200	200
2.7	1.5	2.743	1.524	225	225	225
2.7	1.8	2.743	1.829	225	225	225
2.7	2.1	2.743	2.134	225	225	225
2.7	2.4	2.743	2.438	225	225	225
2.7	2.7	2.743	2.743	225	225	225
3.0	1.5	3.048	1.524	250	250	250
3.0	1.8	3.048	1.829	250	250	250
3.0	2.1	3.048	2.134	250	250	250
3.0	2.4	3.048	2.438	250	250	250
3.0	2.7	3.048	2.743	250	250	250
3.0	3.0	3.048	3.048	250	250	250
3.3	1.2	3.353	1.219	275	275	275
3.3	1.8	3.353	1.829	275	275	275
3.3	2.4	3.353	2.438	275	275	275
3.3	3.0	3.353	3.048	275	275	275
3.3	3.3	3.353	3.353	275	275	275
3.6	1.2	3.658	1.219	300	300	300
3.6	1.8	3.658	1.829	300	300	300
3.6	2.4	3.658	2.438	300	300	300
3.6	3.0	3.658	3.048	300	300	300
3.6	3.6	3.658	3.658	300	300	300

REVISIONS	
NAME	DATE

ILLINOIS DEPARTMENT OF TRANSPORTATION

DETAIL OF PRECAST CONCRETE BOX CULVERT SECTION

SCALE NO SCALE DRAWN BY KOJ
DATE DECEMBER 22, 2008 CHECKED BY LWJ

H. M. & C. NO. 4420

PLOT DATE = 12/22/2008
FILE NAME = H:\4420\Contract 94533\SHT_082_details.dgn