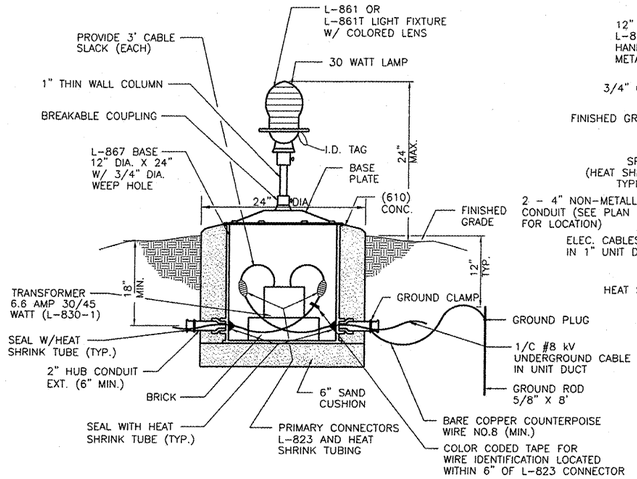

MEDIUM INTENSITY LIGHT BASE MOUNTED
NOT TO SCALE

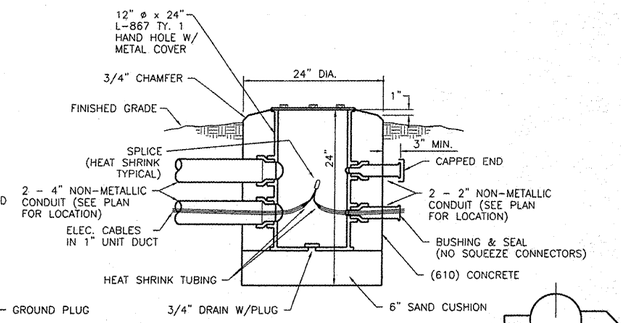

HAND HOLE DETAIL
NOT TO SCALE

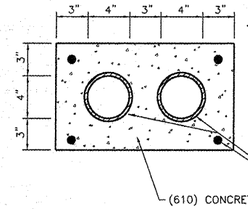

NOTES:

1. TOP OF CONCRETE ENCASEMENT TO BE NOT LESS THAN 24" BELOW FINISHED SUB-GRADE.
2. ALL UNUSED DUCTS SHALL BE PROVIDED WITH A #10 PULL WIRE AND SHALL HAVE ENDS PLUGGED IN A MANNER APPROVED BY THE RESIDENT ENGINEER.

CONCRETE ENCASEMENT
NOT TO SCALE

0 50 100
SCALE IN FEET

NORTH

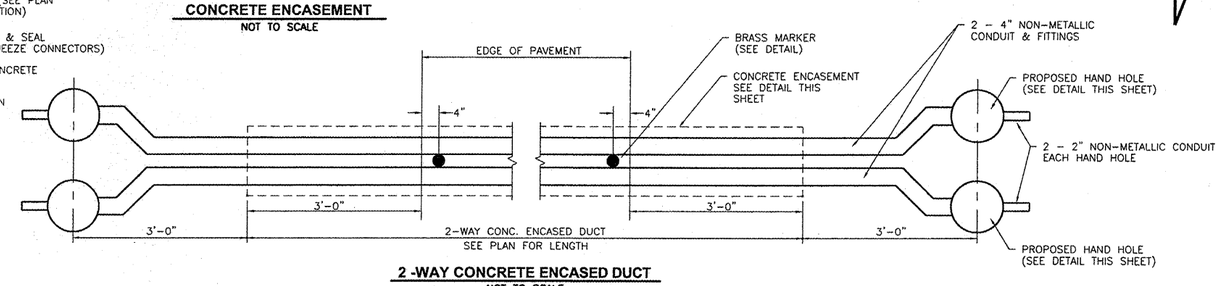

2 -WAY CONCRETE ENCASED DUCT
NOT TO SCALE

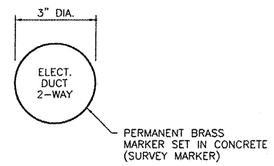

BRASS PAVEMENT MARKER DETAIL
NOT TO SCALE

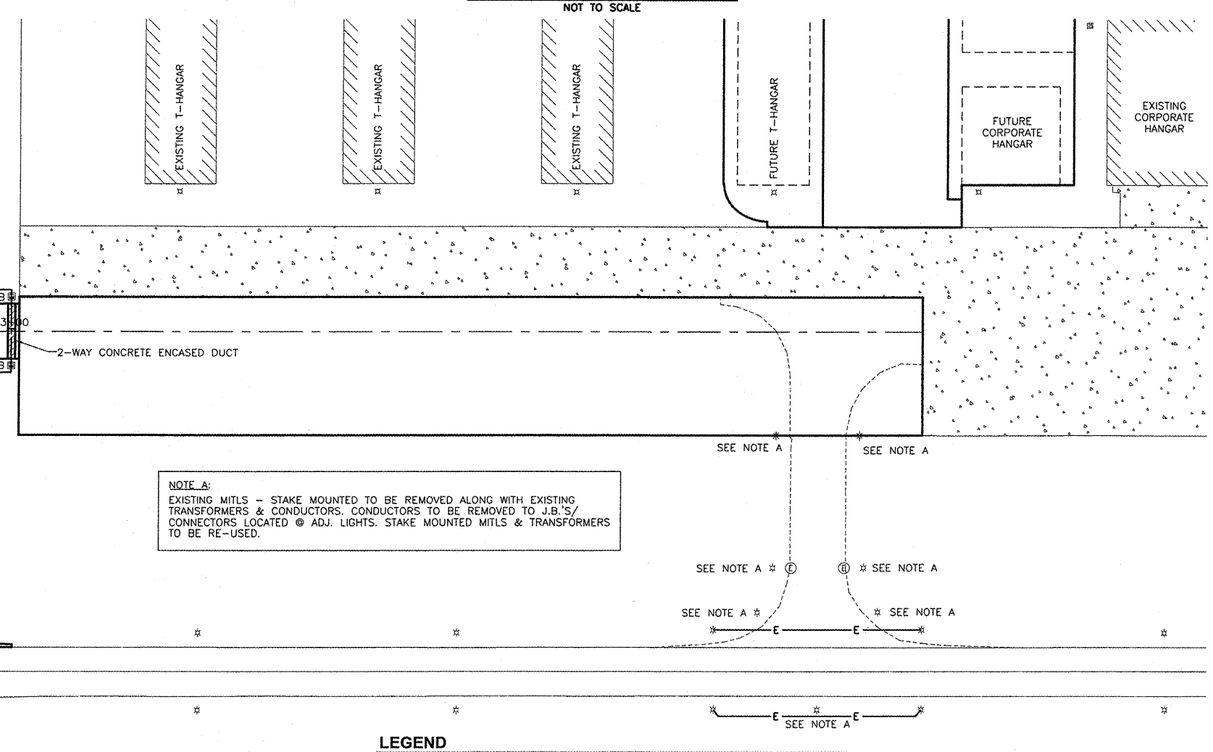

NOTE A:
EXISTING MITLS - STAKE MOUNTED TO BE REMOVED ALONG WITH EXISTING TRANSFORMERS & CONDUCTORS. CONDUCTORS TO BE REMOVED TO J.B.'S/ CONNECTORS LOCATED @ ADJ. LIGHTS. STAKE MOUNTED MITLS & TRANSFORMERS TO BE RE-USED.

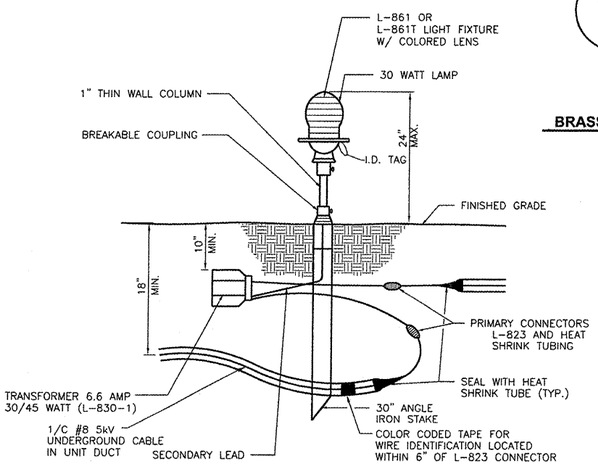

MEDIUM INTENSITY LIGHT STAKE MOUNTED
NOT TO SCALE

GENERAL NOTES

1. BREAKING GROOVE OR BREAKABLE COUPLINGS SHALL NOT EXCEED 1-1/2" ABOVE FINISHED GRADE OR BASE COVER.
2. COPPER CLAD GR. RODS 5/8" DIA. X 8'-0" LG. SHALL BE DRIVEN 1'-0" BELOW FINISHED GRADE & COUNTERPOISE CABLE SECURELY ATTACHED TO SAME GROUND RODS SHALL BE SPACED MAX. OF 1000' APART AND LOCATED NEAR FIXTURE.
3. HIGH AND LOW VOLTAGE CABLE SHALL BE RUN IN SEPARATE UNDERGROUND DUCTS.
4. WHEN HIGH AND LOW VOLTAGE CABLES ARE IN A HANDHOLE OR MANHOLE, PROTECTION SHALL BE MADE AROUND THE HIGH VOLTAGE CABLE. THE METHOD OF PROTECTION SHALL BE BY SPLIT DUCT ANCHOR CLIPPED TO THE WALL.
5. L-861 SPECIFICATION DENOTES RUNWAY LIGHT FIXTURE. L-861T DENOTES TAXIWAY LIGHT FIXTURE.

LEGEND

—E—	PROPOSED HIGH VOLTAGE CABLE
S●	PROPOSED MEDIUM INTENSITY TAXIWAY LIGHT (STAKE MOUNTED)
B▣	PROPOSED MEDIUM INTENSITY TAXIWAY LIGHT (BASE MOUNTED)
▨	PROPOSED 2-WAY CONCRETE ENCASED DUCT

CHAMLIN & ASSOCIATES, INC. ©2009
Drawing Name: C:\Users\ \1002-74-Morris-Airport-General-Aviation-Apron\CAD\C3D\010-ELEC.dwg Last Modified: Feb 09, 2009 - 2:25pm Plotted on: Feb 10, 2009 - 10:40am by nickt

DRAWN BY: JMT/NET	REVISIONS			
CHECKED BY: KWH	LEVEL	BY	DATE	DESCRIPTION
DATE: 2/09				

CHAMLIN & ASSOCIATES

PERU MORRIS ILLINOIS

MORRIS MUNICIPAL AIRPORT
MORRIS, ILLINOIS

ELECTRICAL PLAN AND DETAILS

CONSTRUCTION PLANS

CURRENT AS OF: 2/09		
SCALE: AS NOTED	SHEET	10
FILE NO.: 1002.74 Y-	OF	11