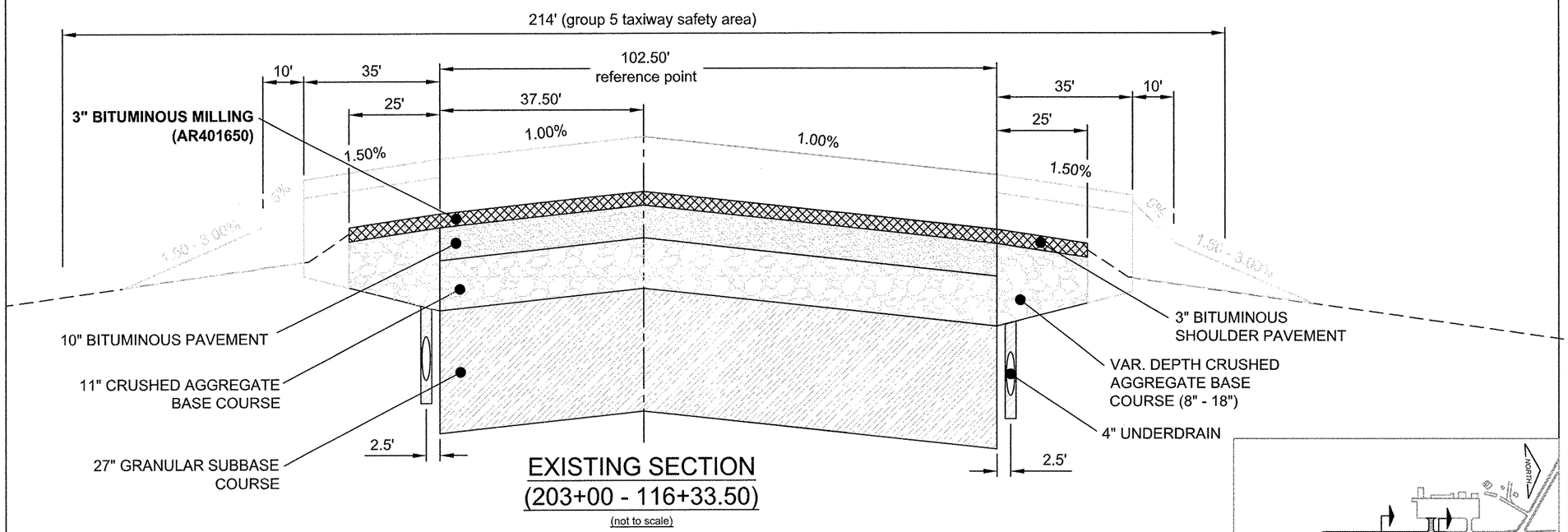

EXISTING SECTION
(203+00 - 116+33.50)
(not to scale)

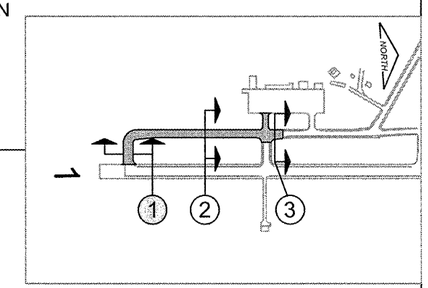

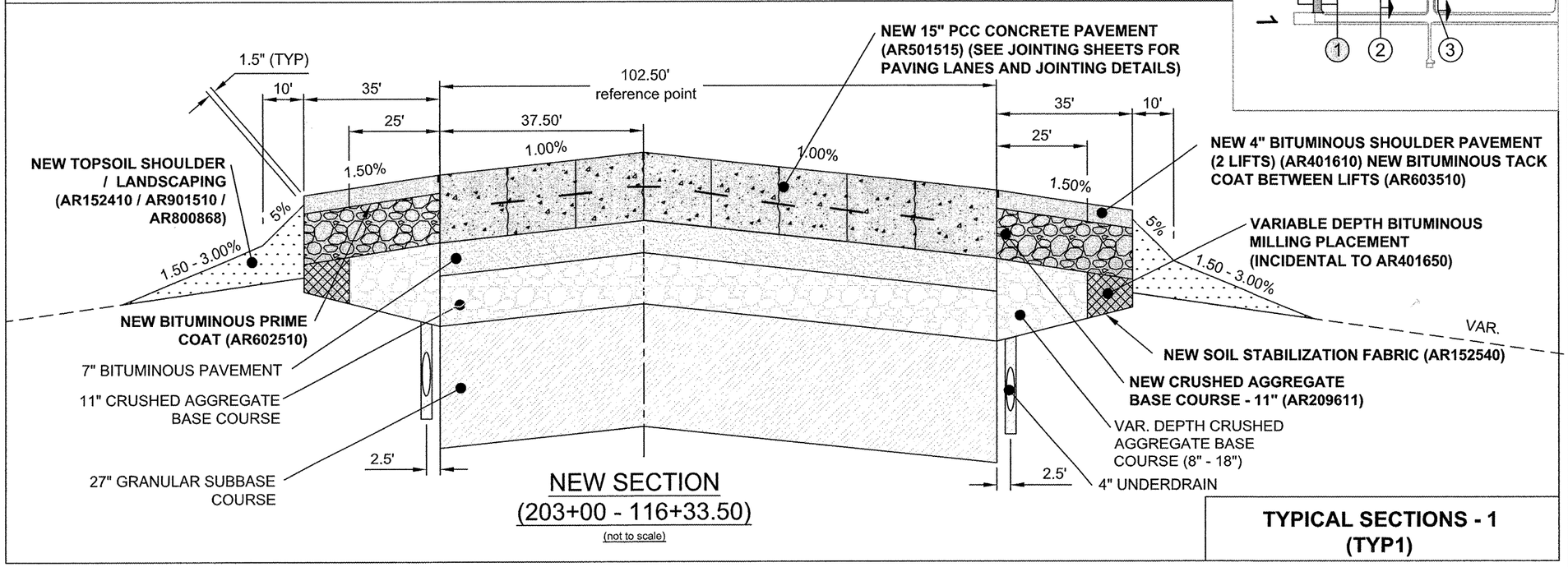

NEW SECTION
(203+00 - 116+33.50)
(not to scale)

TYPICAL SECTIONS - 1
(TYP1)

RO016

CMT
CRAWFORD, MURPHY & TILLY, INC.
CONSULTING ENGINEERS
Copyright CMT, Inc.

Chicago Rockford International Airport

FLYRFD.COM

Rockford, Illinois

Greater Rockford Airport Authority

AIP: 3-17-0088-XX
RFD-3862

Rehab. Txy B South (Phase 1)

Revisions

Date	Description

0 1
THIS BAR IS EQUAL TO 1" AT FULL SCALE (17 X 11).

DESIGN BY:	CMT- RFD
DRAWN BY:	CMT- RFD
CHECKED BY:	CMT- RFD
APPROVED BY:	JGP
DATE:	2-27-2009
JOB No:	06258-04-00

TYPICAL SECTIONS 1 (TYP1)

4