046

FAI RTE	SECTION	COUNTY	TOTAL SHEETS	SHEET NO
39	*	WOODFORD	27	1
		ILLINOIS CONTRACT NO. 68F48		

* 102[(2HVB)BR;HB-1;HB HB-2]BP

STATE OF ILLINOIS
DEPARTMENT OF TRANSPORTATION

D-94-038-20

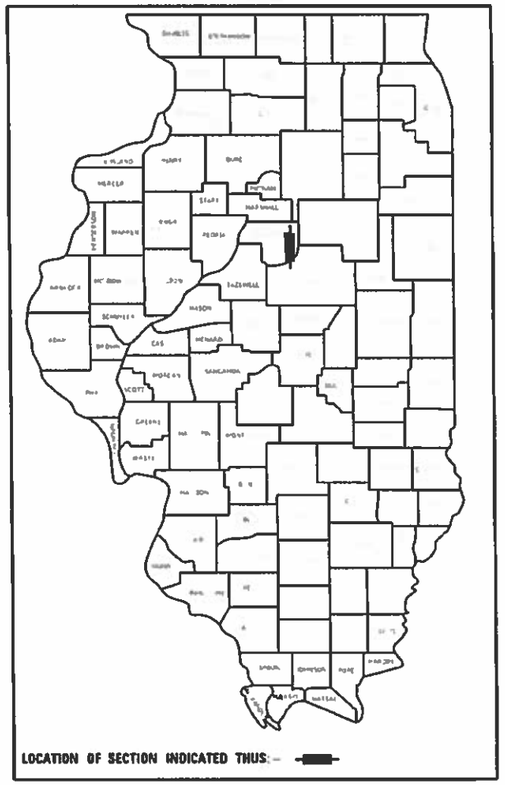

INDEX OF SHEETS

1. COVER SHEET
2. GENERAL NOTES
3–4 SUMMARY OF QUANTITIES
5–27 PLAN SHEETS

HIGHWAY STANDARDS

701001–02	701006–05
701101–05	701106–02
701201–05	701301–04
701400–09	701402–12
701451–05	701901–08
704001–08	

PROPOSED HIGHWAY PLANS

I–39 (FAI 39)
SECTION 102[(2HVB)BR;HB–1;HB;HB–2]BP
PROJECT NHPP–M4QN(653)
DESCRIPTION BRIDGE PAINTING
WOODFORD COUNTY

C–94–058–20

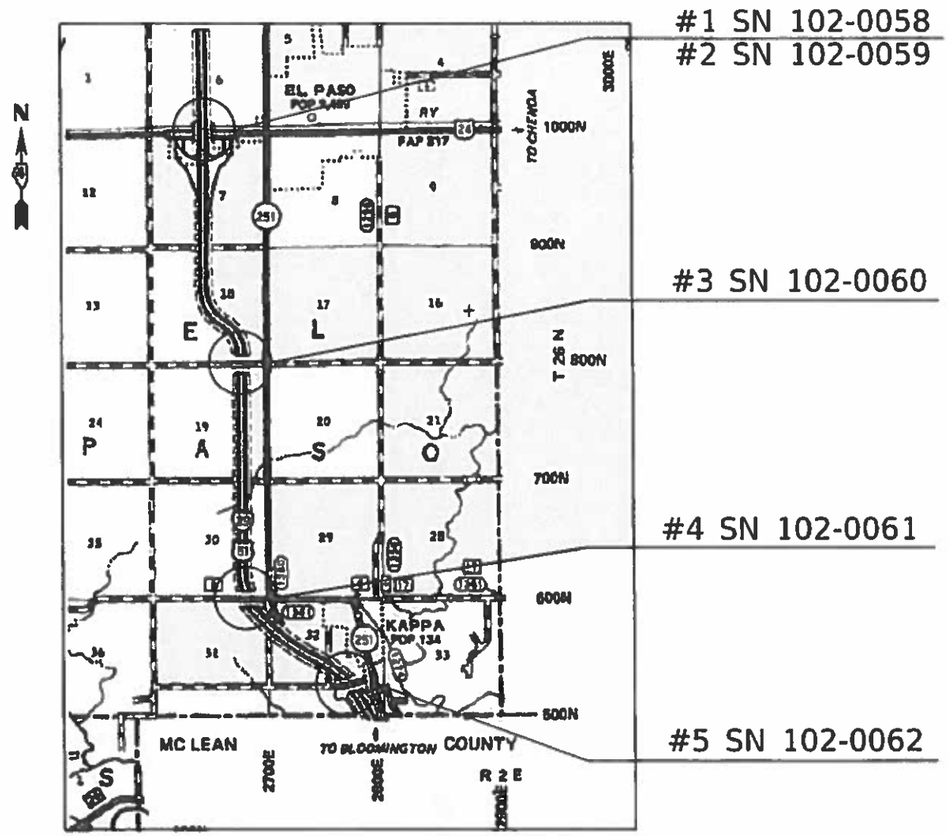

US 24
AADT
102–0058 & 102–0059 / AADT (2019) = 8,400 SU = 170 MU = 525

I–39
AADT
102–0058 / AADT (2017) = 9,250 SU = 325 MU = 3,397
102–0059 / AADT (2017) = 9,250 SU = 325 MU = 3,397
102–0060 / AADT (2017) = 18,500 SU = 650 MU = 5,200
102–0061 / ADDT (2017) = 18,500 SU = 650 MU = 5,200
102–0062 / AADT (2017) = 18,500 SU = 650 MU = 5,200

DESCRIPTION:
PAINTING OF STRUCTURES ALONG THE INTERSTATE 39 CORRIDOR IN WOODFORD COUNTY. SN 102–0058, 102–0059, 102–0060, 102–0061, AND 102–0062.

J.U.L.I.E.
JOINT UTILITY LOCATION INFORMATION FOR EXCAVATION
1–800–892–0123
OR 811

STATE OF ILLINOIS
DEPARTMENT OF TRANSPORTATION

SUBMITTED Jan 31 2020
Renee A Garnett RSD
REGIONAL ENGINEER

March 20 2020
ENGINEER OF DESIGN AND ENVIRONMENT

March 20 2020
DIRECTOR OF HIGHWAYS PROJECT IMPLEMENTATION 13

PROJECT ENGINEER ELIAS ELDERZI (309)671–3482
PROJECT MANAGER MIKE LEWIS (309)671–3454

CONTRACT NO. 68F48 CATALOG NO. 036031–00D

PRINTED BY THE AUTHORITY OF THE STATE OF ILLINOIS

COMMITMENTS

There are no Commitments for this project.

GENERAL NOTES

All painting shall be as specified in the Special Provision for "Cleaning and Painting Existing Steel Structures." All areas indicated on the plans shall be painted with the Paint System1-OZ/E/U. All beams, brackets and all other structural steel shall be cleaned per Near-White Metal Blast Cleaning SSPC-SP10,according to the following schedule:
Bridge Locations 1-5 the entire structures.

Bridge Locations 1-5. All fascia beams shall be Red Brown (Munsell No. 2.5YR 3/4) and the beams undersides shall be a Light Gray (Munsell 5B 7/1)

Air Monitors-
QP1 required for this project.

PROJECT SPECIFIC NOTE

Bridge Locations 3,4, and 5 have metal screen panels covering some of the bays between girders at the front wall of the abutments. The screen panels shall be removed prior to cleaning and painting operations. The screen panels and mounting hardware shall be disposed of by the contractor. This work will not be paid for separately, but will be considered included in the cost of the respective CLEANING AND PAINTING STRUCTURAL STEEL pay items.

Placement of Temporary Pavement Markings and the removal of Temporary Pavement Markings shall be considered as included in the cost of the Traffic Control & Protection payitems.

CONST. CODE
WOODFORD
90 / 10
FED / STATE
0047
RURAL

CODE NO.	ITEM	UNIT	TOTAL QUANTITY	
67100100	MOBILIZATION	L SUM	1	1
70100207	TRAFFIC CONTROL AND PROTECTION, STANDARD 701402	EACH	6	6
70100420	TRAFFIC CONTROL AND PROTECTION, STANDARD 701411	EACH	2	2
70100450	TRAFFIC CONTROL AND PROTECTION, STANDARD 701201	L SUM	1	1
70400500	TEMPORARY CONCRETE BARRIER (STATE OWNED)	FOOT	337.5	337.5
70400600	RELOCATE TEMPORARY CONCRETE BARRIER (STATE OWNED)	FOOT	2237.5	2237.5
70600250	IMPACT ATTENUATORS, TEMPORARY (NON-REDIRECTIVE), TEST LEVEL 3	EACH	1	1
70600350	IMPACT ATTENUATORS, RELOCATE (NON- REDIRECTIVE), TEST LEVEL 3	EACH	18	18
X5060601	CONTAINMENT AND DISPOSAL OF NON-LEAD PAINT CLEANING RESIDUES NO. 1	L SUM	1	1
X5060602	CONTAINMENT AND DISPOSAL OF NON-LEAD PAINT CLEANING RESIDUES NO. 2	L SUM	1	1
X5060603	CONTAINMENT AND DISPOSAL OF NON-LEAD PAINT CLEANING RESIDUES NO. 3	L SUM	1	1
X5060604	CONTAINMENT AND DISPOSAL OF NON-LEAD PAINT CLEANING RESIDUES NO. 4	L SUM	1	1
X5060605	CONTAINMENT AND DISPOSAL OF NON-LEAD PAINT CLEANING RESIDUES NO. 5	L SUM	1	1
Z0010501	CLEANING AND PAINTING STEEL BRIDGE NO. 1	L SUM	1	1

CONST. CODE
WOODFORD
90 / 10
FED / STATE
0047
RURAL

CODE NO.	ITEM	UNIT	TOTAL QUANTITY	
Z0010502	CLEANING AND PAINTING STEEL BRIDGE NO. 2	L SUM	1	1
Z0010503	CLEANING AND PAINTING STEEL BRIDGE NO. 3	L SUM	1	1
Z0010504	CLEANING AND PAINTING STEEL BRIDGE NO. 4	L SUM	1	1
Z0010505	CLEANING AND PAINTING STEEL BRIDGE NO. 5	L SUM	1	1
Z0048665	RAILROAD PROTECTIVE LIABILITY INSURANCE	L SUM	1	1

MODEL: Default
FILE NAME: pw:\\planrcom.dot.illinois.gov:PWIDOT\Documents\IDOT Offices\District 4\Projects\D4_68F48\CADData\CADsheets\D468F48-sht-details.dgn

USER NAME = everscl	DESIGNED -	REVISED -	
	DRAWN -	REVISED -	
PLOT SCALE = 100.0000 ' / in.	CHECKED -	REVISED -	
PLOT DATE = 1/31/2020	DATE -	REVISED -	

STATE OF ILLINOIS
DEPARTMENT OF TRANSPORTATION

SUMMARY OF QUANTITIES

F.A.I. RTE.	SECTION	COUNTY	TOTAL SHEETS	SHEET NO.
39	•	WOODFORD	27	4
		CONTRACT NO. 68F48		
	ILLINOIS	FED. AID PROJECT		

* 102[(2HVB)BR;HB-1;HB;HB-2]BP

SN 102-0058 & 102-0059
I-39 OVER US 24

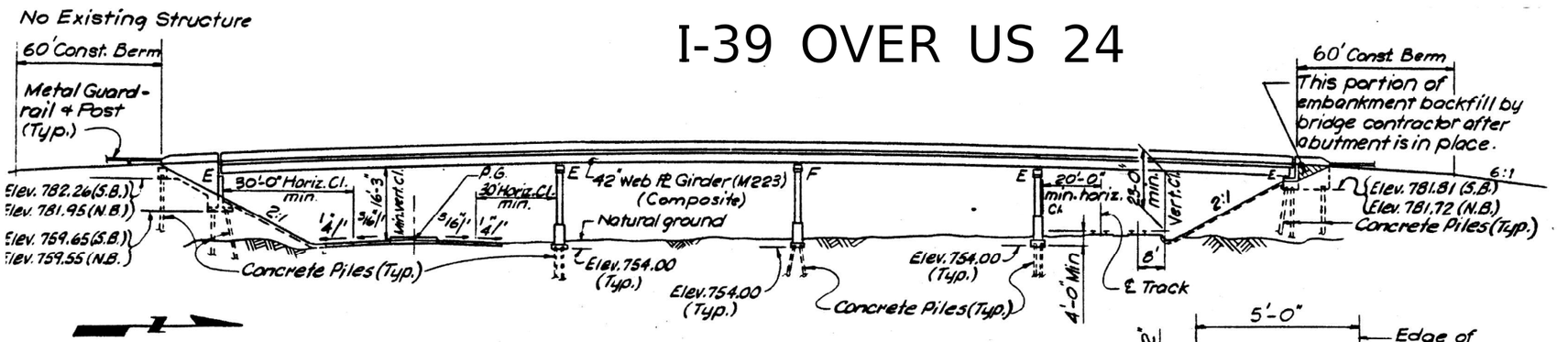

ELEVATION

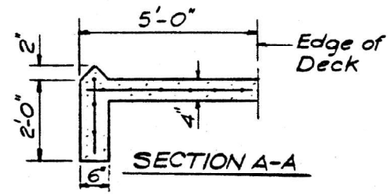

SECTION A-A

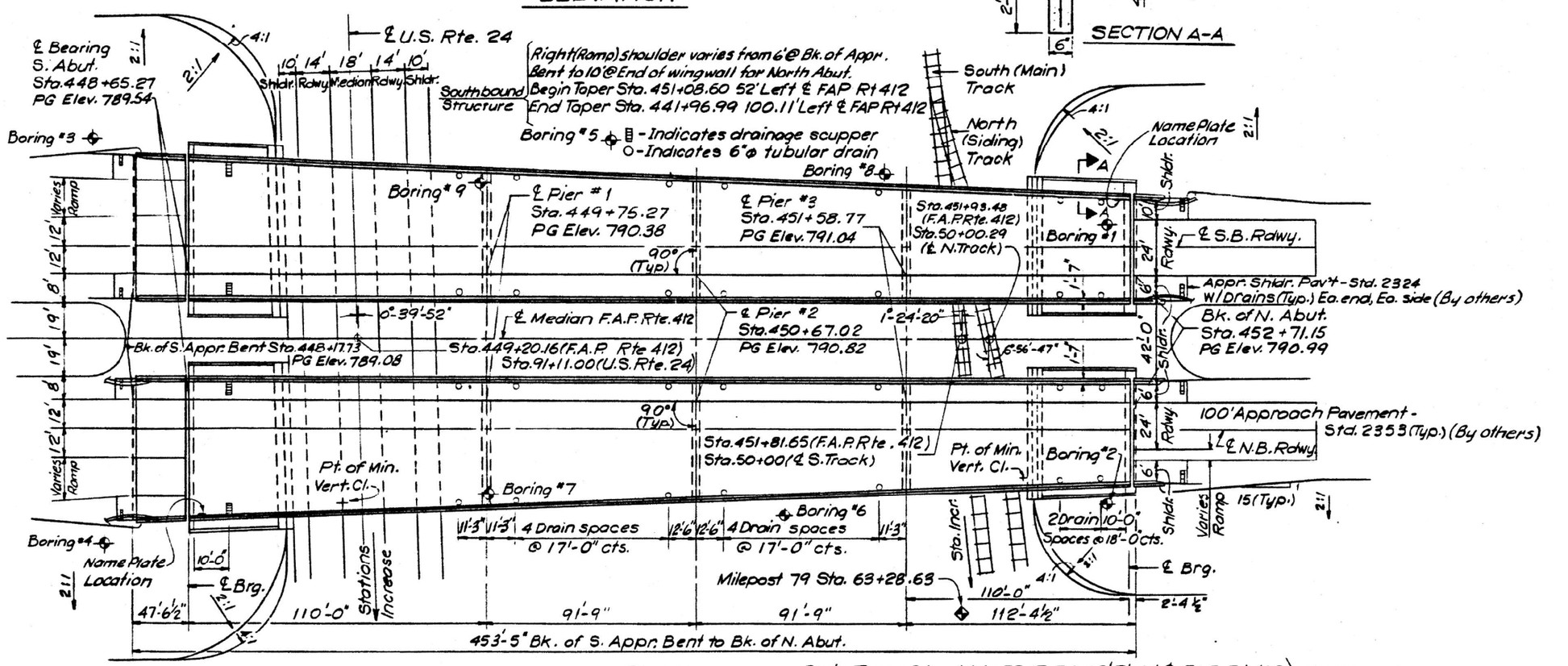

PLAN

Begin Taper Sta. 444+59.17 76.03' Right ℄ FAP Rt 412.
End Taper Sta. 456+60.51 52' Right ℄ FAP Rt 412.
Northbound Structure

FOR INFORMATION ONLY

MODEL: Default
FILE NAME: pw:\\pwbroom.dot.illinois.gov:PWIDOT\Documents\IDOT Offices\District 4\Projects\D4_68F48\CADData\CADsheets\D468F48-sh-details.dgn

USER NAME = recendezr	DESIGNED -	REVISED -	
	DRAWN -	REVISED -	
PLOT SCALE = 2.0000 ' / in.	CHECKED -	REVISED -	
PLOT DATE = 1/3/2020	DATE -	REVISED -	

STATE OF ILLINOIS
DEPARTMENT OF TRANSPORTATION

PLAN AND ELEVATION VIEW

SCALE: | SHEET OF SHEETS | STA. TO STA.

F.A.I. RTE.	SECTION	COUNTY	TOTAL SHEETS	SHEET NO.
39	*	WOODFORD	27	5
		CONTRACT NO. 68F48		
	ILLINOIS	FED. AID PROJECT		

*102[(2HVB)BR;HB-1;HB;HB-2]BP

SN 102-0058
SB I-39 OVER US 24

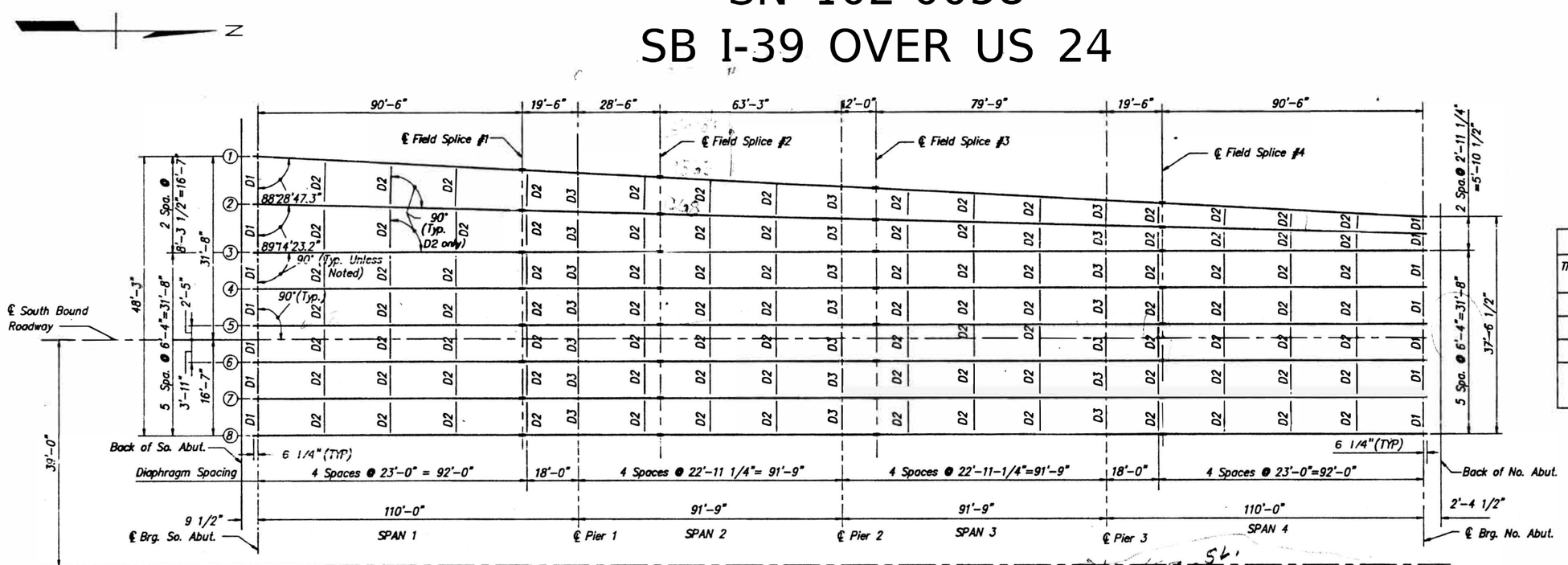

FRAMING PLAN
(SOUTH BOUND LANES)

FILLET WELD SIZE TABLE	
Thickness of Thicker Part Joined	* Minimum Size of Fillet Weld
1/2" or less	3/16"
Over 1/2" to 3/4"	1/4"
Over 3/4"	5/16"
*Weld size need not exceed the thickness of the thinner part joined.	

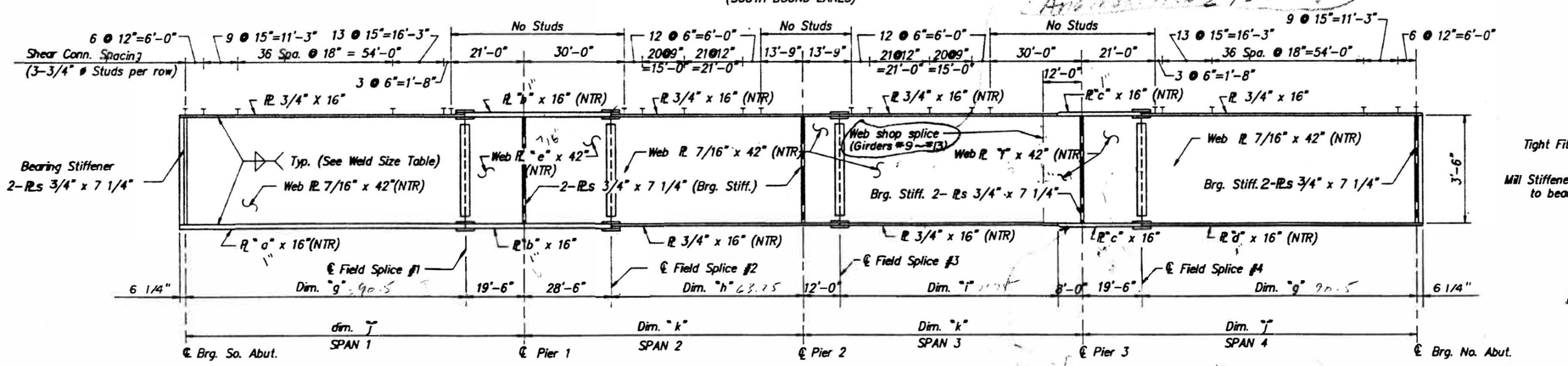

GIRDER ELEVATION
(ALL GIRDERS, #1 THRU #16)

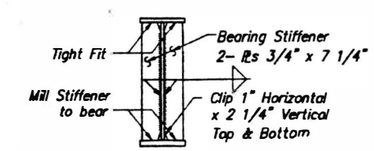

SECTION AT BRG. STIFFENERS

FOR INFORMATION ONLY

MODEL: Default
FILE NAME: pw:\\pwmainroom.dot.illinois.gov:PWIDOT\Documents\IDOT Offices\District 4\Projects\D4 68F48\CADData\CADsheets\D468F48-sht-details.dgn

USER NAME = recendezr	DESIGNED -	REVISED -	STATE OF ILLINOIS DEPARTMENT OF TRANSPORTATION	FRAMING VIEW			F.A.I RTE.	SECTION	COUNTY	TOTAL SHEETS	SHEET NO.
	DRAWN -	REVISED -					39	*	WOODFORD	27	6
PLOT SCALE = 2.0000 ' / in.	CHECKED -	REVISED -							CONTRACT NO. 68F48		
PLOT DATE = 1/3/2020	DATE -	REVISED -		SCALE:	SHEET OF SHEETS	STA. TO STA.			ILLINOIS FED. AID PROJECT		

*102[(2HVB)BR;HB-1;HB;HB-2]BP

SN 102-0059
NB I-39 OVER US 24

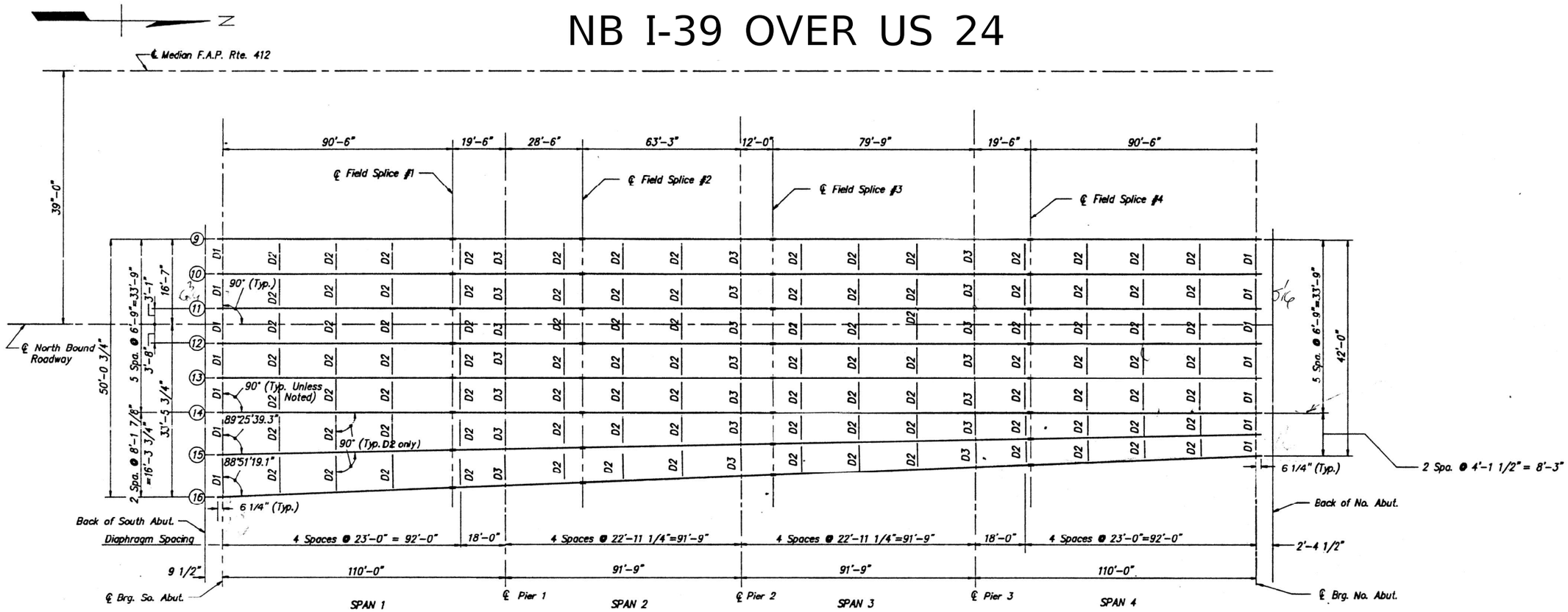

FRAMING PLAN
(NORTH BOUND LANES)

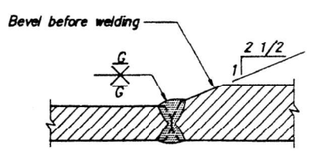

GIRDER FLANGE SHOP WELD

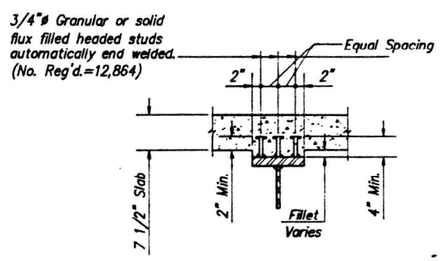

SHEAR STUDS

PLATE THICKNESS & DIMENSION TABLE											
Girder	"a"	"b"	"c"	"d"	"e"	"f"	"g"	"h"	"i"	"j"	"k"
#1	1 1/4"	1 1/8"	7/8"	7/8"	1/2"	7/16"	90'-6 7/16"	63'-3 3/8"	71'-9 3/8"	110'-0 7/16"	91'-9 3/8"
#2							90'-6 1/8"	63'-3 1/8"	71'-9 1/8"	110'-0 1/8"	91'-9 1/8"
#3							90'-6"	63'-3"	71'-9"	110'-0"	91'-9"
#4-#8	1"	1"	1"	1"	7/16"	7/16"	90'-6"	63'-3"	71'-9"	110'-0"	91'-9"
#9-#13					1/2"	1/2"	90'-6"	63'-3"	71'-9"	110'-0"	91'-9"
#14	1 1/4"	1 1/8"	7/8"	7/8"	1/2"	7/16"	90'-6"	63'-3"	71'-9"	110'-0"	91'-9"
#15							90'-6 1/16"	63'-3 1/16"	71'-9 1/16"	110'-0 1/16"	91'-9 1/16"
#16							90'-6 1/4"	63'-3 1/4"	71'-9 1/4"	110'-0 1/4"	91'-9 1/4"

FOR INFORMATION ONLY

MODEL: Default
FILE NAME: pw:\\ubinoom.dot.illinois.gov:PWIDOT\Documents\IDOT Offices\District 4\Projects\D4_68F48\CADData\CADsheets\D468F48-sht-details.dgn

USER NAME = recenderr	DESIGNED -	REVISED -	STATE OF ILLINOIS DEPARTMENT OF TRANSPORTATION
	DRAWN -	REVISED -	
PLOT SCALE = 2.0000 ' / in.	CHECKED -	REVISED -	
PLOT DATE = 1/3/2020	DATE -	REVISED -	

FRAMING VIEW

SCALE: SHEET OF SHEETS STA. TO STA.

F.A.I RTE.	SECTION	COUNTY	TOTAL SHEETS	SHEET NO.
39	*	WOODFORD	27	7
		CONTRACT NO. 68F48		
	ILLINOIS	FED. AID PROJECT		

*102[(2HVB)BR;HB-1;HB;HB-2]BP

SN 102-0058 & 102-0059
I-39 OVER US 24

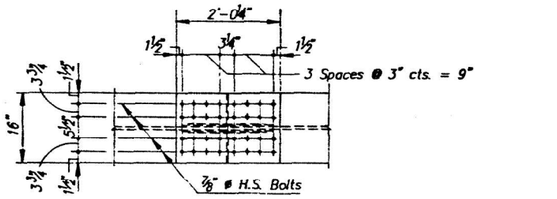

TOP FLANGE

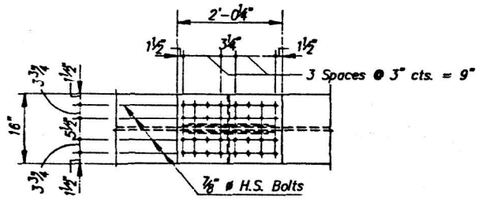

TOP FLANGE

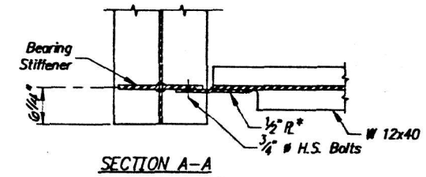

SECTION A-A

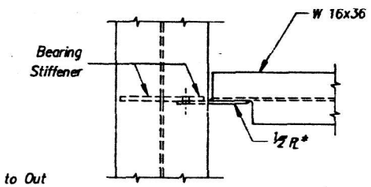

SECTION C-C

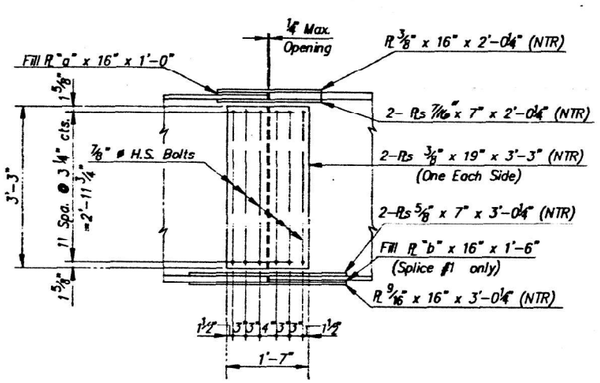

GIRDER ELEVATION
(Splices #1 & #4)

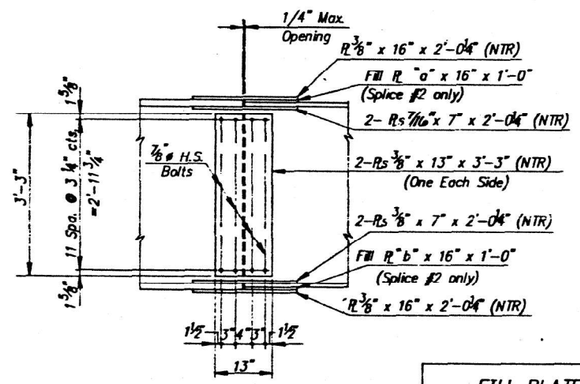

GIRDER ELEVATION
(Splices #2 & #3)

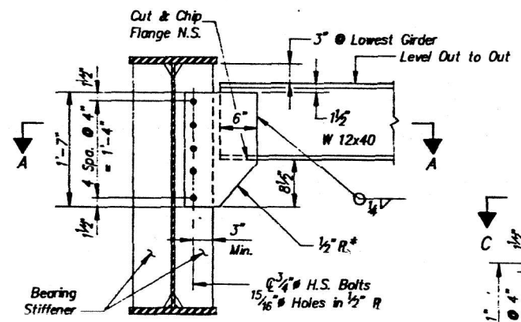

DIAPHRAGM D1
(28 Required)

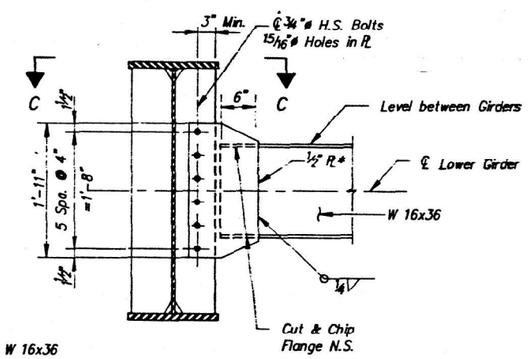

DIAPHRAGM D3
(42 Required)

FILL PLATE THICKNESS TABLE						
Girder No.	Splice #1		Splice #2		Splice #4	
	"a"	"b"	"a"	"b"	"a"	"b"
1-3, 14-16	3/8"	1/8"	3/8"	3/8"	1/8"	–
4-13	1/4"	–	1/4"	1/4"	1/4"	–

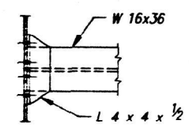

SECTION B-B

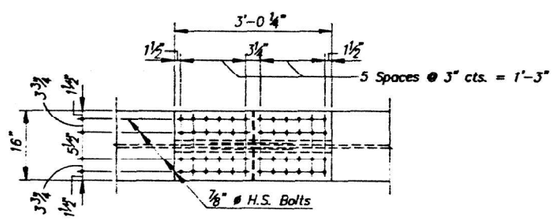

BOTTOM FLANGE

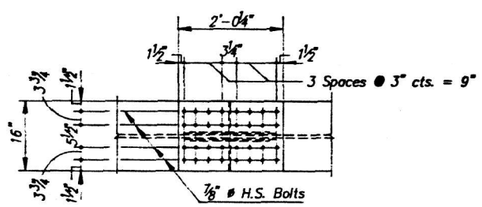

BOTTOM FLANGE

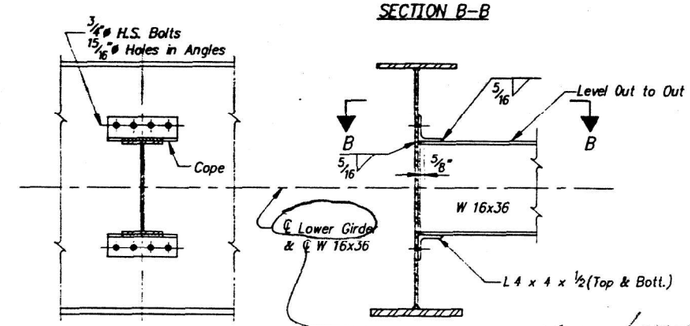

SL 3/25/09
Use Lipps 3001 or
in Low Girders

DIAPHRAGM D2
(196 Required)

* Use ½" bent PL for Girders #1, #2, #15 & #16.

FOR INFORMATION ONLY

USER NAME = recendezr	DESIGNED -	REVISED -	
	DRAWN -	REVISED -	
PLOT SCALE = 2.0000 ' / in.	CHECKED -	REVISED -	
PLOT DATE = 1/3/2020	DATE -	REVISED -	

STATE OF ILLINOIS
DEPARTMENT OF TRANSPORTATION

STRUCTURAL STEEL DETAILS

SCALE: | SHEET OF SHEETS | STA. TO STA.

F.A.I RTE.	SECTION	COUNTY	TOTAL SHEETS	SHEET NO.
39	*	WOODFORD	27	8
		CONTRACT NO. 68F48		
	ILLINOIS	FED. AID PROJECT		

*102[(2HVB)BR;HB-1;HB;HB-2]BP

MODEL: Default
FILE NAME: pw:\\uhbnroom.dot.illinois.gov:PWIDOT\Documents\IDOT Offices\District 4\Projects\D4_68F48\CADData\CADsheets\D468F48-sht-details.dgn

SN 102-0058 & 102-0059
I-39 OVER US 24

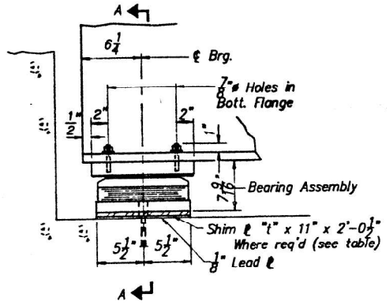

ELEVATION

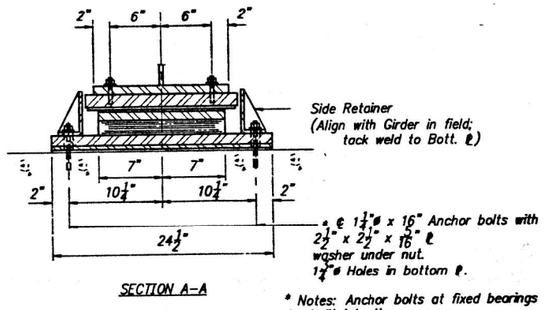

SECTION A-A

* Notes: Anchor bolts at fixed bearings may be built into the masonry. See sheet #30 for Anchor Bolt installation.

TYPE II ELASTOMERIC EXP. BRG. AT ABUTS.
(32 Required)

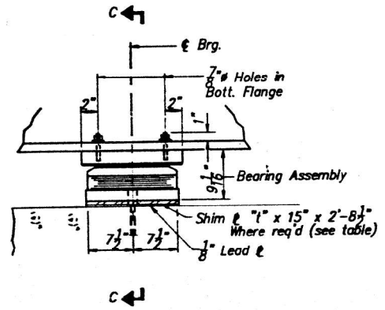

ELEVATION

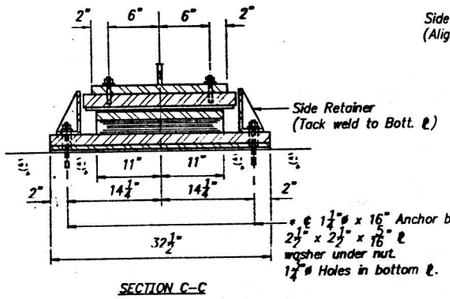

SECTION C-C

TYPE II ELASTOMERIC EXP. BRG. AT PIERS 1 & 3
(32 Required)

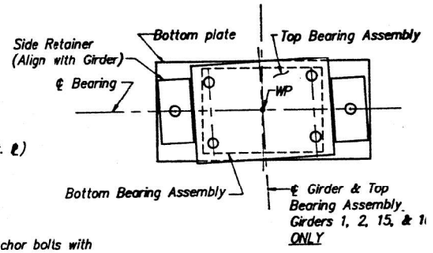

ELASTOMERIC BEARING ASSEMBLY DETAIL
(Girders 3 – 8 & 9 – 14 are 90° to Piers or Abutments)

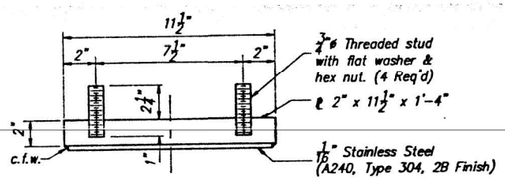

TOP BEARING ASSEMBLY AT ABUTS.

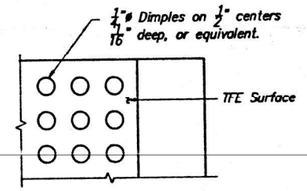

PLAN-TFE SURFACE

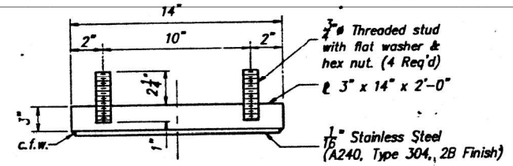

TOP BEARING ASSEMBLY AT PIERS 1 & 3

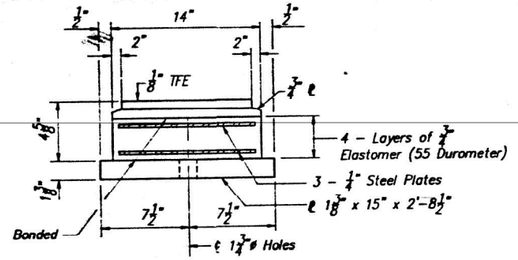

BOTTOM BEARING ASSEMBLY AT PIERS 1 & 3

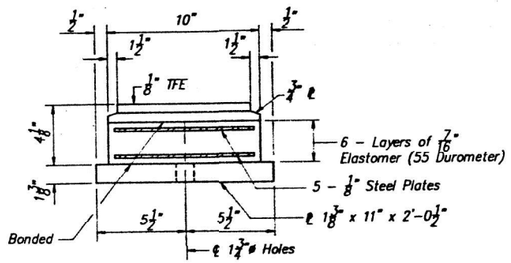

BOTTOM BEARING ASSEMBLY AT ABUTS.

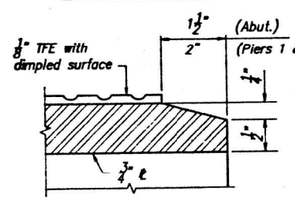

SECTION THRU TFE

Note: The ⅛" TFE steel shall be bonded directly to the top steel plate with a two-component, medium viscosity epoxy resin, conforming to the requirements of the Federal Specification MMM-A-134, Type I. The bond agent shall be applied on the full area of the contact surfaces.

Bonding of ⅛" TFE sheet during vulcanizing process will be permitted provided the process and method of adjusting assembly height is approved by the Engineer.

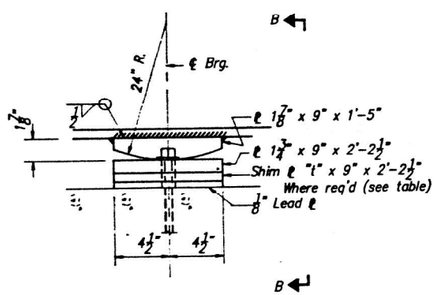

ELEVATION AT PIER 2

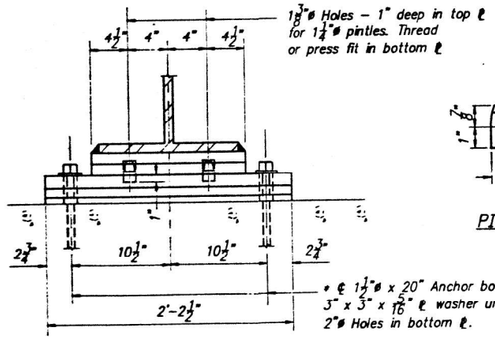

SECTION B-B

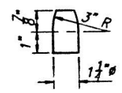

PINTLE

FIXED BEARING

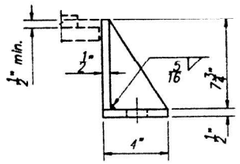

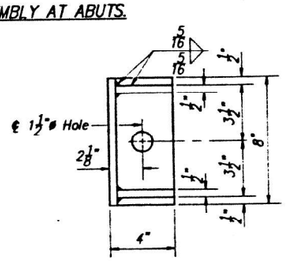

SIDE RETAINER

Equivalent rolled angle with stiffeners will be allowed in lieu of welded plates.

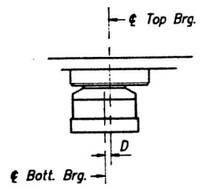

BELOW 50°F
(Move bott. brg. away from fixed brg.)

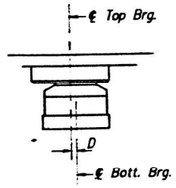

ABOVE 50°F
(Move bott. brg. toward fixed brg.)

SHIM PLATE TABLE

Girder	Dimension "t"				
	S. Abut.	N. Abut.	Pier 1	Pier 2	Pier 3
5	1/4"	1/4"	1/4"	1/4"	1/4"
11	1/8"	1/8"	1/8"	1/8"	1/8"

BILL OF MATERIAL

Item	Unit	Total
Elastomeric Bearing Assembly Type II	Each	64

FOR INFORMATION ONLY

MODEL: Default
FILE NAME: pw:\\pwinoom.dot.illinois.gov:PWIDOT\Documents\IDOT Offices\District 4\Projects\D4_68F48\CADData\CADsheets\D468F48-sht-details.dgn

USER NAME = recendezr	DESIGNED -	REVISED -	STATE OF ILLINOIS DEPARTMENT OF TRANSPORTATION
	DRAWN -	REVISED -	
PLOT SCALE = 2.0000 ' / in.	CHECKED -	REVISED -	
PLOT DATE = 1/3/2020	DATE -	REVISED -	

BEARING DETAILS

SCALE: SHEET OF SHEETS STA. TO STA.

F.A.I RTE.	SECTION	COUNTY	TOTAL SHEETS	SHEET NO.
39	*	WOODFORD	27	9
		CONTRACT NO. 68F48		
	ILLINOIS	FED. AID PROJECT		

*102[(2HVB)BR;HB-1;HB;HB-2]BP

SN 102-0060
TR 207 OVER I-39

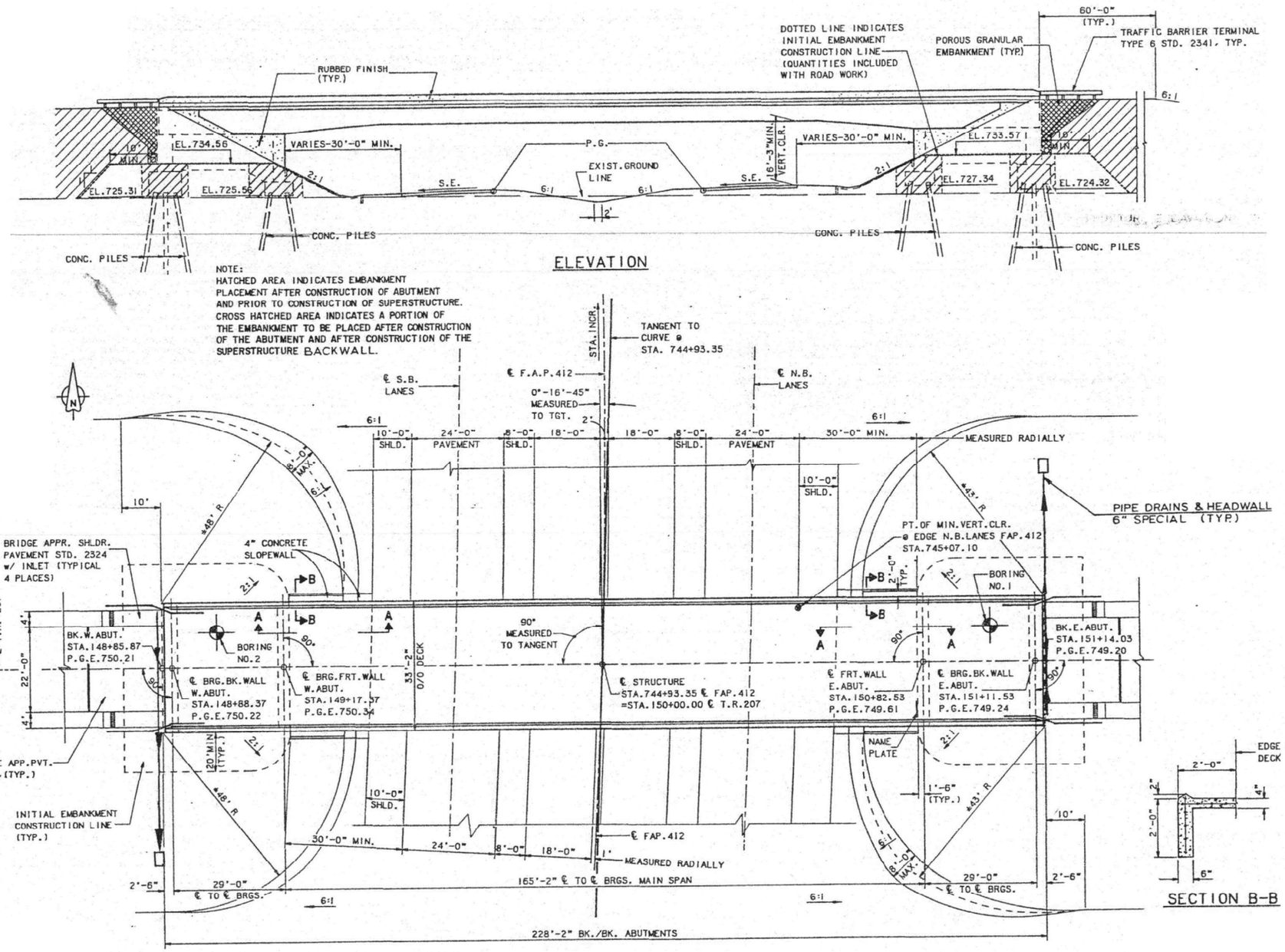

FOR INFORMATION ONLY

USER NAME = recendezr	DESIGNED -	REVISED -	STATE OF ILLINOIS DEPARTMENT OF TRANSPORTATION
	DRAWN -	REVISED -	
PLOT SCALE = 2.0000 ' / in.	CHECKED -	REVISED -	
PLOT DATE = 1/3/2020	DATE -	REVISED -	

PLAN AND ELEVATION VIEW

SCALE: SHEET OF SHEETS STA. TO STA.

F.A.I RTE.	SECTION	COUNTY	TOTAL SHEETS	SHEET NO.
39	*	WOODFORD	27	10

CONTRACT NO. 68F48

ILLINOIS FED. AID PROJECT

*102[(2HVB)BR;HB-1;HB;HB-2]BP

MODEL: Default
FILE NAME: pw:\\dbroom.dot.illinois.gov:PWIDOT\Documents\IDOT Offices\District 4\Projects\D4_68F48\CADData\CADsheets\D468F48-sh-details.dgn

SN 102-0060
TR 207 OVER I-39

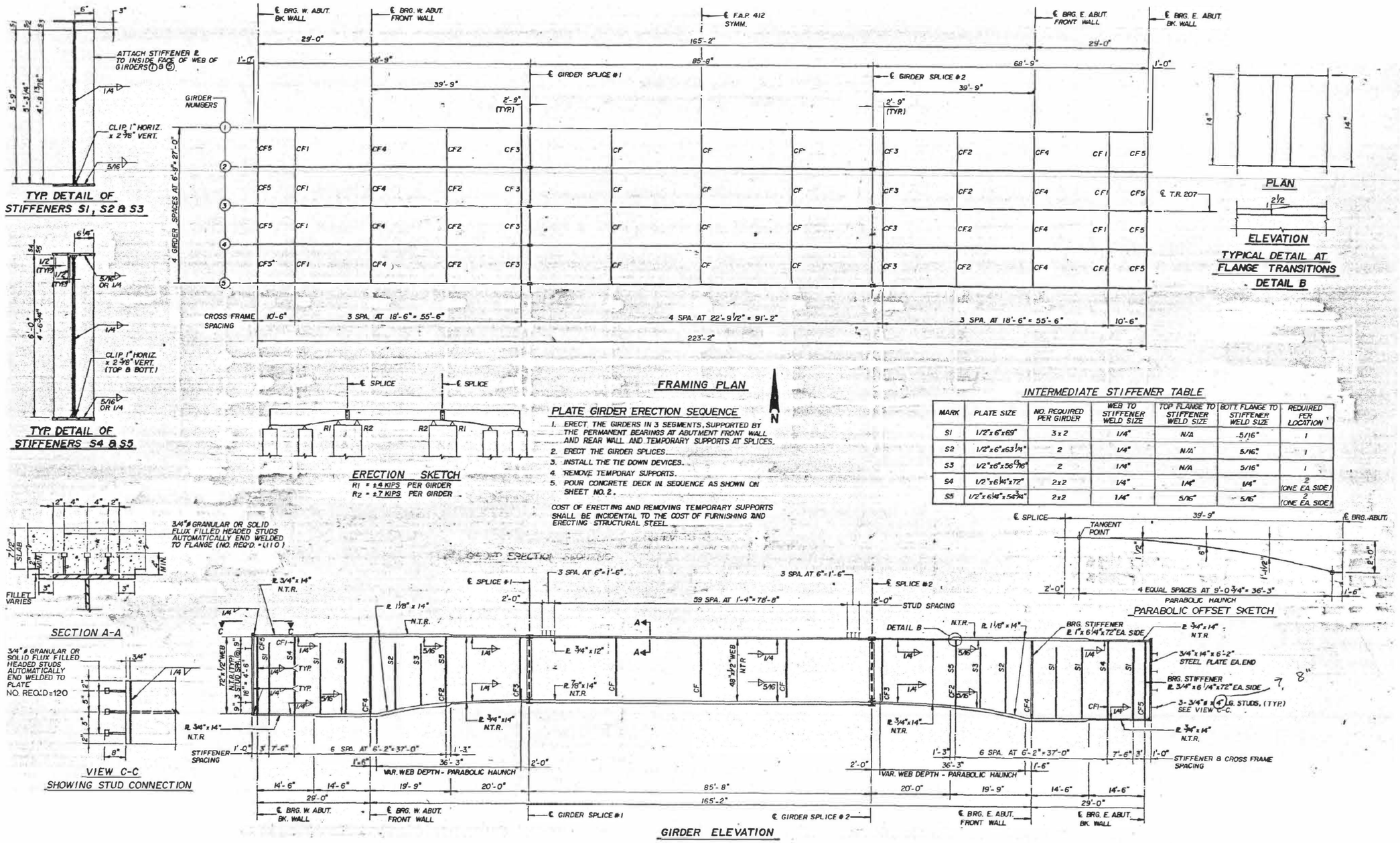

MARK	PLATE SIZE	NO. REQUIRED PER GIRDER	WEB TO STIFFENER WELD SIZE	TOP FLANGE TO STIFFENER WELD SIZE	BOTT. FLANGE TO STIFFENER WELD SIZE	REQUIRED PER LOCATION
S1	1/2"x6"x69"	3x2	1/4"	N/A	5/16"	1
S2	1/2"x6"x63 1/4"	2	1/4"	N/A	5/16"	1
S3	1/2"x6"x56 13/16"	2	1/4"	N/A	5/16"	1
S4	1/2"x6 1/4"x72"	2x2	1/4"	1/4"	1/4"	2 (ONE EA. SIDE)
S5	1/2"x6 1/4"x54 3/4"	2x2	1/4"	5/16"	5/16"	2 (ONE EA. SIDE)

FOR INFORMATION ONLY

MODEL: Default
FILE NAME: pw:\\plainroom.dot.illinois.gov:PWIDOT\Documents\IDOT Offices\District 4\Projects\D4 68F48\CADData\CADsheets\D468F48-sht-details.dgn

USER NAME = recendezr	DESIGNED -	REVISED -	
	DRAWN -	REVISED -	
PLOT SCALE = 2.0000 ' / in.	CHECKED -	REVISED -	
PLOT DATE = 1/3/2020	DATE -	REVISED -	

STATE OF ILLINOIS
DEPARTMENT OF TRANSPORTATION

FRAMING VIEW

SCALE: | SHEET OF SHEETS | STA. TO STA.

F.A.I RTE.	SECTION	COUNTY	TOTAL SHEETS	SHEET NO.
39	*	WOODFORD	27	11

CONTRACT NO. 68F48
ILLINOIS | FED. AID PROJECT

*102[(2HVB)BR;HB-1;HB;HB-2]BP

SN 102-0060
TR 207 OVER I-39

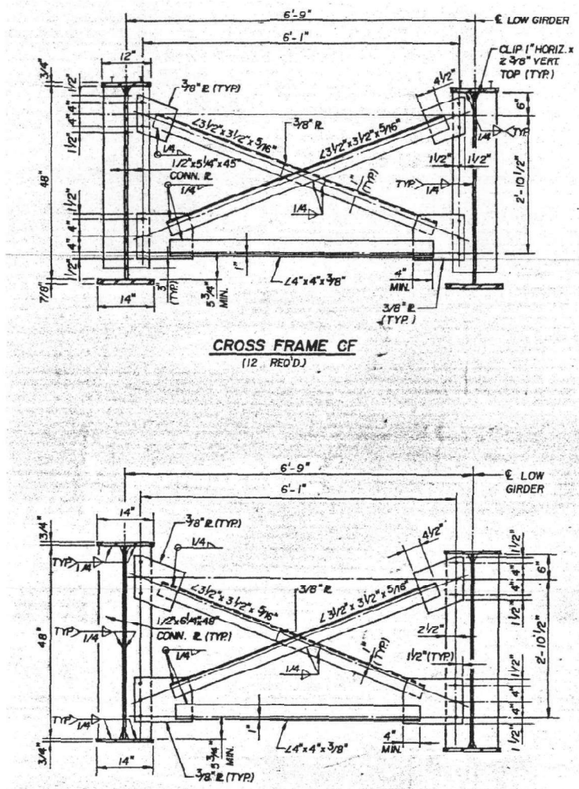

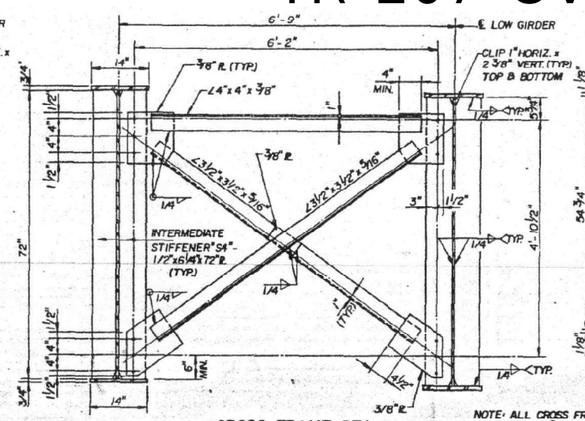

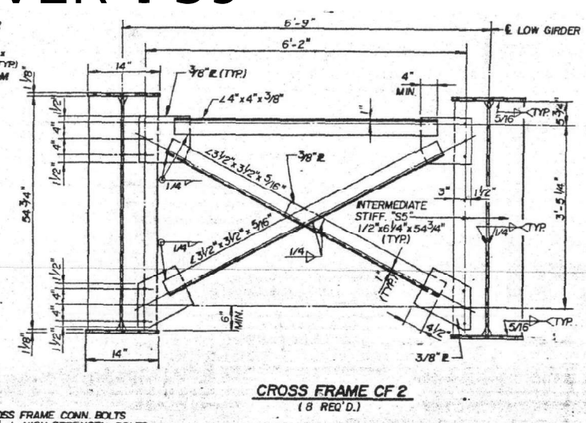

NOTE: ALL CROSS FRAME CONN. BOLTS ARE 3/4" ø HIGH STRENGTH BOLTS IN 15/16" ø HOLES. HARDENED WASHERS REQ'D. OVER ALL HOLES IN CROSS FRAME CONNECTIONS.

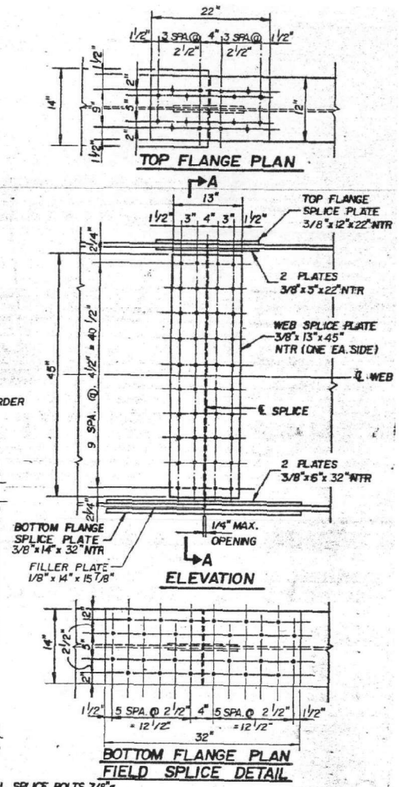

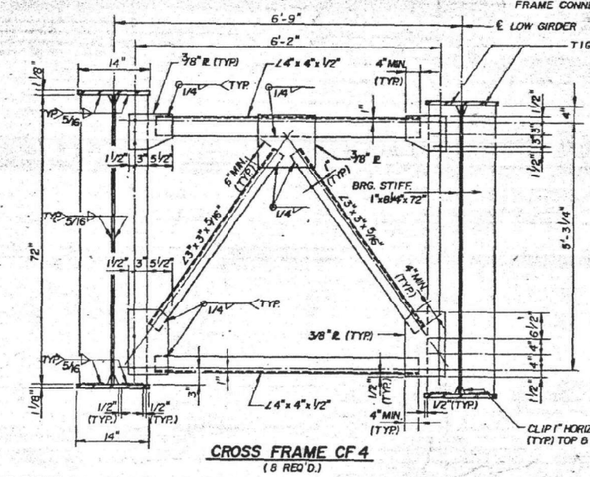

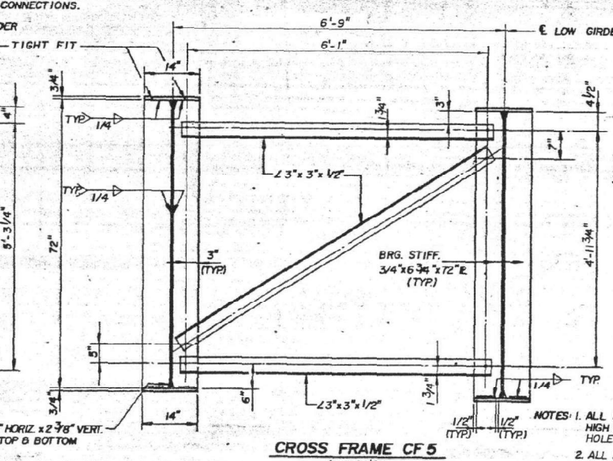

NOTE: THESE CROSS FRAMES MAY BE REMOVED AFTER BACK WALL IS IN PLACE.

NOTES:
1. ALL SPLICE BOLTS 7/8" ø HIGH STRENGTH BOLTS IN 15/16" ø HOLES.
2. ALL SPLICE MATERIAL IS AASHTO M223, GRADE 50 STEEL.
3. NTR DESIGNATES NOTCH TOUGHNESS REQUIREMENT.

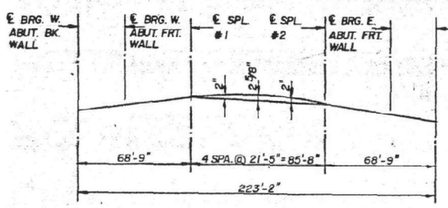

CAMBER DIAGRAM

MOMENT TABLE: Symmetrical Composite 3 Span.
(Composite in Positive Moment Area Only)

INTERIOR GIRDER MOMENT TABLE			
	0.5 Sp. 1	Abut. Frt. Wall	0.5 Sp. 2
Is (in4)	43,339	57,663	17,131
Ic (in4)			43,087
Ss (in3)	1,179	1,553	741
Sc (in3)			1,037
℄ (K/I)	0.860	0.860	0.820
M℄ ('K)	929	2,046	787
s℄ (K/I)	0.310	0.290	0.310
Ms℄ ('K)	317	700	371
ML℄ ('K)	535	1,084	845
M imp. ('K)	161	244	145
5/3 (ML + I) ('K)	1,160	2,213	1,650
Mo ('K)	3,128	6,447	3,650
fs ℄ non-comp. (ksi)	9.5	15.8	12.7
fs ℄ comp (ksi)	3.2	5.4	4.3
fs 5/3 (L + I) (ksi)	11.8	17.1	19.1
fs (Overload) (ksi)	24.5	38.3	36.1
fs (Total) (ksi)	31.8	49.8	46.9
VR (K)			45.7

INTERIOR GIRDER REACTION TABLE		
	Abut. Bk. Wall	Abut. Frt. Wall
R℄ (K)	-77.3	208.1
RL (K)	-40.8	102.3
Imp. (K)	-12.2	17.6
R Total (K)	-130.3	328.0

TOP OF WEB ELEVATIONS

LOCATION	℄ BRG. W. ABUT. BK. WALL	℄ BRG. W. ABUT. FRT. WALL	SPLICE # 1	SPLICE # 2	℄ BRG. E. ABUT. FRT. WALL	℄ BRG. E. ABUT. BK. WALL
GIRDER 1	749.02	749.23	749.52	749.14	748.50	748.04
GIRDER 2	749.13	749.34	749.63	749.25	748.61	748.15
GIRDER 3	749.24	749.45	749.74	749.36	748.72	748.26
GIRDER 4	749.13	749.34	749.63	749.25	748.61	748.15
GIRDER 5	749.02	749.23	749.52	749.14	748.50	748.04

ELEVATIONS ABOVE ARE TOP OF GIRDER WEB BEFORE ANY DEFLECTIONS, TO BE USED FOR FABRICATION ONLY.

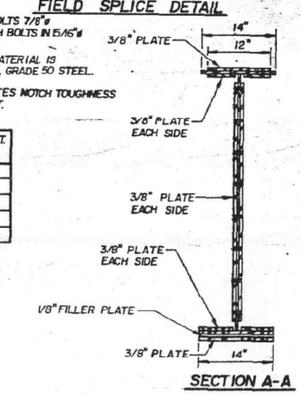

FOR INFORMATION ONLY

USER NAME = recendezr	DESIGNED -	REVISED -	
	DRAWN -	REVISED -	
PLOT SCALE = 2.0000 ' / in.	CHECKED -	REVISED -	
PLOT DATE = 1/3/2020	DATE -	REVISED -	

STATE OF ILLINOIS
DEPARTMENT OF TRANSPORTATION

CROSS FRAMES & GIRDERS DETAILS

SCALE: | SHEET OF SHEETS | STA. TO STA.

F.A.I. RTE.	SECTION	COUNTY	TOTAL SHEETS	SHEET NO.
39	*	WOODFORD	27	12
		CONTRACT NO. 68F48		
	ILLINOIS	FED. AID PROJECT		

*102[(2HVB)BR;HB-1;HB;HB-2]BP

MODEL: Default
FILE NAME: pw:\\uhnroom.dot.illinois.gov:PWIDOT\Documents\IDOT Offices\District 4\Projects\D4_68F48\CADData\CADsheets\D468F48-sh-details.dgn

SN 102-0060
TR 207 OVER I-39

STANDARD CONSTRUCTION:

1. MESH: 1 1/2" DIAMOND
2. WIRE: NO. 10 WASHBURN & MOEN GUAGE (INCLUDES COATING)
3. FRAME: 3/8" ROUND ROD

ALL MATERIALS TO BE GALVANIZED.

TWO WIRE-MESHED FRAMES SHALL BE PROVIDED FOR EACH SCREEN PANEL.

FOUR TABS SHALL BE PROVIDED FOR EACH WIRE-MESHED FRAME.

NOTES:

1. ℄ INDICATES STANDARD GAGE FOR ANGLES.
2. CLIPS SHALL BE PROVIDED FOR PERMANENT SCREEN PANELS.
3. ONE ACCESSIBLE SCREEN PANEL SHALL BE PROVIDED AT EACH FRONT ABUTMENT.
4. PROVIDE HINGED TABS AT CONNECTIONS TO THE CONNECTION PLATES FOR THE ACCESSIBLE SCREEN PANEL ONLY.

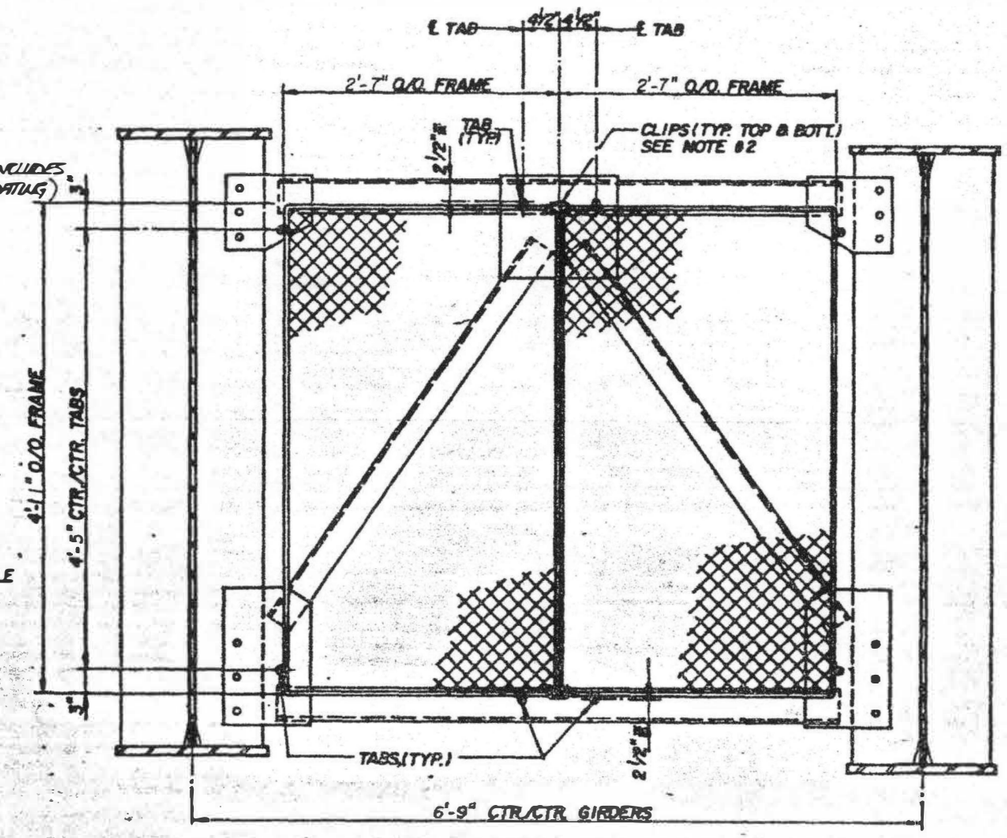

ERECTION SEQUENCE FOR SCREEN PANELS

1. PERMANENT
   a. FIELD CONNECT THE TWO WIRE-MESHED FRAMES WITH A CLIP TYPE CONNECTION.
   b. FIELD DRILL HOLES AT THE CONNECTION PLATES AND ANGLES OF THE DIAPHRAGMS TO MATCH THE LOCATION OF THE TABS.
   c. USE HIGH STRENGTH BOLTS.
   d. THE BOLTS SHALL BE DRAWN UP TIGHT AND THE THREADS BURRED AT THE FACE OF THE NUT WITH A POINTED TOOL.
2. ACCESSIBLE
   SEQUENCE SIMILAR TO PERMANENT SCREEN PANELS WITH EXCEPTION TO PROVIDING A CLIP TYPE CONNECTION.

TYPICAL SCREEN PANEL @ ABUTMENT FRONT WALL

NOTE:

SCREEN PANELS TO BE MOUNTED ON CROSS FRAME CF-4 AT ℄ OF BEARING OF ABUTMENT FRONT WALL. SEE SHEET 7 FOR DETAILS OF CROSS FRAME.

FOR INFORMATION ONLY

MODEL: Default
FILE NAME: pw:\\planroom.dot.illinois.gov:PWIDOT\Documents\IDOT Offices\District 4\Projects\D4_68F48\CADData\CADsheets\D468F48-sht-details.dgn

USER NAME = recendezr	DESIGNED -	REVISED -	
	DRAWN -	REVISED -	
PLOT SCALE = 2.0000 ' / in.	CHECKED -	REVISED -	
PLOT DATE = 1/3/2020	DATE -	REVISED -	

STATE OF ILLINOIS
DEPARTMENT OF TRANSPORTATION

SCREEN PANEL DETAILS

SCALE: SHEET OF SHEETS STA. TO STA.

F.A.I RTE.	SECTION	COUNTY	TOTAL SHEETS	SHEET NO.
39	*	WOODFORD	27	13
		CONTRACT NO. 68F48		
	ILLINOIS	FED. AID PROJECT		

*102[(2HVB)BR;HB-1;HB;HB-2]BP

SN 102-0060
TR 207 OVER I-39

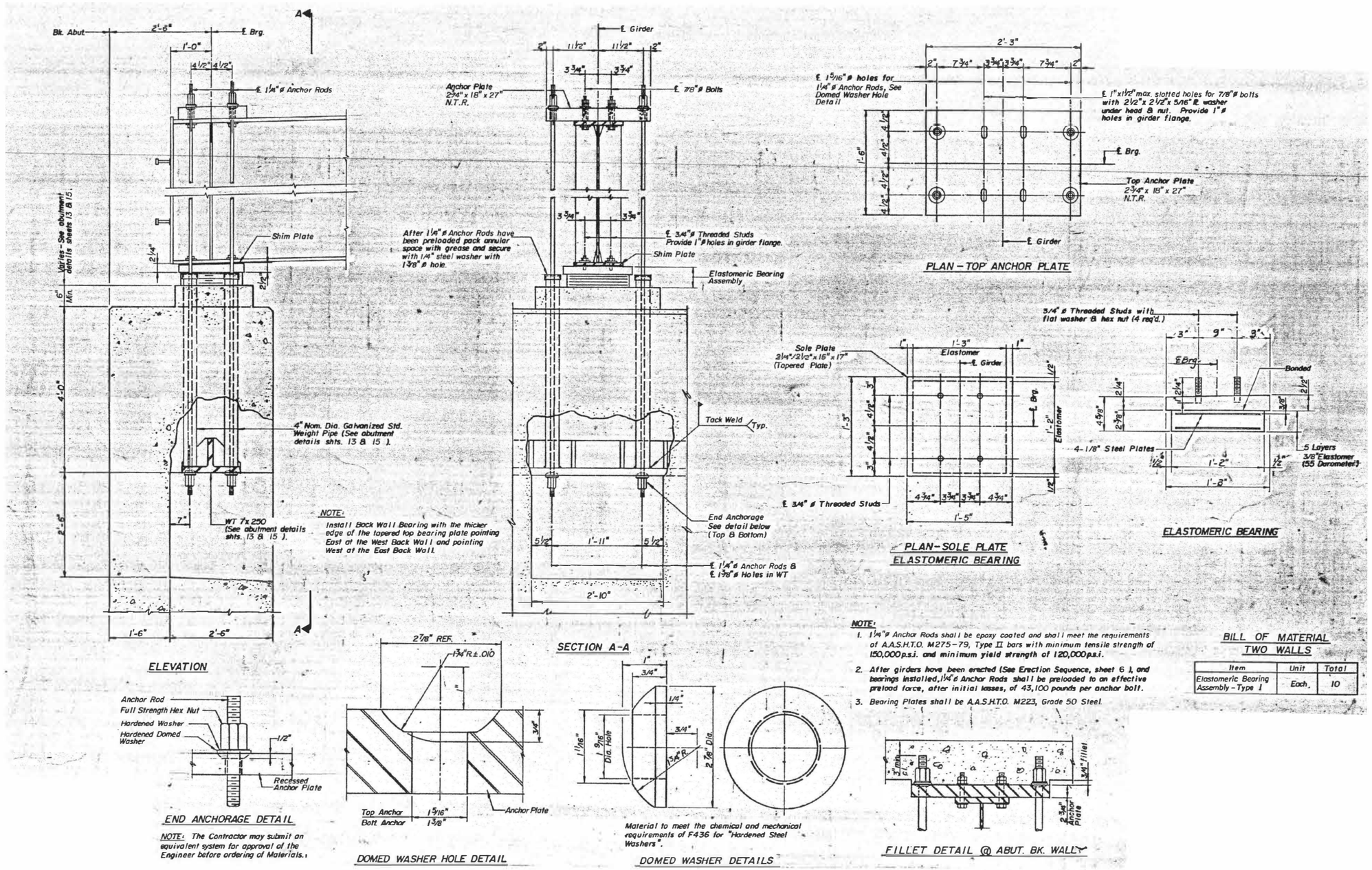

FOR INFORMATION ONLY

MODEL: Default
FILE NAME: pw:\\Burearoom.dot.illinois.gov:PWIDOT\Documents\IDOT Offices\District 4\Projects\D4 68F48\CADData\CADsheets\D468F48-sht-details.dgn

USER NAME = recendezr	DESIGNED -	REVISED -	STATE OF ILLINOIS DEPARTMENT OF TRANSPORTATION	BEARING DETAILS	F.A.I. RTE.	SECTION	COUNTY	TOTAL SHEETS	SHEET NO.
	DRAWN -	REVISED -			39	*	WOODFORD	27	14
PLOT SCALE = 2.0000 ' / in.	CHECKED -	REVISED -					CONTRACT NO. 68F48		
PLOT DATE = 1/3/2020	DATE -	REVISED -		SCALE: SHEET OF SHEETS STA. TO STA.		ILLINOIS	FED. AID PROJECT		

*102[(2HVB)BR;HB-1;HB;HB-2]BP

SN 102-0060
TR 207 OVER I-39

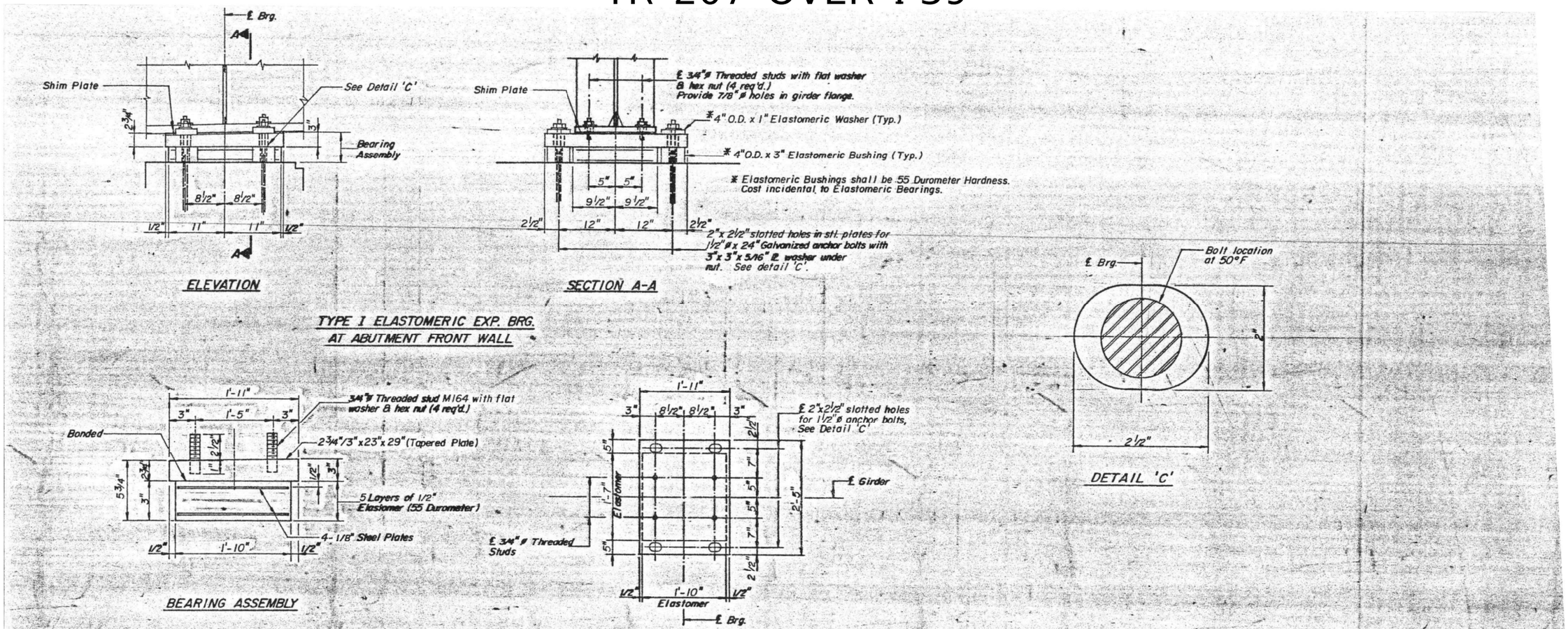

NOTES:

1. Install Front Wall Bearing with the thicker edge of the tapered top bearing plate pointing East at the West Front Wall and pointing West at the East Front Wall.
2. Bearing Plates shall be A.A.S.H.T.O. M223, Grade 50 Steel.
3. See sheet no. 11 for Anchor Bolt Installation.

BILL OF MATERIAL
TWO WALLS

Item	Unit	Total
Elastomeric Bearing Assembly – Type I	Each	10

FOR INFORMATION ONLY

MODEL: Default
FILE NAME: pw:\\pwinroom.dot.illinois.gov:PWIDOT\Documents\IDOT Offices\District 4\Projects\D4_68F48\CADData\CADsheets\D468F48-sht-details.dgn

USER NAME = recendezr	DESIGNED -	REVISED -	
	DRAWN -	REVISED -	
PLOT SCALE = 2.0000 ' / in.	CHECKED -	REVISED -	
PLOT DATE = 1/3/2020	DATE -	REVISED -	

STATE OF ILLINOIS
DEPARTMENT OF TRANSPORTATION

FRAMING PLAN

SCALE: | SHEET OF SHEETS | STA. TO STA.

F.A.I RTE.	SECTION	COUNTY	TOTAL SHEETS	SHEET NO.
39	*	WOODFORD	27	15

CONTRACT NO. 68F48

ILLINOIS FED. AID PROJECT

*102[(2HVB)BR;HB-1;HB;HB-2]BP

SN 102-0061
KAPPA ROAD OVER I-39

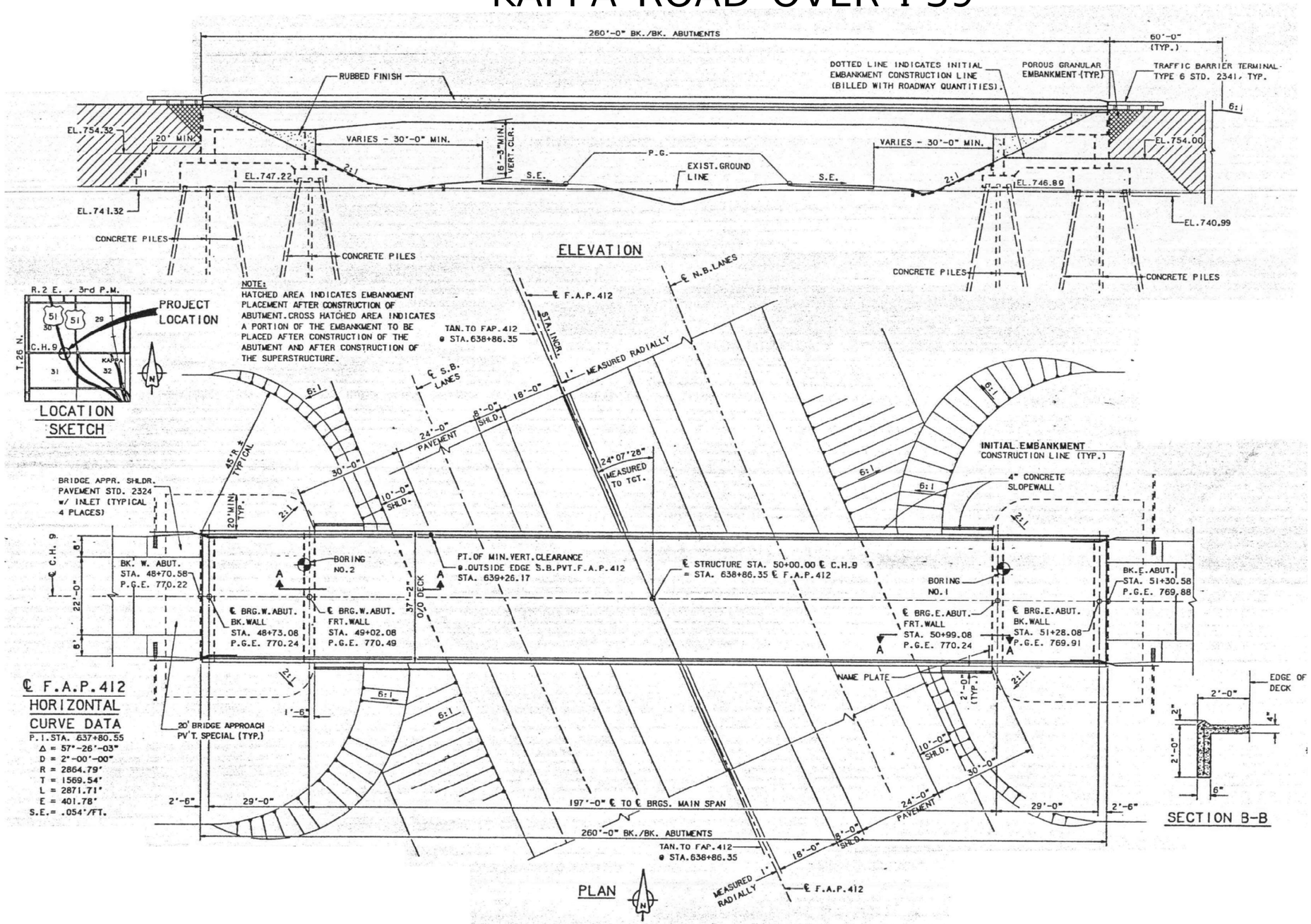

FOR INFORMATION ONLY

USER NAME = recendezr	DESIGNED -	REVISED -	STATE OF ILLINOIS DEPARTMENT OF TRANSPORTATION
	DRAWN -	REVISED -	
PLOT SCALE = 2.0000 ' / in.	CHECKED -	REVISED -	
PLOT DATE = 1/3/2020	DATE -	REVISED -	

PLAN AND ELEVATION VIEW

SCALE: SHEET OF SHEETS STA. TO STA.

F.A.I RTE.	SECTION	COUNTY	TOTAL SHEETS	SHEET NO.
39	*	WOODFORD	27	16
		CONTRACT NO. 68F48		
		ILLINOIS FED. AID PROJECT		

*102[(2HVB)BR;HB-1;HB;HB-2]BP

MODEL: Default
FILE NAME: pw:\\dbinroom.dot.illinois.gov:PWIDOT\Documents\IDOT Offices\District 4\Projects\D4_68F48\CADData\CADsheets\D468F48-sh-details.dgn

SN 102-0061
KAPPA ROAD OVER I-39

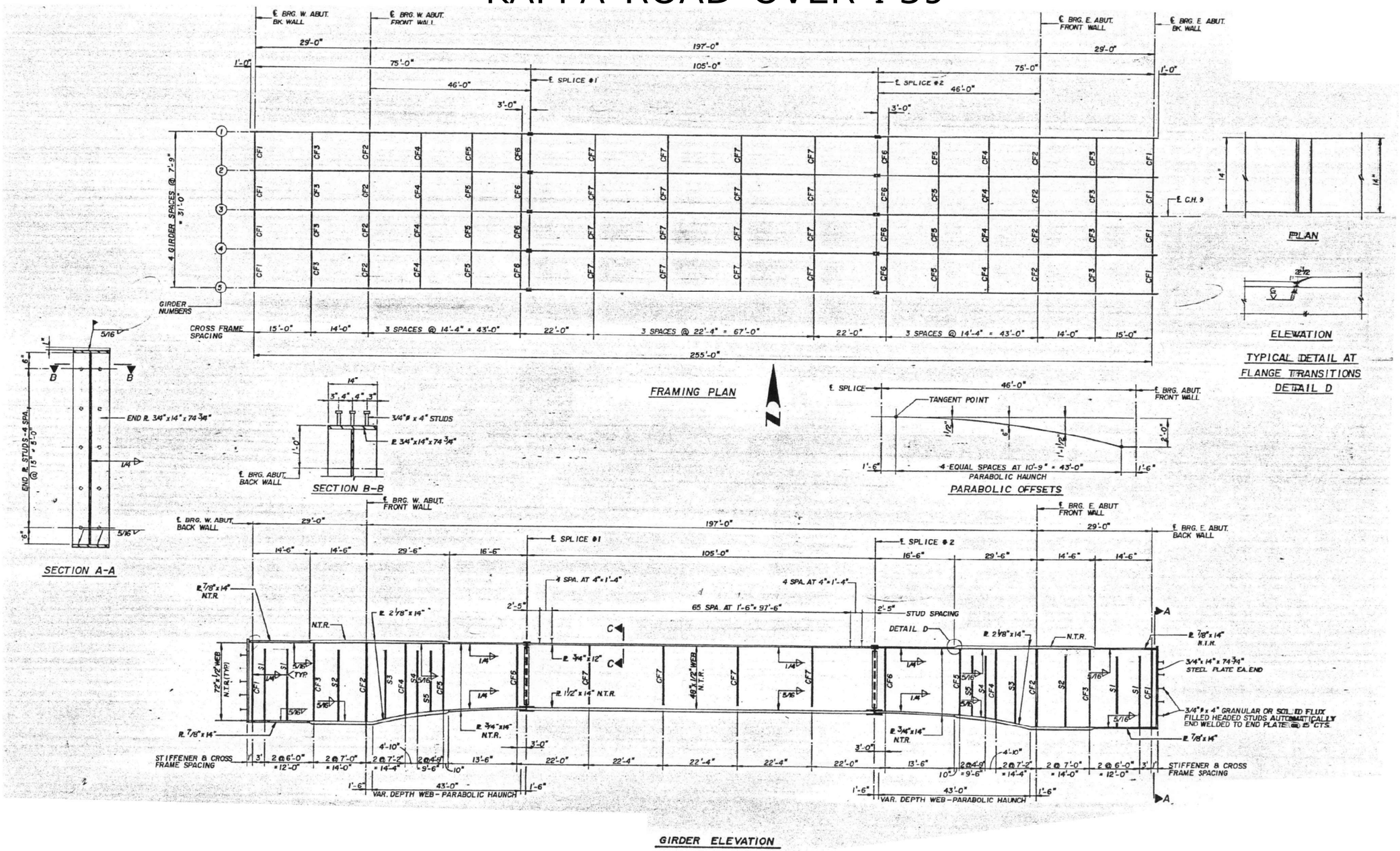

FOR INFORMATION ONLY

USER NAME = recendezr	DESIGNED -	REVISED -	
	DRAWN -	REVISED -	
PLOT SCALE = 2.0000 ' / in.	CHECKED -	REVISED -	
PLOT DATE = 1/3/2020	DATE -	REVISED -	

STATE OF ILLINOIS
DEPARTMENT OF TRANSPORTATION

FRAMING VIEW

SCALE: | SHEET OF SHEETS | STA. TO STA.

F.A.I RTE.	SECTION	COUNTY	TOTAL SHEETS	SHEET NO.
39	*	WOODFORD	27	17
		CONTRACT NO. 68F48		
	ILLINOIS	FED. AID PROJECT		

*102[(2HVB)BR;HB-1;HB;HB-2]BP

MODEL: Default
FILE NAME: pw:\\uhsnroom.dot.illinois.gov:PWIDOT\Documents\IDOT Offices\District 4\Projects\D4_68F48\CAD\data\CAD\sheets\D468F48-sht-details.dgn

SN 102-0061
KAPPA ROAD OVER I-39

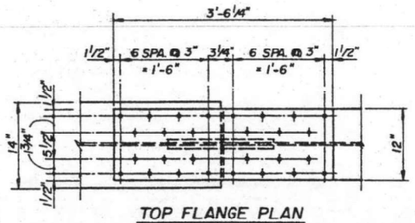

TOP FLANGE PLAN

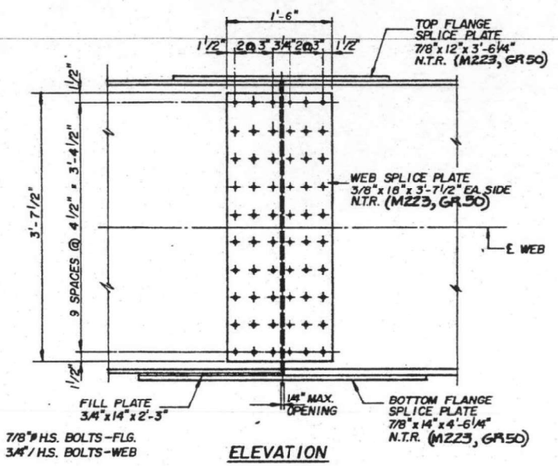

ELEVATION

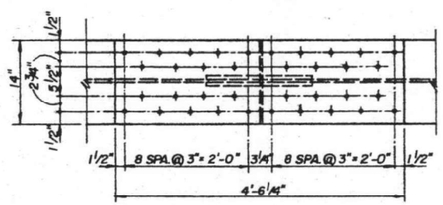

BOTTOM FLANGE PLAN

SPLICE DETAILS

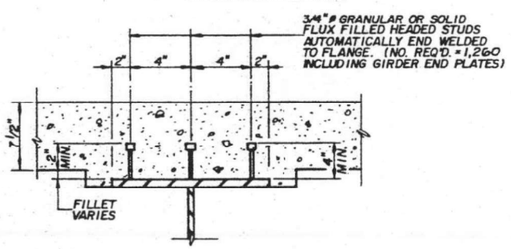

SECTION C-C

MOMENT TABLE - Symmetrical Composite 3 Span.
(Composite in Positive Moment Area Only)

INTERIOR GIRDER MOMENT TABLE			
	0.5 Sp. 1	Abut. Frt. Wall	0.5 Sp. 2
Is (in.4)	48,085	95,293	21,145
Ic (in.4)	—	—	55,199
Ss (in.3)	1304.0	2551.7	1060.4
Sc (in.3)	—	—	1435.6
DL (k/')	1.33	1.33	0.97
MDL ('k)	2100	4488	1249.6
SDL (k/')	—	—	0.36
MsDL ('k)	—	—	547.3
MLL ('k)	934	1584	1155.4
Mimp ('k)	178	500	220.1
5/3 (MLL+I)('k)	1857	3480	2297.1
Ma ('k)	5144	10,357	5322.2
* Mu ('k)	5433	10,553	5406.0
fs DL non-comp (ksi)	19.3	21.1	14.1
fs DL comp (ksi)	—	—	4.6
fs 5/3(LL+I) (ksi)	17.1	16.4	19.2
fs (overload) (ksi)	36.4	37.5	37.9
** fs (Total) (ksi)	47.3	48.7	49.3
VR (k)	—	—	51.6

INTERIOR GIRDER REACTION TABLE		
	Abut. Bk. Wall	Abut. Frt. Wall
R DL (k)	-135.0	304.7
R LL (k)	-70.2	130.9
Imp. (k)	-13.4	39.1
R Total (k)	-218.6	474.7

NOTE: Minus sign denotes uplift at reaction point.

MOMENT TABLE NOTES:

* Mu = Full Plastic Moment Capacity for Non-compact, unbraced section.

** Non-compact section.

Ma (applied moment) = 1.3 [M DL + Ms DL + 5/3 (M LL + I)]

Is and Ss are the moment of inertia and section modulus of the steel section used in computing fs (Total and Overload).

Ic and Sc are the moment of inertia and section modulus of the composite section used in computing fs (Total and Overload).

VR is the maximum L + impact shear range in span.

The Fully Plastic Moment capacity (Mu) is computed according to A.A.S.H.T.O. 10.48.4 & 10.50.1.2.

fs Total is the sum of the stresses due to 1.3 [MDL + MsDL + 5/3(MLL+I)].

fs Overload is the sum of the stresses due to MDL + MsDL + 5/3(MLL+I)

MDL - Moment due to the dead loads on non-composite section.

MsDL - Moment due to the dead loads on composite section.

MLL - Moment due to live load on non-composite or composite section.

I - Live Load Impact

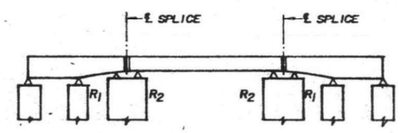

ERECTION SKETCH

R_1 = 7 KIPS ± PER GIRDER

R_2 = 12 KIPS ± PER GIRDER

PLATE GIRDER
ERECTION SEQUENCE

1. ERECT THE GIRDERS IN 3 SEGMENTS, SUPPORTED BY THE PERMANENT BEARINGS AT ABUTMENT FRONT AND REAR WALL AND TEMPORARY SUPPORTS AT SPLICES.
2. ERECT THE GIRDER SPLICES.
3. INSTALL TIEDOWN DEVICES.
4. REMOVE TEMPORARY SUPPORTS.
5. POUR CONCRETE DECK IN SEQUENCE AS SHOWN ON SHEET #2

COST OF ERECTING AND REMOVING TEMPORARY SUPPORTS SHALL BE INCIDENTAL TO THE COST OF FURNISHING AND ERECTING STRUCTURAL STEEL.

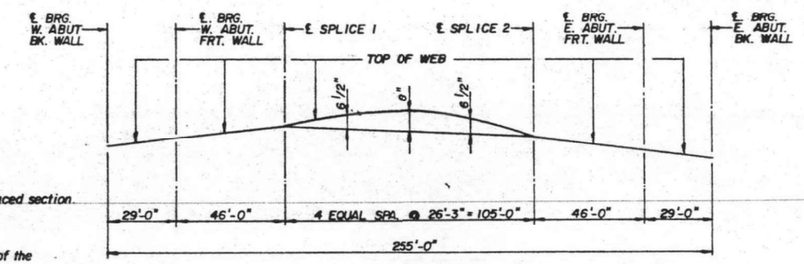

CAMBER DIAGRAM

* TOP OF WEB ELEVATIONS

LOCATION	GIRDER NUMBER ①&⑤	②&④	③
℄ BRG. W. ABUT. BACK WALL	768.923	769.067	769.191
℄ BRG. W. ABUT. FRONT WALL	769.204	769.349	769.473
℄ SPLICE #1	769.655	769.800	769.921
℄ SPLICE #2	769.518	769.663	769.784
℄ BRG. E. ABUT. FRONT WALL	768.948	769.093	769.217
℄ BRG. E. ABUT. BACK WALL	768.590	768.734	768.859

* FOR FABRICATION ONLY. TOP OF WEB ELEVATIONS HAVE NOT BEEN ADJUSTED FOR DEAD LOAD DEFLECTIONS OF GIRDER.

FOR INFORMATION ONLY

MODEL: Default
FILE NAME: pw:\\ildotcmroom.dot.illinois.gov:PWIDOT\Documents\IDOT Offices\District 4\Projects\D4_68F48\CADData\CADsheets\D468F48-sht-details.dgn

USER NAME = recendez	DESIGNED -	REVISED -	
	DRAWN -	REVISED -	
PLOT SCALE = 2.0000 ' / in.	CHECKED -	REVISED -	
PLOT DATE = 1/3/2020	DATE -	REVISED -	

STATE OF ILLINOIS
DEPARTMENT OF TRANSPORTATION

STRUCTURAL STEEL DETAILS

SCALE: | SHEET OF SHEETS | STA. TO STA.

F.A.I RTE.	SECTION	COUNTY	TOTAL SHEETS	SHEET NO.
39	*	WOODFORD	27	18

CONTRACT NO. 68F48

ILLINOIS | FED. AID PROJECT

*102[(2HVB)BR;HB-1;HB;HB-2]BP

SN 102-0061
KAPPA ROAD OVER I-39

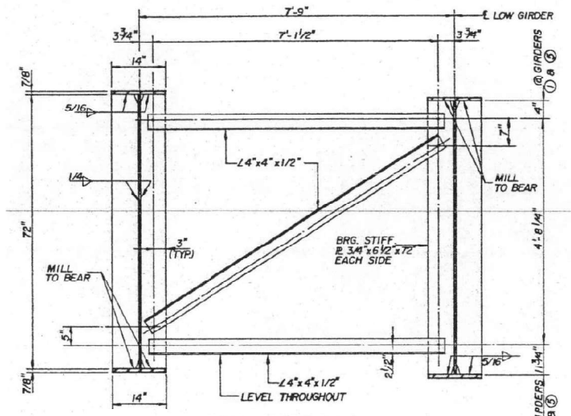

CROSS FRAME CF-1
(8 REQUIRED)
FRAME CF-1 MAY BE REMOVED AFTER BACKWALL IS IN PLACE.

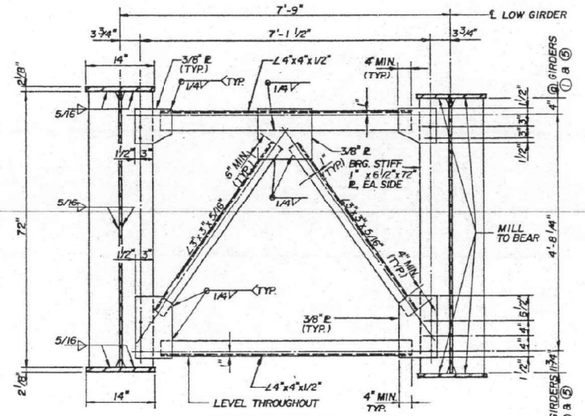

CROSS FRAME CF-2
(8 REQUIRED)

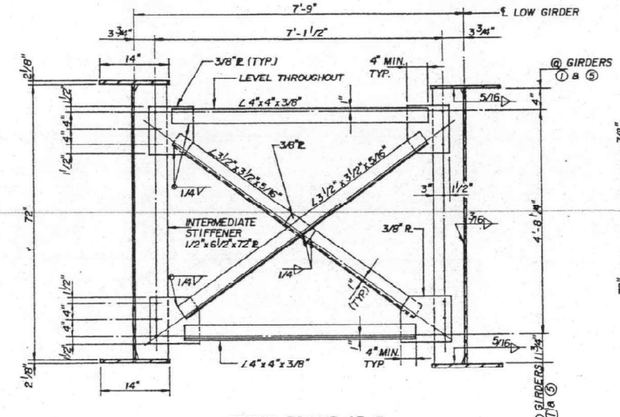

CROSS FRAME CF-3
(8 REQUIRED)

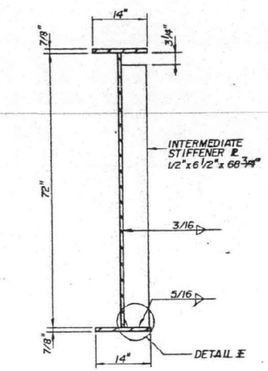

INTERMEDIATE STIFFENER
DETAIL S1
(20 REQUIRED)

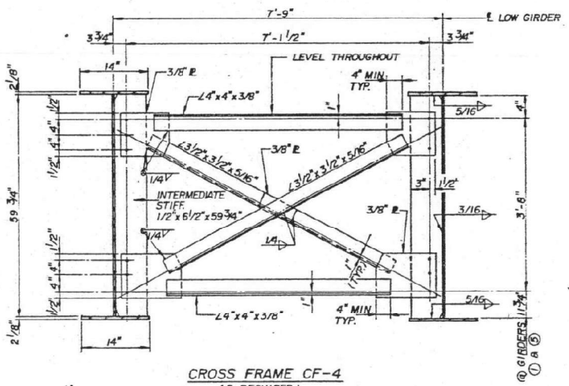

CROSS FRAME CF-4
(8 REQUIRED)

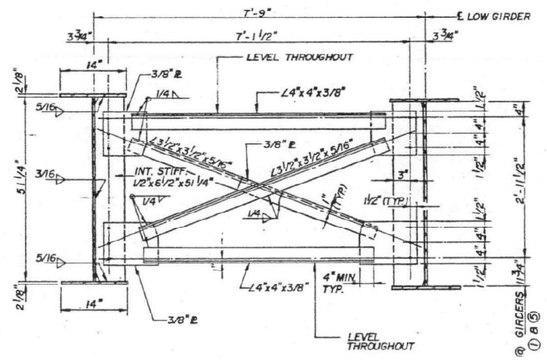

CROSS FRAME CF-5
(8 REQUIRED)

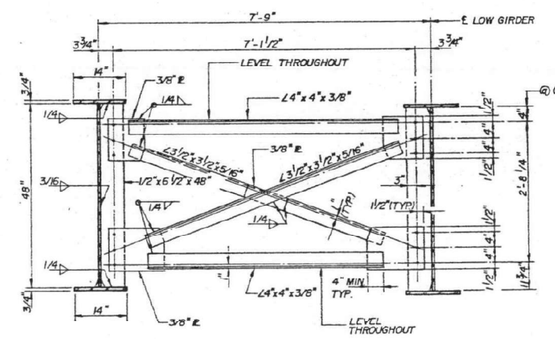

CROSS FRAME CF-6
(8 REQUIRED)

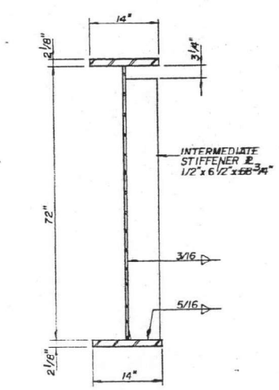

INTERMEDIATE STIFFENER
DETAIL S2
(10 REQUIRED)

NOTE:
ALL CROSS FRAME BOLTS SHALL BE 3/4" ø HIGH STRENGTH BOLTS. PROVIDE 15/16" ø HOLES AND HARDENED WASHERS UNDER NUT AND HEAD.

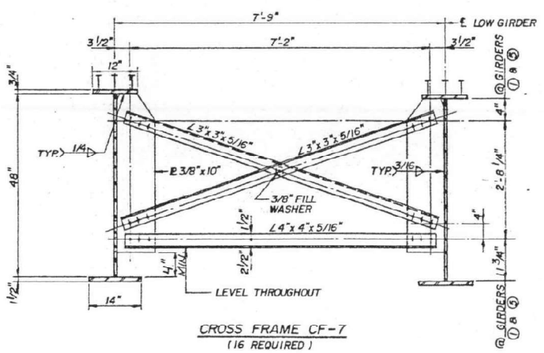

CROSS FRAME CF-7
(16 REQUIRED)

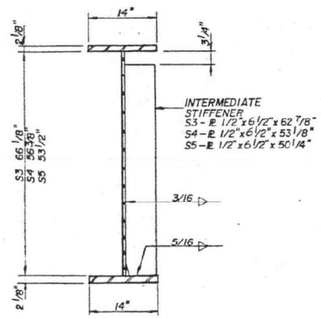

INTERMEDIATE STIFFENER
DETAIL S3, S4 & S5
(10 REQUIRED)

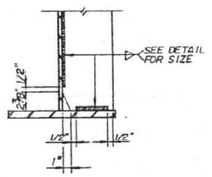

DETAIL E

NOTE:
TYPICAL AT ALL STIFFENER PLATE TO FLANGE CONNECTIONS AND ALL CROSS FRAME CONNECTION PLATE TO FLANGE CONNECTIONS.

FOR INFORMATION ONLY

MODEL: Default
FILE NAME: pw:\\pwinnoom.dot.illinois.gov:PWIDOT\Documents\IDOT Offices\District 4\Projects\D4 68F48\CADData\CADsheets\D468F48-sht-details.dgn

USER NAME = recendezr	DESIGNED -	REVISED -	STATE OF ILLINOIS DEPARTMENT OF TRANSPORTATION
	DRAWN -	REVISED -	
PLOT SCALE = 2.0000 ' / in.	CHECKED -	REVISED -	
PLOT DATE = 1/3/2020	DATE -	REVISED -	

CROSS FRAME DETAILS

SCALE: SHEET OF SHEETS STA. TO STA.

F.A.I RTE.	SECTION	COUNTY	TOTAL SHEETS	SHEET NO.
39	*	WOODFORD	27	19
		CONTRACT NO. 68F48		
	ILLINOIS	FED. AID PROJECT		

*102[(2HVB)BR;HB-1;HB;HB-2]BP

SN 102-0061
KAPPA ROAD OVER I-39

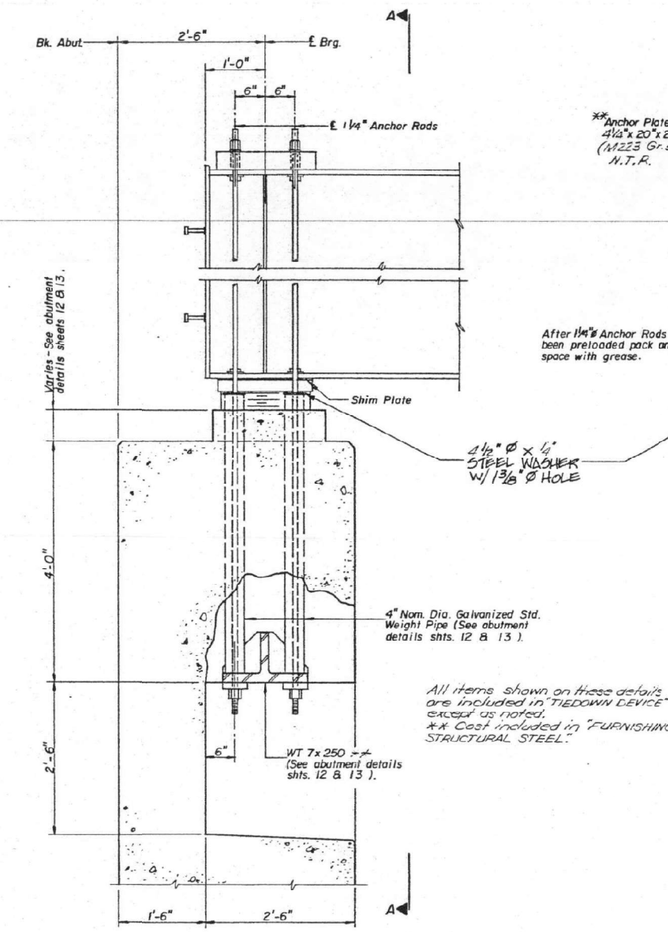

ELEVATION

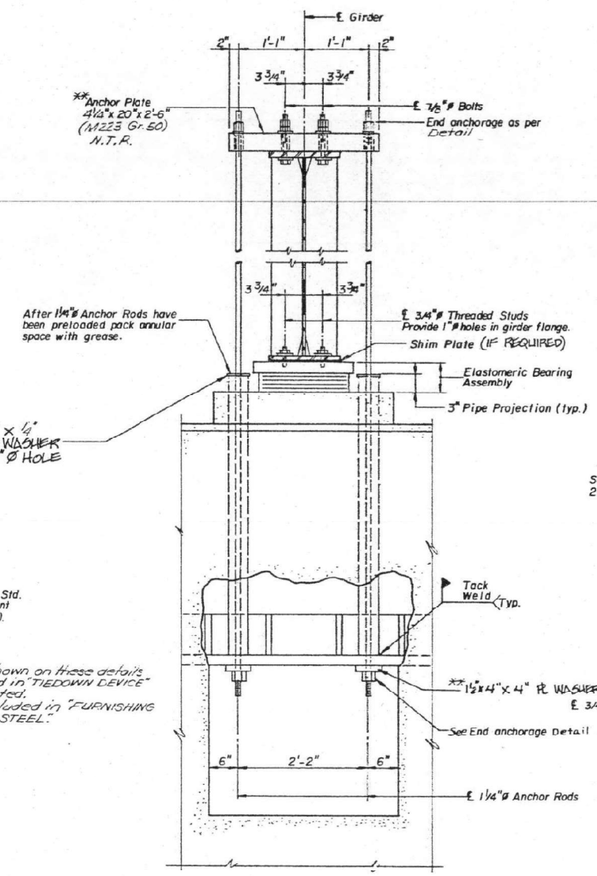

SECTION A-A

All items shown on these details are included in "TIEDOWN DEVICE" except as noted.
** Cost included in "FURNISHING STRUCTURAL STEEL".

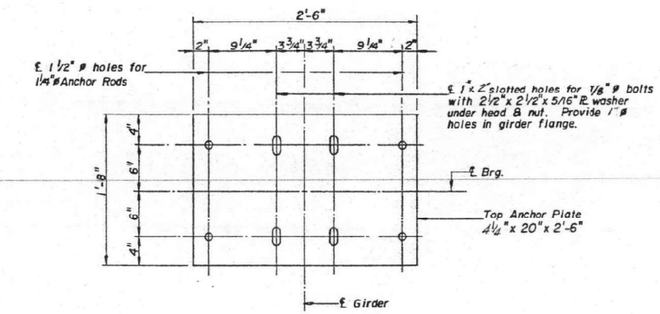

PLAN - TOP ANCHOR PLATE

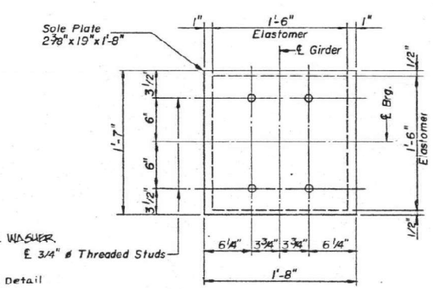

PLAN-SOLE PLATE
ELASTOMERIC BEARING

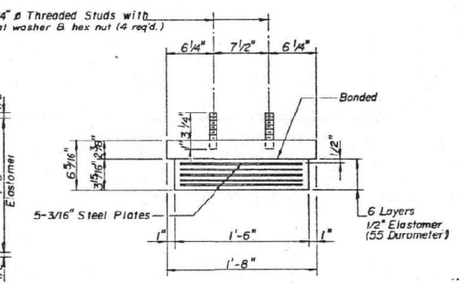

ELASTOMERIC BEARING

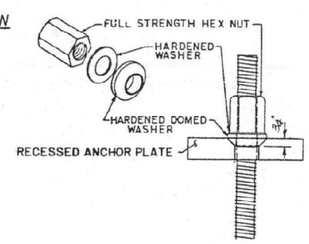

END ANCHORAGE DETAIL

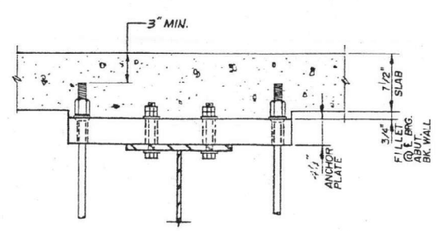

END FILLET DETAIL

FOR INFORMATION ONLY

USER NAME = recendezr	DESIGNED -	REVISED -	
	DRAWN -	REVISED -	
PLOT SCALE = 2.0000 ' / in.	CHECKED -	REVISED -	
PLOT DATE = 1/3/2020	DATE -	REVISED -	

STATE OF ILLINOIS
DEPARTMENT OF TRANSPORTATION

BEARING DETAILS

SCALE: SHEET OF SHEETS STA. TO STA.

F.A.I RTE.	SECTION	COUNTY	TOTAL SHEETS	SHEET NO.
39	*	WOODFORD	27	20
		CONTRACT NO. 68F48		
	ILLINOIS	FED. AID PROJECT		

*102[(2HVB)BR;HB-1;HB;HB-2]BP

MODEL: Default
FILE NAME: pw:\\dbnroom.dot.illinois.gov:PWIDOT\Documents\IDOT Offices\District 4\Projects\D4_68F48\CADData\CADsheets\D468F48-sh-details.dgn

SN 102-0061
KAPPA ROAD OVER I-39

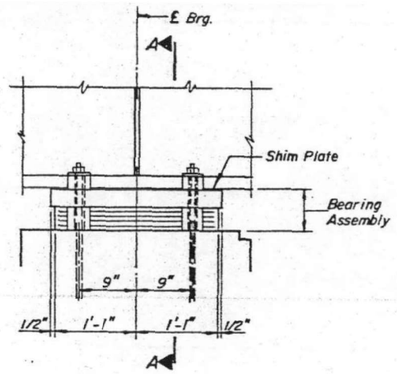

ELEVATION

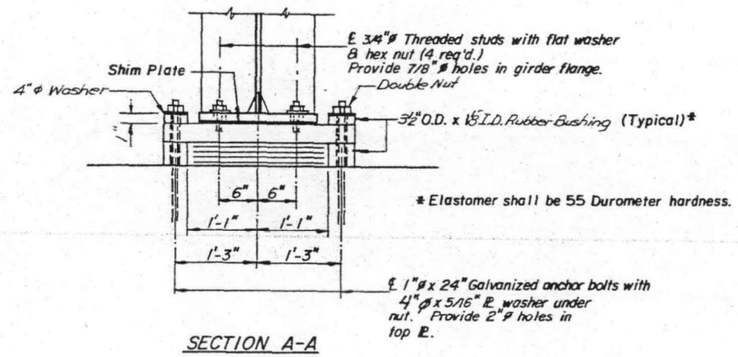

SECTION A-A

TYPE I ELASTOMERIC EXP. BRG.
AT ABUTMENT FRONT WALL

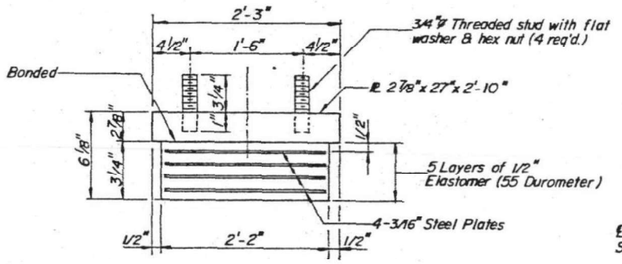

BEARING ASSEMBLY

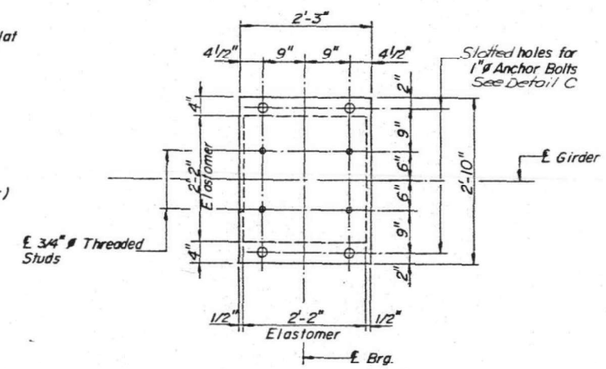

PLAN – TOP ℙ

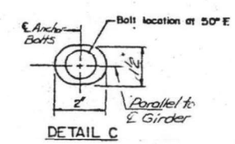

DETAIL C

Item	Unit	Total
Elastomeric Bearing Assembly–Type I	Each	10

FOR INFORMATION ONLY

USER NAME = recendezr	DESIGNED -	REVISED -	
	DRAWN -	REVISED -	
PLOT SCALE = 2.0000 ' / in.	CHECKED -	REVISED -	
PLOT DATE = 1/3/2020	DATE -	REVISED -	

STATE OF ILLINOIS
DEPARTMENT OF TRANSPORTATION

FRAMING PLAN

SCALE: SHEET OF SHEETS STA. TO STA.

F.A.I RTE.	SECTION	COUNTY	TOTAL SHEETS	SHEET NO.
39	*	WOODFORD	27	21
		CONTRACT NO. 68F48		
	ILLINOIS	FED. AID PROJECT		

*102[(2HVB)BR;HB-1;HB;HB-2]BP

MODEL: Default
FILE NAME: pw:\\dbinroom.dot.illinois.gov:PWIDOT\Documents\IDOT Offices\District 4\Projects\D4_68F48\CAD\Data\CAD\Sheets\D468F48-sh-detail1.dgn

SN 102-0062
TOWNSHIP ROAD 229 OVER I-39

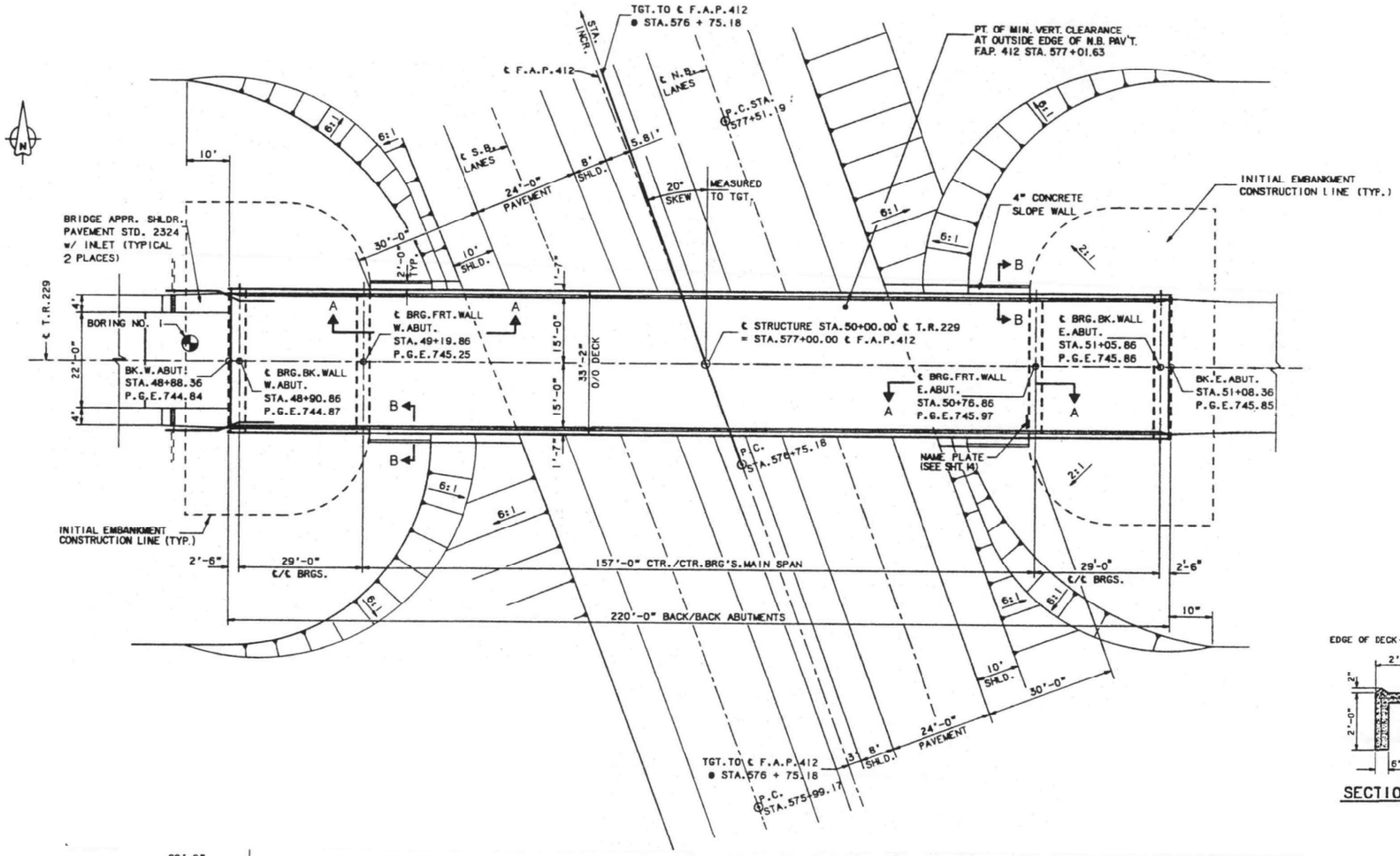

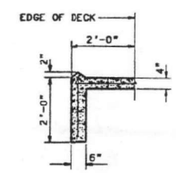

SECTION B-B

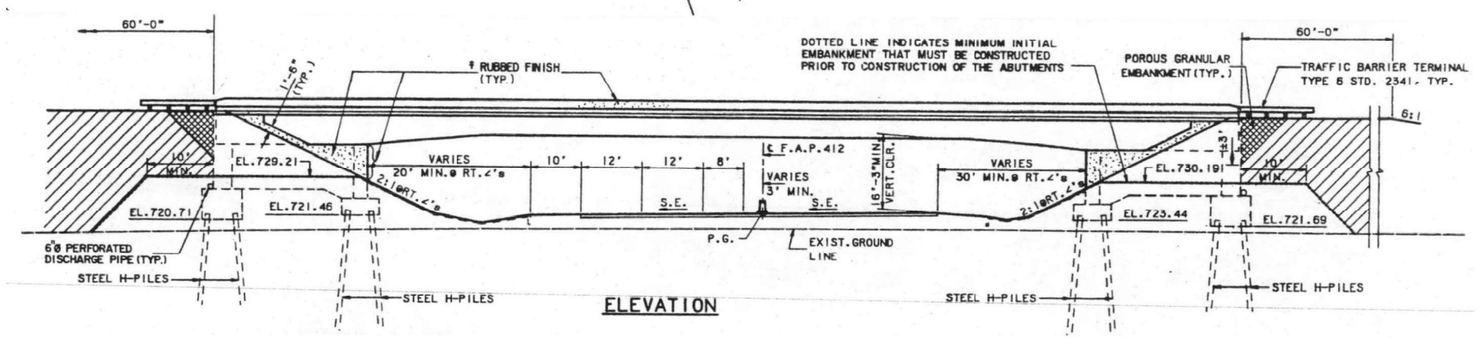

ELEVATION

FOR INFORMATION ONLY

USER NAME = recendezr	DESIGNED -	REVISED -	STATE OF ILLINOIS DEPARTMENT OF TRANSPORTATION	PLAN AND ELEVATION VIEW	F.A.I RTE.	SECTION	COUNTY	TOTAL SHEETS / SHEET NO.
	DRAWN -	REVISED -			39	*	WOODFORD	27 / 22
PLOT SCALE = 2.0000 ' / in.	CHECKED -	REVISED -					CONTRACT NO. 68F48	
PLOT DATE = 1/3/2020	DATE -	REVISED -		SCALE: SHEET OF SHEETS STA. TO STA.		ILLINOIS	FED. AID PROJECT	

*102[(2HVB)BR;HB-1;HB;HB-2]BP

MODEL: Default
FILE NAME: pw:\\dbanroom.dot.illinois.gov:PWIDOT\Documents\IDOT Offices\District 4\Projects\D4_68F48\CADData\CADsheets\D468F48-sh-details.dgn

SN 102-0062
TOWNSHIP ROAD 229 OVER I-39

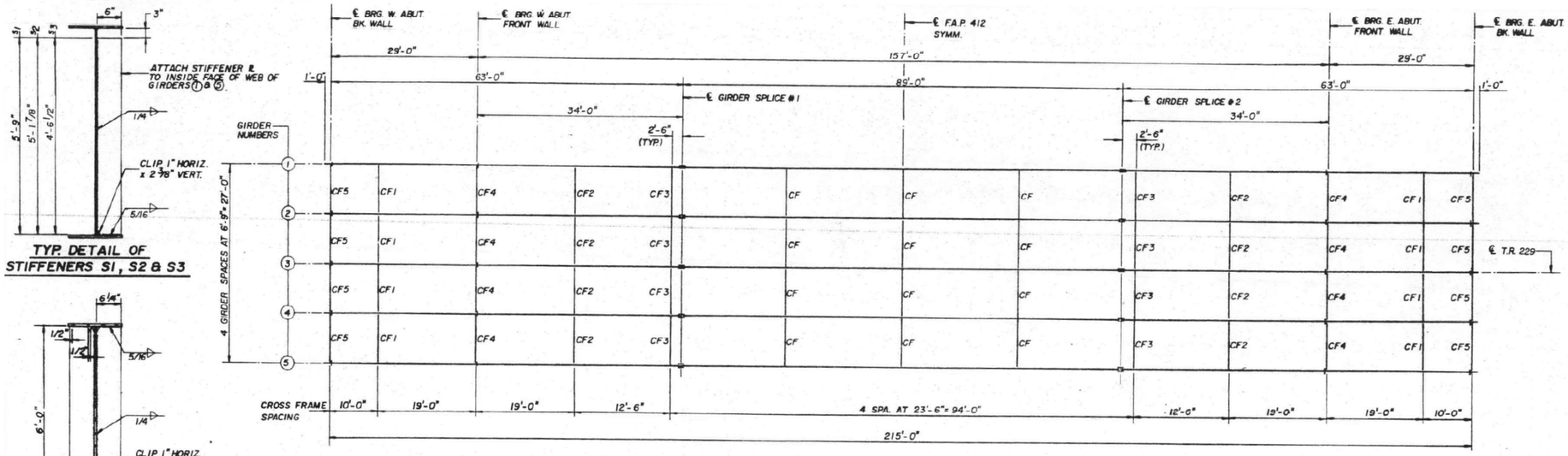

FRAMING PLAN

TYP. DETAIL OF STIFFENERS S1, S2 & S3

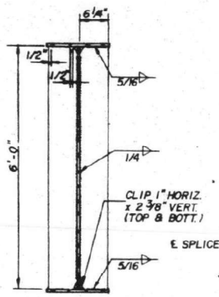

TYP. DETAIL OF STIFFENER S4

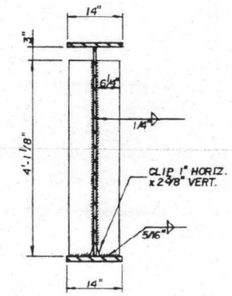

TYP. DETAIL OF STIFFENER S5

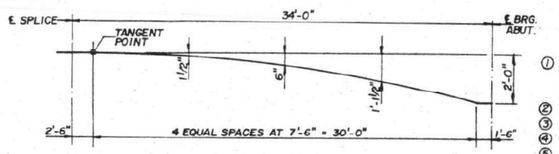

PARABOLIC OFFSET SKETCH

PLATE GIRDER ERECTION SEQUENCE

1. ERECT THE GIRDERS IN 3 SEGMENTS SUPPORTED BY THE PERMANENT BEARINGS AT ABUTMENT FRONT AND REAR WALL AND TEMPORARY SUPPORTS AT SPLICES.
2. ERECT THE GIRDER SPLICES.
3. INSTALL TIEDOWN DEVICES.
4. REMOVE TEMPORARY SUPPORTS.
5. POUR CONCRETE DECK IN SEQUENCE AS SHOWN ON SHEET #2.

COST OF ERECTING AND REMOVING TEMPORARY SUPPORTS SHALL BE INCIDENTAL TO THE COST OF FURNISHING AND ERECTING STRUCTURAL STEEL.

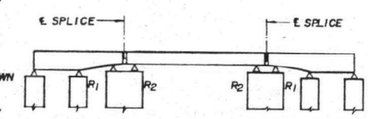

ERECTION SKETCH

R_1 = 4KIPS PER GIRDER
R_2 = 7KIPS PER GIRDER

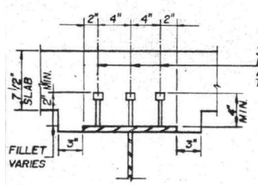

SECTION A-A

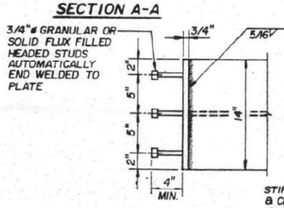

VIEW C-C
SHOWING STUD CONNECTION

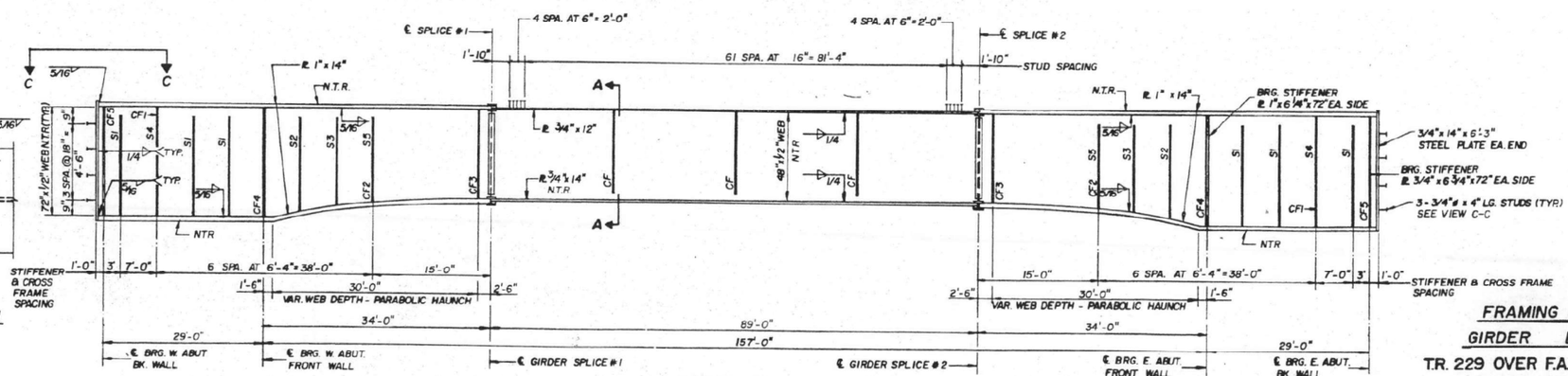

GIRDER ELEVATION

- "N.T.R." DENOTES PLATES TO WHICH NOTCH TOUGHNESS REQUIREMENTS ARE APPLICABLE.

ALL GIRDER STEEL, INCLUDING BEARING STIFFENERS SHALL BE A.A.S.H.T.O. M 223, GRADE 50.

NOTE
LOCATE INTERMEDIATE STIFFENERS S1, S2, OR S3 ON INSIDE FACE OF WEB OF GIRDER ① & ⑤.

FRAMING PLAN & GIRDER ELEVATION

T.R. 229 OVER F.A.P. ROUTE NO. 412
F.A.P. ROUTE 412, SEC. 102-1HB-2
WOODFORD COUNTY

FOR INFORMATION ONLY

USER NAME = recenderr	DESIGNED -	REVISED -	
	DRAWN -	REVISED -	
PLOT SCALE = 2.0000 ' / in.	CHECKED -	REVISED -	
PLOT DATE = 1/3/2020	DATE -	REVISED -	

STATE OF ILLINOIS
DEPARTMENT OF TRANSPORTATION

FRAMING PLAN

SCALE: SHEET OF SHEETS STA. TO STA.

F.A.I RTE.	SECTION	COUNTY	TOTAL SHEETS	SHEET NO.
39	*	WOODFORD	27	23
		CONTRACT NO. 68F48		
	ILLINOIS	FED. AID PROJECT		

*102[(2HVB)BR;HB-1;HB;HB-2]BP

MODEL: Default
FILE NAME: pw:\\dallanroom.dot.illinois.gov:PWIDOT\Documents\IDOT Offices\District 4\Projects\D4_68F48\CADData\CADsheets\D468F48-dh-details.dgn

SN 102-0062
TOWNSHIP ROAD 229 OVER I-39

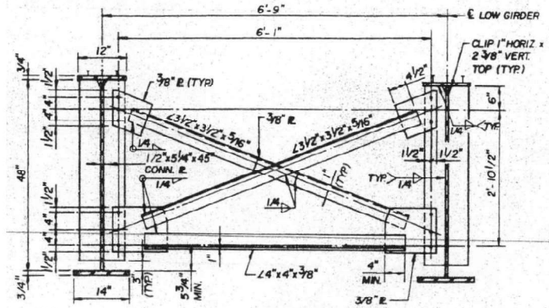

CROSS FRAME CF
(12 REQ'D.)

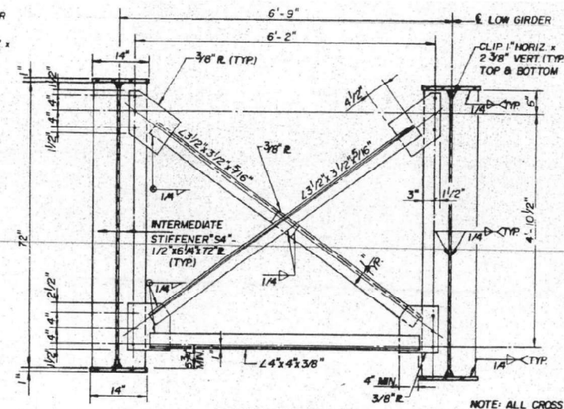

CROSS FRAME CF1
(8 REQ'D.)

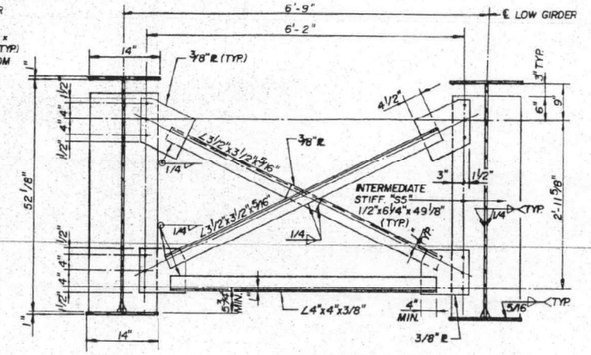

CROSS FRAME CF 2
(8 REQ'D.)

NOTE: ALL CROSS FRAME CONN. BOLTS ARE 3/4"ø HIGH STRENGTH BOLTS. IN 15/16"ø OVERSIZE HOLES. HARDENED WASHERS REQ'D. OVER ALL HOLES IN CROSS FRAME CONN.

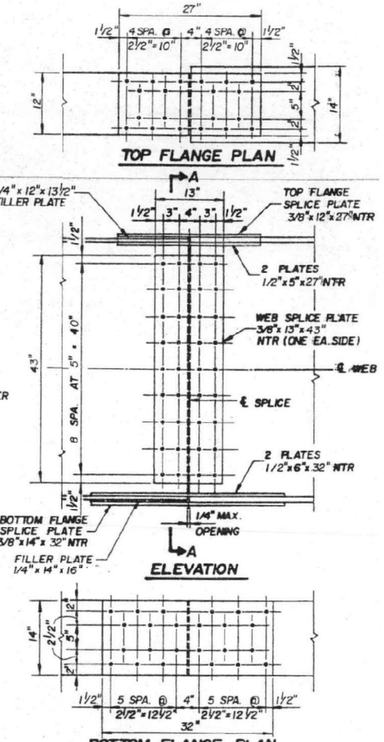

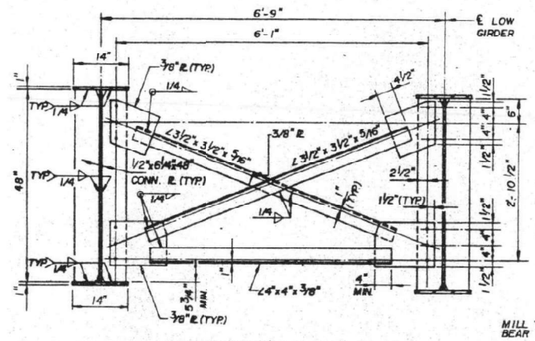

CROSS FRAME CF 3
(8 REQ'D.)

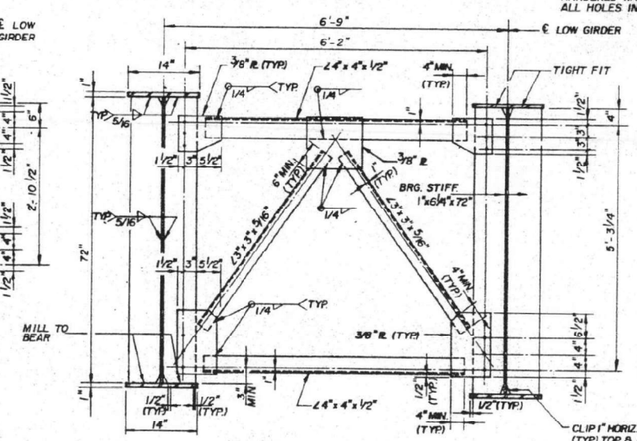

CROSS FRAME CF 4
(8 REQ'D.)

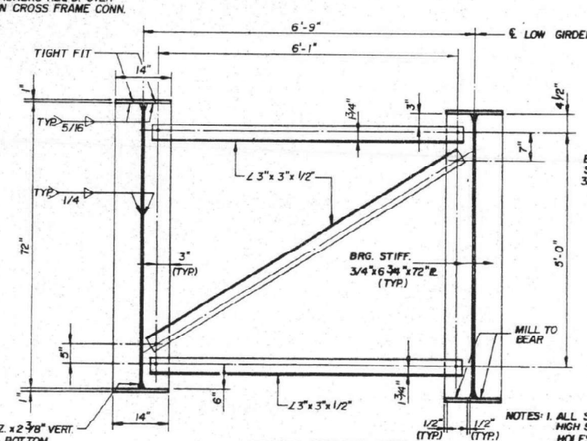

CROSS FRAME CF 5
(8 REQ'D.)

NOTE: THESE CROSS FRAMES MAY BE REMOVED AFTER BACK WALL IS IN PLACE.

NOTES:
1. ALL SPLICE BOLTS 7/8"ø A325 HIGH STRENGTH BOLTS IN 15/16"ø HOLES.
2. ALL SPLICE MATERIAL IS AASHTO M223, GRADE 50 STEEL.
3. NTR DESIGNATES NOTCH TOUGHNESS REQUIREMENT.

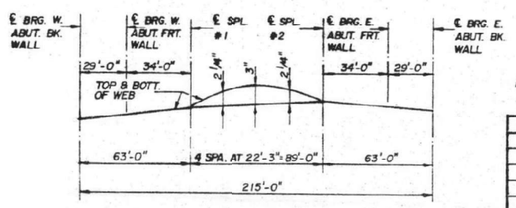

CAMBER DIAGRAM

MOMENT TABLE: Symmetrical Composite 3 Span
(Composite in Positive Moment Area Only)

INTERIOR GIRDER MOMENT TABLE	0.5 Sp.1	Abut Frt Wall	0.5 Sp.2
Is (in 4)	52,857	52,857	16,164
Ic (in 4)			40,035
Ss (in 3)	1,428	1,428	676
Sc (in 3)			951
℄ (K/1)	0.890	0.890	0.820
M℄ ('K)	815	1,815	718
s℄ (K/1)	0.310	0.310	0.310
Ms℄ ('K)	277	620	348
M℄L ('K)	475	962	806
M imp. ('K)	142	221	145
5/3 (M℄L + I) ('K)	1,030	1,976	1,588
Ma ('K)	2,759	5,734	3,450
fs℄ non-comp (ks.i.)	6.8	15.3	12.7
fs℄ comp. (ks.i.)	2.3	5.2	4.4
fs 5/3 (L + I) (ks.i.)	8.7	16.6	20.0
fs (Overload) (ks.i.)	17.8	37.1	37.1
* fs (Total) (k.s.i.)	23.1	48.2	48.2
VR ('K)			45.6

INTERIOR GIRDER REACTION TABLE	Abut Bk. Wall	Abut. Frt. Wall
R℄ (K)	-65.8	191.4
RL (K)	-36.2	85.7
Imp (K)	-10.8	15.4
R Total (K)	-112.8	292.5

* Non-compact section.
Ma (Applied Moment) = 1.3 [M℄ + Ms℄ + 5/3 (ML + I)]
Is and Ss are the moment of inertia and section modulus of the steel section used in computing fs (Total and Overload).
Ic and Sc are the moment of inertia and section modulus of the composite section used in computing fs (Total and Overload).
VR is the maximum L + impact shear range in span.
fs Total is the sum of the stresses due to 1.3 [M℄ + Ms℄ + 5/3 (ML + I)].
fs Overload is the sum of the stresses due to M℄ + Ms℄ + 5/3 (ML + I).
M℄ - Moment due to the dead loads on non-composite section.
Ms℄ - Moment due to the dead loads on composite section.
ML - Moment due to live load on non-composite or composite section.
I - Live Load Impact.
(-) Sign means Uplift

* TOP OF WEB ELEVATIONS

LOCATION	℄ BRG. W. ABUT. BK. WALL	℄ BRG. W. ABUT. FRT. WALL	SPLICE # 1	SPLICE # 2	℄ BRG. E. ABUT. FRT. WALL	℄ BRG. E. ABUT. BK. WALL
GIRDER 1	743.68	744.14	744.68	745.09	744.86	744.66
GIRDER 2	743.80	744.26	744.80	745.21	744.98	744.78
GIRDER 3	743.90	744.36	744.90	745.31	745.08	744.88
GIRDER 4	743.80	744.26	744.80	745.21	744.98	744.78
GIRDER 5	743.68	744.14	744.68	745.09	744.86	744.66

ELEVATIONS ABOVE ARE TOP OF GIRDER WEB BEFORE ANY DEFLECTIONS.

* FOR FABRICATION ONLY.

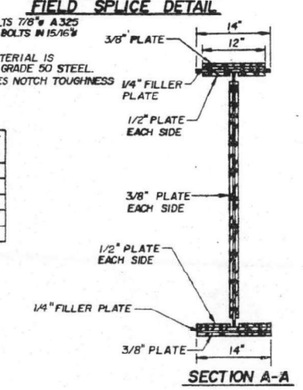

SECTION A-A

FOR INFORMATION ONLY

MODEL: Default
FILE NAME: pw:\\adminoom.dot.illinois.gov:PWIDOT\Documents\IDOT Offices\District 4\Projects\D4_68F48\CAD\data\CAD\sheets\D468F48-sth-details.dgn

USER NAME = recenderr	DESIGNED -	REVISED -	
	DRAWN -	REVISED -	
PLOT SCALE = 2.0000 ' / in.	CHECKED -	REVISED -	
PLOT DATE = 1/3/2020	DATE -	REVISED -	

STATE OF ILLINOIS
DEPARTMENT OF TRANSPORTATION

CROSS FRAMES & GIRDER DETAILS

SCALE: | SHEET OF SHEETS | STA. TO STA.

F.A.I RTE.	SECTION	COUNTY	TOTAL SHEETS	SHEET NO.
39	*	WOODFORD	27	24
		CONTRACT NO. 68F48		
	ILLINOIS	FED. AID PROJECT		

*102[(2HVB)BR;HB-1;HB;HB-2]BP

SN 102-0062
TOWNSHIP ROAD 229 OVER I-39

STANDARD CONSTRUCTION:
1. MESH: 1 1/2" DIAMOND
2. WIRE: NO. 10 WASHBURN & MOEN GUAGE **
3. FRAME: 3/8" ROUND ROD

ALL MATERIALS TO BE GALVANIZED.

TWO WIRE-MESHED FRAMES SHALL BE PROVIDED FOR EACH SCREEN PANEL.

FOUR TABS SHALL BE PROVIDED FOR EACH WIRE-MESHED FRAME.

NOTES:
1. # INDICATES STANDARD GAGE FOR ANGLES.
2. CLIPS SHALL BE PROVIDED FOR PERMANENT SCREEN PANELS.
3. ONE ACCESSIBLE SCREEN PANEL SHALL BE PROVIDED AT EACH FRONT ABUTMENT.
4. PROVIDE HINGED TABS AT CONNECTIONS TO THE CONNECTION PLATES FOR THE ACCESSIBLE SCREEN PANEL ONLY.

** INCLUDES COATING

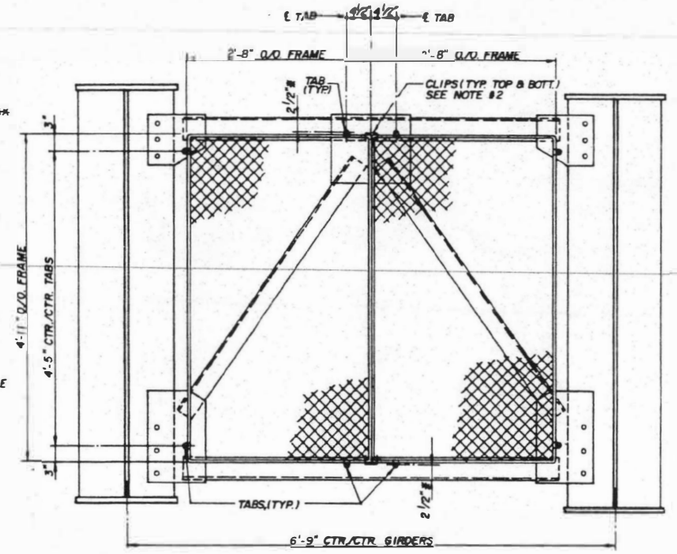

TYPICAL SCREEN PANEL @ FRONT ABUTMENT

NOTE: SCREEN PANELS TO BE MOUNTED ON CROSS FRAME CF4 AT ℄ BEARING OF ABUTMENT FRONT WALL. SEE SHEET 7 FOR DETAILS OF CROSS FRAME CF4.

ERECTION SEQUENCE FOR SCREEN PANELS

1. PERMANENT
   a. FIELD CONNECT THE TWO WIRE-MESHED FRAMES WITH A CLIP TYPE CONNECTION.
   b. FIELD DRILL HOLES AT THE CONNECTION PLATES AND ANGLES OF THE DIAPHRAGMS TO MATCH THE LOCATION OF THE TABS.
   c. USE HIGH STRENGTH BOLTS.
   d. THE BOLTS SHALL BE DRAWN UP TIGHT AND THE THREADS BURRED AT THE FACE OF THE NUT WITH A POINTED TOOL.
2. ACCESSIBLE
   SEQUENCE SIMILAR TO PERMANENT SCREEN PANELS WITH EXCEPTION TO PROVIDING A CLIP TYPE CONNECTION.

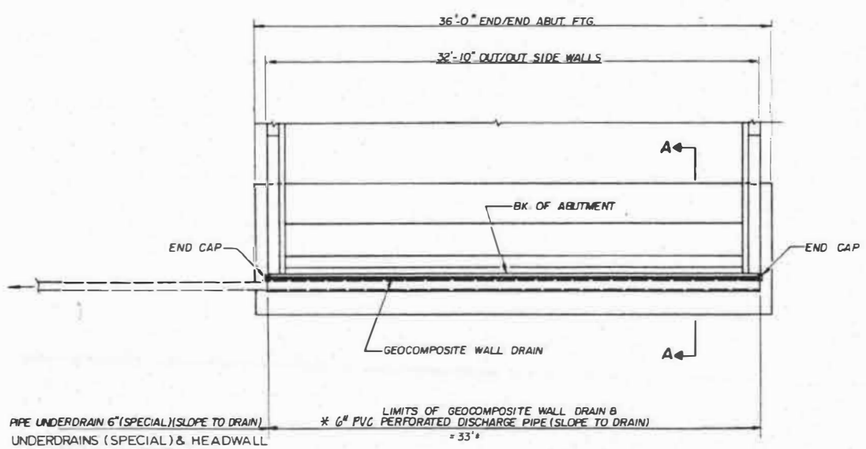

PLAN - WEST ABUTMENT

N

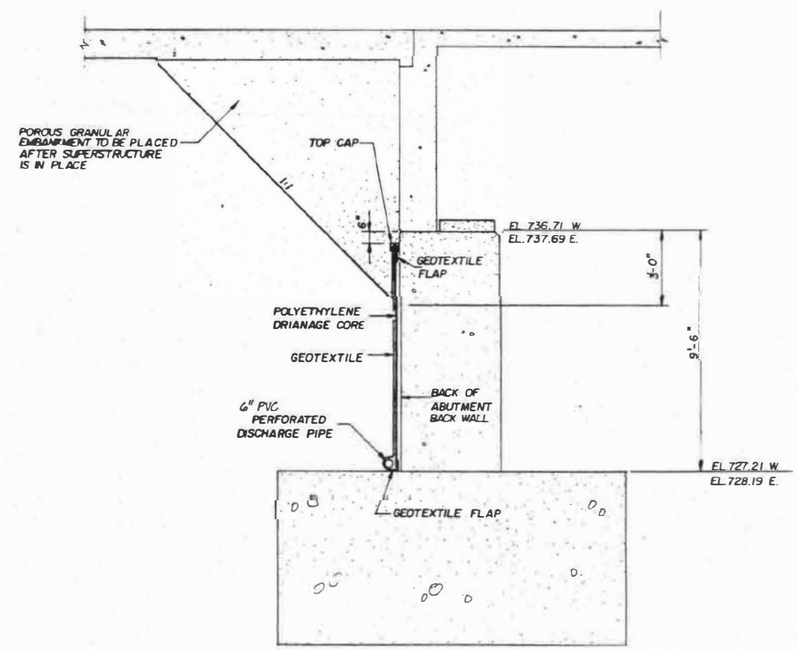

SECTION A-A THRU GEOCOMPOSITE WALL DRAIN

ABUTMENT SOIL DRAINAGE DETAILS

* NOTE: COST OF 6" PVC PERFORATED DISCHARGE PIPE SHALL BE INCLUDED IN GEOCOMPOSITE WALL DRAIN

FOR INFORMATION ONLY

MODEL: Default
FILE NAME: pw:\\pwidmsnwm.dot.illinois.gov:PWIDOT\Documents\DOT Offices\District 4\Projects\D4_68F48\CADData\CADsheets\D468F48-sht-details.dgn

USER NAME = recendezr	DESIGNED -	REVISED -	STATE OF ILLINOIS DEPARTMENT OF TRANSPORTATION	BEARING DETAILS			F.A.I RTE.	SECTION	COUNTY	TOTAL SHEETS	SHEET NO.
	DRAWN -	REVISED -					39	*	WOODFORD	27	25
PLOT SCALE = 2.0000 ' / in.	CHECKED -	REVISED -							CONTRACT NO. 68F48		
PLOT DATE = 1/3/2020	DATE -	REVISED -		SCALE:	SHEET OF SHEETS	STA. TO STA.		ILLINOIS	FED. AID PROJECT		

*102[(2HVB)BR;HB-1;HB;HB-2]BP

SN 102-0062
TOWNSHIP ROAD 229 OVER I-39

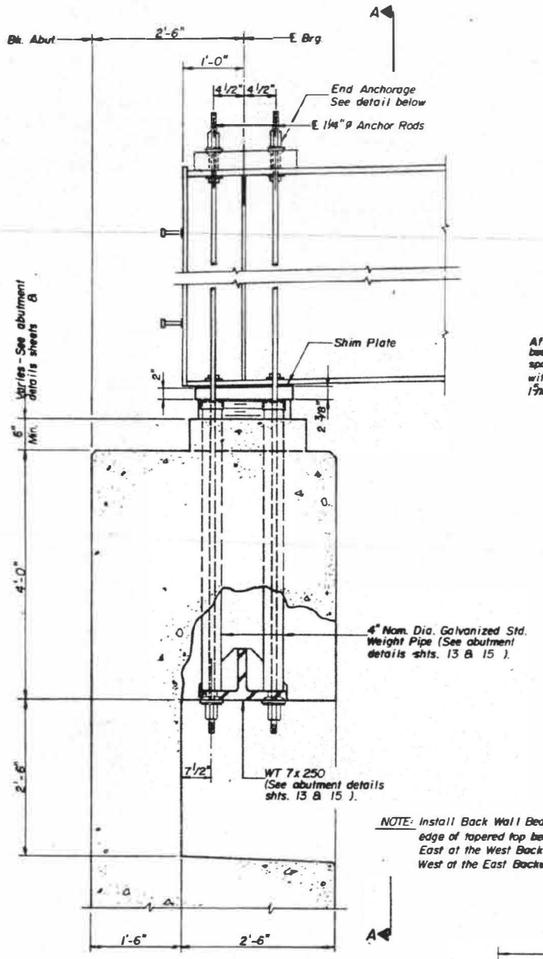

ELEVATION

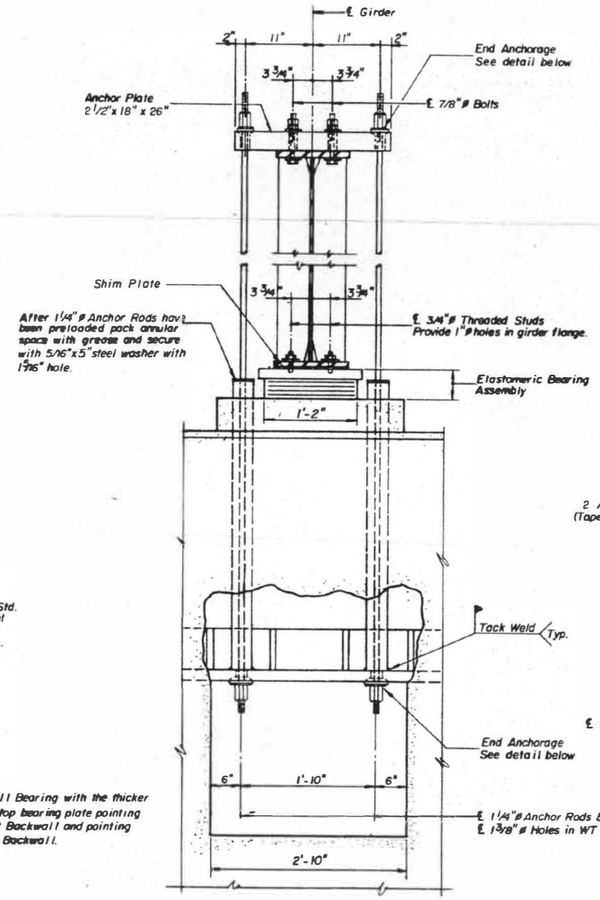

NOTE: Install Back Wall Bearing with the thicker edge of tapered top bearing plate pointing East at the West Backwall and pointing West at the East Backwall.

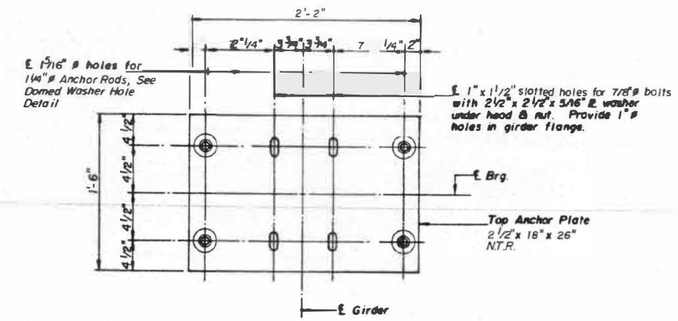

PLAN - TOP ANCHOR PLATE

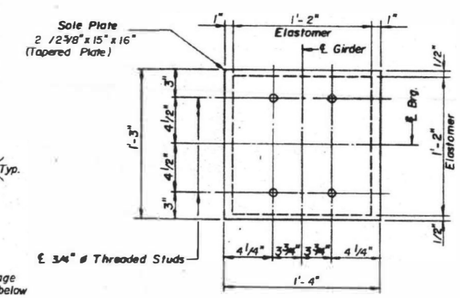

PLAN-SOLE PLATE
ELASTOMERIC BEARING

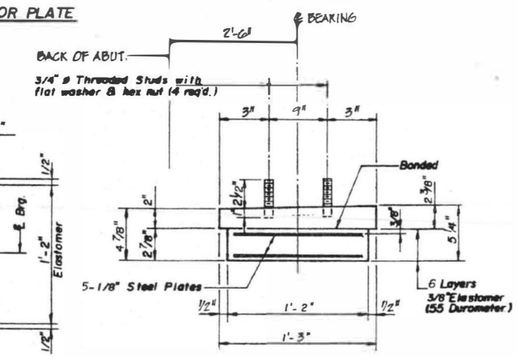

ELASTOMERIC BEARING

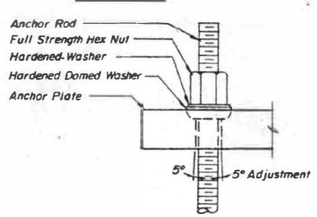

END ANCHORAGE DETAIL

NOTE: The Contractor may submit an equivalent system for approval of the Engineer before ordering of Materials.

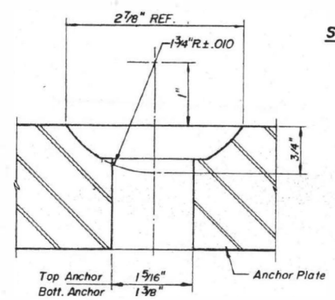

DOMED WASHER HOLE DETAIL

SECTION A-A

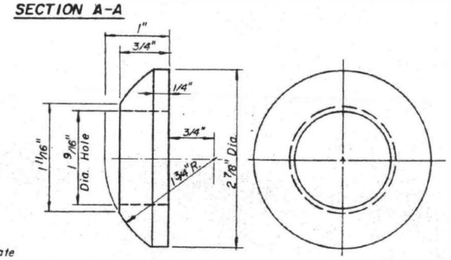

Material to meet the chemical and mechanical requirements of F436 for "Hardened Steel Washers".

DOMED WASHER DETAILS

NOTE:

1. 1 1/4"ø Anchor Rods shall be epoxy coated and shall meet the requirements of A.A.S.H.T.O. M275-79, Type II bars with minimum tensile strength of 150,000 p.s.i. and minimum yield strength of 120,000 p.s.i.
2. Initially stress each threadbar to 28 kips after anchorage is set. After completing pouring sequence 1 & 2 of the deck slab stress each threadbar an additional 10 kips.
3. Top Anchor Plate and Elastomeric Bearing Sole Plate shall be A.A.S.H.T.O. M223, Grade 50 Steel.

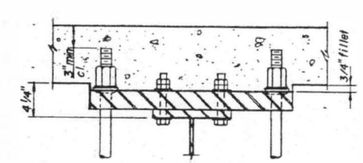

FILLET DETAIL @ ABUT. BK. WALL

BILL OF MATERIAL
TWO WALLS

Item	Unit	Total
Elastomeric Bearing Assembly - Type I	Each	10

FOR INFORMATION ONLY

USER NAME = recendezr	DESIGNED -	REVISED -	STATE OF ILLINOIS DEPARTMENT OF TRANSPORTATION
	DRAWN -	REVISED -	
PLOT SCALE = 2.0000 ' / in.	CHECKED -	REVISED -	
PLOT DATE = 1/3/2020	DATE -	REVISED -	

BEARING & ABUTMENT WALL DETAILS

SCALE: SHEET OF SHEETS STA. TO STA.

F.A.I RTE.	SECTION	COUNTY	TOTAL SHEETS	SHEET NO.
39	*	WOODFORD	27	26
		CONTRACT NO. 68F48		
	ILLINOIS	FED. AID PROJECT		

*102[(2HVB)BR;HB-1;HB;HB-2]BP

MODEL: Default
FILE NAME: pw:\\pwincom.dot.illinois.gov:PWIDOT\Documents\IDOT Offices\District 4\Projects\D4_68F48\CADData\CADsheets\D468F48-sht-details.dgn

SN 102-0062
TOWNSHIP ROAD 229 OVER I-39

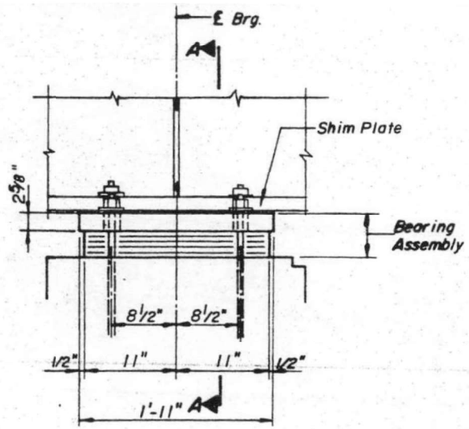

ELEVATION

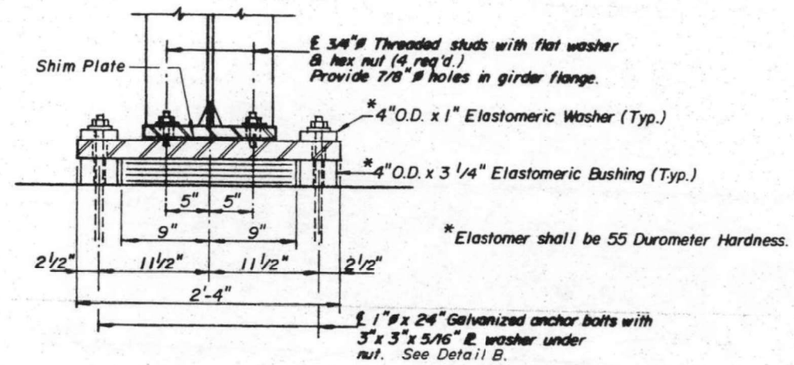

SECTION A-A

TYPE I ELASTOMERIC EXP. BRG.
AT ABUTMENT FRONT WALL

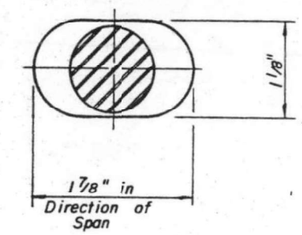

DETAIL B

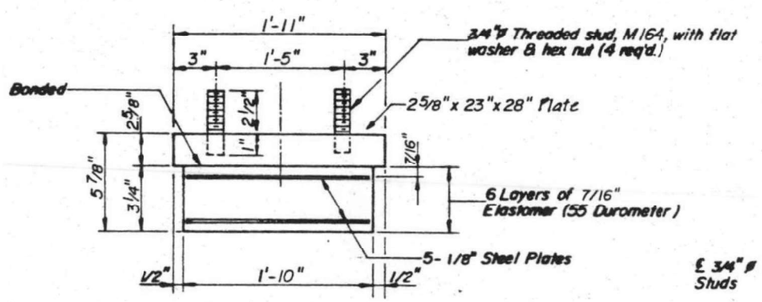

BEARING ASSEMBLY

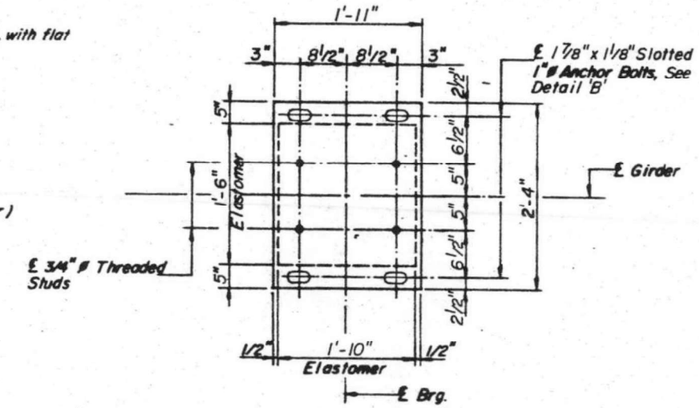

PLAN – TOP ⅊

NOTES:

1. Bearing Plates shall be A.A.S.H.T.O. M223, Grade 50 Steel.
2. See Sht. #11 for Anchor Bolt installation.

FOR INFORMATION ONLY

MODEL: Default
FILE NAME: pw:\\dotnaproxn.dot.illinois.gov:PWIDOT\Documents\IDOT Offices\District 4\Projects\D4_68F48\CADData\CADsheets\D468F48-str-details.dgn

USER NAME = recendzr	DESIGNED -	REVISED -	STATE OF ILLINOIS DEPARTMENT OF TRANSPORTATION	BEARING & ABUTMENT WALL DETAILS	F.A.I RTE.	SECTION	COUNTY	TOTAL SHEETS	SHEET NO.
	DRAWN -	REVISED -			39	"	WOODFORD	27	27
PLOT SCALE = 2.0000 ' / in.	CHECKED -	REVISED -					CONTRACT NO. 68F48		
PLOT DATE = 1/3/2020	DATE -	REVISED -		SCALE: SHEET OF SHEETS STA. TO STA.		ILLINOIS	FED. AID PROJECT		

*102[(2HVB)BR;HB-1;HB;HB-2]BP