FOR INFORMATION ONLY

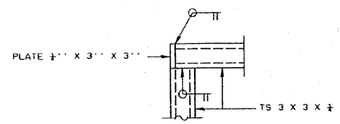

DETAIL A

DETAIL B

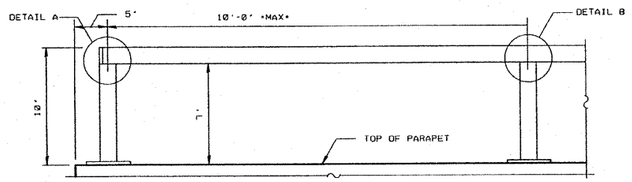

RAILING ELEVATION

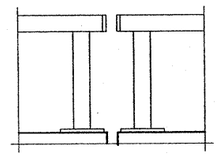

RAILING
ELEVATION AT EXPANSION JOINT

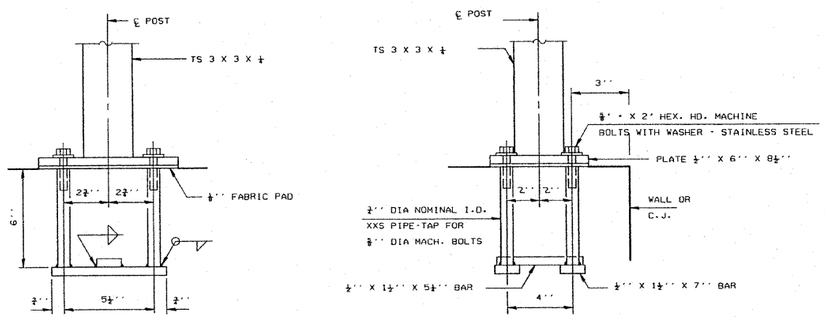

ANCHOR BOLT DETAILS

IN LIEU OF THE CAST-IN-PLACE ANCHOR DEVICE SHOWN, THE CONTRACTOR HAS THE OPTION OF DRILLING AND SETTING ⅝"DIA ASTM A276, TYPE 316 ADHESIVE OR NON SHRINK CEMENTITIOUS GROUTED ANCHOR BOLTS. EMBEDMENT SHALL BE ACCORDING TO THE MANUFACTURER'S SPECIFICATIONS, AND SHALL DEVELOP FULL STRENGTH OF THE ANCHOR.

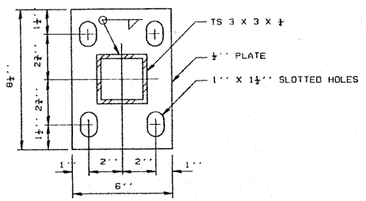

BASE PLATE

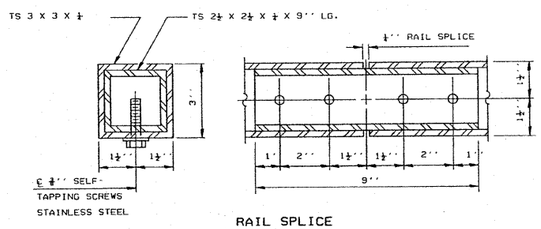

RAIL SPLICE

FOR INFORMATION ONLY

NOTES:

1. ALL STEEL RAIL ELEMENTS SHALL BE GALVANIZED IAW. THE SPECIFICATIONS.
2. ALL TUBING SHALL BE ASTM A500 GRADE B.

US Army Corps of Engineers
Chicago District

SYMBOL	AMENDMENT DESCRIPTION	DATE	APPROVED	SYMBOL	DESCRIPTION	DATE	APPROVED

DESIGNED BY: J.P. | DATE: 02/05/2008
DRAWN BY: M.A.N. | SCALE: AS SHOWN
CHECKED BY: S.R.T. | DRAWING CODE: DESPL37-S06-1.DGN
REVIEWED BY: J.J.S. | SOLICITATION NUMBER:

U.S. ARMY ENGINEER DISTRICT
CORPS OF ENGINEERS
CHICAGO, ILLINOIS

IDOT FAP RT 374 (IL ROUTE 374), MILWAUKEE AVE
SECTION 3268F-R-1
FLOODWALL
FLOODWALL HANDRAIL DETAILS

SHEET REFERENCE NUMBER:
S-07
SHEET 279 OF 279

PLOT DATE: 2/6/2008
FILENAME: D:\working\dms22836\Desp37-S07-1.dgn