CONTROLLER SEQUENCE

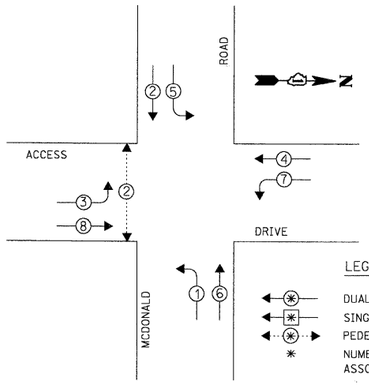

PHASE DESIGNATION DIAGRAM

EMERGENCY VEHICLE PREEMPTION SEQUENCE

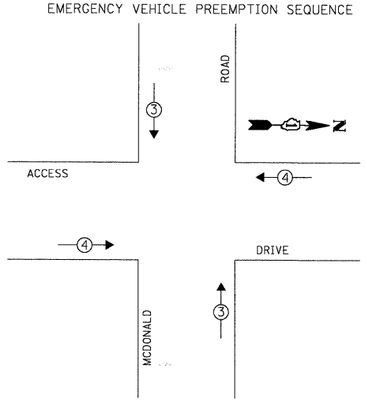

EXISTING EMERGENCY VEHICLE PREEMPTORS		
EMERGENCY VEHICLE PREEMPTOR	3	4
MOVEMENT	↓ ↑	← →

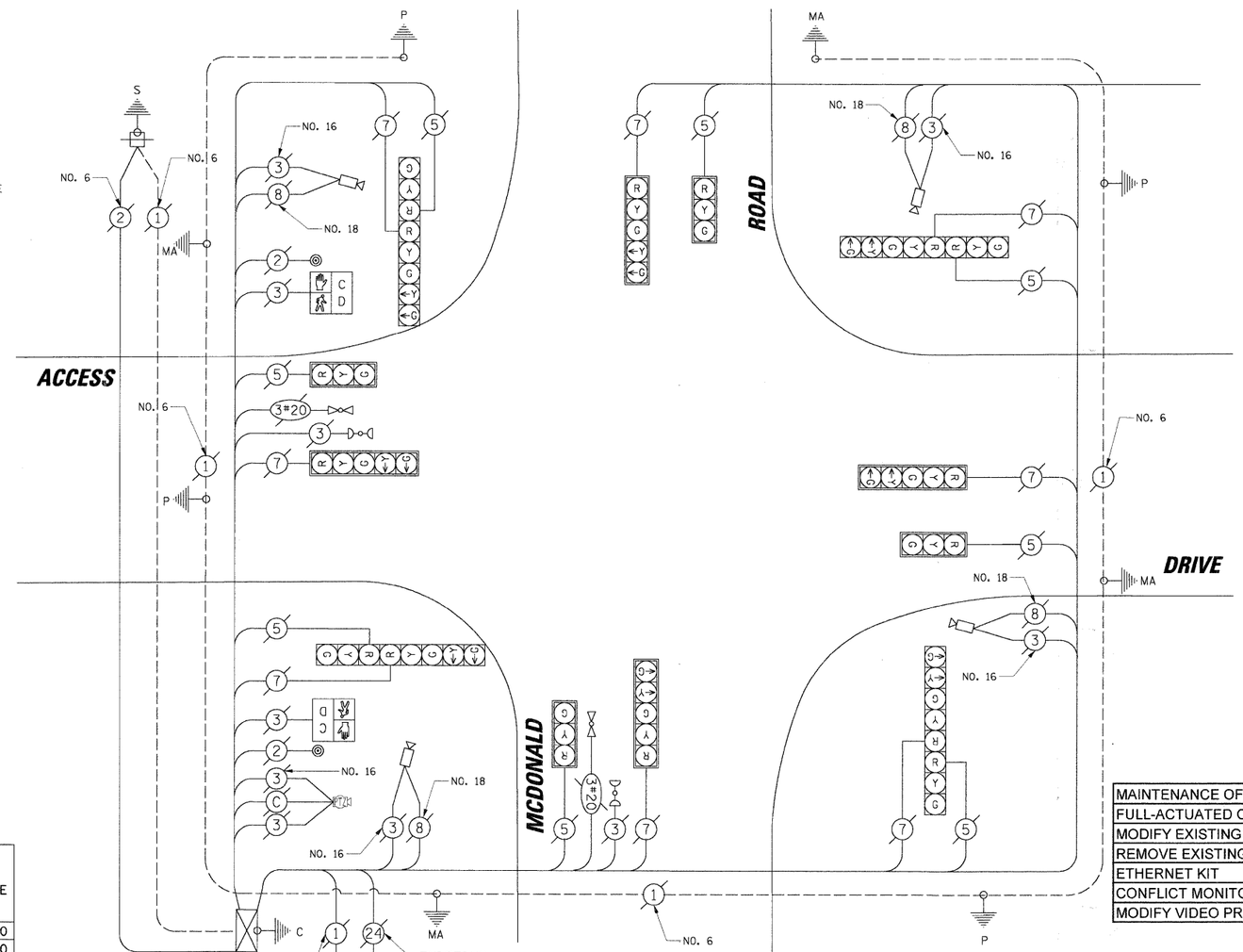

I.D.O.T. TRAFFIC SIGNAL INSTALLATION ELECTRICAL SERVICE REQUIREMENTS					TOTAL WATTAGE
TYPE	NO. OF LAMPS	WATTAGE INCAND.	WATTAGE LED	X % OPERATION	
SIGNAL (RED)	16		17	0.50	136.00
(YELLOW)	16		25	0.25	100.00
(GREEN)	16		15	0.25	60.00
ARROW	16		12	0.10	19.20
PED. SIGNAL	2		25	1.00	50.00
CONTROLLER	1		100	1.00	100.00
ILLUM. SIGN	-		25	0.05	-
VIDEO SYSTEM	1	-	150	1.00	150.00
FLASHER	-			0.50	-
				TOTAL =	615.20

ENERGY COSTS TO:

CITY OF SOUTH ELGIN

735 MARTIN DRIVE
SOUTH ELGIN, IL 60177

ENERGY SUPPLY: CONTACT: MIKE WIDHALM
PHONE: (847) 608-2376
COMPANY: COMED

FOUNDATION (DEPTH)	FT.	(m)
TYPE A - POST	4	(1.2)
D - CONTROLLER	4	(1.2)
E - M. ARM POLE		
24" (600mm)	10	(3.0)
30" (750mm)	15	(4.6)
36" (900mm)	15	(4.6)

CABLE SLACK	FT.	(m)
HANDHOLE	6.5	(2.0)
DOUBLE HANDHOLE	13	(4.0)
SIGNAL POST	2	(1.0)
CONTROLLER CAB.	1	(0.5)
FIBER OPTIC	13	(4.0)
ELECTRIC SERVICE	1	(0.5)
GROUND CABLE	1	(0.5)

VERTICAL	FT.	(m)
ALL FOUNDATIONS	3.5	(1.0)
MAST ARM (L) POLE	20'+L-2=	
	(6m+L-0.6m)=	
BRACKET MOUNTED	13	(4.0)
PED. PUSHBUTTON	4	(1.2)
ELECTRIC SERVICE	13.5	(4.1)
SERVICE TO GROUND	13.5	(4.1)
POST MOUNTED	6	(1.8)

RESTORATION OF WORK AREA. RESTORATION OF THE TRAFFIC SIGNAL WORK AREA SHALL BE INCIDENTAL TO THE RELATED PAY ITEM SUCH AS FOUNDATION, CONDUIT, HANDHOLE, TRENCH AND BACKFILL, ETC., AND NO EXTRA COMPENSATION SHALL BE ALLOWED. ALL ROADWAY SURFACES SUCH AS SHOULDERS, MEDIANS, SIDEWALKS, PAVEMENT, ETC. SHALL BE REPLACED IN KIND. ALL DAMAGE TO MOWED LAWNS SHALL BE REPLACED WITH AN APPROVED SOD, AND ALL DAMAGE TO UNMOWED FIELDS SHALL BE SEEDED IN ACCORDANCE WITH STANDARD SPECIFICATIONS 252 AND 250 RESPECTIVELY.

NOTE:
THE TRAFFIC SIGNAL CONTROLLER EQUIPMENT FOR THIS PROJECT SHALL BE "EAGLE" TO MATCH THE EXISTING ADJACENT SYSTEM.

CABLE PLAN LEGEND

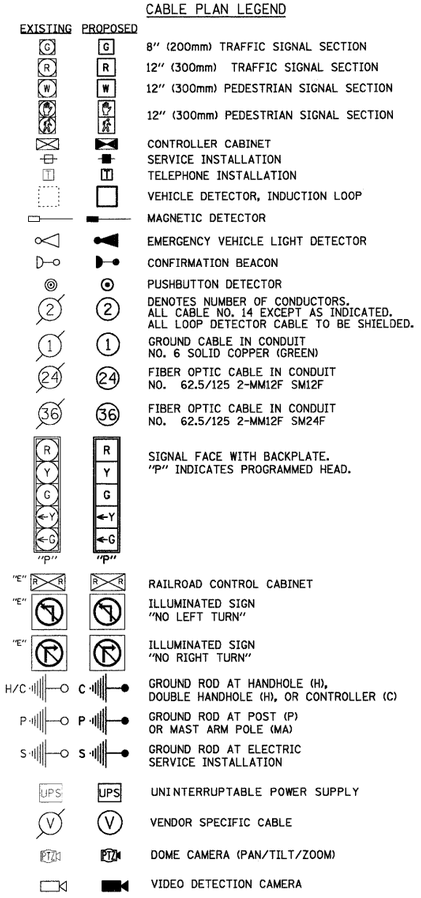

SCHEDULE OF QUANTITIES

ITEM	UNIT	TOTAL
MAINTENANCE OF EXISTING TRAFFIC SIGNAL INSTALLATION	EACH	1
FULL-ACTUATED CONTROLLER IN EXISTING CABINET, SPECIAL	EACH	1
MODIFY EXISTING CONTROLLER CABINET	EACH	1
REMOVE EXISTING TRAFFIC SIGNAL EQUIPMENT	EACH	1
ETHERNET KIT	EACH	1
CONFLICT MONITOR	EACH	1
MODIFY VIDEO PROCESSING UNIT	EACH	1

CONSTRUCTION NOTES:

1. REPLACE EXISTING CONTROLLER AND CONFLICT MONITOR.
2. INSTALL ETHERNET KIT.
3. MODIFY VIDEO PROCESSING UNIT TO COMMUNICATE OVER ETHERNET.

THE FOLLOWING ITEMS SHALL BE REMOVED BY THE CONTRACTOR AND SHALL BE DISPOSED OF BY THEM OUTSIDE THE RIGHT-OF-WAY AT THEIR EXPENSE. THE SALVAGE VALUE OF THE REMOVED EQUIPMENT SHALL BE REFLECTED IN THE CONTRACT BID PRICE.

1 EACH CONTROLLER AND CONFLICT MONITOR

CHRISTOPHER B. BURKE ENGINEERING LTD.
9575 West Higgins Road, Suite 600
Rosemont, Illinois 60018
(847) 823-0500

PROFILE | SURVEYED | PLOTTED | GRADES CHECKED | HORIZ. DATUM | STRUCTURE NOTATNS CHKD | NOTE BOOK | NO. | BY | DATE

PLAN | SURVEYED | PLOTTED | ALIGNMENT CHECKED | RT. OF WAY PROCESSED | CADD FILE NAME | NOTE BOOK | NO. | BY | DATE | GATE

FILE NAME = N:\kanecounty\070616\Traffic\CAB_mcdaccess.dgn	USER NAME = MWILLIAM	DESIGNED -	REVISED -	STATE OF ILLINOIS DEPARTMENT OF TRANSPORTATION	CABLE PLAN MCDONALD ROAD AT ACCESS DRIVE
	PLOT SCALE = 20'	DRAWN -	REVISED -		
	PLOT DATE = 1/28/2008	CHECKED -	REVISED -		SCALE:
		DATE -	REVISED -		

F.A.P. RTE.	SECTION	COUNTY	TOTAL SHEETS	SHEET NO.
336	06-00346-00-TL	KANE	69	15
		CONTRACT NO. 63011		
FED. ROAD DIST. NO.	ILLINOIS	FED. AID PROJECT		