ROUTE NO.	SECTION	COUNTY	TOTAL SHEETS	SHEET NO.
FAI 74	★	VERMILION	71	36
FED. ROAD DIST. NO. 7	ILLINOIS	FED. AID PROJECT-		

SHEET NO. 7
17 SHEETS

★ (10-92-8HB-4)BR

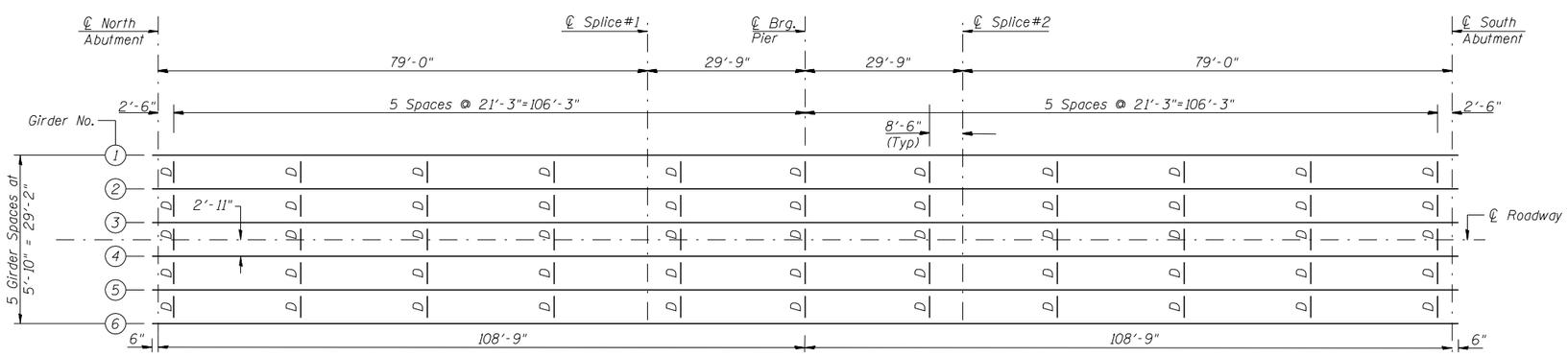

FRAMING PLAN

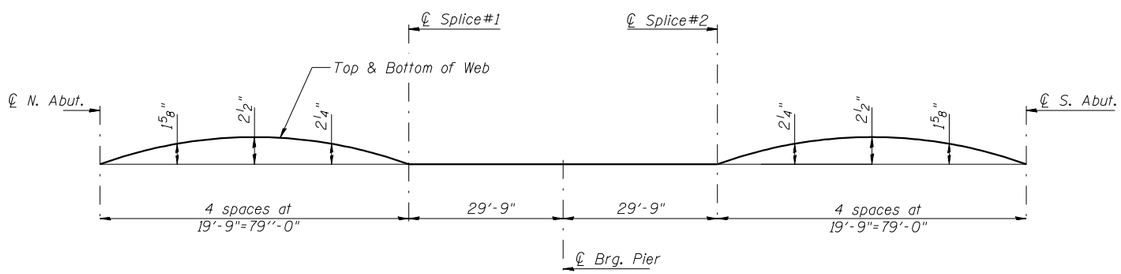

CAMBER DIAGRAM

* TOP OF WEB ELEVATIONS

	Girder 1 & 6	Girder 2 & 5	Girder 3 & 4
℄ N. Abut.	689.269	689.373	689.464
℄ Splice #1	689.525	689.630	689.721
℄ Brg. Pier	689.521	689.626	689.717
℄ Splice #2	689.517	689.622	689.713
℄ S. Abut.	689.269	689.373	689.464

*For Fabrication Only

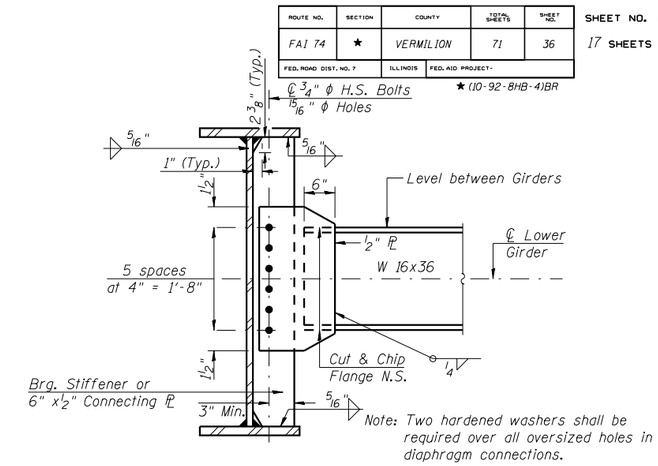

INTERIOR DIAPHRAGM D

(55 Required)

GIRDER ELEVATION

"NTR" denotes plates to which notch toughness requirements are applicable.

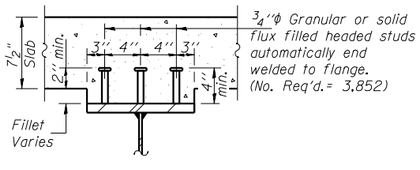

SECTION A-A

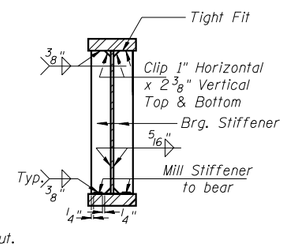

SECTION AT PIER

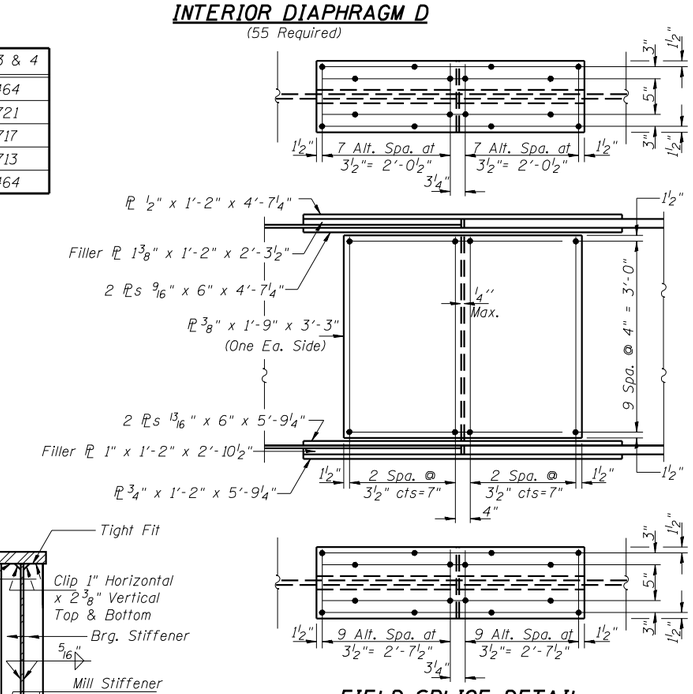

FIELD SPLICE DETAIL
SPLICE #1 & #2

(15/16" ϕ Holes for 7/8" ϕ H.S. Bolts)
NTR except filler plates.

Notes: Girder plates, Brg. Stiffeners, and splice plates shall be AASHTO M270 Grade 50.
Diaphragms and connecting plates shall be AASHTO M270 Grade 36.

REVISIONS	
NAME	DATE

LIN ENGINEERING, LTD.
210 W. Chestnut, Chatham, Illinois 62629
(217) 483-468 FAX (217) 483-4706
Designed By: MTH | Checked By: STD | Drawn By: JMD
Date: 11/02 | File: 092020 3.DGN

ILLINOIS DEPARTMENT OF TRANSPORTATION

FRAMING PLAN & GIRDER DETAILS
FAP ROUTE 840 (IL 49N)
OVER FAI RTE 74 (I-74)
SECTION (10-92-8HB-4) BR
VERMILION COUNTY
STA. 1160+20.53 (I-74)
STA. 50+00.00 (IL 49N)
STRUCTURE NO. 092-0203