F.A.I. RTE.	SECTION	COUNTY	TOTAL SHEETS	SHEET NO.
74	•	VERMILION	71	47
STA.		TO STA.		
FED. ROAD DIST. NO. _	ILLINOIS	FED. AID PROJECT		

• (10.92-8 HB-4)BR

CONTRACT NO. 70001

DETAIL OF DRAINAGE OF GRANULAR EMBANKMENT, SPECIAL

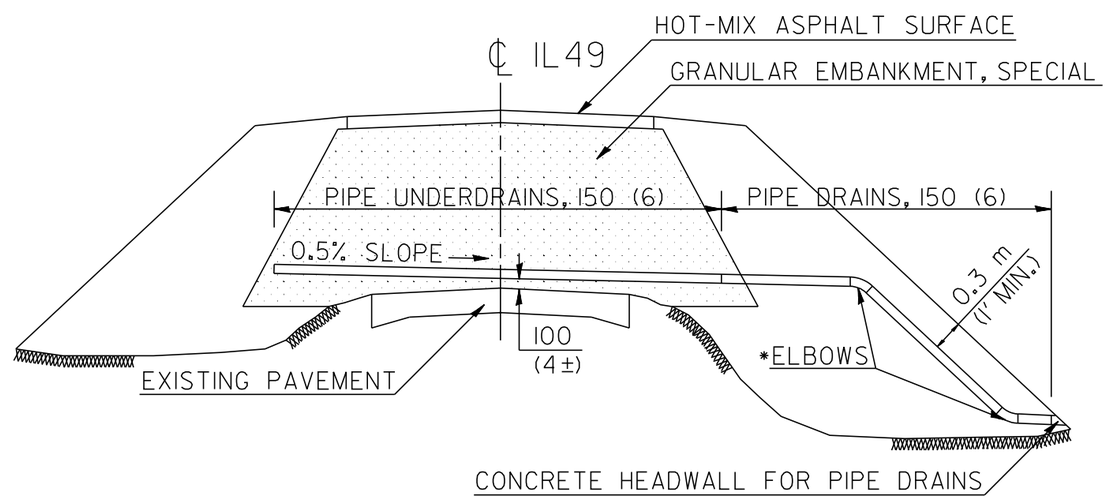

*PIPE ELBOWS INCLUDED IN UNIT PRICE FOR PIPE DRAIN ITEMS.

ALL DIMENSIONS ARE IN MILLIMETERS (INCHES)
UNLESS OTHERWISE SHOWN.

REVISIONS NAME	DATE

ILLINOIS DEPARTMENT OF TRANSPORTATION

DETAIL OF DRAINAGE OF GRANULAR EMBANKMENT, SPECIAL

SCALE: NONE
DATE: 06/2003

DRAWN BY: IYL
CHECKED BY: JH