CONTRACT NO. 98943

F.A.P. RTE.	SECTION	COUNTY	TOTAL SHEETS	SHEET NO.
*	**	ALEXANDER	65	8
STA.		TO STA.		
FED. ROAD DIST. NO.	ILLINOIS	FED. AID PROJECT		

* FAP 14 (US51/60/62)
** 138(N,TS-2,RS-2)

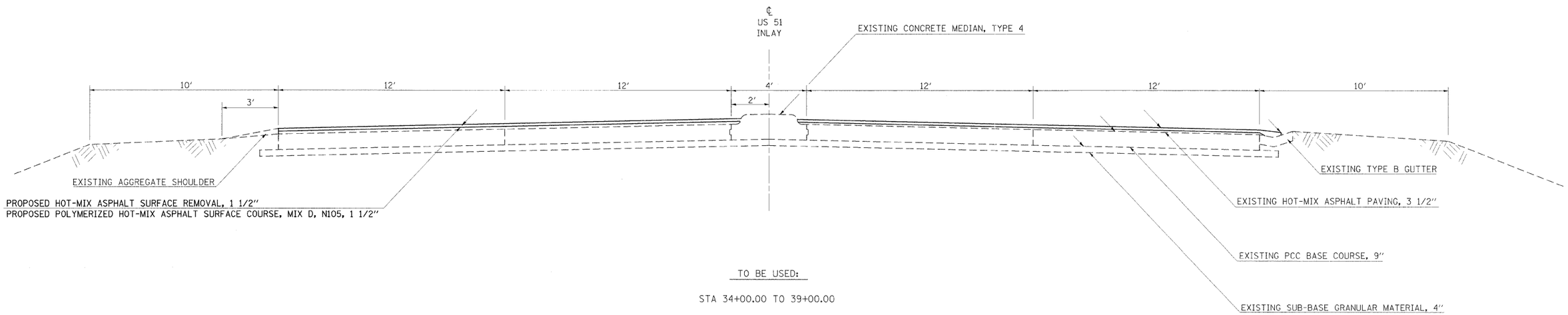

TO BE USED:

STA 34+00.00 TO 39+00.00

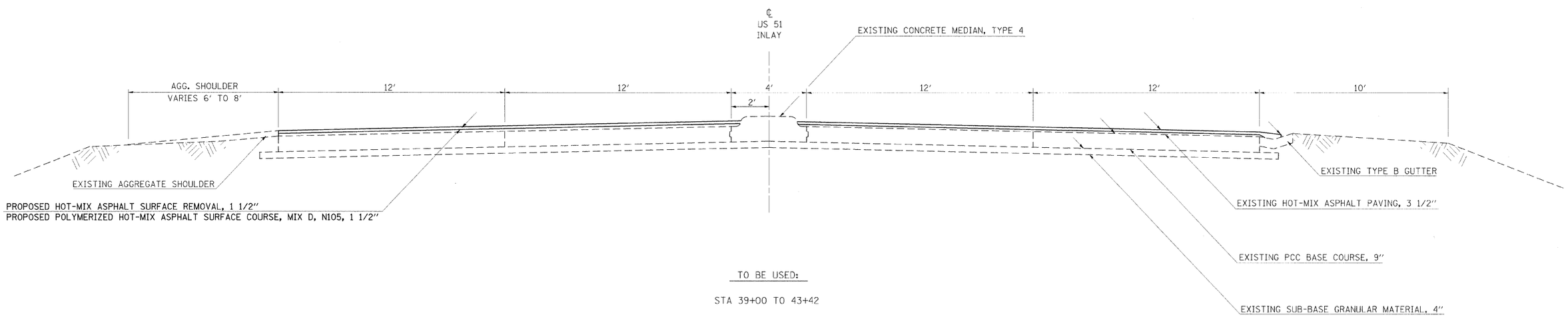

TO BE USED:

STA 39+00 TO 43+42

NOTE: MATCH EXISTING CROSS SLOPES

PLOT DATE = 11/29/2007
FILE NAME = c:\pro_jects\cd\98D206\cd98D206c3.dgn
PLOT SCALE = 50.0000 ' / IN.
USER NAME = pcw41

TYPICAL SECTIONS
US 51