TRUSS UNIT TABLE

Structure Number	Station	Design Truss Type	Exterior Units (2)			Interior Unit				Upper & Lower Chord		Verticals; Horizontals; Vertical, Horizontal, and Interior Diagonals		Camber at Midspan	Splicing Flange					
			No. Panels per Unit	Unit Lgth.(L_e)	Panel Lgth.(P)	No. Req'd.	No. Panels per Unit	Unit Lgth.(L_i)	Panel Lgth.(P)	O.D.	Wall	O.D.	Wall		Bolts		Weld Sizes		A	B
															No./Splice	Dia.	W	W_1		
7S0251070R090.9	1980+84	III-A	5	28'-4"	5'-3½"	1	6	33'-0"	5'-3½"	7"	5/16"	3¼"	5/16"	1¾"	6	1"	7/16"	5/16"	11½"	15"
7S0251070L099.5	2434+20	III-A	5	28'-4"	5'-3½"	1	6	33'-0"	5'-3½"	7"	5/16"	3¼"	5/16"	1¾"	6	1"	7/16"	5/16"	11½"	15"

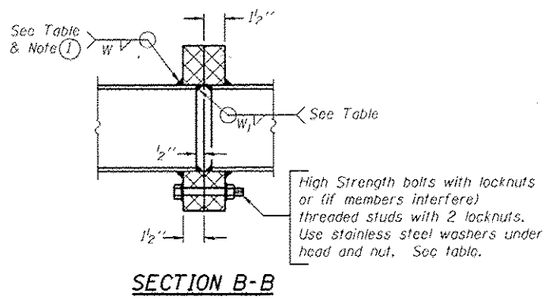

SECTION B-B

(1) Splicing Flanges shall be attached to each truss unit with the truss shop assembled to camber shown. Truss units shall be in proper alignment and flange surfaces shall be shop bolted into full contact before welding. Sufficient external welds or tacks shall be made to secure flanges until remaining welds are made after disassembly. Adjacent flanges shall be "match marked" to insure proper field assembly.

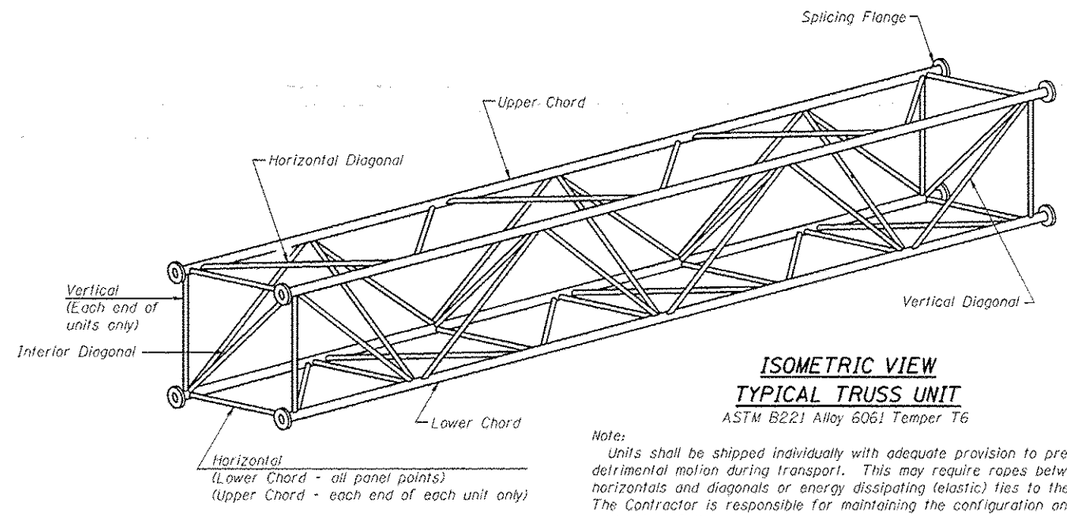

ISOMETRIC VIEW TYPICAL TRUSS UNIT

ASTM B221 Alloy 6061 Temper T6

Note:
Units shall be shipped individually with adequate provision to prevent detrimental motion during transport. This may require ropes between horizontals and diagonals or energy dissipating (elastic) ties to the vehicle. The Contractor is responsible for maintaining the configuration and protection of the units.

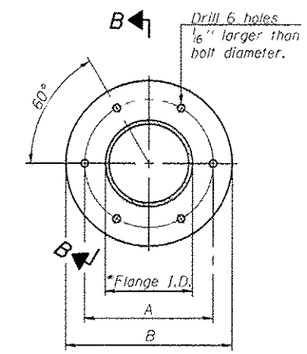

TRUSS TYPES I-A, II-A, & III-A

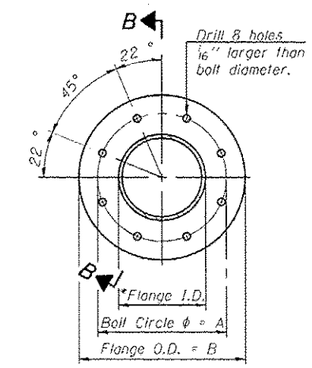

TRUSS TYPES II-A & III-A

SPLICING FLANGES

ASTM B221, Alloy 6061-T6
or ASTM B209, Alloy 6061-T651
*To fit O.D. of Chord with maximum gap of 1/16".

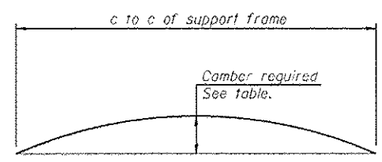

CAMBER DIAGRAM

Camber curve shown is theoretical. Actual camber attained by slope changes at splices between units.

CAMBER ATTAINMENT EXAMPLES:

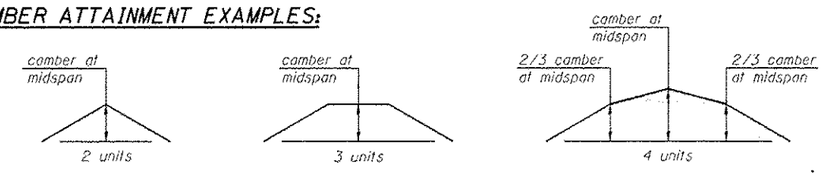

Camber shown is for fabrication only, measured with truss fully supported. (No-load condition)

OS4-A-2 6-1-12

FILE NAME = c:\pw_work\pwidot\steffenmk\d0358933\D746306-sht-details.dgn	USER NAME = steffenmk	DESIGNED -	REVISED -	STATE OF ILLINOIS DEPARTMENT OF TRANSPORTATION	OVERHEAD SIGN STRUCTURES – ALUMINUM TRUSS DETAILS FOR TRUSS TYPES I-A, II-A AND III-A	F.A. RTE.	SECTION	COUNTY	TOTAL SHEETS / SHEET NO.
	PLOT SCALE = 100.0000 ' / in.	DRAWN -	REVISED -			VARS	*	**	47 / 10
Default	PLOT DATE = 10/29/2013	CHECKED -	REVISED -			* D7 OVC SIN STR REPL 14-42		CONTRACT NO. 46306	
		DATE -	REVISED -		SCALE: SHEET OF SHEETS STA. TO STA.	ILLINOIS FED. AID PROJECT			

**EFFINGHAM, MACON, COLES