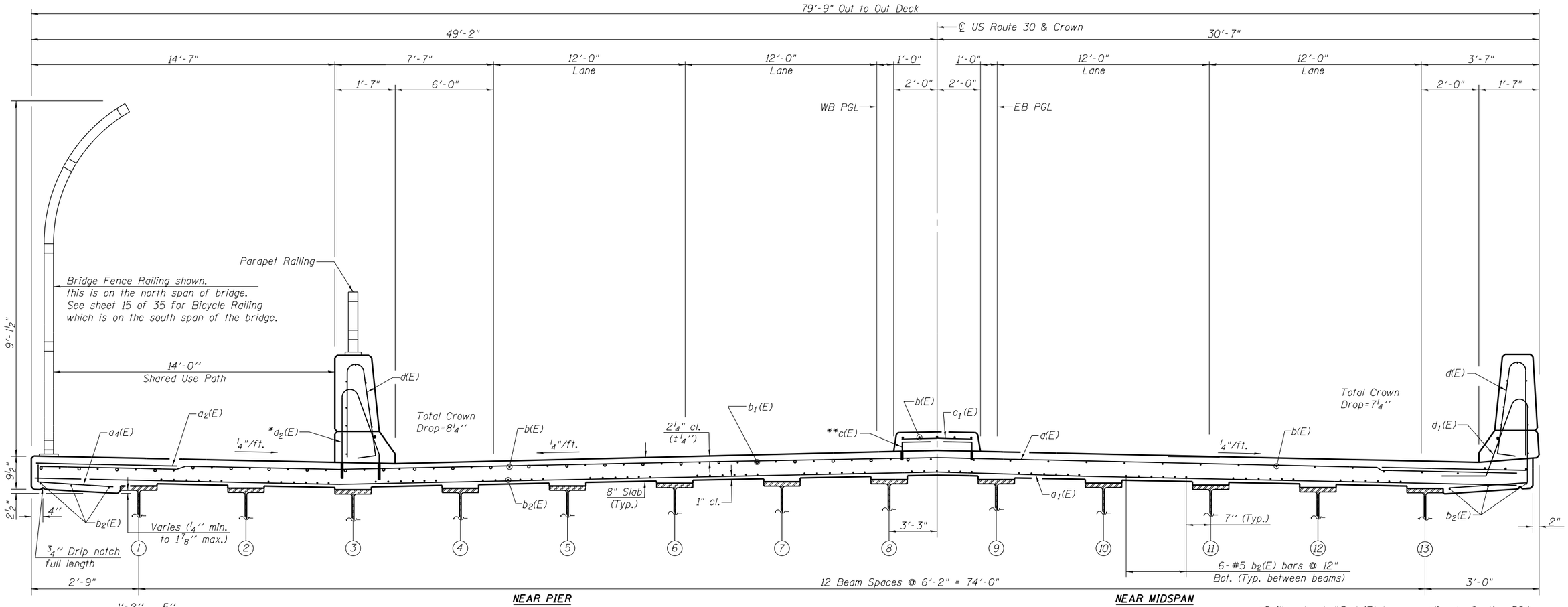

CROSS SECTION
(Looking South)

*Drill and set #5 $d_2(E)$ bar according to Section 584 of the Standard Specifications. Drilled holes shall be roughened or scored per manufacturer's recommendations. Maximum depth of hole shall not exceed 6". Cost included with Reinforcement Bars, Epoxy Coated.

**c(E) bar connected to ¾" ϕ Galvanized expansion anchor or Ferrule Lupe Slab Insert (Proof Load 6600 lb). Cost included with Reinforcement Bars, Epoxy Coated.

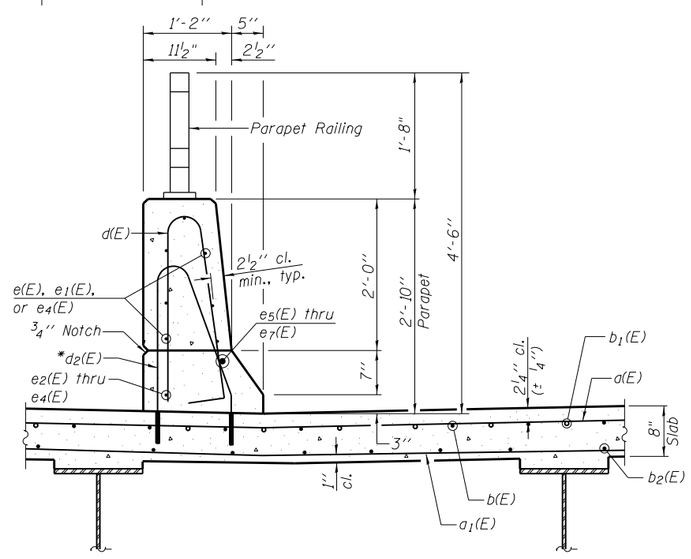

SECTION THRU EAST PARAPET
(Looking South)

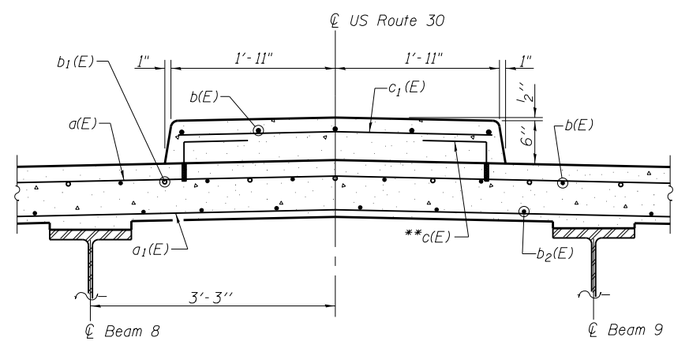

SECTION THRU MEDIAN
(Looking South)

V3 Companies of Illinois Ltd.
7325 Janes Avenue
Woodridge, IL 60517
630.724.9200 phone
630.724.9202 fax
www.v3co.com

USER NAME =	DESIGNED - WJV	REVISED
	CHECKED - CJB	REVISED
PLOT SCALE =	DRAWN - WJV	REVISED
PLOT DATE =	CHECKED - CJB	REVISED

STATE OF ILLINOIS
DEPARTMENT OF TRANSPORTATION

SUPERSTRUCTURE DETAILS - I
STRUCTURE NO. 016-1350
SHEET NO. 9 OF 35 SHEETS

F.A.P. RTE.	SECTION	COUNTY	TOTAL SHEETS	SHEET NO.
353	11-Y-A	COOK	354	194

CONTRACT NO. 60R19
ILLINOIS FED. AID PROJECT