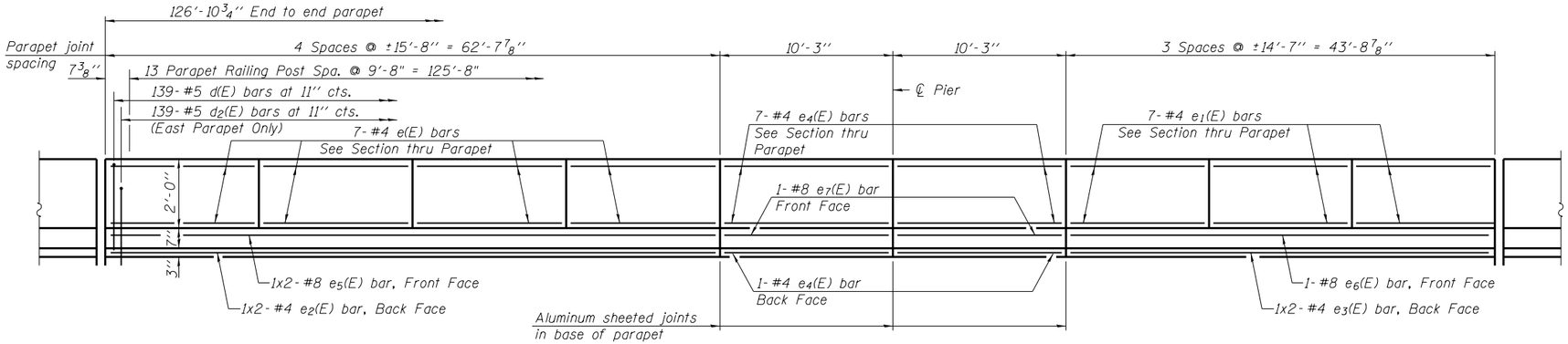

INSIDE ELEVATION OF PARAPET

(East parapet shown, west parapet similar but opposite hand)

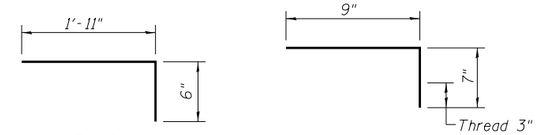

a4(E) Bar

c(E) Bar

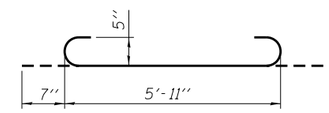

a3(E) BAR

MINIMUM BAR LAP

(Parapet)
#4 bar = 2'-0"
#8 bar = 5'-2"

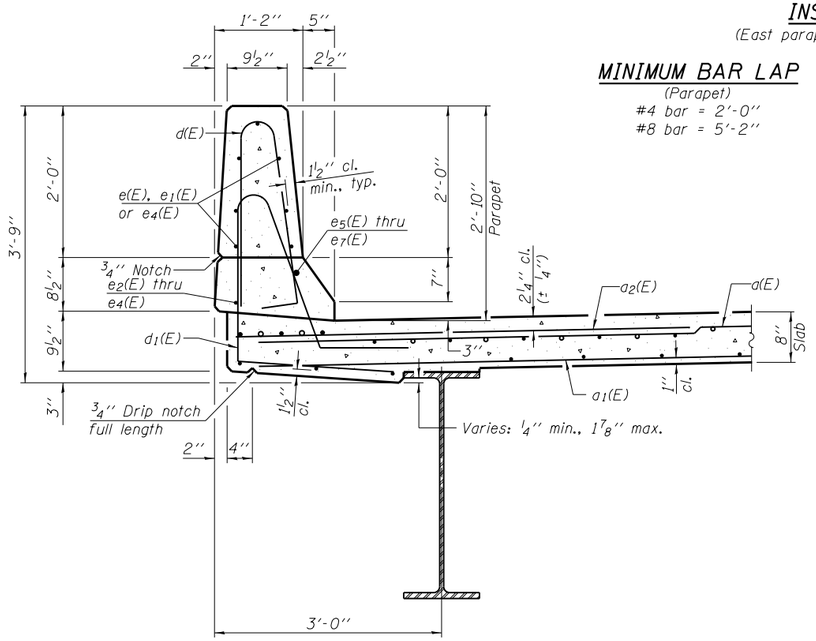

SECTION THRU WEST PARAPET

(Looking North)

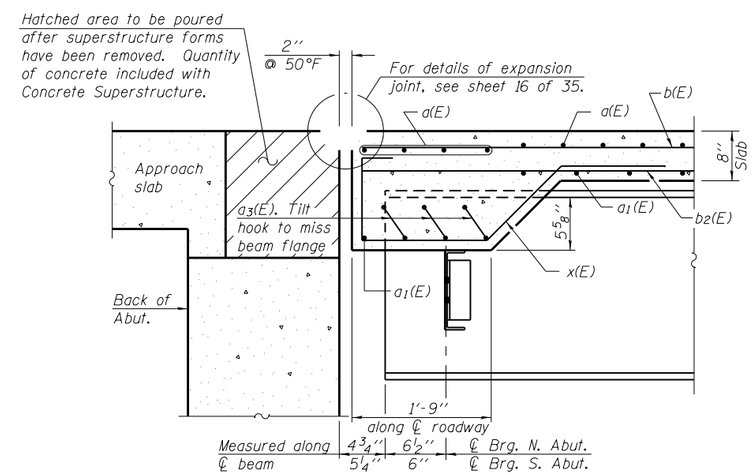

SECTION A-A

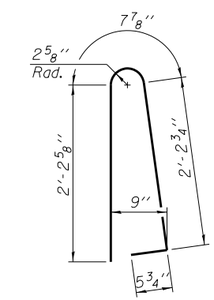

BAR d(E)

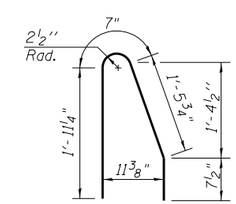

BAR d2(E)

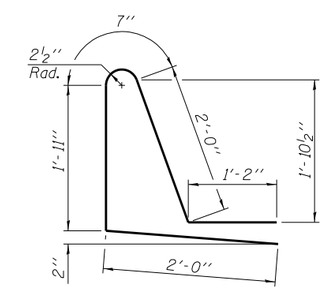

BAR d1(E)

SUPERSTRUCTURE BILL OF MATERIAL

Bar	No.	Size	Length	Shape
a(E)	678	#5	28'-2"	
a1(E)	620	#5	21'-9"	
a2(E)	436	#6	6'-6"	
a3(E)	72	#5	7'-1"	
a4(E)	127	#5	2'-5"	
b(E)	435	#5	27'-5"	
b1(E)	80	#6	42'-0"	
b2(E)	468	#5	23'-3"	
c(E)	254	#5	1'-4"	
c1(E)	127	#5	3'-7"	
d(E)	278	#5	5'-7"	
d1(E)	139	#5	7'-8"	
d2(E)	139	#5	4'-8"	
e(E)	56	#4	15'-4"	
e1(E)	42	#4	14'-3"	
e2(E)	4	#4	32'-2"	
e3(E)	4	#4	22'-9"	
e4(E)	32	#4	9'-11"	
e5(E)	4	#8	33'-9"	
e6(E)	2	#8	43'-4"	
e7(E)	4	#8	9'-11"	
x(E)	144	#5	6'-5"	
Reinforcement Bars, Epoxy Coated			Pound	75,160
Concrete Superstructure			Cu. Yds.	304.4
Bridge Deck Grooving			Sq. Yd.	761
Protective Coat			Sq. Yd.	1243

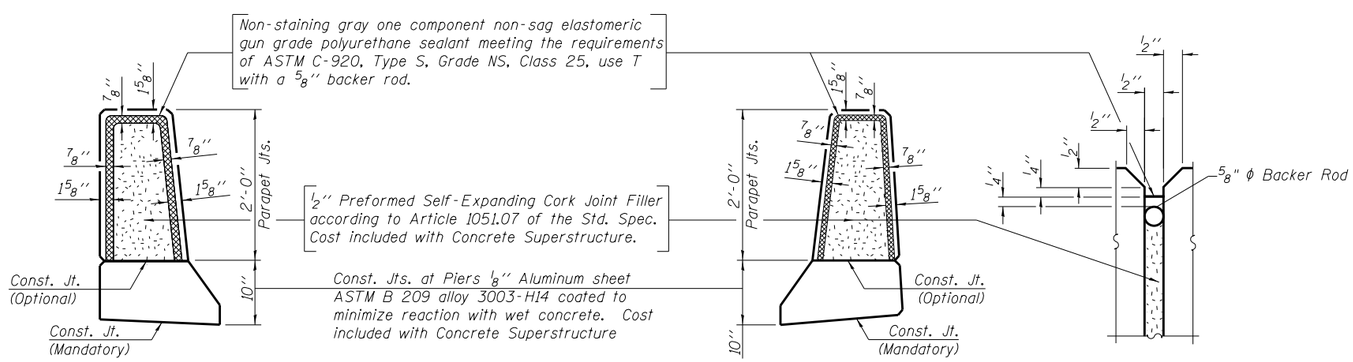

EAST PARAPET JOINT DETAILS

WEST PARAPET JOINT DETAILS

Notes:
See Sheet 14 of 35 for Parapet Railing Details.
Bars indicated thus 1x3-#4 etc. indicates 1 line of bars with 3 lengths per line.
Space reinforcement to miss parapet railing anchor bolts.

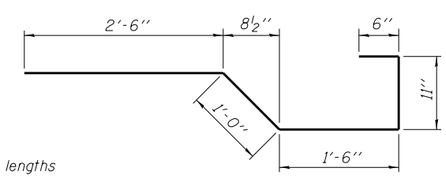

BAR x(E)

V3 Companies of Illinois Ltd.
7325 Janes Avenue
Woodridge, IL 60517
630.724.9200 phone
630.724.9202 fax
www.v3co.com

USER NAME =	DESIGNED - WJV	REVISED	
	CHECKED - CJB	REVISED	
PLOT SCALE =	DRAWN - WJV	REVISED	
PLOT DATE =	CHECKED - CJB	REVISED	

STATE OF ILLINOIS
DEPARTMENT OF TRANSPORTATION

SUPERSTRUCTURE DETAILS - II
STRUCTURE NO. 016-1350
SHEET NO. 10 OF 35 SHEETS

F.A.P. RTE.	SECTION	COUNTY	TOTAL SHEETS	SHEET NO.
353	11-Y-A	COOK	354	195
		CONTRACT NO. 60R19		
	ILLINOIS FED. AID PROJECT			