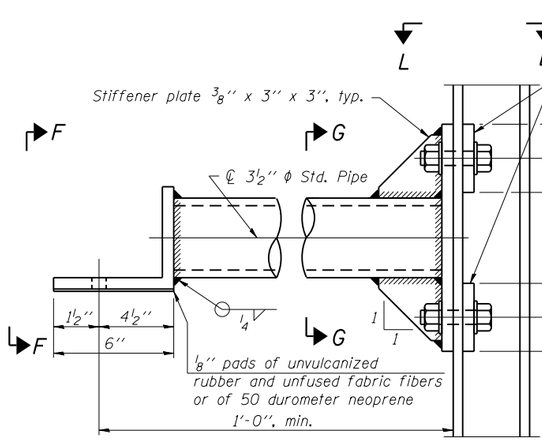

DETAIL A

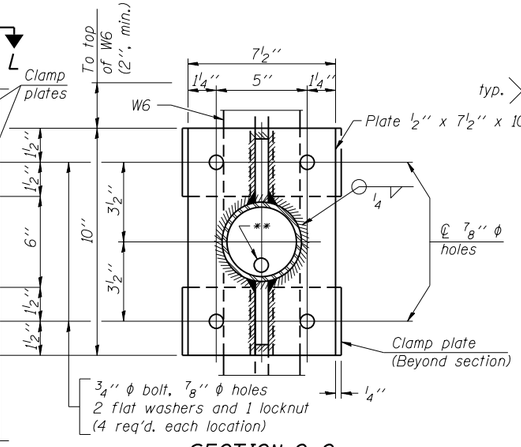

SECTION G-G

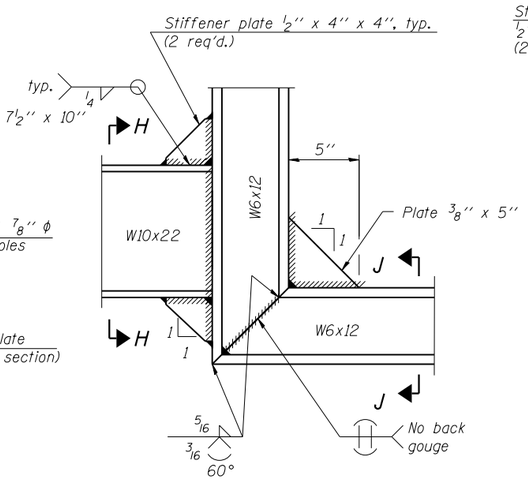

DETAIL B - WELDED W10x22 TO W6x12 CONNECTION

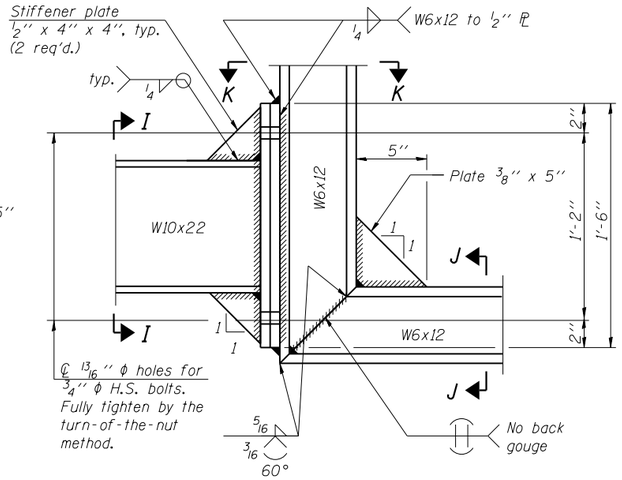

DETAIL B - ALTERNATE BOLTED W10x22 TO W6x12 CONNECTION

Alternate may be substituted by contractor to facilitate construction or galvanizing, especially on long struts for skewed bridges.

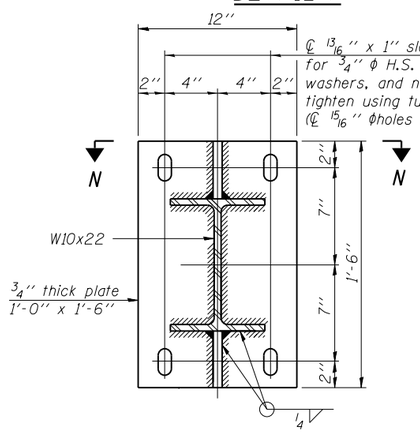

SECTION C-C

Steel beam or girder connection plate details

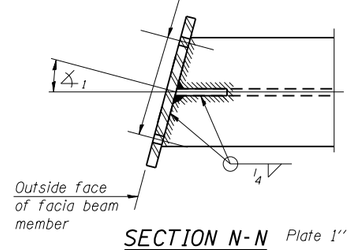

SECTION N-N

Skewed connection detail for W10x22 to facia beam.

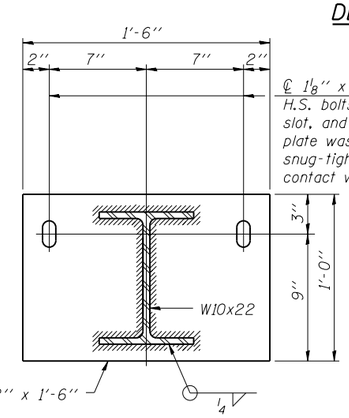

SECTION D-D

Concrete beam or girder connection plate details.

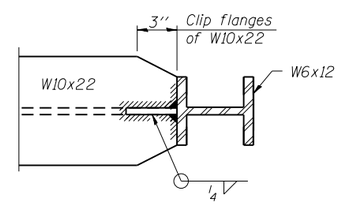

SECTION E-E

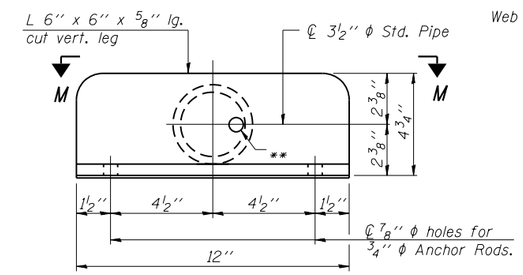

VIEW F-F

** 13/16'' ϕ holes for galvanizing. After galvanizing, install 7/8'' ϕ A307 hot-dip galvanized bolt to close hole in angle. (No bolt required in 1/2'' plate.)

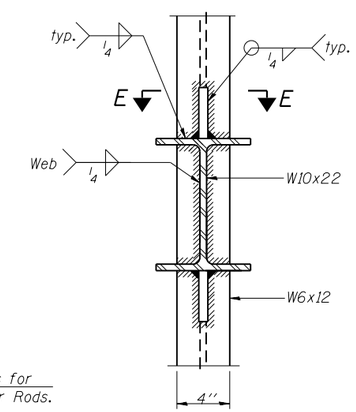

SECTION H-H

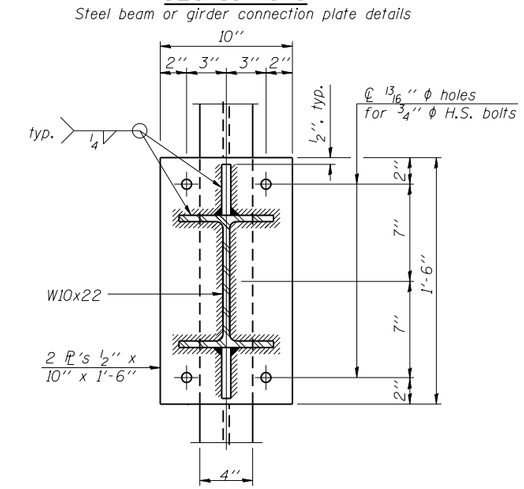

SECTION I-I

Note: For constant slab overhang at facia beam, ∡1 = ∡2 = sign angle. For flared beams or other special cases where ∡1 ≠ ∡2, ∡1 = sign angle.

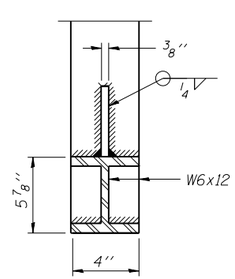

SECTION J-J

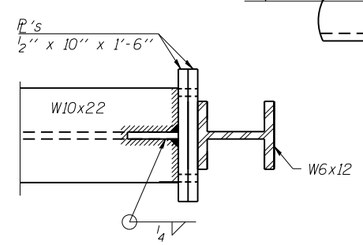

SECTION K-K

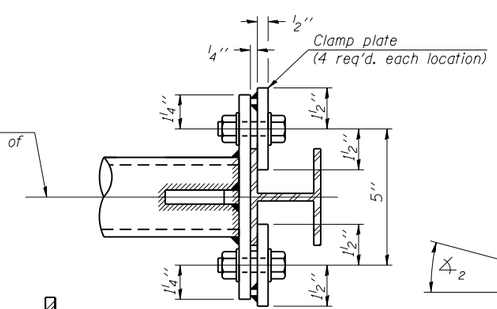

SECTION L-L

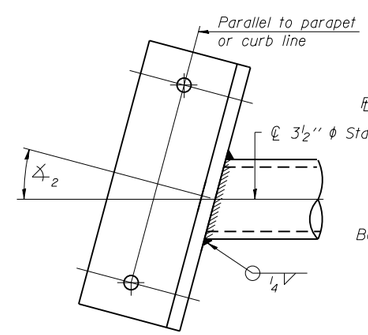

SECTION M-M

Skewed connection detail for 3 1/2'' ϕ pipe to parapet.

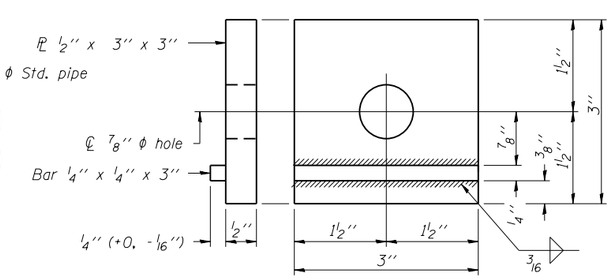

CLAMP PLATE DETAILS

BM-3 6-1-12

FILE NAME = D468683-sht-BM sign str.dgn	USER NAME = wllewis	DESIGNED -	REVISED -	STATE OF ILLINOIS DEPARTMENT OF TRANSPORTATION	BRIDGE MOUNT SIGN STRUCTURES CONNECTION DETAILS	F.A.U. RTE.	SECTION	COUNTY	TOTAL SHEETS	SHEET NO.
MAURER-STUTZ ENGINEERS SURVEYORS		CHECKED -	REVISED -			6584	105: (72-7HB)BY	PEORIA	487	330
	PLOT SCALE =	DRAWN -	REVISED -			6585		CONTRACT NO. 68683		
	PLOT DATE = 1/24/2014	CHECKED -	REVISED -		SHEET NO. 3 OF 4 SHEETS		ILLINOIS FED. AID PROJECT			