PERMANENT SURVEY TIES

○ Permanent Survey Tie
□ Section Corner, 1/4 Corner, or other land corner.

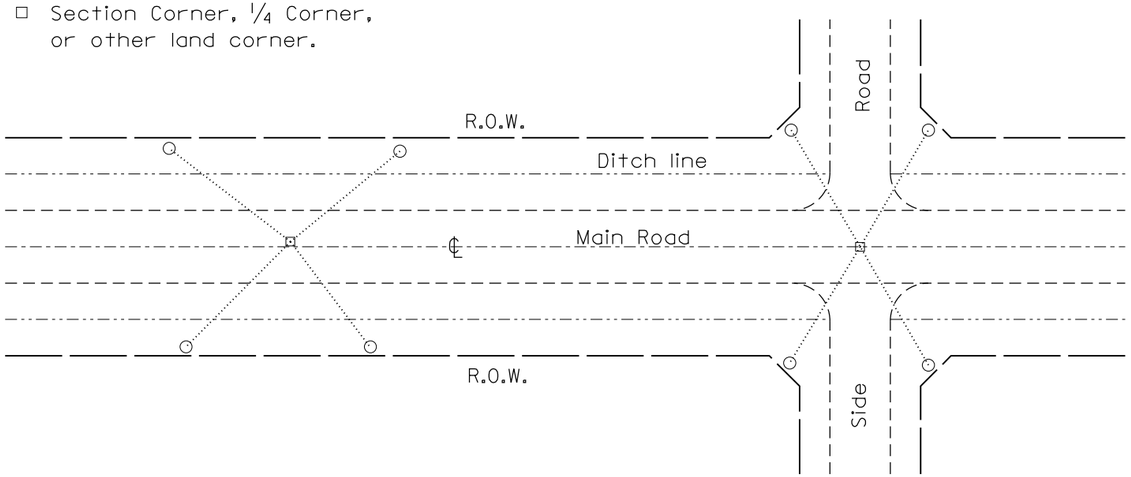

TYPICAL APPLICATION

GENERAL NOTES

1. The marker shall be cast in place of Class SI Concrete.
2. Tie marker shall be installed after the final seeding has been completed unless otherwise specified by the Engineer.
3. The tie distances to the section corner shall be measured and recorded by the surveyor setting the PSM. All ties shall be turned over to the IDOT Chief of Surveys or Chief of Plats for recordation.
4. All documentation shall be performed by a PLS

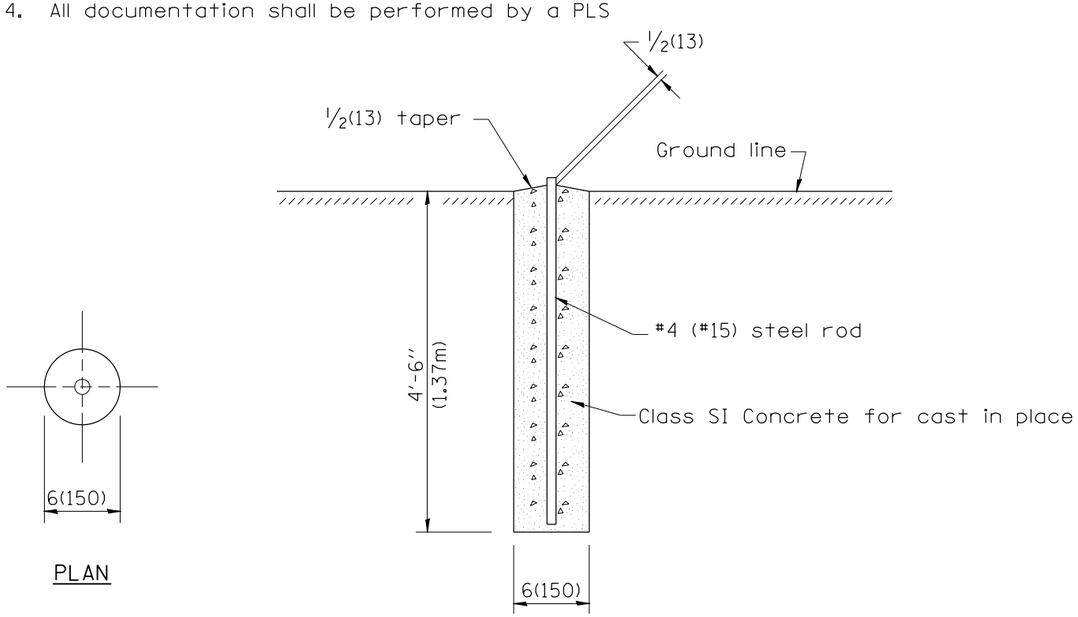

PLAN

SECTION

PERMANENT SURVEY MARKERS

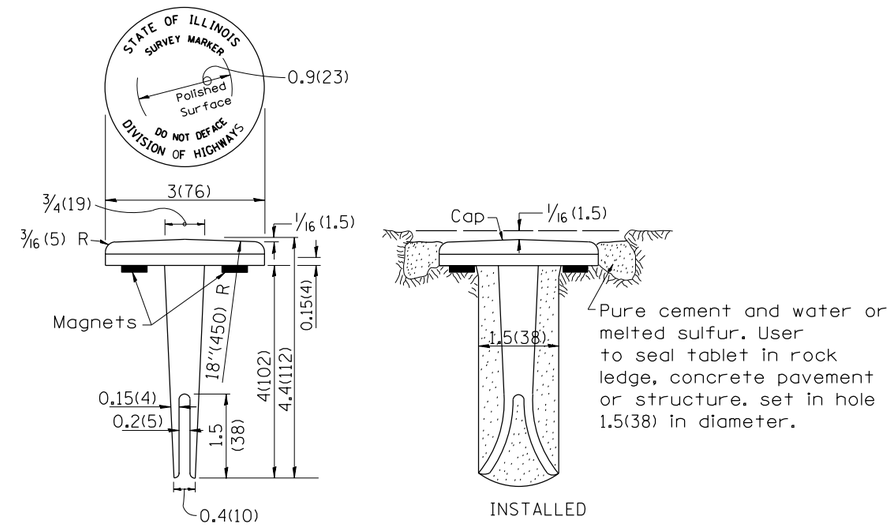

TYPE I

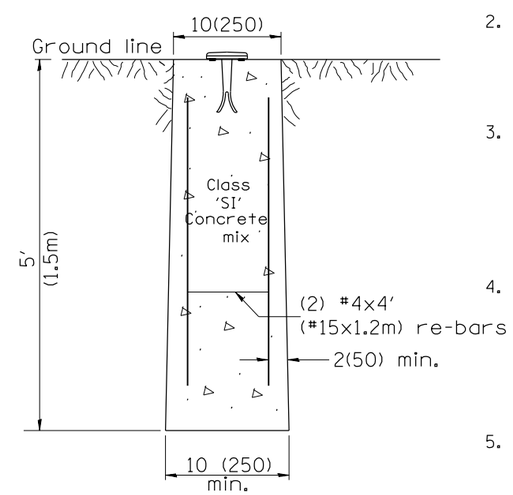

MARKER CAST IN PLACE
TYPE II

GENERAL NOTES

1. All type II markers shall be cast in place, and precast markers will not be allowed.
2. Two permanent magnets, each having a diameter of 3/4 (19) and a thickness of 1/4 (6), or equivalent, shall be attached to the underside of the tablet with an approved epoxy bonding agent.
3. The location of the markers shall be in accordance with the plans in general, the markers will be placed at the P.T.'s, P.C.'s, and P.I.'s llocated within the R.O.W. of horizontal curves and spaces along the tangents in a way that a minimum of two markers are always inter-visible, and not to exceed 1000' (300m).
4. The markers shall be placed under the direction of the Engineer and shall be installed in a workmanlike manner in order that there will be no further settlement or horizontal shifting. The monuments shall be placed in a way that the survey point will fall within the portion of the plaque provided for that purpose.
5. The project designation, the centerline station, the survey point, and the elevation shall be permanently marked by the use of metal dies after marker has been installed.

All dimensions are in inches (millimeters) unless otherwise noted.

01-01-97	RENUM. D-3.01, NEW REVISION BOX, REVISED	T.P.	10-16-06	REVISED TO 2007 SPEC.	M.A.
	TITLE BOX, ADD DESIGNER NOTE		01-04-11	REVISED FOR CORRECTIONS	R.D.
07-07-98	ADD DESIGNER NOTE	J.A.	08-21-13	CHANGED MIN. DIAMETER	R.D.
05-24-06	REMOVED GEN. NOTE UNDER TIES	M.A.			

STATE OF ILLINOIS
DEPARTMENT OF TRANSPORTATION

PERMANENT SURVEY TIE &
PERMANENT SURVEY MARKERS TY.I – TY.II

NOT TO SCALE — CADD STD. 667101-D4

F.A. RTE.	SECTION	COUNTY	TOTAL SHEETS	SHEET NO.
			487	404
		CONTRACT NO.		
FED. ROAD DIST. NO.	ILLINOIS	FED. AID PROJECT		