TYPICAL TREATMENT:
MULTI-LANE WITH CCC&G

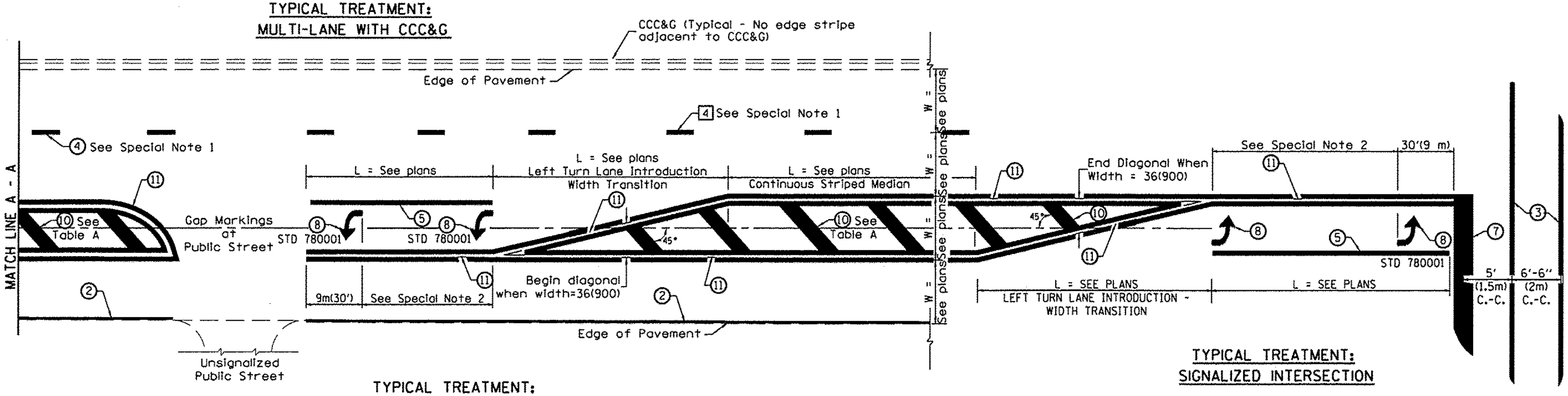

TYPICAL TREATMENT:
2-LANE WITH SHOULDER

TYPICAL TREATMENT:
SIGNALIZED INTERSECTION

TYPICAL MEDIAN TRANSITIONS

FLUSH PAVED MEDIAN: RESTRICTED LEFT TURN LANE

TABLE A

RECOMMENDED SPACING BETWEEN DIAGONAL LINES

SPEED LIMIT RANGE	CONTINUOUS	INTERSECTION CHANNELIZATION (Includes Width Transitions for Median and Left Turn Lane Introductions)
Less Than 30 mph (50 km/h)	50' (15m)	15' (5m)
30 - 45 mph (50 - 70 km/h)	75' (23m)	20' (6m)
Over 45 mph (70 km/h)	150' (46m)	30' (9m)

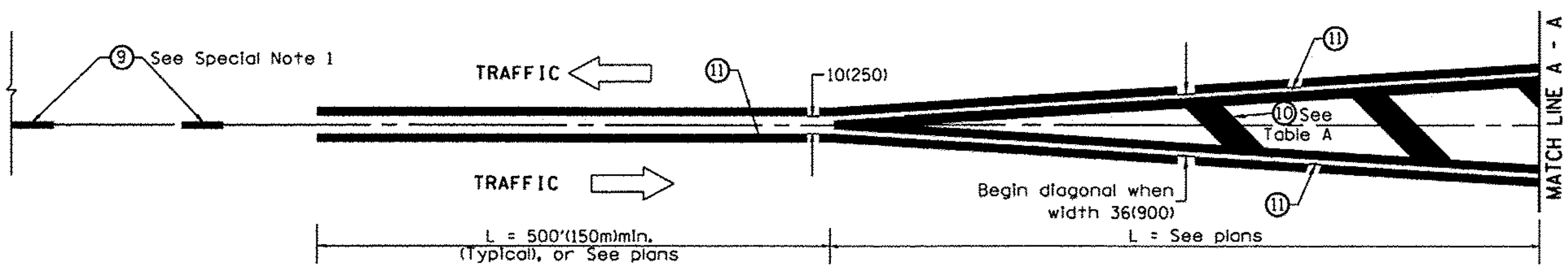

MEDIAN INTRODUCTION - WIDTH TRANSITIONS

All dimensions are in inches (millimeters) unless otherwise noted.

STATE OF ILLINOIS
DEPARTMENT OF TRANSPORTATION

TYPICAL PAVEMENT MARKINGS

NOT TO SCALE

SHT. 2 OF 2
CADD STD. 780001-04

F.A.P RTE.	SECTION	COUNTY	TOTAL SHEETS	SHEET NO.
698	1261	WOODFORD	15	15
		CONTRACT NO. 68863		
FED. ROAD DIST. NO.	ILLINOIS FED. AID PROJECT			