Notes:
Space reinforcement in cap to miss anchor bolts.
Pour steps monolithically with cap.
For details of piles, see sheet 29 of 33.
For spacing of v_3(E) bars, see sheet 15 of 33.
For anchor bolt locations, see sheet 15 of 33.

PILE DATA

Type: HP14x89
Nominal Required Bearing: 546 kips
Factored Resistance Available: 268 kips
Est. Length: 67 feet
No. Production Piles: 7
No. Test Piles: 1

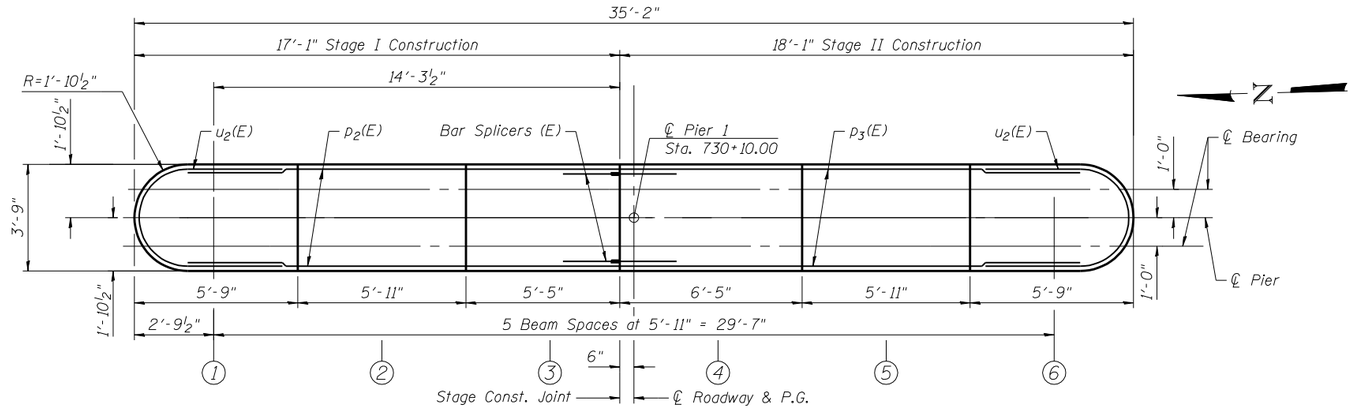

TOP PLAN

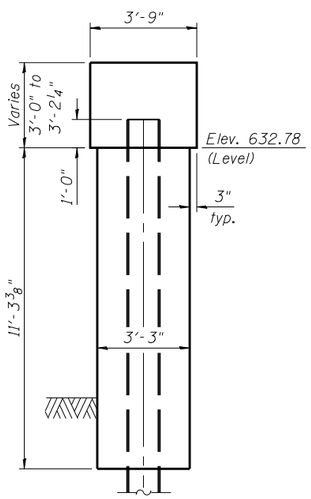

END VIEW

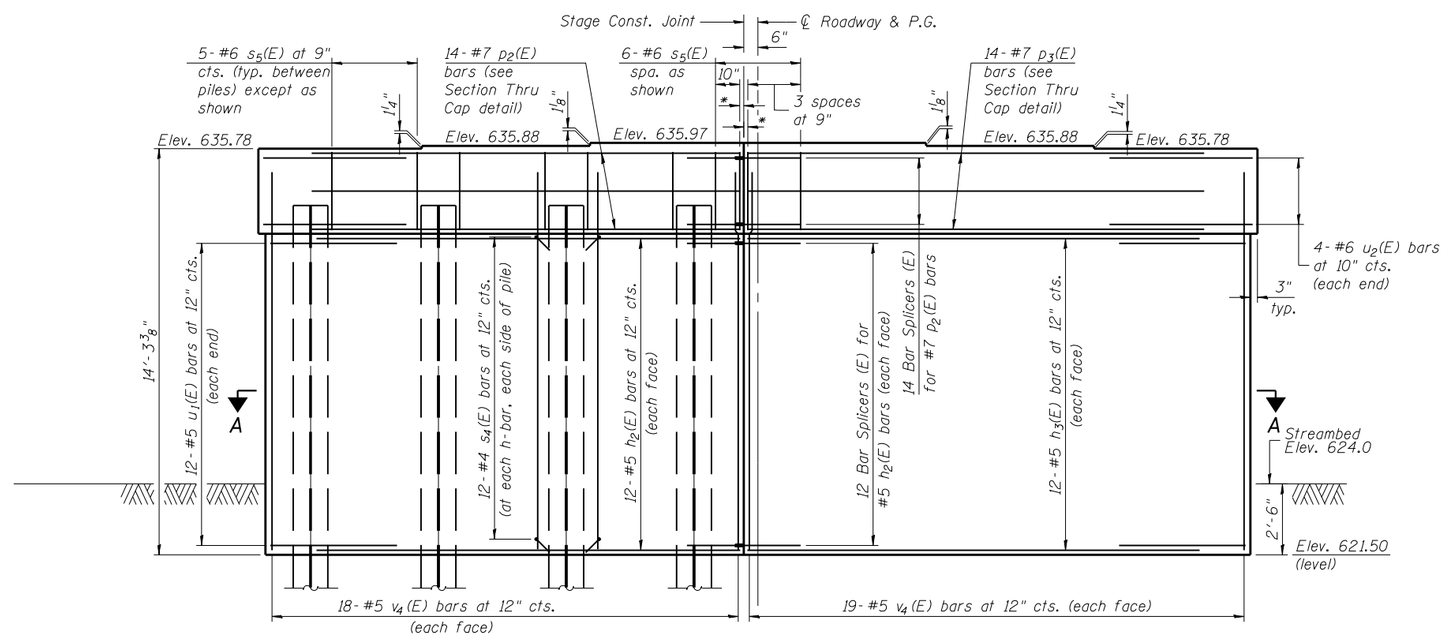

ELEVATION
(Looking East)

* 2" cl.

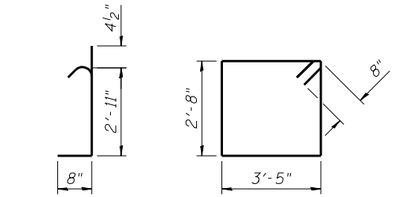

BAR s_4(E) BAR s_5(E)

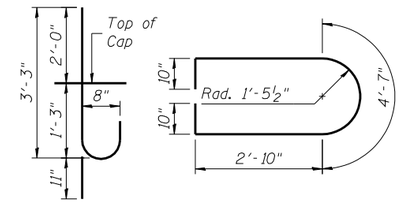

BAR v_3(E) BAR u_1(E)

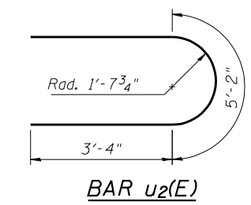

BAR u_2(E)

BILL OF MATERIAL

Bar	No.	Size	Length	Shape
h_2(E)	24	#5	15'-1"	
h_3(E)	24	#5	16'-1"	
p_2(E)	14	#7	15'-1"	
p_3(E)	14	#7	16'-1"	
s_4(E)	192	#4	4'-0"	
s_5(E)	36	#6	13'-6"	
u_1(E)	24	#5	11'-11"	
u_2(E)	8	#6	11'-10"	
v_3(E)	32	#8	4'-2"	
v_4(E)	74	#5	13'-4"	
Structure Excavation		Cu. Yd.	100	
Concrete Structures		Cu. Yd.	61.0	
Reinforcement Bars, Epoxy Coated		Pound	4740	
Furnishing Steel Piles, HP14x89		Foot	469	
Driving Piles		Foot	469	
Test Pile, Steel HP14x89		Each	1	

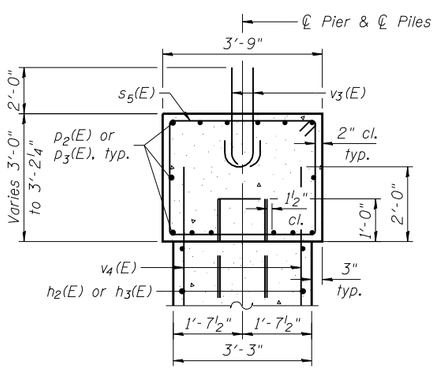

SECTION THRU CAP

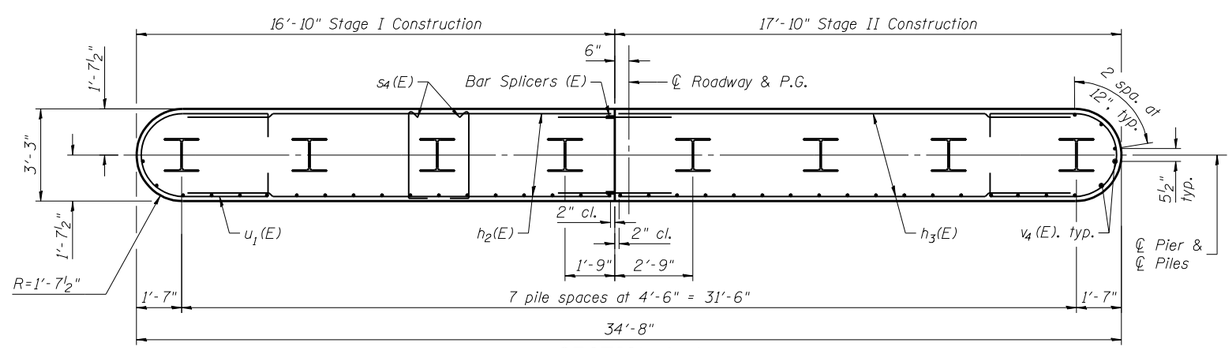

SECTION A-A