Notes:
Space reinforcement in cap to miss anchor bolts.
Pour steps monolithically with cap.
For details of piles, see sheet 106 of 113.

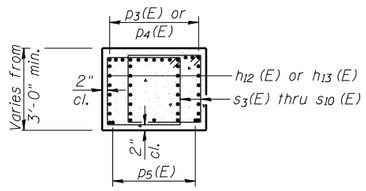

SECTION A-A

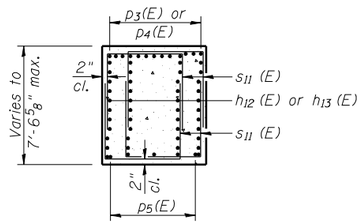

SECTION B-B

MINIMUM BAR LAP
(Pier)
#5 bar = 3'-3"

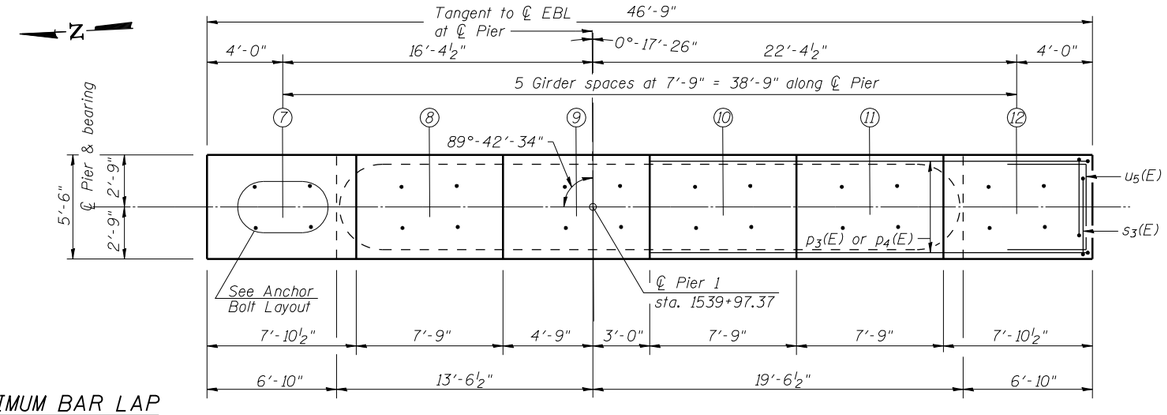

TOP PLAN

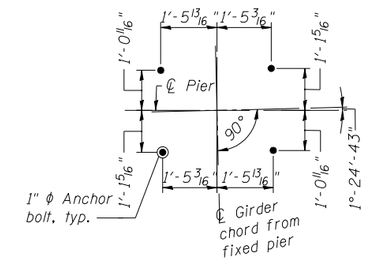

ANCHOR BOLT LAYOUT

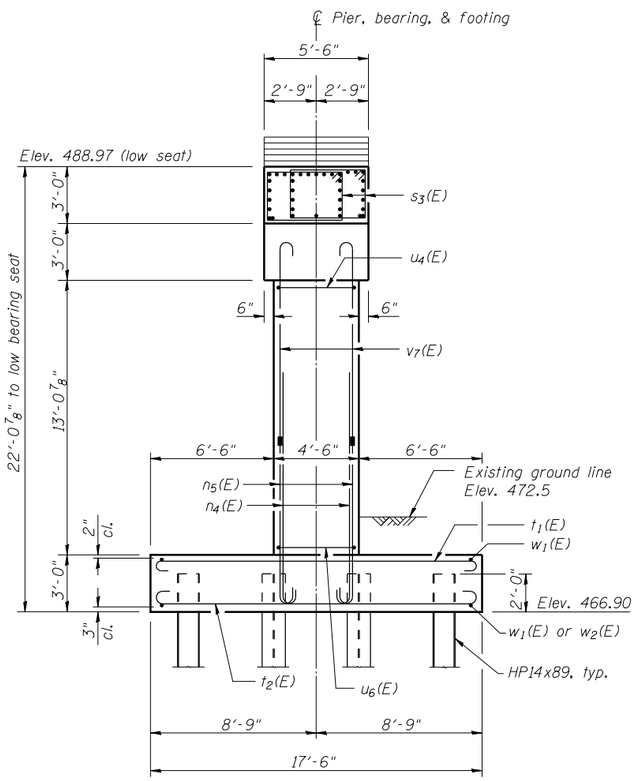

END VIEW

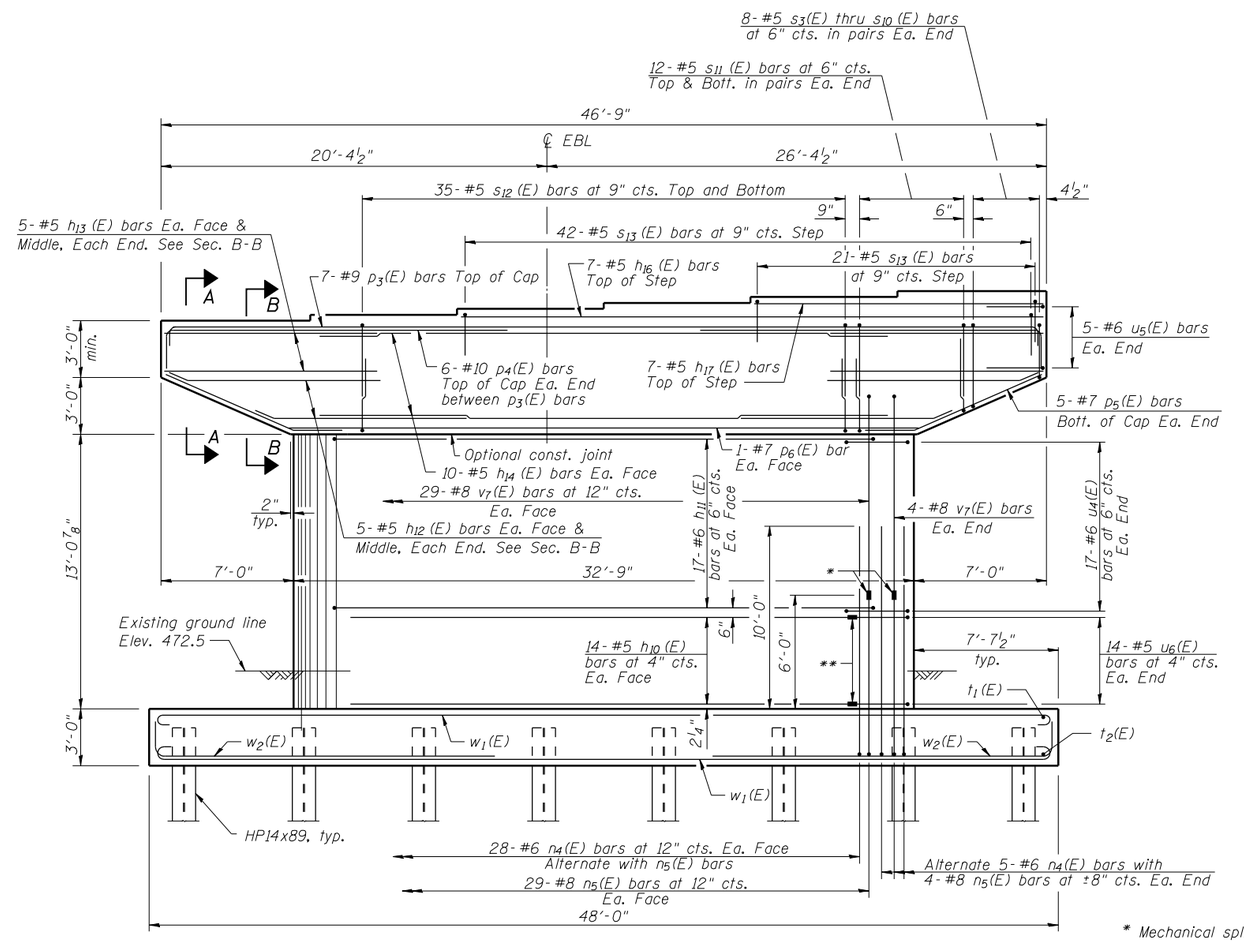

ELEVATION
(Looking East)

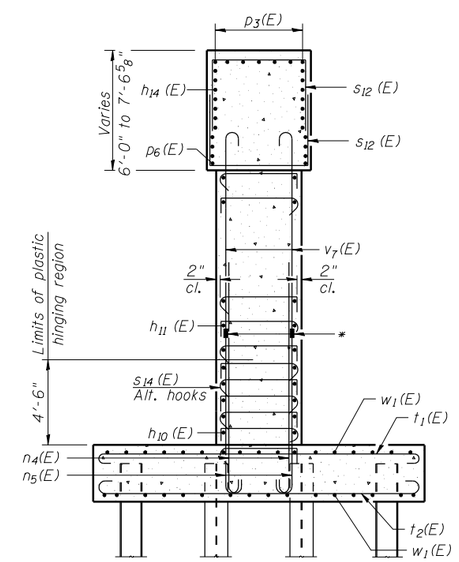

SECTION THRU PIER

* Mechanical splice on vertical bars.

** Mechanical splice or shop welded splice per AWS D1.4 on horizontal bars.

ESCA CONSULTANTS, INC.	USER NAME = has	DESIGNED - RDP	08/13	REVISED -	STATE OF ILLINOIS DEPARTMENT OF TRANSPORTATION
	ESCA PROJECT NO. 1070.09	CHECKED - MTD	08/13	REVISED -	
		DRAWN - DWH	08/13	REVISED -	
	PLOT DATE = 1/28/2014 2:58:49 PM	CHECKED - ELH	01/14	REVISED -	

PIER 1 – EB
STRUCTURE NO. 026-0107
SHEET NO. 95 OF 113 SHEETS

F.A.I. RTE.	SECTION	COUNTY	TOTAL SHEETS	SHEET NO.
70	(26-3B-1, 3B-1(3))BR	FAYETTE	277	175
		CONTRACT NO. 74175		
		ILLINOIS FED. AID PROJECT		