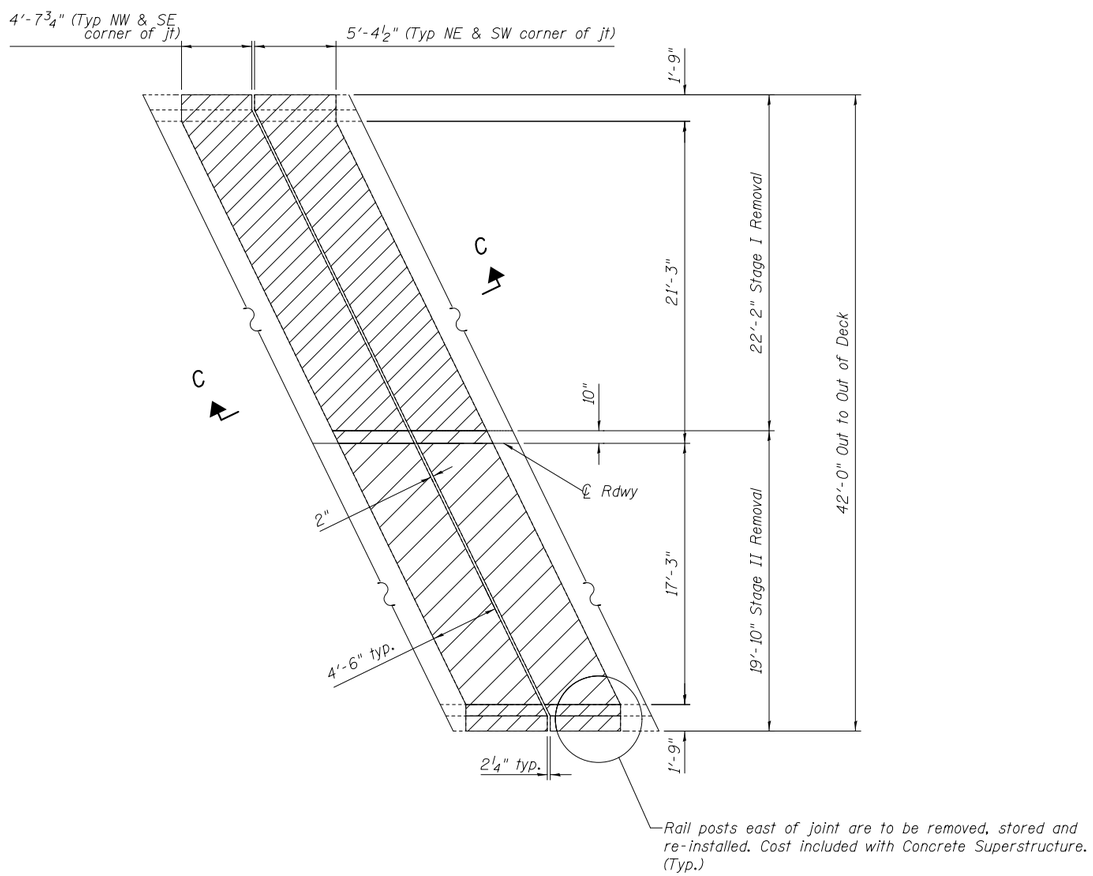

CONCRETE REMOVAL

PIER #5

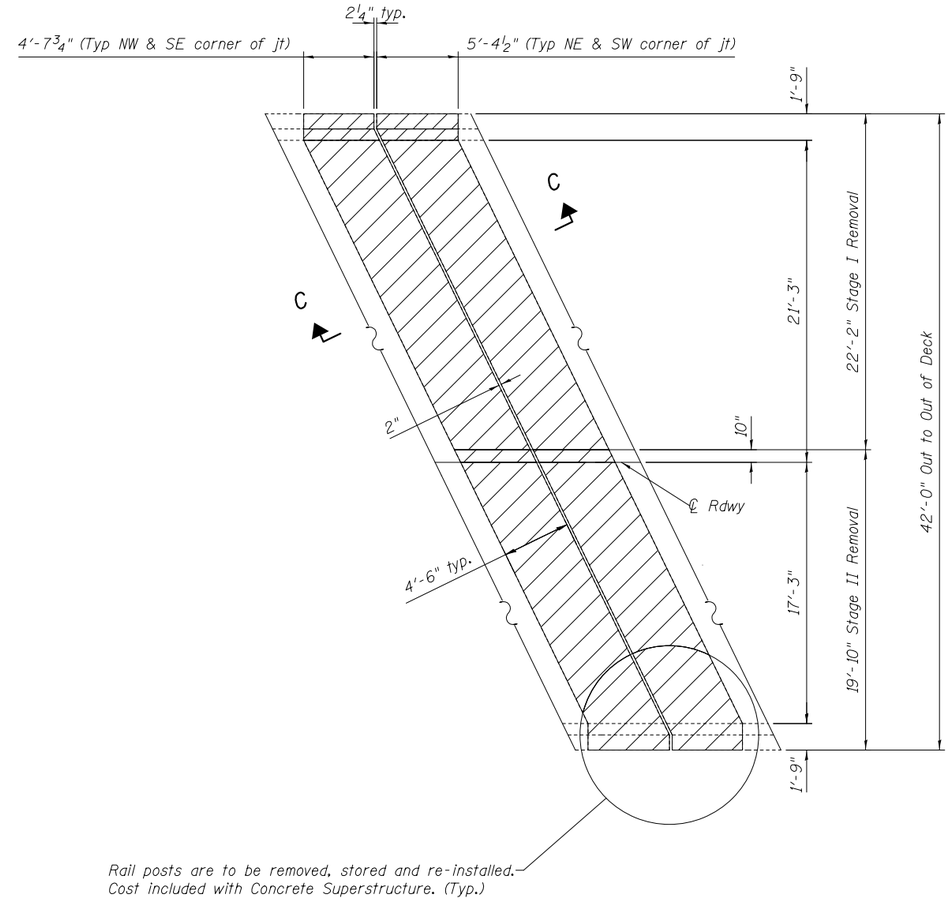

CONCRETE REMOVAL

PIER #10

Note:

See sheet 12 of 22 for Section C-C.

DESIGNED - A.Y.V.	EXAMINED	DATE -	STATE OF ILLINOIS DEPARTMENT OF TRANSPORTATION	JOINT REMOVAL (PIER 5 & 10) SN 014-0058	F.A.P. RTE.	SECTION	COUNTY	TOTAL SHEETS	SHEET NO.
CHECKED -	ENGINEER OF STRUCTURAL SERVICES				327	14-14B-I	CLINTON	27	10
DRAWN - A.Y.V.	PASSED	REVISED					CONTRACT NO. 76G91		
CHECKED -	ENGINEER OF BRIDGES AND STRUCTURES	REVISED		SHEET NO. 5 OF 22 SHEETS		ILLINOIS	FED. AID PROJECT		