ROUTE NO.	SECTION	CITY	TOTAL SHEETS	SHEET NO.
F.A.U. 9719	06-00054 -00-FP	HERRIN	733	727
ILLINOIS		RUSHING DR. CONNECTOR		

CONTRACT NO. 99468

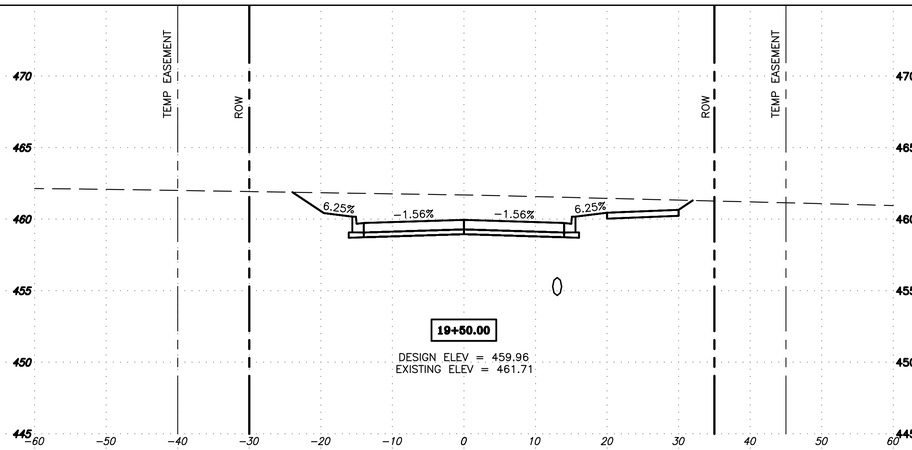

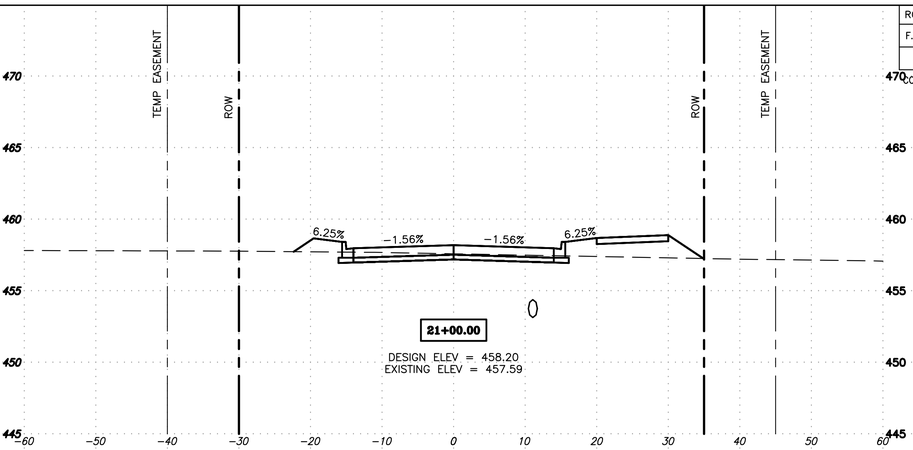

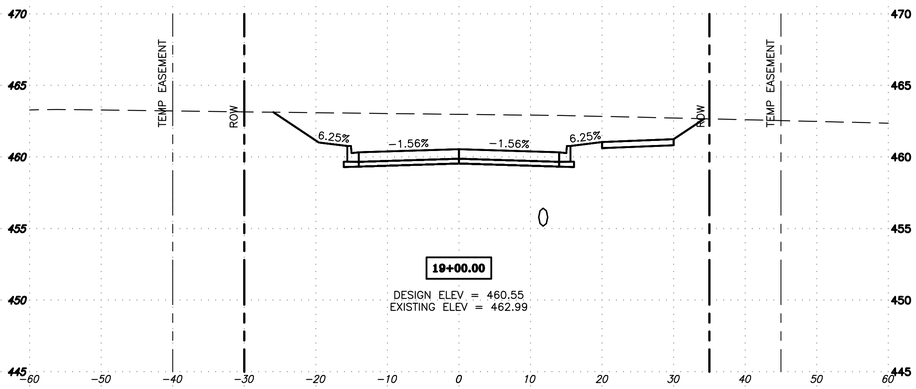

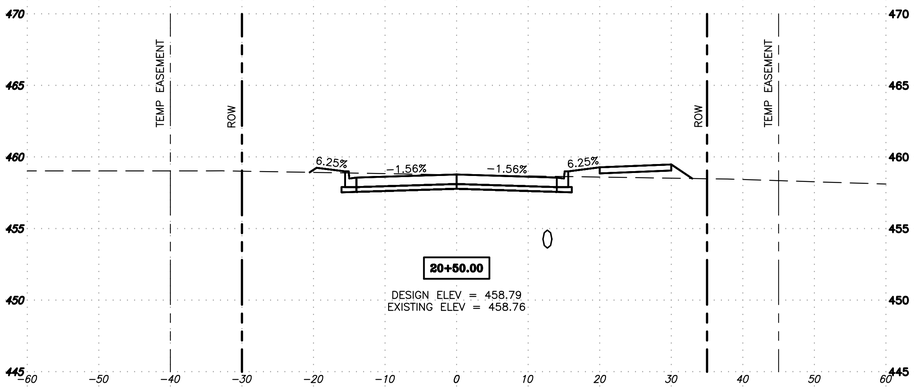

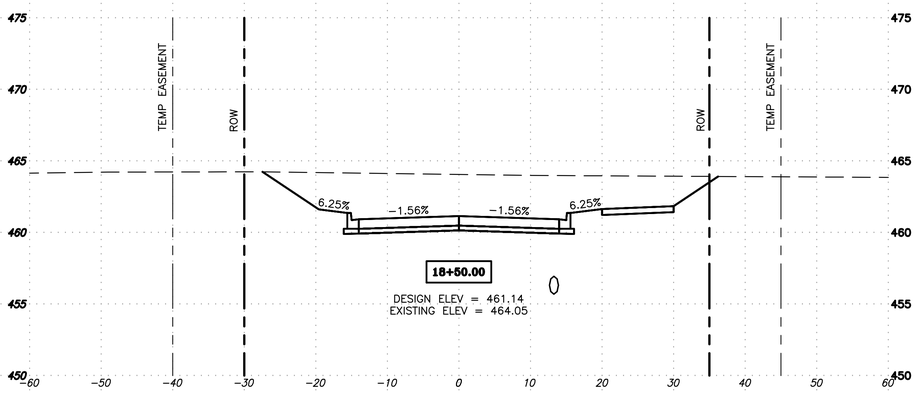

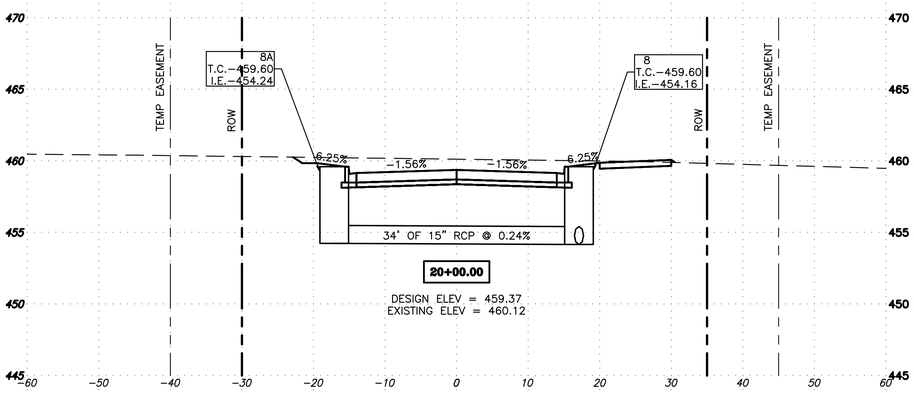

RITTER ROAD – CROSS-SECTIONS – STA 18+50 TO 21+00

PROJECT No. 11120
SHT. 727 OF 733