ROUTE NO.	SECTION	CITY	TOTAL SHEETS	SHEET NO.
F.A.U. 9719	06–00054 –00–FP	HERRIN	733	730
ILLINOIS		RUSHING DR. CONNECTOR		

CONTRACT NO. 99468

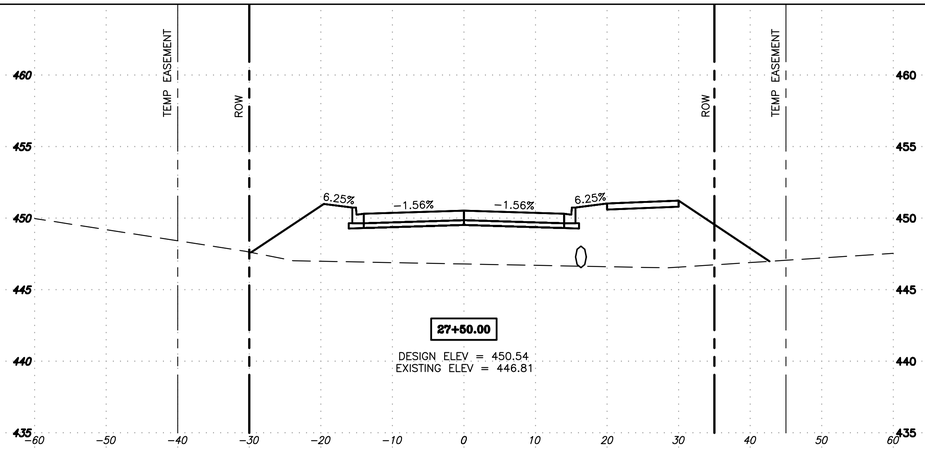

27+50.00

DESIGN ELEV = 450.54
EXISTING ELEV = 446.81

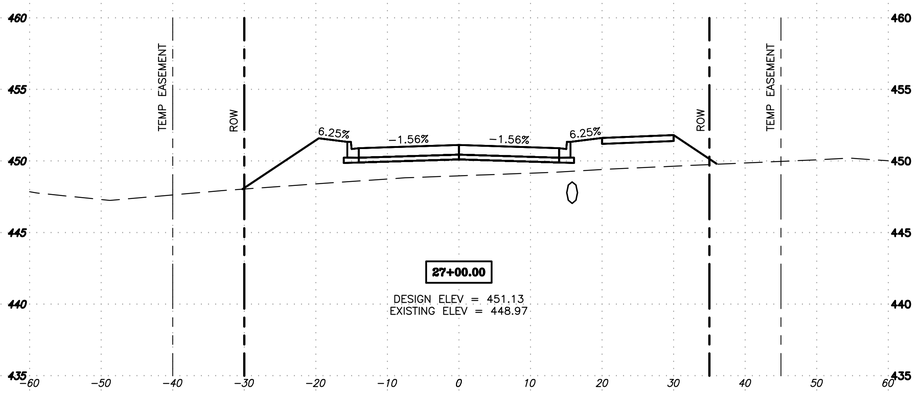

27+00.00

DESIGN ELEV = 451.13
EXISTING ELEV = 448.97

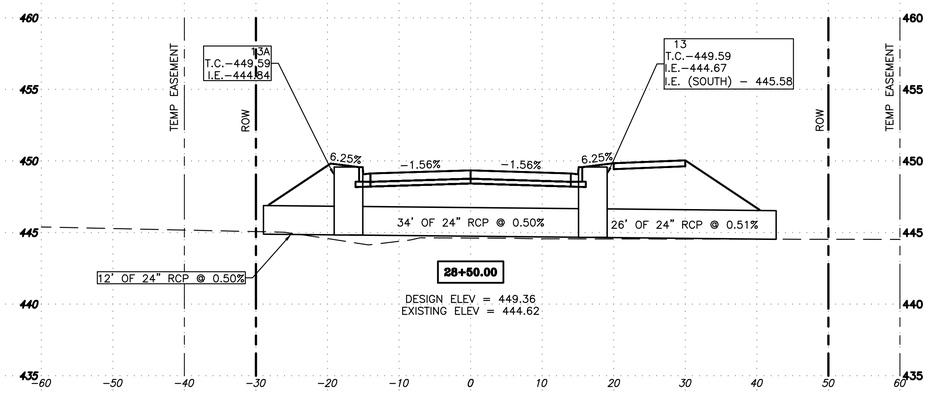

28+50.00

DESIGN ELEV = 449.36
EXISTING ELEV = 444.62

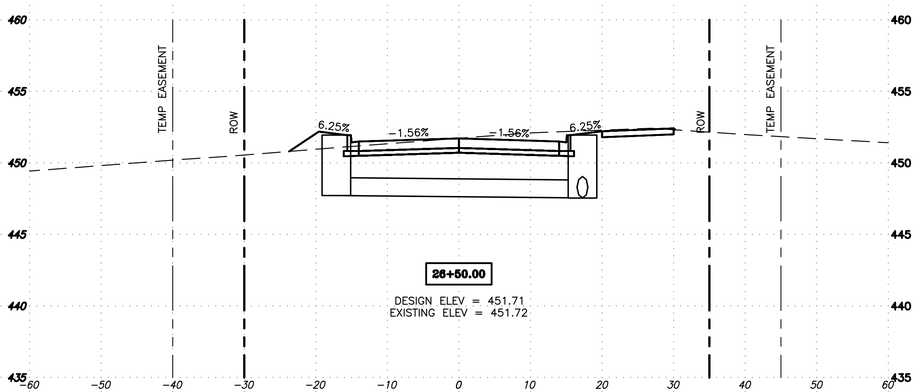

26+50.00

DESIGN ELEV = 451.71
EXISTING ELEV = 451.72

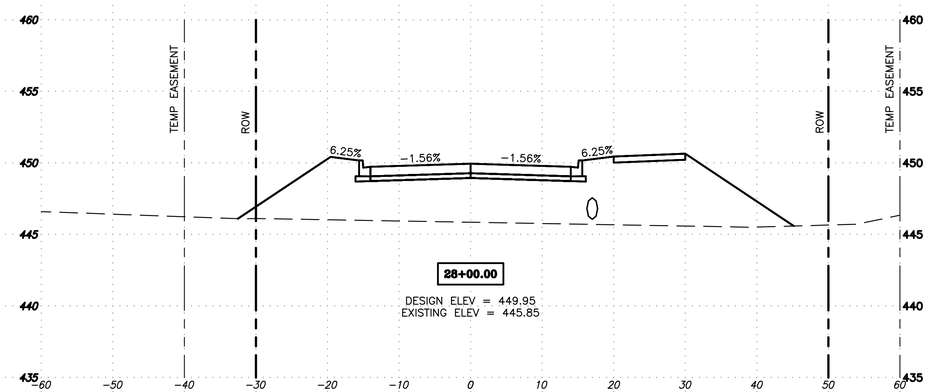

28+00.00

DESIGN ELEV = 449.95
EXISTING ELEV = 445.85

RITTER ROAD – CROSS–SECTIONS – STA 26+50 TO 29+00

PROJECT No. 11120
SHT. 730 OF 733.