ROUTE NO.	SECTION	CITY	TOTAL SHEETS	SHEET NO.
F.A.U. 9719	06-00054 -00-FP	HERRIN	733	733
ILLINOIS		RUSHING DR. CONNECTOR		

CONTRACT NO. 99468

DETAILS OF INLET SPECIAL

N.T.S.

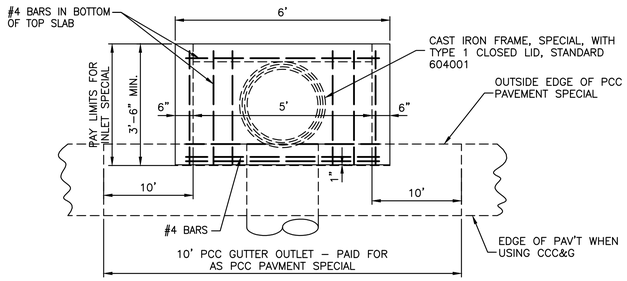

PLAN

PIPE DIAM.	"D"
18" OR LESS	2'-6"
21" & 24"	3'-0"
27" & 30"	3'-7"
33" & 36"	4'-2"
42"	4'-9"
48"	5'-6"
54"	6'-1"

NOTES:

CLASS SI CONCRETE SHALL BE USED THROUGHOUT. SET FACE OF INLET AT THE FACE OF CURB. DEPRESS GUTTER FLOWLINE AT INLET 2 1/2" BELOW NORMAL GUTTER FLOWLINE. CONSTRUCT TRANSITION IN FLOWLINE IN 10 FEET EACH SIDE OF INLET. PIPES SHALL BE CONNECTED TO INLET AS SHOWN ON STORM SEWER LAYOUT.

INLETS WILL BE PAID FOR AT THE CONTRACT UNIT PRICE EACH FOR INLET SPECIAL, WHICH PRICE SHALL INCLUDE THE CAST IRON FRAME, SPECIAL, TYPE 1 WITH TYPE 1 CLOSED LID, THE REINFORCEMENT BARS, METAL STEPS, AND JOINT FILLER.

**THE GALV. IRON STEPS AS DETAILED HEREON ARE TYPICAL. STEPS OF OTHER DESIGN AND MATERIAL THAT WILL CONFORM TO THE MINIMUM REQUIREMENTS OF THE STEPS SHOWN MAY BE USED WHEN APPROVED BY THE ENGINEER.

INLETS SHALL NOT BE PRECAST.

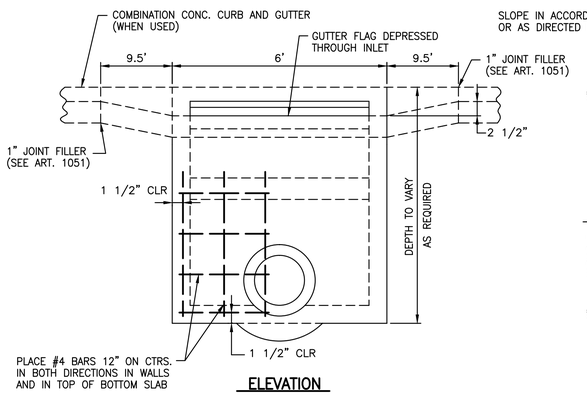

ELEVATION

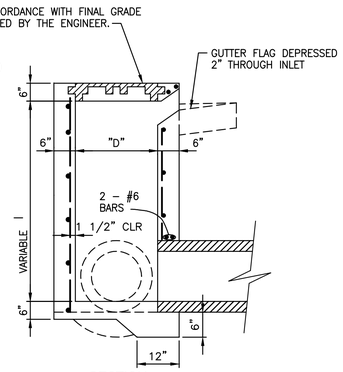

SECTION

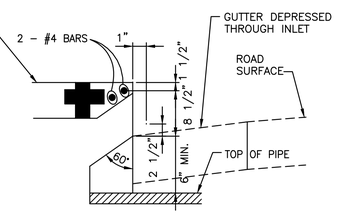

DETAIL AT WEIR

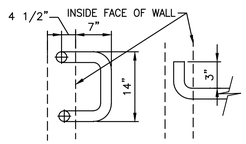

1" ø GALV. IRON STEPS **
SPACED 12" TO 18" C.-C.
USE WHEN INLET IS OVER 4' DEEP

DETAIL OF MANHOLE STEPS

STATE OF ILLINOIS PROFESSIONAL DESIGN FIRM LICENSE NO. 184-004515

REVISIONS	
DATE	NO.

© 2014 ALL RIGHTS RESERVED

CLARIDA & ZIEGLER ENGINEERING CO.
410 North Court St, P.O. Box 937
Marion, Illinois 62959
Phone - (618)993-6411, Fax - (618)993-6750

MISCELLANEOUS DETAILS
RITTER ROAD
HERRIN, ILLINOIS

Date 01/06/2014 | DR. By TW | CK'D By WBZ
Scale AS SHOWN | Job No. 11120 | Sheet No. 733 of 733