Notes:
Pour steps monolithically with cap.
For details of piles see sheet 23 of 29.
For details of Bar Splicers see sheet 24 of 29.
Space reinforcement in cap to miss anchor bolts.
For bar bending details, see sheet 18 of 29.

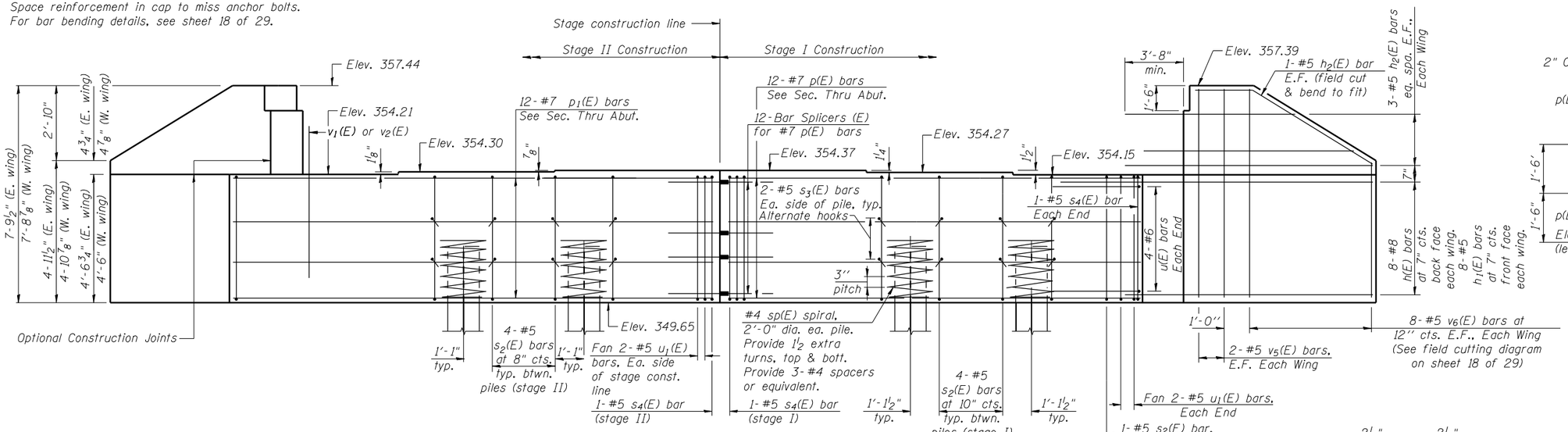

ELEVATION

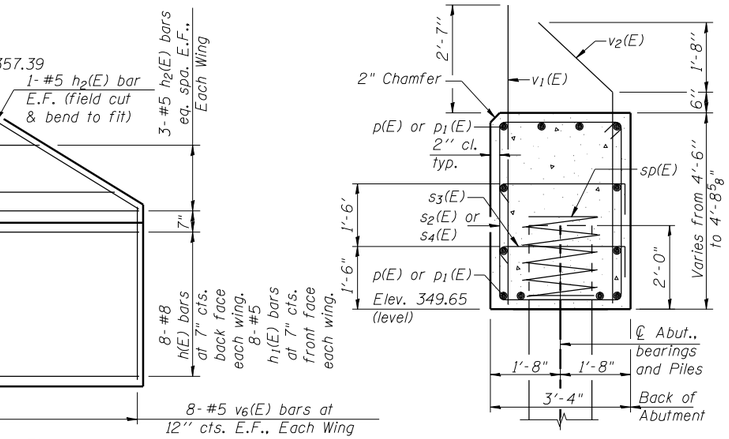

SEC. THRU ABUT.

Dimensions at right angles to abutment.

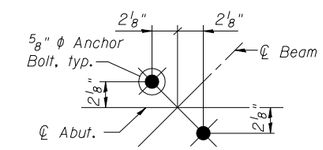

ANCHOR BOLT LAYOUT

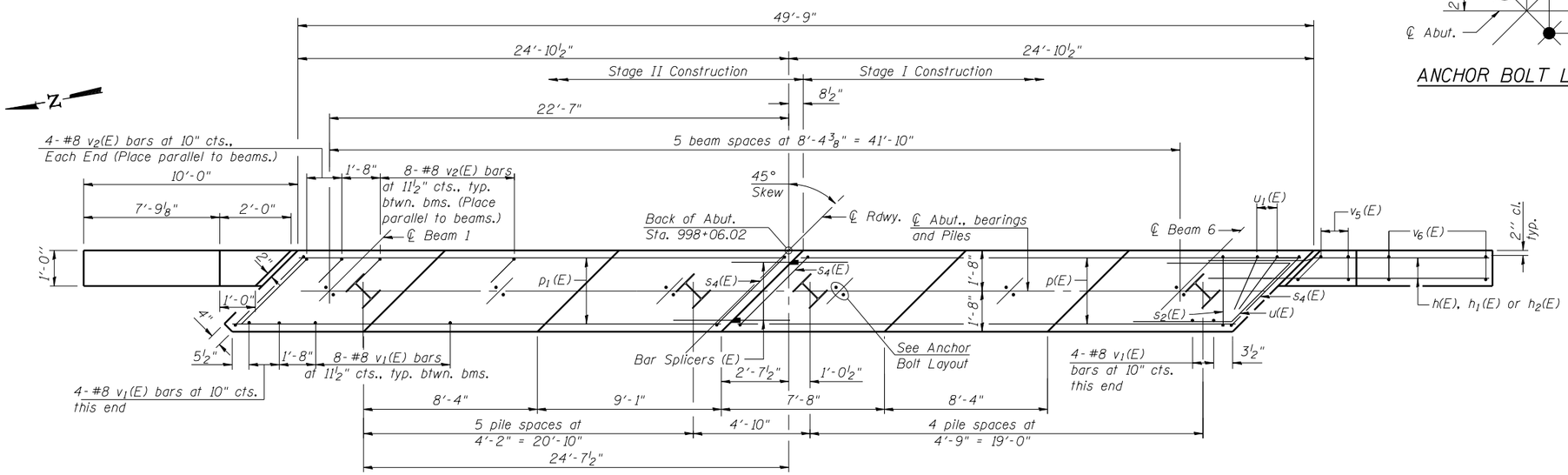

PLAN

BILL OF MATERIAL

	Bar	No.	Size	Length	Shape
	h(E)	16	#8	13'-6"	
	h_1(E)	16	#5	13'-6"	
	h_2(E)	16	#5	13'-8"	
	p(E)	12	#7	23'-8"	
	p_1(E)	12	#7	25'-1"	
	s_2(E)	38	#5	15'-3"	
	s_3(E)	44	#5	4'-0"	
	s_4(E)	4	#5	17'-9"	
*	sp(E)	11	#4	2'-0"	
	u(E)	8	#6	11'-9"	
	u_1(E)	8	#5	9'-2"	
	v_1(E)	48	#8	5'-11"	
	v_2(E)	48	#8	6'-2"	
	v_5(E)	16	#5	7'-5"	
	v_6(E)	32	#5	12'-0"	
	Structure Excavation			Cu. Yd.	186
	Concrete Structures			Cu. Yd.	32.9
	Reinforcement Bars, Epoxy Coated			Pound	5750
	Furnishing Steel Piles HP14x73			Foot	396
	Driving Piles			Foot	396
	Test Pile Steel HP14x73			Each	2

*Length is height of spiral.

PILE DATA

Type: HP14x73
Nominal Required Bearing: 578 kips
Factored Resistance Available: 318 kips
Est. Length: 44 feet
No. Production Piles: 9
No. Test Piles: 2 (1 at each end)