04-25-2025 LETTING ITEM 024

F.A.I. RTE.	SECTION	COUNTY	TOTAL SHEETS	SHEET NO.
94	FAI 94 22 Structure 2	COOK	158	1
	ILLINOIS	CONTRACT NO. 62R62		

* 157 + 1 = 158 TOTAL SHEETS

STATE OF ILLINOIS
DEPARTMENT OF TRANSPORTATION

PROJECT IS LOCATED IN THE VILLAGE OF DOLTON

D–91–158–22

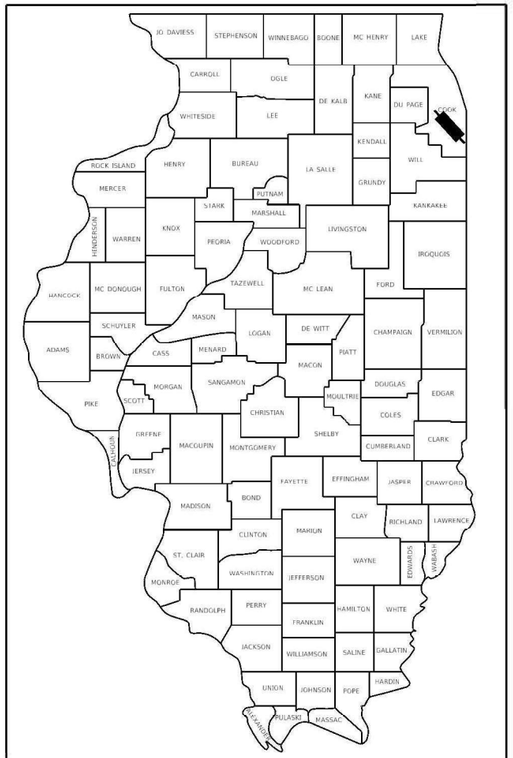

LOCATION OF SECTION INDICATED THUS: –

FOR INDEX OF SHEETS, SEE SHEET NO. 2

PROPOSED
HIGHWAY PLANS

MICHIGAN CITY ROAD OVER I–94 (BISHOP FORD FREEWAY)
F.A.I. RTE. 94 SEC. FAI 94 22 Structure 2
FEDERAL PROJECT NO.: NHPP–GZ34(587)
PROJECT BRIDGE REPLACEMENT, ROADWAY RECONSTRUCTION AND LIGHTING
COOK COUNTY

C–91–205–22

	FAI 94	MICHIGAN CITY ROAD	SB ENTR. RAMP	NB EXIT RAMP
FUNCTIONAL CLASS.:	INTERSTATE	MAJOR COLLECTOR	RAMP	RAMP
DESIGN SPEED:	55 MPH	35 MPH	25 MPH	25 MPH
POSTED SPEED:	55 MPH	35 MPH	25 MPH	25 MPH
ADT:	132,290	13,450	7000	6500
HV %:	10.0%	10.0%	1.2%	2.3%

WORK ON THIS PROJECT WILL CONSIST OF:
BRIDGE REPLACEMENT; ROADWAY RECONSTRUCTION AND RESURFACING, SAFETY IMPROVEMENTS, DRAINAGE IMPROVEMENTS, LIGHTING IMPROVEMENTS, ROADWAY SIGNING, PAVEMENT MARKING, AND LANDSCAPING.

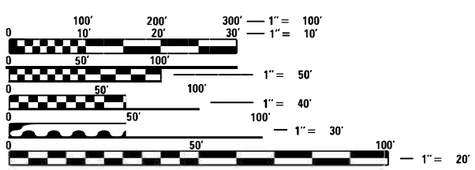

FULL SIZE PLANS HAVE BEEN PREPARED USING STANDARD ENGINEERING SCALES. REDUCED SIZED PLANS WILL NOT CONFORM TO STANDARD SCALES. IN MAKING MEASUREMENTS ON REDUCED PLANS, THE ABOVE SCALES MAY BE USED.

J.U.L.I.E.
JOINT UTILITY LOCATION INFORMATION FOR EXCAVATORS
1–800–892–0123 OR 811

MEADE ELECTRIC CO. DISTRICT ONE ELECTRICAL MAINTENANCE CONTRACTOR LOCATES IDOT ELECTRICAL EQUIPMENT AND UNDERGROUND CABLES 773–287–7672

PROJECT ENGINEER: OMAR ABOALNADIE, P.E.
PROJECT MANAGER: ROBERT STRICKER, P.E.

CONTRACT NO. 62R62

R13E

T36N

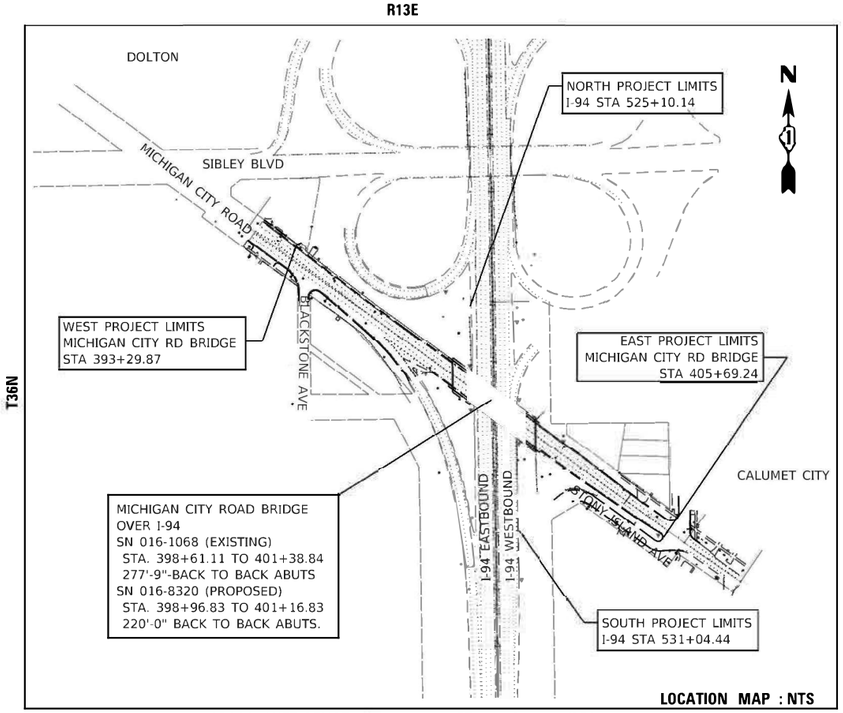

SOUTH HOLLAND TOWNSHIP

LOCATION MAP : NTS

GROSS / NET LENGTH = 1239.37 FT. = 0.235 MILES

STATE OF ILLINOIS
MUHAMMAD ARIF
062-056451
REGISTERED PROFESSIONAL ENGINEER
Muhammad Arif, P.E.
No. 062-056451
Expires: 11/30/2025
Date: 12/13/2024
For Sheets: 1-23, 35-43, 129-155

JACOB W. BAUER
062-064761
LICENSED PROFESSIONAL ENGINEER OF ILLINOIS
Jacob W. Bauer, P.E.
No. 062-064761
Expires: 11/30/2025
Date: 12/13/2024
For Sheets: 24-34

STATE OF ILLINOIS
HAMJA S. MASTER
062-040209
REGISTERED PROFESSIONAL ENGINEER
Hamja S. Master, P.E.
No. 062-040209
Expires: 11/30/2025
Date: 12/13/2024
For Sheets: 44-66

STATE OF ILLINOIS
ROBERT P. CHI
081-003620
CHICAGO IL
LICENSED STRUCTURAL ENGINEER
Robert P. Chi, S.E.
No. 081-003620
Expires: 11/30/2026
Date: 12/13/2024
For Sheets: 67-128

DELTA ENGINEERING GROUP, LLC
CONSULTING ENGINEERS, CONSTRUCTION MANAGERS, SURVEYORS
111 W JACKSON BLVD, SUITE 910
CHICAGO, IL 60604
T 312.377.7700, F 312.427.6145

V3 Companies
7325 Janes Avenue
Woodridge, IL 60517
630.724.9200 Phone
630.724.9202 fax
www.v3co.com

STATE OF ILLINOIS
DEPARTMENT OF TRANSPORTATION

SUBMITTED Dec 17 20 24

REGIONAL ENGINEER

March 21 20 25

ENGINEER OF DESIGN AND ENVIRONMENT

March 21 20 25

DIRECTOR OF HIGHWAYS PROJECT IMPLEMENTATION

PRINTED BY THE AUTHORITY OF THE STATE OF ILLINOIS

REV-SEP

INDEX OF SHEETS:

IDOT DISTRICT 1 STANDARDS

IDOT HIGHWAY STANDARDS:

COMMITMENTS

IDOT HAS RECENTLY ADOPTED THE CHICAGO METROPOLITAN AGENCY FOR PLANNING'S (CMAP) COMMUNITY COHORT METHODOLOGY TO ENSURE THAT THE DEPARTMENT'S COMMITMENT TO EQUITABLE PROJECT SELECTION AND FUNDING DECISIONS ARE FULFILLED.

GENERAL NOTES:

1. ALL CONSTRUCTION SHALL BE DONE IN ACCORDANCE WITH THE "STANDARD SPECIFICATIONS FOR ROAD AND BRIDGE CONSTRUCTION", ADOPTED JANUARY 1, 2022; THE "SUPPLEMENTAL SPECIFICATIONS AND RECURRING SPECIAL PROVISIONS", ADOPTED JANUARY 1, 2025; THE LATEST EDITION OF THE "ILLINOIS MANUAL ON UNIFORM TRAFFIC CONTROL DEVICES FOR STREETS AND HIGHWAYS" (IMUTCD); THE "STANDARD SPECIFICATIONS FOR TRAFFIC CONTROL ITEMS" (SSTCI); THE DETAILS IN THE PLANS AND THE "SPECIAL PROVISIONS" INCLUDED IN THE CONTRACT DOCUMENTS.

2. THE CONTRACTOR SHALL BE MADE AWARE THAT ALL CONSTRUCTION VEHICLES SHALL BE LIMITED TO 15 FEET ABOVE EXISTING GRADE WHILE CROSSING UNDER COMMONWEALTH EDISON'S TRANSMISSION LINES.

3. THE CONTRACTOR SHALL MAINTAIN ALL ROADWAYS OPEN TO TRAFFIC AS SHOWN ON THE MAINTENANCE OF TRAFFIC PLANS.

4. PRIOR TO STARTING ANY EXCAVATION OR ANY OTHER CONSTRUCTION ACTIVITIES, THE CONTRACTOR SHALL CALL J.U.L.I.E. AT (800) 892-0123 FOR FIELD LOCATIONS OF BURIED ELECTRIC, TELEPHONE, CABLE, AND GAS FACILITIES (48 HOURS NOTIFICATION IS REQUIRED). CONTACT THE APPLICABLE MUNICIPALITY FOR SEWER AND WATER LOCATIONS.

   IT SHALL BE THE CONTRACTOR'S RESPONSIBILITY TO NOTIFY IDOT AND/OR APPLICABLE MUNICIPALITY AT LEAST 10 DAYS IN ADVANCE OF ANY CONSTRUCTION NEAR IDOT OR MUNICIPALITY OWNED ELECTRICAL, COMMUNICATIONS, OR TRAFFIC CONTROL CABLES. IDOT AND/OR APPLICABLE MUNICIPALITY ELECTRICIANS WILL LOCATE ANY POSSIBLE INTERFERING CABLES.

   NOTE: IDOT FACILITIES ARE NOT LOCATED BY JULIE OR DIGGER. IDOT ELECTRICAL FACILITIES INCLUDING ROADWAY LIGHTING, FIBER OPTIC, ITS EQUIPMENT, TRAFFIC SIGNAL AND PUMP STATION FACILITIES ARE LOCATED BY THE DEPARTMENT'S ELECTRICAL MAINTENANCE CONTRACTOR. AS OF THE LETTING DATE, CONTACT THE MEADE ELECTRIC COMPANY AT 773-287-7672.

   IF THE CONTRACTOR CUTS OR DAMAGES ANY CABLES, EITHER THROUGH CARELESSNESS OR FAILURE TO FOLLOW THE ABOVE PROCEDURE, HE SHALL THEN BE HELD RESPONSIBLE FOR THE REPAIRING OF ALL DAMAGES AT HIS EXPENSE, TO THE SATISFACTION OF THE AGENCY.

5. ANY ITEM NOT CALLED FOR REMOVAL AND DAMAGED BY THE CONTRACTOR DURING CONSTRUCTION WILL BE REPLACED BY THE CONTRACTOR AT HIS EXPENSE.

6. NIGHT OPERATIONS: IF CONTRACTOR ELECTS TO UTILIZE ARTIFICIAL LIGHTING IN NIGHT OPERATIONS, HE SHALL EXERCISE THE UTMOST PRECAUTION IN PREVENTING ADVERSE VISIBILITY TO THE MOTORING PUBLIC AS WELL AS THE ADJOINING RESIDENTIAL AREAS.

7. TWO WEEKS PRIOR TO PLACEMENT OF PERMANENT PAVEMENT MARKINGS ON IDOT ARTERIAL ROADS, THE ENGINEER SHALL CONTACT PATRICE HARRIS, AREA TRAFFIC FIELD TECHNICIAN AT PATRICE.HARRIS@ILLINOIS.GOV

8. ALL HORIZONTAL COORDINATES AND VERTICAL ELEVATIONS REFER TO NAD83 (CORS) ILLINOIS EAST ZONE HORIZONTAL DATUM AND NAVD88 VERTICAL DATUM, RESPECTIVELY.

9. 10 FT TRANSITIONS SHALL BE USED TO MATCH PROPOSED ITEMS OF WORK TO EXISTING ITEMS IN THE FIELD, UNLESS OTHERWISE SHOWN. THE TRANSITIONS SHALL BE PAID FOR AT THE CONTRACT UNIT PRICE FOR THE PROPOSED ITEM OF WORK SPECIFIED.

10. THE SCALE SHOWN ON THE DRAWINGS APPLIES ONLY TO FULL SIZE PLANS AND NOT TO THE REDUCED SIZE PLANS.

11. DIMENSIONS: IT SHALL BE THE CONTRACTOR'S RESPONSIBILITY TO VERIFY ALL DIMENSIONS AND CONDITIONS EXISTING IN THE FIELD PRIOR TO ORDERING MATERIALS AND BEGINNING CONSTRUCTION.

12. THE LOCATIONS OF EXISTING DRAINAGE STRUCTURES AND STORM LINES ARE APPROXIMATE, AND THE PLANS DO NOT GUARANTEE THEIR ACCURACY, THEIR EXACT HORIZONTAL AND VERTICAL LOCATIONS ARE TO BE DETERMINED IN THE FIELD BY THE CONTRACTOR AT HIS OWN EXPENSE.

13. THE CONTRACTOR SHALL BE RESPONSIBLE FOR THE PROTECTION OF ALL UNDERGROUND OR SURFACE UTILITIES EVEN THOUGH THEY MAY NOT BE SHOWN ON THE PLANS. ANY UTILITY THAT IS DAMAGED DURING CONSTRUCTION SHALL BE REPAIRED OR REPLACED TO THE SATISFACTION OF THE ENGINEER. THIS WORK SHALL BE AT THE CONTRACTOR'S EXPENSE.

14. ANY EXISTING OR PROPOSED STORM SEWER DAMAGED BY THE CONTRACTOR DURING CONSTRUCTION SHALL BE REPLACED TO THE SATISFACTION OF THE ENGINEER AT THE CONTRACTOR'S EXPENSE.

15. THE CONTRACTOR SHALL NOT OPEN OR SHUT ANY WATER VALVES OR FIRE HYDRANTS WITHOUT PRIOR WRITTEN AUTHORIZATION FROM THE OWNING MUNICIPALITY. UNAUTHORIZED USE IS SUBJECT TO ARREST AND PROSECUTION.

16. THE CONTRACTOR TO CONTACT THE ROADSIDE DEVELOPMENT UNIT AT (847) 705-4171 AT LEAST 2 WEEKS PRIOR TO FORESTRY WORK TO IDENTIFY AND MARK TREES TO SAVE WITHIN TREE REMOVAL AREAS.

17. THE CONTRACTOR SHALL CONTACT THE ARTERIAL TRAFFIC CONTROL SUPERVISOR KALPANA KANNAN-HOSADURGA AT KALPANA.KANNAN-HORSADURGA@ILLINOIS.GOV A MINIMUM OF 72 HOURS IN ADVANCE OF BEGINNING WORK.

18. THE CONTRACTOR SHALL USE CARE IN GRADING OR EXCAVATING NEAR ANY AND ALL EXISTING ITEMS THAT WILL NOT BE REMOVED. ANY DAMAGE DONE TO EXISTING ITEMS BY THE CONTRACTOR SHALL BE REPAIRED OR REPLACED TO THE SATISFICATION OF THE ENGINEER AT THE CONTRACTORS OWN EXPENSE.

19. ANY ABANDONED UTILITY OR SEWER ENCOUNTERED DURING CONSTRUCTION OR ANY EXISTING UTILITY OR SEWER ABANDONED AS PART OF THE CONSTRUCTION THAT IS NOT BEING FILLED WITH C.L.S.M., AS PER PLAN, SHALL BE PLUGGED AS DIRECTED BY THE ENGINEER AND ABANDONED IN PLACE. THIS WORK SHALL BE INCLUDED IN THE COST OF THE CONTRACT.

20. ALL ESC MEASURES WILL BE MAINTAINED IN ACCORDANCE WITH THE IDOT EROSION AND SEDIMENT CONTROL FIELD GUIDE FOR CONSTRUCTION INSPECTION FOUND ON THE CONSTRUCTION TAB AT: https://idot.illinois.gov/content/dam/soi/en/web/idot/documents/transportation-system/manuals-guides-and-handbooks/highways/environment/erosion-and-sediment-control-field-guide-for-construction-inspection.pdf

21. THE CONTRACTOR SHALL MAINTAIN THE SURFACE DRAINAGE OF ALL ROADWAYS DURING CONSTRUCTION OF THIS PROJECT. WHEN EXISTING DRAINAGE FACILITIES ARE DISTURBED, THE CONTRACTOR SHALL PROVIDE AND MAINTAIN TEMPORARY OUTLETS AND CONNECTIONS FOR ALL PRIVATE OR PUBLIC DRAINS, SEWERS, AND CATCH BASINS. HE SHALL PROVIDE FACILITIES TO TAKE IN ALL STORM WATER WHICH WILL BE RECEIVED BY THESE DRAINS AND SEWERS AND DISCHARGE THE SAME. HE SHALL PROVIDE AND MAINTAIN A PUMPING PLANT, IF NECESSARY, AND A TEMPORARY OUTLET AND BE PREPARED AT ALL TIMES TO DISPOSE OF THE WATER RECEIVED FROM THESE TEMPORARY CONNECTIONS UNTIL SUCH TIME AS THE PERMANENT CONNECTIONS WITH SEWERS ARE BUILT AND IN SERVICE. THIS WORK SHALL BE INCLUDED IN THE COST OF THE CONTRACT.

22. FENCE: EXISTING FENCE THAT HAS TO BE DISCONNECTED AND/OR REMOVED FOR THE CONTRACTOR'S OPERATION SHALL BE RECONNECTED AND/OR REPLACED BY THE CONTRACTOR IN KIND AT NO ADDITIONAL COST TO IDOT. TEMPORARY FENCE SHOULD BE INSTALLED IF EXISTING FENCE IS REMOVED BY THE CONTRACTOR IN ACCORDANCE WITH SECTION 664 OF THE STANDARD SPECIFICATIONS. ANY RIGHT-OF-WAY MARKERS DISTURBED BY THE CONTRACTOR'S OPERATION SHALL BE REESTABLISHED BY A REGISTERED LAND SURVEYOR AT THE CONTRACTOR'S EXPENSE.

23. THE CONTRACTOR SHALL TAKE ALL NECESSARY SAFETY PRECAUTIONS TO PROTECT AND PROVIDE ACCESS TO ABUTTING PROPERTY, UTILITIES, PEDESTRIANS, AND VEHICULAR TRAFFIC.

24. NO PAYMENT WILL BE MADE FOR RESTORATION BEYOND THE LIMITS SHOWN ON THE PLANS.

25. ANY EXISTING UTILITY ADJUSTMENT AGREEMENTS AND SCHEDULES FOR THE ADJUSTMENT OF UTILITIES, WHICH MAY AFFECT THE WORK, WILL BE MADE AVAILABLE TO THE BIDDERS UPON REQUEST.

26. THE CONTRACTOR SHALL BE RESPONSIBLE FOR PROTECTING AND PRESERVING THE PROJECT'S SURVEY CONTROL POINTS AND BENCHMARKS. RELOCATING AND REPLACING CONTROL POINTS AND BENCHMARKS SHALL BE THE CONTRACTORS RESPONSIBILITY AT HIS OWN EXPENSE.

27. ALL TRENCHES AND OPENINGS MADE IN THE ROADWAY SHALL BE BACKFILLED AND ADEQUATELY COMPACTED IN ACCORDANCE WITH METHOD I SPECIFIED IN ARTICLE 550.07 OF THE STATE STANDARD SPECIFICATIONS.

28. EXISTING DRAINAGE STRUCTURES, EXISTING STORM SEWERS AND EXISTING FLARED END SECTIONS TO REMAIN SHALL BE RECONNECTED WITH THE DRAINAGE SYSTEM. THIS WORK SHALL BE INCLUDED IN THE COST OF DRAINAGE STRUCTURES OR STORM SEWERS, OF THE TYPE AND SIZE SPECIFIED.

29. ALL VEHICLES INCLUDING PASSENGER CARS, WHETHER OWNED BY THE CONTRACTOR OR ANYONE REPRESENTING HIM, SHALL BE EQUIPPED WITH A YELLOW FLASHING LIGHT MOUNTED EITHER ON TOP OR IN THE REAR WINDOW OF THE VEHICLE AND VISIBLE FOR AT LEAST 500 FEET TO THE REAR OF THE VEHICLE, AND A SIGN MUST BE DISPLAYED ON EACH SIDE OF THE VEHICLE AND WITH LETTERS AT LEAST 3 INCHES IN HEIGHT AND WITH A SUITABLE STROKE, SHOWING THE COMPANY NAME AND ADDRESS. MAGNETIC OR TEMPORARY SIGNS ARE ACCEPTABLE.

30. FLOURESCENT VEST AND HARD HATS: ALL CONSTRUCTION PERSONNEL WILL BE REQUIRED TO WEAR ANSI CLASS II FLOURESCENT ORANGE, FLOURESCENT YELLOW/GREEN OR A COMBINATION OF FLOURESCENT ORANGE AND FLOURESCENT YELLOW/GREEN VESTS AND HARD HATS AT ALL TIMES WHILE ON THE CONSTRUCTION SITE.

31. AT THE TIME OF THE PRECONSTRUCTION CONFERENCE, THE CONTRACTOR SHALL SUBMIT FOR APPROVAL, THE PROPOSED CONCRETE TRUCK WASH OUT LOCATIONS. RUNOFF FROM WASH AREAS SHALL BE CONTAINED IN THE DESIGNATED AREAS SO THAT RUNOFF DOES NOT REACH THE STORM SEWER OR DITCH SYSTEMS.

32. POLLUTION CONTROL: THE CONTRACTOR WILL BE REQUIRED TO COMPLY WITH ALL FEDERAL AND STATE REGULATIONS REGARDING AIR, WATER, AND NOISE POLLUTION. HE WILL NOT BE ALLOWED TO BUILD FIRES IN THE SITE.

33. DURING CONSTRUCTION OPERATIONS THE CONTRACTOR SHALL TAKE NECESSARY PRECAUTIONS TO PROTECT ADJACENT TRAVEL LANES FROM DEBRIS BLOWN OR OTHERWISE REMOVED FROM THE CONSTRUCTION AREAS. THE CONTRACTOR SHALL ALSO BE RESPONSIBLE FOR KEEPING DEBRIS OFF THE TRAVELED LANE SURFACES. THIS WORK SHALL BE INCIDENTAL TO THE CONTRACT.

34. THE CONTRACTOR IS RESPONSIBLE FOR COORDINATING HIS CONSTRUCTION OPERATIONS WITH CONSTRUCTION AND MAINTENANCE OPERATIONS, INCLUDING UTILITY RELOCATIONS AND ADJUSTMENTS, OF OTHER CONTRACTORS WORKING WITHIN THE LIMITS OF THE PROJECTS AND ADJACENT TO THE PROJECT.

35. THE CONTRACTOR'S OPERATIONS AND TEMPORARY STORAGE ACTIVITIES SHALL BE LIMITED TO THE WORK AREA AND/OR CONSTRUCTION LIMITS. ANY ADDITIONAL STAGING AREAS ADJACENT TO THE PROJECT ARE SUBJECT TO THE APPROVAL BY THE APPROPRIATE AGENCY.

36. NO ADDITIONAL COMPENSATION WILL BE ALLOWED TO THE CONTRACTOR FOR COMPLIANCE WITH THE ABOVE REQUIREMENTS. THE CONTRACTOR MUST GET ADVANCED APPROVAL FOR A STAGING AREA WITH ACCESS LOCATIONS CLEARLY DEFINED.

37. THE CONTRACTOR IS REQUIRED TO OBTAIN ALL NECESSARY PERMITS AND WRITTEN AUTHORIZATION FROM ALL GOVERNING AGENCIES FOR CONSTRUCTION ABOVE, ADJACENT TO AND ON ROADWAYS UNDER THEIR JURISDICTION.

38. FULL DEPTH SAW CUTS WILL BE REQUIRED FOR ALL REMOVAL ITEMS. SAW CUTTING WILL BE INCLUDED IN THE APPROPRIATE PAY ITEM.

39. THE CONTRACTOR'S PERSONNEL AND EQUIPMENT SHALL ONLY BE PERMITTED TO ENTER AND LEAVE IDOT HIGHWAYS VIA EXISTING RAMPS AND SHALL BE REQUIRED TO MOVE IN THE DIRECTION OF PUBLIC TRAFFIC. ALL MOVEMENTS ON OR ACROSS THE PUBLICLY TRAVELED RIGHT-OF-WAY SHALL BE CONTROLLED BY THE CONTRACTOR SO AS NOT TO ENDANGER PUBLIC TRAFFIC.

40. THE DEPARTMENT HAS NOT OBTAINED ANY PERMITS FOR OFF SITE BORROW, WASTE, USE (BWU) AREAS, PRIOR TO WORKING IN BWU AREAS, IF THE CONTRACTOR CHOOSES TO USE ACTIVITIES REQUIRING PERMITS IT IS THE CONTRACTOR'S RESPONSIBILITY TO SECURE THE PROPER PERMITS. IN ADDITION TO THE BORROW REVIEW (BDE 2289) AND USE/WASTE REVIEW (BDE 2290) SUBMITTALS. THE CONTRACTOR SHALL SUBMIT AN EROSION AND SEDIMENT CONTROL (ESC) PLAN FOR EVERY BWU SITE TO THE DEPARTMENT FOR ACCEPTANCE. GUIDLINES FOR ACCEPTABLE BWU PRACTICES CAN BE FOUND IN SECTION II.G1 AND 2 OF THE SWPPP. THE COST OF ALL MATERIALS AND LABOR NECESSARY TO COMPLY WITH THE ABOVE PROVISIONS TO PREPARE AND IMPLEMENT ESC PLANS WILL NOT BE PAID FOR SEPARATELY, BUT SHALL BE CONSIDERED AS INCLUDED IN THE UNIT BID PRICES OF THE CONTRACT AND NO ADDITIONAL COMPENSATION WILL BE ALLOWED

41. AT ANY TIME WHEN, IN THE JUDGEMENT OF THE ENGINEER, THE CONTRACTOR HAS OBSTRUCTED OR CLOSED A ROAD OR IS CARRYING ON OPERATIONS CAUSING GREATER INTERFERENCE OR INCONVENIENCE THAN NECESSARY FOR THE PROPER PROSECUTION OF THE WORK, THE ENGINEER MAY REQUIRE THE CONTRACTOR TO FINISH THE SECTION OF THE WORK WHICH IS IN PROGRESS BEFORE WORK IS STARTED ON ANY ADDITIONAL SECTION AND, IN ADDITION THERETO, MAY REQUIRE THE CONTRACTOR TO TAKE ANY OTHER ACTIONS WHICH WILL MINIMIZE INCONVENIENCE TO VEHICULAR AND PEDESTRIAN TRAFFIC.

42. UPON COMPLETION OF THE WORK AND BEFORE ACCEPTANCE AND FINAL PAYMENT WILL BE MADE, THE AGENCY RIGHT-OF-WAY, STREAM CHANNELS AND BANKS WITHIN SAID RIGHT-OF-WAY OR AFFECTED BY THE WORK AT DRAINAGE STRUCTURES, BORROW PITS, OTHER STRUCTURES, AND ALL AREAS OCCUPIED BY THE CONTRACTOR IN CONNECTION WITH THE WORK SHALL BE CLEANED OF ALL RUBBISH, EXCESS MATERIALS, FALSE WORK, TEMPORARY PAVING, TEMPORARY STRUCTURES, AND EQUIPMENT. ALL PARTS OF THE WORK SHALL BE LEFT IN NEAT AND PRESENTABLE CONDITION IN ACCORDANCE WITH THIS SUB-SECTION.

43. FOR WORK OUTSIDE THE LIMITS OF BRIDGE APPROACH PAVEMENT, ALL REFERENCES IN THE HIGHWAY STANDARDS AND STANDARD SPECIFICATIONS FOR REINFORCEMENT, DOWEL BARS AND TIE BARS IN PAVEMENT, SHOULDERS, CURB, GUTTER, COMBINATION CURB & GUTTER AND MEDIAN SHALL BE EPOXY COATED, UNLESS NOTED ON THE PLANS.

44. AGGREGATE SUBGRADE IMPROVEMENT (ASI) 12" (30300112) SHALL CONSIST OF A COMBINATION OF A 9" THICK POROUS GRANULAR EMBANKMENT WITH A 3" (MINIMUM) CA-6 AGGREGATE CAP. IN SHOULDER AND GORE AREAS, THE DEPTH OF THE AGGREGATE CAP MAY VARY UP TO 5". THE ADDITIONAL THICKNESS OF THE CAPPING LAYER SHALL BE PAID FOR AS AGGREGATE SUBGRADE IMPROVEMENT 12" (30300112), AND NO ADDITIONAL COMPENSATION WILL BE ALLOWED. THE AGGREGATE GRADATION FOR THE AGGREGATE SUBGRADE IMPROVEMENT 12" LOWER LIFT SHALL BE CS1 OR RR1.

45. GEOTECHNICAL FABRIC FOR GROUND STABILIZATION AND/OR AGGREGATE SUBGRADE IMPROVEMENT (CU YD) HAS BEEN PROVIDED FOR USE AT THE LOCATIONS INDICATED FOR SOILS THAT TEND TO BE UNSTABLE AND/OR UNSUITABLE. THE ACTUAL NEED FOR REMOVAL AND REPLACEMENT WITH ABOVE ITEM WILL BE DETERMINED IN THE FIELD AT THE TIME OF CONSTRUCTION BY THE GEOTECHNICAL ENGINEER. ALL POTENTIALLY UNSTABLE SOILS SHOULD BE TESTED WITH A STATIC OR DYNAMIC CONE PENETROMETER AND TREATED IN ACCORDINACE WITH ARTICLE 301.04 OF THE STANDARD SPECIFICATIONS AND IDOT SUBGRADE STABILITY MANUAL. IF UNSTABLE AND/OR UNSUITABLE SOILS ARE NOT ENCOUNTERED, THEN THE QUANTITY SHALL BE DEDUCTED AND NO ADDITIONAL COMPENSATION WILL BE DUE TO THE CONTRACTOR.

46. ANY AGGREGATE SUBGRADE IMPROVEMENT CONTAMINATED AND/OR DAMAGED BY THE CONTRACTOR'S VEHICLES AND/OR EQUIPMENT IS TO BE REMOVED AND REPLACED AS DIRECTED BY THE ENGINEER AT CONTRACTOR'S EXPENSE.

47. THE SUBGRADE STABILITY SHALL BE VERIFIED BY PROOF ROLLING WITH A FULLY LOADED TANDEM-AXLE TRUCK.

48. ANY AGGREGATE SUBGRADE IMPROVEMENT CONTAMINATED AND/OR DAMAGED BY THE CONTRACTOR'S VEHICLES AND/OR EQUIPMENT IS TO BE REMOVED AND REPLACED AS DIRECTED BY THE ENGINEER AT CONTRACTOR EXPENSE.

49. PIPE UNDERDRAINS SHALL BE INSTALLED ACCORDING TO SECTION 601 OF THE SSRBC AND STANDARD 601001-05. TOP OF PIPE UNDERDRAINS SHALL BE PLACED MINIMUM 6" BELOW THE AGGREGATE SUBGRADE IMPROVEMENT LAYER.

50. UNDERDRAINS CONNECTIONS TO DRAINAGE STRUCTURES SHALL BE INCLUDED IN THE COST OF THE PIPE UNDERDRAINS. THE COST MAKING PIPE BACKFILLING STORM SEWER CONSTRUCTED UNDER THE ROADWAY SPECIFIED UNDER ART. 550.07(b,c) OF THE SSRBC WILL NOT BE ALLOWED

51. PLEASE CONTACT THE ROADSIDE DEVELOPMENT UNIT AT (847) 705-4171 AT LEAST 72 HOURS IN ADVANCE OF BOTH TREE CLEARING WORK AND WEED CONTROL WORK.

52. THE CONTRACTOR SHALL REQUEST AND GAIN APPROVAL FROM THE ILLINOIS DEPARTMENT OF TRANSPORTATION'S EXPRESSWAY TRAFFIC OPERATIONS ENGINEER AT WWW.IDOTLCS.COM TWENTY-FOUR (24) HOURS IN ADVANCE OF ALL DAILY LANE, RAMP AND SHOULDER CLOSURES AND 7 DAYS IN ADVANCE OF ALL PERMANENT AND WEEKEND CLOSURES ON ALL FREEWAY AND/OR EXPRESSWAYS IN DISTRICT ONE. THIS ADVANCE NOTIFICATION IS CALCULATED BASED ON WORKWEEK OF MONDAY THROUGH FRIDAY AND SHALL NOT INCLUDE WEEKENDS OR HOLIDAYS.

53. THE DEPARTMENT HAS NOT OBTAINED ANY PERMITS FOR OFFSITE BORROW, WASTE, USE (BWU) AREAS. PRIOR TO WORKING IN BWU AREAS, IF THE CONTRACTOR CHOOSES TO USE ACTIVITIES REQUIRING PERMITS IT IS THE CONTRACTOR'S RESPONSIBILITY TO SECURE THE PROPER PERMITS. IN ADDITION TO THE BORROW REVIEW (BDE 2289) and USE/WASTE REVIEW (BDE 2290) SUBMITTALS, THE CONTRACTOR SHALL SUBMIT AN EROSION AND SEDIMENT CONTROL (ESC) PLAN FOR EVERY BWU SITE TO THE DEPARTMENT FOR ACCEPTANCE. GUIDELINES FOR ACCEPTABLE BWU PRACTICES CAN BE FOUND IN SECTION II.G.1 AND 2 of the SWPPP.

54. THE COST OF ALL MATERIALS AND LABOR NECESSARY TO COMPLY WITH THE ABOVE PROVISIONS TO PREPARE AND IMPLEMENT ESC PLANS WILL NOT BE PAID FOR SEPARATELY BUT SHALL BE CONSIDERED AS INCLUDED IN THE UNIT BID PRICES OF THE CONTRACT AND NO ADDITIONAL COMPENSATION WILL BE ALLOWED.

55. ALL EXCAVATION, GRADING, AND EMBANKMENT ACTIVITIES FOR THE TEMPORARY RAMP AND INTERSECTION CONSTRUCTION SHALL BE REVERSED AND SITE CONDITIONS RESTORED TO THEIR ORIGINAL STATE FOLLOWING COMPLETION OF THE IMPROVEMENT AND REMOVAL OF THE TEMPORARY PAVEMENTS. EARTHWORK QUANTITIES FOR THE VARIOUS OPERATIONS HAVE BEEN INCLUDED IN THE CONTRACT AND CAN BE FOUND IN THE EARTHWORK TABLE.

56. BEFORE BEGINNING ANY WORK, THE CONTRACTOR SHALL RETAIN AND RECORD, FOR FUTURE REFERENCE, ALL EXISTING PAVEMENT MARKING LINES (AND RAISED REFLECTIVE PAVEMENT MARKERS) IN ORDER THAT THESE LOCATIONS BE RE-ESTABLISHED FOR STRIPING. EXACT LOCATIONS OF ALL PAVEMENT MARKINGS SHALL BE AS DIRECTED BY THE ENGINEER.

CONTACT INFORMATION

IDOT TRAFFIC FIELD TECHNICIAN PATRICE.HARRIS@ILLINOIS.GOV

* = SPECIALTY ITEM

	CODE NO.	ITEM	UNIT	TOTAL QUANTITY	90% FED / 10% STATE		
					0004	0010	0021
					ROADWAY RECONSTR.	BRIDGE REPLACEMENT	HIGHWAY LIGHTING
*	X8210410	HIGH MAST LUMINAIRE COUNTERWEIGHT	EACH	67			67
	20100110	TREE REMOVAL (6 TO 15 UNITS DIAMETER)	UNIT	92	92		
	20100210	TREE REMOVAL (OVER 15 UNITS DIAMETER)	UNIT	40	40		
	20100500	TREE REMOVAL, ACRES	ACRE	1	1		
	20101100	TREE TRUNK PROTECTION	EACH	10	10		
	20101200	TREE ROOT PRUNING	EACH	7	7		
	20101300	TREE PRUNING (1 TO 10 INCH DIAMETER)	EACH	3	3		
	20101350	TREE PRUNING (OVER 10 INCH DIAMETER)	EACH	4	4		
	20200100	EARTH EXCAVATION	CU YD	1005	1005		
	20201200	REMOVAL AND DISPOSAL OF UNSUITABLE MATERIAL	CU YD	206	206		
	20800150	TRENCH BACKFILL	CU YD	33	33		
	21001000	GEOTECHNICAL FABRIC FOR GROUND STABILIZATION	SQ YD	725	725		
	21101615	TOPSOIL FURNISH AND PLACE, 4"	SQ YD	4098	4098		
	25000210	SEEDING, CLASS 2A	ACRE	0.5	0.5		

* = SPECIALTY ITEM

CODE NO.	ITEM	UNIT	TOTAL QUANTITY	90% FED / 10% STATE		
				0004	0010	0021
				ROADWAY RECONSTR.	BRIDGE REPLACEMENT	HIGHWAY LIGHTING
25000312	SEEDING, CLASS 4A	ACRE	0.25	0.25		
25000400	NITROGEN FERTILIZER NUTRIENT	POUND	90	90		
25000600	POTASSIUM FERTILIZER NUTRIENT	POUND	90	90		
25100115	MULCH, METHOD 2	ACRE	0.50	0.50		
25100630	EROSION CONTROL BLANKET	SQ YD	2206	2206		
25200110	SODDING, SALT TOLERANT	SQ YD	1514	1514		
25200200	SUPPLEMENTAL WATERING	UNIT	1921	1921		
28000250	TEMPORARY EROSION CONTROL SEEDING	POUND	35	35		
28000305	TEMPORARY DITCH CHECKS	FOOT	21	21		
28000400	PERIMETER EROSION BARRIER	FOOT	1823	1823		
28000510	INLET FILTERS	EACH	22	22		
28001200	TEMPORARY HEAVY DUTY EROSION CONTROL BLANKET	SQ YD	518	518		
30300001	AGGREGATE SUBGRADE IMPROVEMENT	CU YD	219	219		
30300112	AGGREGATE SUBGRADE IMPROVEMENT 12"	SQ YD	2636	2636		

* = SPECIALTY ITEM

CODE NO.	ITEM	UNIT	TOTAL QUANTITY	90% FED / 10% STATE		
				0004	0010	0021
				ROADWAY RECONSTR.	BRIDGE REPLACEMENT	HIGHWAY LIGHTING
35101582	AGGREGATE BASE COURSE, TYPE B 2"	SQ YD	588	588		
35101600	AGGREGATE BASE COURSE, TYPE B 4"	SQ YD	1527	1527		
35501335	HOT-MIX ASPHALT BASE COURSE, 12 3/4"	SQ YD	356	356		
40600275	BITUMINOUS MATERIALS (PRIME COAT)	POUND	80	80		
40600290	BITUMINOUS MATERIALS (TACK COAT)	POUND	80	80		
4060462	HOT-MIX ASPHALT SURFACE COURSE, IL-9.5, MIX "D", N70	TON	42	42		
42000080	PAVEMENT CONNECTOR (PCC) FOR BRIDGE APPROACH SLAB	SQ YD	352	352		
42000501	PORTLAND CEMENT CONCRETE PAVEMENT 10" (JOINTED)	SQ YD	1623	1623		
42001300	PROTECTIVE COAT	SQ YD	6171	3524	2647	
42300100	PORTLAND CEMENT CONCRETE DRIVEWAY PAVEMENT, 5 INCH	SQ YD	18	18		
42400200	PORTLAND CEMENT CONCRETE SIDEWALK 5 INCH	SQ FT	12462	12462		
42400800	DETECTABLE WARNINGS	SQ FT	60	60		
44000100	PAVEMENT REMOVAL	SQ YD	2150	2150		
44000200	DRIVEWAY PAVEMENT REMOVAL	SQ YD	18	18		

* = SPECIALTY ITEM
* * = NON-PARTICIPATING ITEMS

CODE NO.	ITEM	UNIT	TOTAL QUANTITY	90% FED / 10% STATE		
				0004	0010	0021
				ROADWAY RECONSTR.	BRIDGE REPLACEMENT	HIGHWAY LIGHTING
44000500	COMBINATION CURB AND GUTTER REMOVAL	FOOT	636	636		
44000600	SIDEWALK REMOVAL	SQ FT	1478	1478		
44004250	PAVED SHOULDER REMOVAL	SQ YD	261	261		
44200050	WELDED WIRE REINFORCEMENT	SQ YD	352	352		
44201298	DOWEL BARS 1 1/4"	EACH	98	98		
48101500	AGGREGATE SHOULDERS, TYPE B 6"	SQ YD	816	816		
48300500	PORTLAND CEMENT CONCRETE SHOULDERS 10"	SQ YD	18	18		
50100100	REMOVAL OF EXISTING STRUCTURES	L SUM	1		1	
50157300	PROTECTIVE SHIELD	SQ YD	1074		1074	
50200100	STRUCTURE EXCAVATION	CU YD	483		483	
50200450	REMOVAL OF UNSUITABLE MATERIAL FOR STRUCTURES	SQ YD	314		314	
50300225	CONCRETE STRUCTURES	CU YD	392		392	
50300255	CONCRETE SUPERSTRUCTURE	CU YD	602		602	
50300260	BRIDGE DECK GROOVING	SQ YD	1480		1480	

* = SPECIALTY ITEM

	CODE NO.	ITEM	UNIT	TOTAL QUANTITY	90% FED / 10% STATE		
					0004	0010	0021
					ROADWAY RECONSTR.	BRIDGE REPLACEMENT	HIGHWAY LIGHTING
	50300285	FORMLINER TEXTURED SURFACE	SQ FT	960		960	
	50301350	CONCRETE SUPERSTRUCTURE (APPROACH SLAB)	CU YD	203		203	
	50500105	FURNISHING AND ERECTING STRUCTURAL STEEL	L SUM	1		1	
	50500505	STUD SHEAR CONNECTORS	EACH	5694		5694	
	50800105	REINFORCEMENT BARS	POUND	62690		62690	
	50800205	REINFORCEMENT BARS, EPOXY COATED	POUND	318430		318430	
*	50901720	BICYCLE RAILING	FOOT	210		210	
*	50901735	BICYCLE RAILING,CURVED	FOOT	247		247	
*	50901739	BRIDGE FENCE RAILING, CURVED	FOOT	487		487	
*	50901750	PARAPET RAILING	FOOT	240		240	
*	51200961	FURNISHING METAL SHELL PILES 16" X 0.312"	FOOT	990		990	
*	51202305	DRIVING PILES	FOOT	990		990	
*	51203200	TEST PILE METAL SHELLS	EACH	2		2	
*	51204650	PILE SHOES	EACH	20		20	

MODEL: $MODELNAME$
FILE NAME: G:\LP220720 IDOT D1 PTB 204-001 Michigan City Rd Bridge\03A Design\01 CADD\02 Sheet\Roadway\008-D162R62-sht-SOQ 05.dgn

DELTA ENGINEERING GROUP, LLC
111 W JACKSON BLVD, SUITE 910
CHICAGO, IL 60604
T 312.377.7700, F 312.427 6145

USER NAME = denisb	DESIGNED - MA/DB	REVISED -
	DRAWN - DB	REVISED -
PLOT SCALE = 2.0000 ' / in.	CHECKED - MA	REVISED -
PLOT DATE = 12/20/2024	DATE - 12/13/2024	REVISED -

STATE OF ILLINOIS
DEPARTMENT OF TRANSPORTATION

MICHIGAN CITY ROAD OVER I-94
SUMMARY OF QUANTITIES

SCALE: N/A | SHEET 05 OF 13 SHEETS | STA. N/A | TO STA. N/A

F.A.I. RTE.	SECTION	COUNTY	TOTAL SHEETS	SHEET NO.
94	FAI 94 22 STRUCTURE 2	COOK	157	8
		CONTRACT NO. 62R62		
		ILLINOIS	FED. AID PROJECT	

REV-SEP

* = SPECIALTY ITEM

	CODE NO.	ITEM	UNIT	TOTAL QUANTITY	90% FED / 10% STATE		
					0004	0010	0021
					ROADWAY RECONSTR.	BRIDGE REPLACEMENT	HIGHWAY LIGHTING
*	51500100	NAME PLATES	EACH	2		2	
	51603000	DRILLED SHAFT IN SOIL	CU YD	207		207	
	51604000	DRILLED SHAFT IN ROCK	CU YD	8		8	
	52100010	ELASTOMERIC BEARING ASSEMBLY, TYPE I	EACH	10		10	
	52100520	ANCHOR BOLTS, 1"	EACH	40		40	
	52100530	ANCHOR BOLTS, 1 1/4"	EACH	20		20	
	52200020	TEMPORARY SOIL RETENTION SYSTEM	SQ FT	342		342	
*	52200105	FURNISHING SOLDIER PILES (W SECTION)	FOOT	480		480	
*	52200200	DRILLING AND SETTING SOLDIER PILES (IN SOIL)	CU FT	2592		2592	
	52200250	UNTREATED TIMBER LAGGING	SQ FT	960		960	
	52200500	MECHANICALLY STABILIZED EARTH RETAINING WALL	SQ FT	4092		4092	
	550A0340	STORM SEWERS, CLASS A, TYPE 2 12"	FOOT	44	44		
	56109210	WATER VALVES TO BE ADJUSTED	EACH	1	1		
	58600101	GRANULAR BACKFILL FOR STRUCTURES	CU YD	126		126	

* = SPECIALTY ITEM

CODE NO.	ITEM	UNIT	TOTAL QUANTITY	90% FED / 10% STATE 0004 ROADWAY RECONSTR.	0010 BRIDGE REPLACEMENT	0021 HIGHWAY LIGHTING
58700300	CONCRETE SEALER	SQ FT	33767	31711	2056	
59100100	GEOCOMPOSITE WALL DRAIN	SQ YD	107		107	
60146304	PIPE UNDERDRAINS FOR STRUCTURES 4"	FOOT	220		220	
60200105	CATCH BASINS, TYPE A, 4'-DIAMETER, TYPE 1 FRAME, OPEN LID	EACH	2	2		
60255500	MANHOLES TO BE ADJUSTED	EACH	5	5		
60260100	INLETS TO BE ADJUSTED	EACH	2	2		
60500060	REMOVING INLETS	EACH	1	1		
60600605	CONCRETE CURB, TYPE B	FOOT	45	45		
60624610	CORRUGATED MEDIAN (DOWELLED)	SQ FT	687	687		
* 63000001	STEEL PLATE BEAM GUARDRAIL, TYPE A, 6 FOOT POSTS	FOOT	638	638		
* 63100045	TRAFFIC BARRIER TERMINAL, TYPE 2	EACH	5	5		
* 63100070	TRAFFIC BARRIER TERMINAL, TYPE 5	EACH	2	2		
* 63100085	TRAFFIC BARRIER TERMINAL, TYPE 6	EACH	2	2		
* 63100089	TRAFFIC BARRIER TERMINAL, TYPE 6B	EACH	4	4		

* = SPECIALTY ITEM

	CODE NO.	ITEM	UNIT	TOTAL QUANTITY	90% FED / 10% STATE		
					0004	0010	0021
					ROADWAY RECONSTR.	BRIDGE REPLACEMENT	HIGHWAY LIGHTING
*	63100167	TRAFFIC BARRIER TERMINAL, TYPE 1 (SPECIAL) TANGENT	EACH	4	4		
	63200310	GUARDRAIL REMOVAL	FOOT	572	572		
	64200108	SHOULDER RUMBLE STRIPS, 8 INCH	FOOT	1417	1,417		
	66400305	CHAIN LINK FENCE, 6'	FOOT	633	633		
	66900200	NON-SPECIAL WASTE DISPOSAL	CU YD	4670	4670		
	66900530	SOIL DISPOSAL ANALYSIS	EACH	2	2		
	67100100	MOBILIZATION	L SUM	1	1		
*	66901001	REGULATED SUBSTANCES PRE-CONSTRUCTION PLAN	L SUM	1	1		
*	66901003	REGULATED SUBSTANCES FINAL CONSTRUCTION REPORT	L SUM	1	1		
*	66901006	REGULATED SUBSTANCES MONITORING	CAL DA	40	40		
	70107025	CHANGEABLE MESSAGE SIGN	CAL DA	1200	1200		
	70300221	TEMPORARY PAVEMENT MARKING - LINE 4"- PAINT	FOOT	16496	16496		
	70300231	TEMPORARY PAVEMENT MARKING - LINE 5"- PAINT	FOOT	5871	5871		
	70300241	TEMPORARY PAVEMENT MARKING - LINE 6"- PAINT	FOOT	719	719		
	70300251	TEMPORARY PAVEMENT MARKING - LINE 8"- PAINT	FOOT	1781	1781		
	70307140	TEMPORARY PAVEMENT MARKING - LINE 8" TYPE IV TAPE	FOOT	2371	2371		

* = SPECIALTY ITEM
* * = NON-PARTICIPATING ITEMS

	CODE NO.	ITEM	UNIT	TOTAL QUANTITY	90% FED / 10% STATE		
					0004	0010	0021
					ROADWAY RECONSTR.	BRIDGE REPLACEMENT	HIGHWAY LIGHTING
	70400100	TEMPORARY CONCRETE BARRIER	FOOT	1100	1100		
	70400125	PINNING TEMPORARY CONCRETE BARRIER	EACH	975	975		
	70400200	RELOCATE TEMPORARY CONCRETE BARRIER	FOOT	888	888		
	70600260	IMPACT ATTENUATORS, TEMPORARY (FULLY REDIRECTIVE, NARROW), TEST LEVEL 3	EACH	2	2		
	70600332	IMPACT ATTENUATORS, RELOCATE (FULLY REDIRECTIVE, NARROW), TEST LEVEL 3	EACH	2	2		
*	72000100	SIGN PANEL - TYPE 1	SQ FT	12	12		
*	72000300	SIGN PANEL - TYPE 3	SQ FT	54	54		
*	72400330	REMOVE SIGN PANEL - TYPE 3	SQ FT	54	54		
*	72400500	RELOCATE SIGN PANEL ASSEMBLY - TYPE A	EACH	4	4		
*	72400710	RELOCATE SIGN PANEL - TYPE 1	SQ FT	32	32		
*	72501000	TERMINAL MARKER - DIRECT APPLIED	EACH	4	4		
	72900100	METAL POST - TYPE A	FOOT	21	21		
*	78000200	THERMOPLASTIC PAVEMENT MARKING - LINE 4"	FOOT	6576	6576		
*	78000500	THERMOPLASTIC PAVEMENT MARKING - LINE 8"	FOOT	1595	1595		

* = SPECIALTY ITEM
* * = NON-PARTICIPATING ITEMS

	CODE NO.	ITEM	UNIT	TOTAL QUANTITY	90% FED / 10% STATE		
					0004	0010	0021
					ROADWAY RECONSTR.	BRIDGE REPLACEMENT	HIGHWAY LIGHTING
*	78000600	THERMOPLASTIC PAVEMENT MARKING - LINE 12"	FOOT	427	427		
*	78004210	PREFORMED PLASTIC PAVEMENT MARKING, TYPE B - INLAID - LINE 4"	FOOT	2928	2928		
*	78004240	PREFORMED PLASTIC PAVEMENT MARKING, TYPE B - INLAID - LINE 8"	FOOT	318	318		
*	78004635	PREFORMED PLASTIC PAVEMENT MARKING, TYPE D - STANDARD - LINE 7"	FOOT	396	396		
*	78009004	MODIFIED URETHANE PAVEMENT MARKING - LINE 4"	FOOT	2443	2443		
*	78009008	MODIFIED URETHANE PAVEMENT MARKING - LINE 8"	FOOT	227	227		
*	78009012	MODIFIED URETHANE PAVEMENT MARKING - LINE 12"	FOOT	85	85		
*	78009024	MODIFIED URETHANE PAVEMENT MARKING - LINE 24"	FOOT	87	87		
*	78011040	GROOVING FOR RECESSED PAVEMENT MARKING 8"	FOOT	227	227		
*	78100100	RAISED REFLECTIVE PAVEMENT MARKER	EACH	364	364		
*	78200005	GUARDRAIL REFLECTORS, TYPE A	EACH	28	28		
	78300200	RAISED REFLECTIVE PAVEMENT MARKER REMOVAL	EACH	364	364		
*	78300202	PAVEMENT MARKING REMOVAL - WATER BLASTING	SQ FT	7565	7565		
*	81100320	CONDUIT ATTACHED TO STRUCTURE, 1" DIA., PVC COATED GALVANIZED STEEL	FOOT	950			950

* = SPECIALTY ITEM
* * = NON-PARTICIPATING ITEMS

	CODE NO.	ITEM	UNIT	TOTAL QUANTITY	90% FED / 10% STATE		
					0004	0010	0021
					ROADWAY RECONSTR.	BRIDGE REPLACEMENT	HIGHWAY LIGHTING
*	81100805	CONDUIT ATTACHED TO STRUCTURE, 3" DIA., PVC COATED GALVANIZED STEEL	FOOT	60			60
*	81300220	JUNCTION BOX, STAINLESS STEEL, ATTACHED TO STRUCTURE, 6" X 6" X 4"	EACH	24			24
*	81300530	JUNCTION BOX, STAINLESS STEEL, ATTACHED TO STRUCTURE, 12" X 10" X 6"	EACH	4			4
*	81300830	JUNCTION BOX, STAINLESS STEEL, ATTACHED TO STRUCTURE, 18" X 18" X 8"	EACH	4			4
*	81603081	UNIT DUCT, 600V, 3-1C NO.2, 1/C NO.4 GROUND, (XLP-TYPE USE), 1 1/2" DIA. POLYETHYLENE	FOOT	400			400
*	81702110	ELECTRIC CABLE IN CONDUIT, 600V (XLP-TYPE USE) 1/C NO. 10	FOOT	4600			4600
*	82110017	LUMINAIRE, LED, HIGHMAST, OUTPUT DESIGNATION J	EACH	113			113
*	82110026	LUMINAIRE, LED, UNDERPASS, SUSPENDED, OUTPUT DESIGNATION D	EACH	24			24
*	83600365	LIGHT POLE FOUNDATION, METAL, 15" BOLT CIRCLE, 10" X 8'	EACH	3			3
*	83800205	BREAKAWAY DEVICE, TRANSFORMER BASE, 15 INCH BOLT CIRCLE	EACH	2			2
*	84200600	REMOVAL OF LIGHTING UNIT, NO SALVAGE	EACH	28			28
*	84200804	REMOVAL OF POLE FOUNDATION	EACH	3			3
*	84400105	RELOCATE EXISTING LIGHTING UNIT	EACH	3			3
*	X1400190	REMOVAL OF HIGH MAST LUMINAIRES, SALVAGE	EACH	113			113

* = SPECIALTY ITEM
* * = NON-PARTICIPATING ITEMS

	CODE NO.	ITEM	UNIT	TOTAL QUANTITY	90% FED / 10% STATE		
					0004	0010	0021
					ROADWAY RECONSTR.	BRIDGE REPLACEMENT	HIGHWAY LIGHTING
*	X1400341	REMOVAL OF LUMINAIRE, SALVAGE	EACH	8			8
	X2010514	SELECTIVE CLEARING	ACRE	1	1		
	X4024000	TEMPORARY ACCESS (FIELD ENTRANCE)	EACH	1	1		
	X4421761	CLASS D PATCHES, TYPE I, 10 INCH (SPECIAL)	SQ YD	240	240		
	X4421763	CLASS D PATCHES, TYPE II, 10 INCH (SPECIAL)	SQ YD	240	240		
	X5080530	BAR TERMINATOR	EACH	1304		1304	
* *	X5537800	STORM SEWERS TO BE CLEANED 12"	FOOT	279	279		
* *	X5537900	STORM SEWERS TO BE CLEANED 15"	FOOT	428	428		
* *	X5538000	STORM SEWERS TO BE CLEANED 18"	FOOT	408	408		
	X6060052	COMBINATION CONCRETE CURB AND GUTTER, TYPE B-6.24 (SPECIAL)	FOOT	617	617		
	X6420002	FILLING EXISTING RUMBLE STRIP	FOOT	1417	1417		
	X6640300	CHAIN LINK FENCE REMOVAL	FOOT	894	894		
	X6640312	CHAIN LINK GATES TO BE REMOVED AND RE-ERECTED	EACH	1	1		
	X6700407	ENGINEER'S FIELD OFFICE, TYPE A (D1)	CAL MO	30	30		

* = SPECIALTY ITEM
* * = NON-PARTICIPATING ITEMS

	CODE NO.	ITEM	UNIT	TOTAL QUANTITY	90% FED / 10% STATE		
					0004	0010	0021
					ROADWAY RECONSTR.	BRIDGE REPLACEMENT	HIGHWAY LIGHTING
	X7010216	TRAFFIC CONTROL AND PROTECTION, (SPECIAL)	L SUM	1	1		
	X7010410	SPEED DISPLAY TRAILER	CAL MO	20	20		
	X7011015	TRAFFIC CONTROL AND PROTECTION (EXPRESSWAYS)	L SUM	1	1		
	X7013820	TRAFFIC CONTROL AND SURVEILLANCE (EXPRESSWAYS)	CAL DA	300	300		
	Z0004552	APPROACH SLAB REMOVAL	SQ YD	683	683		
	X8210007	LUMINAIRE,LED,ROADWAY,REPLACEMENT, OUTPUT DESIGNATION H	EACH	8	8		
* *	Z0010614	CLEANING EXISTING MANHOLE OR HANDHOLE	EACH	12	12		
* *	Z0010615	CLEANING EXISTING INLETS	EACH	19	19		
	X7200203	DETOUR SIGNING	LSUM	1	1		
	Z0018002	DRAINAGE SCUPPERS, DS-11	EACH	4		4	
	Z0029090	DIAMOND GRINDING (BRIDGE SECTION)	SQ YD	1480		1480	
	X7200061	TEMPORARY INFORMATION SIGNING	SQ FT	171	171		
*	Z0033020	LUMINAIRE SAFETY CABLE ASSEMBLY	EACH	8			8
*	X8000003	MAINTENANCE OF LIGHTING SYSTEM	CAL MO	12			12
*	Z0073510	TEMPORARY TRAFFIC SIGNAL TIMING	EACH	8	8		
Ø	Z0076600	TRAINEES	HOUR	2500	2500		
Ø	Z0076604	TRAINEES - TRAINING PROGRAM GRADUATE	HOUR	2500	2500		

Ø 0042

PAVEMENT AND SHOULDER REMOVAL

ALIGNMENT/LOCATION	FROM		TO		PAVEMENT REM (SQ YD)	PAVED SHOULDER REMOVAL (SQ YD)	SIDEWALK REMOVAL (SQ FT)	DRIVE PAVEMENT REM (SQ YD)	APPROACH SLAB REM (SQ YD)
	STATION	OFFSET	STATION	OFFSET					
W OF BRIDGE-DRIVEWAY	393+70.79	40.78' LT	393+83.30	40.04' LT				18	
W OF BRIDGE- FULL DEPTH PVMT	397+20.00	23.65' LT	398+81.31	24.00' RT	875				
SW OF BRIDGE-GORE AREA PVMT	397+34.45	40.49' RT	398+81.31	24.00' RT	108				
EB I-94 RAMP ENTRANCE	397+14.04	39.92' RT	398+04.41	85.43' RT	160				
E OF BRIDGE- FULL DEPTH PVMT	401+23.80	23.80' LT	403+20.00	22.44' RT	975				
I-94 MEDIAN AREA	527+28.55	9.50' RT	528+13.48	6.61 LT	32				
I-94 EB SHOULDER	526+82.5	57.51 RT	527+85.0	42.93 RT		152			
I-94 WB SHOULDER	527+75.4	58.31 LT	528+61.1	55.27 LT		32			
I-94 WB SHOULDER GORE AREA	526+65.12	54.37 LT	527+30.61	42.54 LT		77			
NW OF BRIDGE	398+28.5	31.13' LT	399+00.2	29.96' LT			358		
SW OF BRIDGE	398+72.7	26.50' RT	399+46.6	31.45' RT			361		
NW OF BRIDGE	400+54.2	31.13' LT	401+25.7	26.74' LT			343		
SW OF BRIDGE	400+96.9	53.38' RT	401+71.6	26.58' RT			346		
EB MCR SIDEWALK	393+80.5	44.61' RT	394+03.1	52.60' RT			71		
WEST OF BRIDGE	398+45.8	24.00' LT	399+46.6	24.00' RT					341
EAST OF BRIDGE	400+54.2	40.49' RT	401+60.9	24.00' RT					342
NOMINAL QUANTITY									
TOTAL					2150	261	1478	18	683

* NOMINAL QUANTITY FOR USE AS DIRECTED BY THE ENGINEER FOR SHOULDER REPAIRS

CHAIN LINK FENCE & GATE REMOVAL

ALIGNMENT/LOCATION	FROM		TO		CH LK FENCE REMOV (FOOT)	CH LK GATES TO BE REMOVED AND RE-ERECTED (EACH)	CH LK FENCE 6' (FOOT)
	STATION	OFFSET	STATION	OFFSET			
W OF BRIDGE AT DRIVEWAY						1	
NW QUADRANT AT BRIDGE	393+58.30	37.6 RT	399+29.96	31.1 RT	541		13
NW QUADRANT AT BRIDGE	393+83.06	41.02 LT	394+50.00	47.03 LT			67
NW QUADRANT AT BRIDGE	396+60.00	43.33 LT	398+40.15	37.42 LT			180
SE QUADRANT AT BRIDGE	401+60.88	32.54' RT	402+29.43	121.91' RT	175		111
SW QUADRANT AT BRIDGE	398+72.60	32.21 RT	396+30.13	56.98 RT	73		
NE QUADRANT AT BRIDGE	401+13.01	32.41 LT	403+50.0	64.25 LT			236
NE QUADRANT AT BRIDGE	401+13.01	32.4 RT	401+17.78	64.3 RT	105		26
TOTAL					894	1	633

EARTHWORK SCHEDULE

LOCATION	FROM STA.	TO STA.	EARTH EXCAVATION (CU YD)	STRUCTURE EARTH EXCAVATION (CU YD)	EARTH EXCAVATION (ADJUSTED FOR SHRINKAGE**) (CU YD)	EMBANKMENT (FILL) (CU YD)	EARTHWORK BALANCE (WASTE(+) OR SHORTAGE(-)) (CU YD)	FURNISHED EXCAVATION (CU YD)
MICHIGAN CITY ROAD WEST OF BRIDGE	393+00.00	393+50.00	5.5		5	0.1	5	
MICHIGAN CITY ROAD WEST OF BRIDGE	393+50.00	393+77.04	8.2		10	0.0	10	
MICHIGAN CITY ROAD WEST OF BRIDGE	393+77.04	394+00.00	9.3		10	0.0	10	
MICHIGAN CITY ROAD WEST OF BRIDGE	394+00.00	394+50.00	26.1		25	8.2	17	
MICHIGAN CITY ROAD WEST OF BRIDGE	394+50.00	395+00.00	29.2		25	18.6	6	
MICHIGAN CITY ROAD WEST OF BRIDGE	395+00.00	395+50.00	23.7		25	27.2	-2	
MICHIGAN CITY ROAD WEST OF BRIDGE	395+50.00	396+00.00	21.7		20	29.2	-9	
MICHIGAN CITY ROAD WEST OF BRIDGE	396+00.00	396+50.00	21.6		20	23.3	-3	
MICHIGAN CITY ROAD WEST OF BRIDGE	396+50.00	396+60.00	4.5		5	22.0	-17	
MICHIGAN CITY ROAD WEST OF BRIDGE	396+60.00	397+00.00	15.1		15	140.7	-126	
MICHIGAN CITY ROAD WEST OF BRIDGE	397+00.00	397+20.00	38.6		35	68.5	-33	
MICHIGAN CITY ROAD WEST OF BRIDGE	397+20.00	397+50.00	63.5		55	98.7	-44	
MICHIGAN CITY ROAD WEST OF BRIDGE	397+50.00	398+00.00	149.1		130	114.8	15	
MICHIGAN CITY ROAD WEST OF BRIDGE	398+00.00	398+50.00	70.8		65	174.1	-109	
MICHIGAN CITY ROAD WEST OF BRIDGE	398+50.00	398+68.08	12.3		15	165.7	-151	
BRIDGE OMMISSION						SUB-TOTAL	-431	431
MICHIGAN CITY ROAD EAST OF BRIDGE	401+45.59	401+50.00	2.2		5	29.3	-24	
MICHIGAN CITY ROAD EAST OF BRIDGE	401+50.00	402+00.00	47.6		45	244.7	-200	
MICHIGAN CITY ROAD EAST OF BRIDGE	402+00.00	402+50.00	89.5		80	139.5	-59	
MICHIGAN CITY ROAD EAST OF BRIDGE	402+50.00	403+00.00	119.8		105	106.6	-2	
MICHIGAN CITY ROAD EAST OF BRIDGE	403+00.00	403+20.00	48.5		45	36.1	9	
MICHIGAN CITY ROAD EAST OF BRIDGE	403+20.00	403+50.00	40.3		35	27.1	8	
MICHIGAN CITY ROAD EAST OF BRIDGE	403+50.00	403+72.34	9.4		10	6.5	3	
MICHIGAN CITY ROAD EAST OF BRIDGE	403+72.34	404+00.00	11.8		10	0.5	10	
MICHIGAN CITY ROAD EAST OF BRIDGE	404+00.00	404+50.00	12.6		15	1.8	13	
MICHIGAN CITY ROAD EAST OF BRIDGE	404+50.00	405+00.00	6.3		10	1.8	8	
MICHIGAN CITY ROAD EAST OF BRIDGE	405+00.00	405+50.00	5.8		5	0.2	5	
MICHIGAN CITY ROAD EAST OF BRIDGE	405+50.00	406+00.00	2.5		5	1.8	3	
						SUB-TOTAL	-226	226
	-	-						
TOTAL			896		830	1,487	-657	657
EB I-94 SHOULDER - SOUTH OF BRIDGE	526+24.80	526+82.53	33		30		30	
EB I-94 SHOULDER - NORTH OF BRIDGE	527+58.40	527+87.04	14		15		15	
WB I-94 SHOULDER - NORTH OF BRIDGE	527+54.93	527+90.03	16		15		15	
WB I-94 SHOULDER - SOUTH OF BRIDGE	528+61.89	529+18.76	46		40		40	
WEST BRIDGE ABUTMENT	526+82.53	527+34.76		1,352	1,150		1,150	
EAST BRIDGE ABUTMENT	527+75.43	529+00.75		1,611	1,370		1,370	
WEST MSE WALL	526+82.53	527+34.76		157	135			
EAST MSE WALL	527+75.43	529+00.75		157	135			
MCRB RETAINING WALL	394+50.00	396+60.00		39	35			
I-94 MEDIAN PIER	527+28.55	528+13.48		155	135		135	
TOTAL			109	3,471	3,060		2,098	
GRAND TOTAL			1,005	3,471	3,890	1,487	2,098	

* SEE STRUCTURAL PLANS

** SHRINKAGE FACTOR OF 0.15 APPLIED PER IDOT D1 MATERIALS GROUP

TREE REMOVAL

ALIGNMENT/LOCATION	FROM		TO		TREE REMOV 6-15 (UNIT)	TREE REMOV OVER 15 (UNIT)	TREE REMOV ACRES (AC)	TREE ROOT PRUNING EACH	TREE PRUNING (1 TO 10 IN DIA) EACH	TREE PRUNING (OVER 10 IN DIA) EACH
	STATION	OFFSET	STATION	OFFSET						
NW QUADRANT	393+29.9	LT	398+76.6	LT			0.41	3	1	1
SE QUADRANT	400+81.3	RT	405+67.51	RT			0.25	2		1
SW QUADRANT	394+34.0	RT	397+66.2	RT			0.29	2	2	2
NOMINAL QUANTITY*					92	40				
TOTAL					92	40	0.95			
ROUNDED TOTAL					N/A	N/A	1.00	7	3	4

* NOMINAL QUANTITY USAGE TO BE DETERMINED BY THE ENGINEER IN THE FIELD.

MODEL: $MODELNAME$
FILE NAME: \\CHICAGO2\gtanel\P22072C IDOT D1 PTB 204-001 Michigan City 3d Bridge\03A Design\C1 CADD\C2 Sheet\Roadway\017-D162R62-sht-SCHEDULE 01.dgn

DELTA ENGINEERING GROUP, LLC
CONSULTING ENGINEERS, CONSTRUCTION MANAGERS, SURVEYORS
111 W JACKSON BLVD, SUITE 910
CHICAGO, IL 60604
T 312.377.7700, F 312.427 6145

USER NAME = denisb	DESIGNED - MA/DB	REVISED -
	DRAWN - DB	REVISED -
PLOT SCALE = 40.0000 ' / in.	CHECKED - MA	REVISED -
PLOT DATE = 12/20/2024	DATE - 12/13/2024	REVISED -

STATE OF ILLINOIS
DEPARTMENT OF TRANSPORTATION

MICHIGAN CITY ROAD OVER I-94
SCHEDULE OF QUANTITIES

SCALE: N/A | SHEET 01 OF 02 SHEETS | STA. N/A | TO STA. N/A

F.A.I. RTE.	SECTION	COUNTY	TOTAL SHEETS	SHEET NO.
94	FAI 94 22 STRUCTURE 2	COOK	157	17

CONTRACT NO. 62R62

ILLINOIS | FED. AID PROJECT

PROPOSED PAVEMENT AND SHOULDER

ALIGNMENT/LOCATION	FROM		TO		AGG SUBGRADE IMPR 12 (SQ YD)	AGG BASE CSE B 2 (SQ YD)	AGG BASE CSE B 4 (SQ YD)	HMA BASE CSE 12 3/4 (SQ YD)	HMA SC IL-9.5 D N70 (TON)	PVT CON PCC BR APP SL (SQ YD)	PCC PVT 10 JOINTD (SQ YD)	PCC DRIVEWAY PAVT 5 (SQ YD)	PC CONC SIDEWALK 5 (SQ FT)	AGGREGAT E SHLDS B 6 (SQ YD)	PCC SHOULDERS 10 (SQ YD)	CONCRETE CURB, TYPE B (FOOT)	CORRUGATE D MED DOW (SQ FT)
	STATION	OFFSET	STATION	OFFSET													
WEST OF BRIDGE - FULL PAVMT	397+20.00	23.65 LT	398+85.99	24.00 RT	951						615						
WEST OF BRIDGE - GORE AREA	397+34.45	40.49 RT	398+86.00	24.00 RT	90						110						
I-94 EB ENTRANCE RAMP	397+16.08	37.09 RT	398+01.78	93.05 RT	174						148						
EAST OF BRIDGE - FULL PAVMT	401+78.50	24.00 LT	403+20.00	24.44 RT	1065						750						
I-94 EB SHOULDER	526+78.45	63.22 RT	527+85.00	42.93 RT	159		486	159	18					335			
I-94 EB INSIDE LANE PAVEMENT	527+28.55	5.80 RT	528+13.48	9.56 RT	32			32	4								
I-94 MEDIAN PAVEMENT	527+28.55	6.12 LT	528+13.48	6.60 RT	117			117	14								
I-94 WB SHOULDER	527+75.70	65.12 LT	528+61.12	55.27 LT	48		240	48	6					481			
WEST OF BRIDGE CONNECTOR	398+35.20	24.00 LT	398+86.00	24.00 RT						176							
EAST OF BRIDGE CONNECTOR	401+27.67	24.00 LT	401+78.50	24.00 RT						176							
WB MCRD WEST OF BRIDGE	393+71.09	40.20 LT	393+83.06	41.02 LT								18					
WB MCRD SIDEWALK	393+29.87	39.77 LT	393+71.09	40.20 LT			27						238				
WB MCRD SIDEWALK	393+83.06	41.02 LT	398+40.15	37.42 LT			499						4484				
EB MCRD SIIDEWALK	397+75.71	56.61 RT	398+85.99	24.00 RT		80							718				
EB MCRD SIIDEWALK	394+32.72	42.68 RT	397+68.82	85.91 RT		261							2347				
EB MCRD SIIDEWALK	393+80.47	44.61 RT	394+03.12	52.60 RT		239							66				
WB MCRD SIDEWALK	401+27.67	24.00 LT	403+72.34	26.58 LT			275						2466				
EB MCRD SIIDEWALK	401+65.43	26.58 RT	405+68.98	30.90 RT		8							2143				
I-94 RAMP ENTRANCE LT SIDE	397+75.71	56.61 RT	398+35.77	75.30 RT											10		
I-94 RAMP ENTRANCE RT SIDE	397+53.83	69.94 RT	398+01.78	93.05 RT											8		
WEST OF BRIDGE GORE AREA	397+34.45	40.49 RT	398+09.31	24.00 RT													687
EB MCRD GORE AREA	397+68.83	44.77 RT	398+10.06	29.73 RT												45	
NOMINAL QUANTITY																	
TOTAL					2636	588	1527	356	42	352	1623	18	12462	816	18	45	687

* NOMINAL QUANTITY FOR USE AS DIRECTED BY THE ENGINEER FOR SHOULDER REPAIRS

PROPOSED CURB AND GUTTER

ALIGNMENT/LOCATION	FROM		TO		COMB CC&G TB6.24 SPECIAL (FOOT)
	STATION	OFFSET	STATION	OFFSET	
WB MICHIGAN CITY BRIDGE ROAD	397+20.0	23.65 LT	398+50.2	24.00 LT	128.5
EB MICHIGAN CITY BRIGE ROAD	398+22.7	26.58 RT	398+86.0	24.00 RT	66.5
WB OF MCRD BRIDGE	401+18.4	23.80' LT	403+20.0	43.47' LT	202
EB OF MCRD BRIDGE	401+71.6	26.58' RT	403+20.0	22.44' LT	165
I-94 SB ENTRANCE RAMP	397+54.1	69.4 RT	397+77.1	79.33 RT	25.0
SB BLACKSTONE AVE	393+80.5	44.61 RT	394+03.1	52.60 RT	15.0
NB BLACKSTONE AVE	18+79.7	101.3 LT	19+08.2	78.2 LT	15.0
TOTAL					617

* NOMINAL QUANTITY FOR USE AS DIRECTED BY THE ENGINEER FOR SHOULDER REPAIRS

CURB AND GUTTER REMOVAL

ALIGNMENT/LOCATION	FROM		TO		COMB CURB GUTTER REM (FOOT)
	STATION	OFFSET	STATION	OFFSET	
WB OF MCRD BRIDGE	397+20.0	23.65' LT	23+07.3	8.0 RT	125
EB OF MCRD BRIDGE	397+79.4	35.28' RT	398+81.3	24.00' RT	84
WB OF MCRD BRIDGE	401+18.4	23.80' LT	403+20.0	43.47' LT	202
EB OF MCRD BRIDGE	401+71.6	26.58' RT	403+20.0	22.44' LT	165
TOTAL					636

PROPOSED GUARDRAIL / TRAFFIC BARRIER TERMINALS

ALIGNMENT/LOCATION	FROM		TO		SPBGR TY A 6FT POSTS (FOOT)	TRAF BAR TERM T2 (EACH)	TRAF BAR TERM T5 (EACH)	TRAF BAR TERM T6 (EACH)
	STATION	OFFSET	STATION	OFFSET				
WB MCRD WEST OF BRIDGE	397+85.12	26.58 LT	398+35.12	26.58 LT	50.0			
WB MCRD EAST OF BRIDGE	401+61.68	26.63 LT	402+99.18	26.63 LT	137.5			
EB MCRD WEST OF BRIDGE	398+24.64	34.08 RT	398+74.64	34.08 RT	50.0			
EB MCRD WEST OF BRIDGE	401+68.15	33.58 RT	401+93.15	33.58 RT	25.0			
STONY ISLAND AVE	402+97.53	56.35 RT	403+4302	38.64 RT	50.0			
EB I-94 SHOULDER	525+35.14	60.06 RT	526+60.13	59.15 RT	125.0			
WB I-94 SHOULDER	528+79.44	60.33 LT	530.79.44	62.66 LT	200.0			
WB MCRD WEST OF BRIDGE	397+72.62	26.58 LT	397+85.12	26.58 LT		1		
EB MCRD EAST OF BRIDGE	401+93.15	33.58 RT	402+05.65	33.58 RT		1		
STONY ISLAND AVE	403+43.02	38.64 RT	403+55.28	35.85 RT		1		
EB I-94 SHOULDER	526+60.13	59.15 RT	526+72.63	59.36 RT		1		
WB I-94 SHOULDER	528+66.94	60.33 LT	528+79.44	60.33 LT		1		
WB MCRD WEST OF BRIDGE	398+35.12	26.58 LT	398+47.62	26.58 LT			1	
EB MCRD EAST OF BRIDGE	401+55.65	33.58 RT	401+68.15	33.58 RT			1	
EB MCRD WEST OF BRIDGE	401+24.18	34.08 RT	401+61.68	34.08 RT				1
EB MCRD WEST OF BRIDGE	398+74.64	34.08 RT	399+12.14	34.08 RT				1
TOTAL					638	5	2	2

* NOMINAL QUANTITY FOR USE AS DIRECTED BY THE ENGINEER FOR SHOULDER REPAIRS

CONT.

PROPOSED GUARDRAIL / TRAFFIC BARRIER TERMINALS

ALIGNMENT/LOCATION	FROM		TO		TRAF BAR TERM T6B (EACH)	TR BAR TRM T1 SPL TAN (EACH)	TERMINAL MARKER - DA (EACH)
	STATION	OFFSET	STATION	OFFSET			
I-94 MEDIAN WB	526+96.33	2.44 LT	527+46.06	1.49' LT	1		
I-94 MEDIAN WB	401+61.68	26.63 LT	528+47.05	3.35 LT	1		
I-94 MEDIAN EB	526+96.33	2.31 RT	528+47.05	3.35 LT	1		
I-94 MEDIAN EB	527+46.37	1.65 RT	528+46.99	3.68 RT	1		
WB MCRD EAST OF BRIDGE	402+99.18	26.63 LT	403+24.18	26.30 LT		1	1
EB MCRD WEST OF BRIDGE	398+01.23	42.84 RT	398+24.64	34.08 RT		1	1
WB I-94 SHOULDER	530+79.44	62.66 LT	531+04.44	62.66 LT		1	1
EB I-94 SHOULDER	525+10.14	60.40 RT	525+35.14	60.06 RT		1	1
TOTAL					4	4	4

* NOMINAL QUANTITY FOR USE AS DIRECTED BY THE ENGINEER FOR SHOULDER REPAIRS

PROPOSED CURB AND GUTTER

ALIGNMENT/LOCATION	FROM		TO		COMB CC&G TB6.24 SPECIAL (FOOT)
	STATION	OFFSET	STATION	OFFSET	
WB MICHIGAN CITY BRIDGE ROAD	397+20.0	23.65 LT	398+50.2	24.00 LT	128.5
EB MICHIGAN CITY BRIGE ROAD	398+22.7	26.58 RT	398+86.0	24.00 RT	66.5
WB OF MCRD BRIDGE	401+18.4	23.80' LT	403+20.0	43.47' LT	202
EB OF MCRD BRIDGE	401+71.6	26.58' RT	403+20.0	22.44' LT	165
I-94 SB ENTRANCE RAMP	397+54.1	69.4 RT	397+77.1	79.33 RT	25.0
SB BLACKSTONE AVE	393+80.5	44.61 RT	394+03.1	52.60 RT	15.0
NB BLACKSTONE AVE	18+79.7	101.3 LT	19+08.2	78.2 LT	15.0
TOTAL					617

* NOMINAL QUANTITY FOR USE AS DIRECTED BY THE ENGINEER FOR SHOULDER REPAIRS

MODEL: $MODELNAME$
FILE NAME: \\CHICAGO2\cstarell\P220720 IDOT D1 PTB 204-001 Michigan City 4d Bridge\03A Design\C1 CADD\C2 Sheet\Roadway\018-D162R62-ih-SCHEDULE 02.dgn

DELTA ENGINEERING GROUP, LLC
CONSULTING ENGINEERS, CONSTRUCTION MANAGERS, SURVEYORS
111 W JACKSON BLVD, SUITE 910
CHICAGO, IL 60604
T 312.377.7700, F 312.427 6145

USER NAME = denisb	DESIGNED - MA/DB	REVISED -	
	DRAWN - DB	REVISED -	
PLOT SCALE = 40.0000 ' / in.	CHECKED - MA	REVISED -	
PLOT DATE = 12/20/2024	DATE - 12/13/2024	REVISED -	

STATE OF ILLINOIS
DEPARTMENT OF TRANSPORTATION

MICHIGAN CITY ROAD OVER I-94
SCHEDULE OF QUANTITIES

SCALE: N/A | SHEET 02 OF 02 SHEETS | STA. N/A | TO STA. N/A

F.A.I. RTE.	SECTION	COUNTY	TOTAL SHEETS	SHEET NO.
94	FAI 94 22 STRUCTURE 2	COOK	157	18
		CONTRACT NO. 62R62		
		ILLINOIS	FED. AID PROJECT	

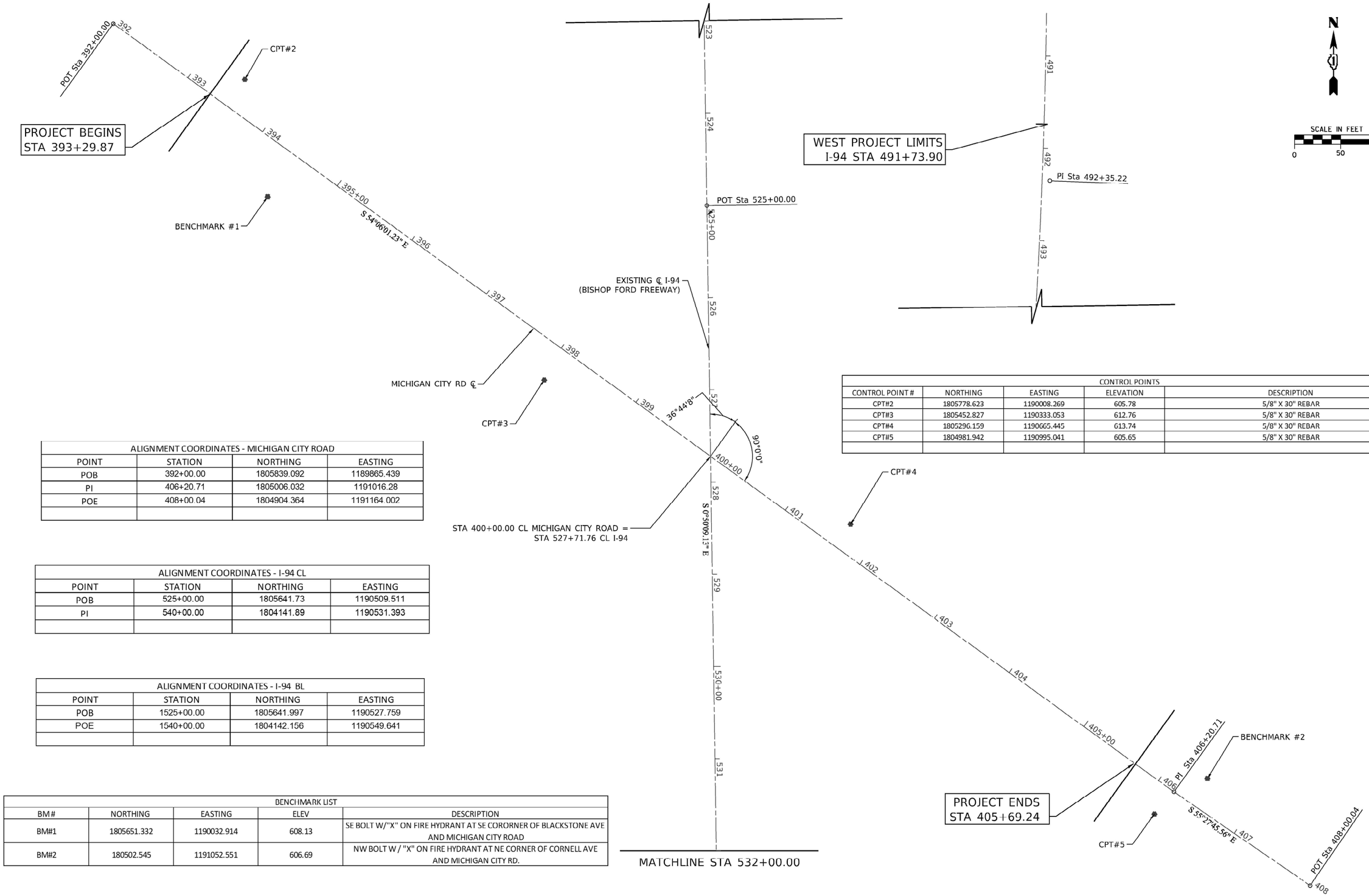

ALIGNMENT COORDINATES - MICHIGAN CITY ROAD			
POINT	STATION	NORTHING	EASTING
POB	392+00.00	1805839.092	1189865.439
PI	406+20.71	1805006.032	1191016.28
POE	408+00.04	1804904.364	1191164.002

ALIGNMENT COORDINATES - I-94 CL			
POINT	STATION	NORTHING	EASTING
POB	525+00.00	1805641.73	1190509.511
PI	540+00.00	1804141.89	1190531.393

ALIGNMENT COORDINATES - I-94 BL			
POINT	STATION	NORTHING	EASTING
POB	1525+00.00	1805641.997	1190527.759
POE	1540+00.00	1804142.156	1190549.641

BENCHMARK LIST				
BM #	NORTHING	EASTING	ELEV	DESCRIPTION
BM#1	1805651.332	1190032.914	608.13	SE BOLT W/"X" ON FIRE HYDRANT AT SE CORORNER OF BLACKSTONE AVE AND MICHIGAN CITY ROAD
BM#2	180502.545	1191052.551	606.69	NW BOLT W / "X" ON FIRE HYDRANT AT NE CORNER OF CORNELL AVE AND MICHIGAN CITY RD.

CONTROL POINTS				
CONTROL POINT #	NORTHING	EASTING	ELEVATION	DESCRIPTION
CPT#2	1805778.623	1190008.269	605.78	5/8" X 30" REBAR
CPT#3	1805452.827	1190333.053	612.76	5/8" X 30" REBAR
CPT#4	1805296.159	1190665.445	613.74	5/8" X 30" REBAR
CPT#5	1804981.942	1190995.041	605.65	5/8" X 30" REBAR

MODEL: $MODELNAME$
FILE NAME: \\CHICAGO22\data\P22072C IDOT D1 PTB 204-001 Michigan City 3d Bridge\03A Design\C1 CADD\C2 Sheet\Roadway\019-D162R62-sht-AT3 01.dgn

DELTA ENGINEERING GROUP, LLC
CONSULTING ENGINEERS, CONSTRUCTION MANAGERS, SURVEYORS
111 W JACKSON BLVD, SUITE 910
CHICAGO, IL 60604
T 312.377.7700, F 312.427 6145

USER NAME = denisb	DESIGNED - MA/DB	REVISED -	
	DRAWN - DB	REVISED -	
PLOT SCALE = 100.0000 ' / in.	CHECKED - MA	REVISED -	
PLOT DATE = 12/13/2024	DATE - 12/13/2024	REVISED -	

STATE OF ILLINOIS
DEPARTMENT OF TRANSPORTATION

MICHIGAN CITY ROAD OVER I-94
ALIGNMENT, TIES AND BENCHMARK

SCALE: N/A | SHEET 01 OF 02 SHEETS | STA. N/A TO STA. N/A

F.A.I. RTE.	SECTION	COUNTY	TOTAL SHEETS	SHEET NO.
94	FAI 94 22 STRUCTURE 2	COOK	157	19

CONTRACT NO. 62R62
ILLINOIS | FED. AID PROJECT

MATCHLINE STA 531+00.00

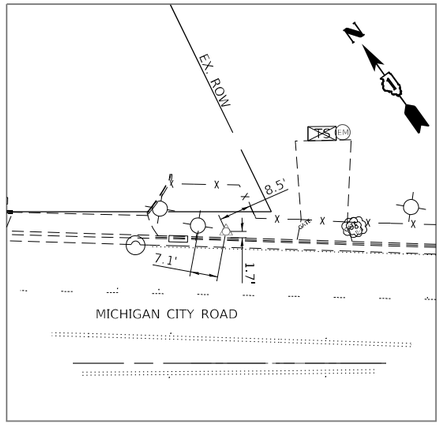

CP #2 (58" X 30" REBAR)
NTS

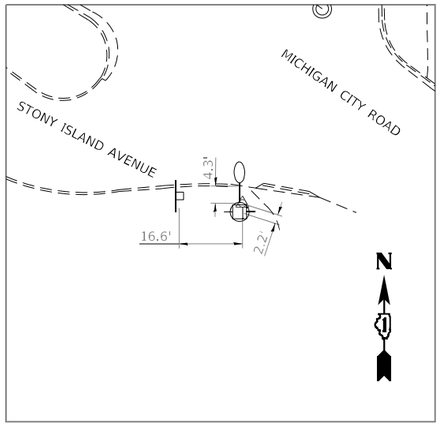

CP #5 (58" X 30" REBAR)
NTS

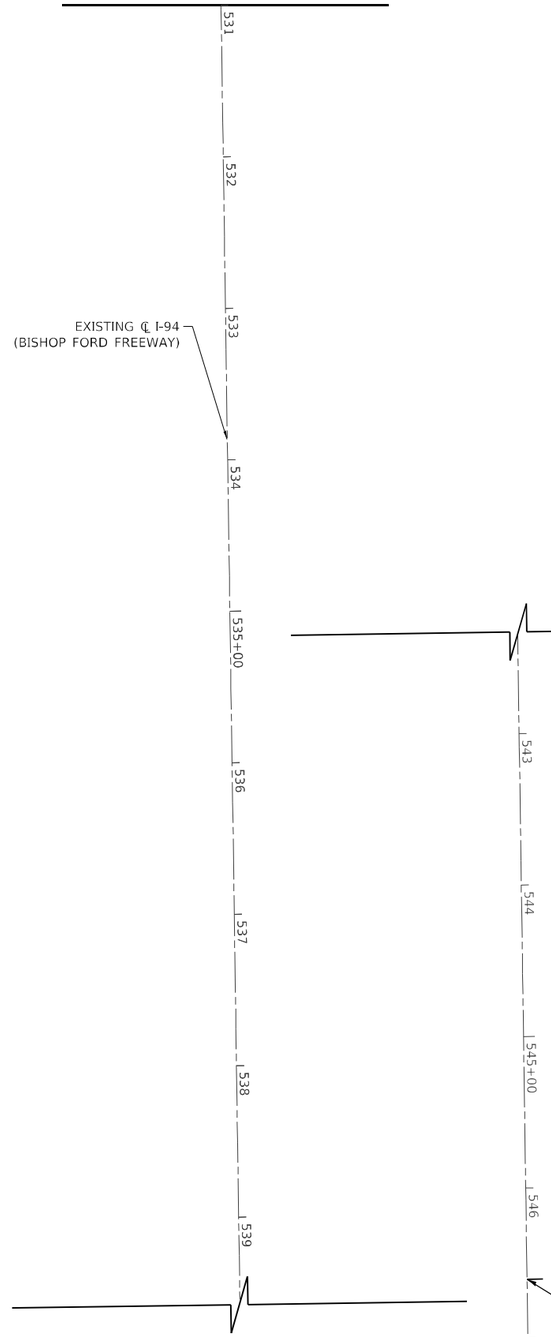

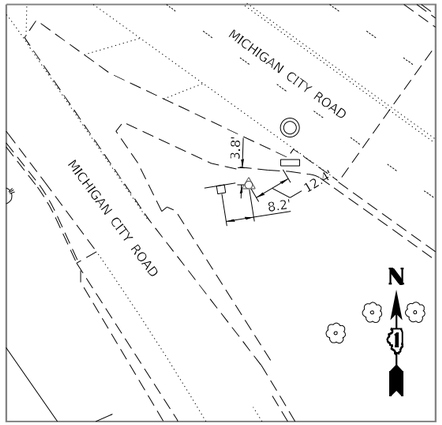

CP #3 (58" X 30" REBAR)
NTS

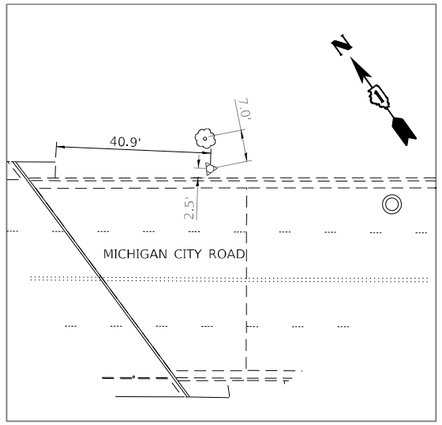

CP #4 (58" X 30" REBAR)
NTS

EAST PROJECT LIMITS
I-94 STA 546+60.19

MODEL: $MODEL NAMES
FILE NAME: \\CHICAGO22\share\LP220720 IDOT D1 PTB 204-001 Michigan City Rd Bridge\03A Design\01 CADD\02 Sheet\Roadway\023-D1R2R62-sht-ATB 02.dgn

DELTA ENGINEERING GROUP, LLC CONSULTING ENGINEERS, CONSTRUCTION MANAGERS, SURVEYORS 111 W JACKSON BLVD, SUITE 910 CHICAGO, IL 60604 T 312.377.7700, F 312.427 6145	USER NAME = denisb	DESIGNED - MA/DB	REVISED -	STATE OF ILLINOIS DEPARTMENT OF TRANSPORTATION	MICHIGAN CITY ROAD OVER I-94 ALIGNMENT, TIES AND BENCHMARKS	F.A.I. RTE.	SECTION	COUNTY	TOTAL SHEETS / SHEET NO.
		DRAWN - DB	REVISED -			94	FAI 94 22 STRUCTURE 2	COOK	157 / 20
	PLOT SCALE = 100.0000 ' / in.	CHECKED - MA	REVISED -					CONTRACT NO. 62R62	
	PLOT DATE = 12/13/2024	DATE - 12/13/2024	REVISED -		SCALE: N/A SHEET 02 OF 02 SHEETS STA. N/A TO STA. N/A		ILLINOIS	FED. AID PROJECT	

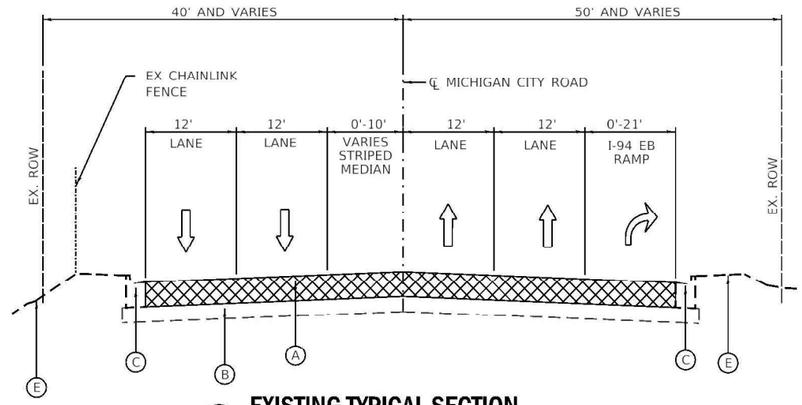

1 EXISTING TYPICAL SECTION

LOOKING EAST
STA 393+29.87 TO 398+93.14
STA 397+20.00 TO STA 398+93.14 (PAVEMENT REMOVAL LIMITS)

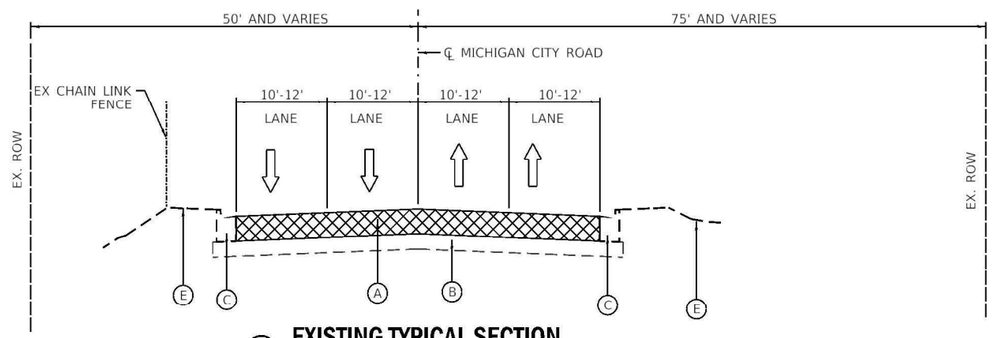

2 EXISTING TYPICAL SECTION

LOOKING EAST
STA 401+18.40 TO 405+69.24
STA 401+18.40 TO STA 403+20.00 (PAVEMENT REMOVAL LIMITS)

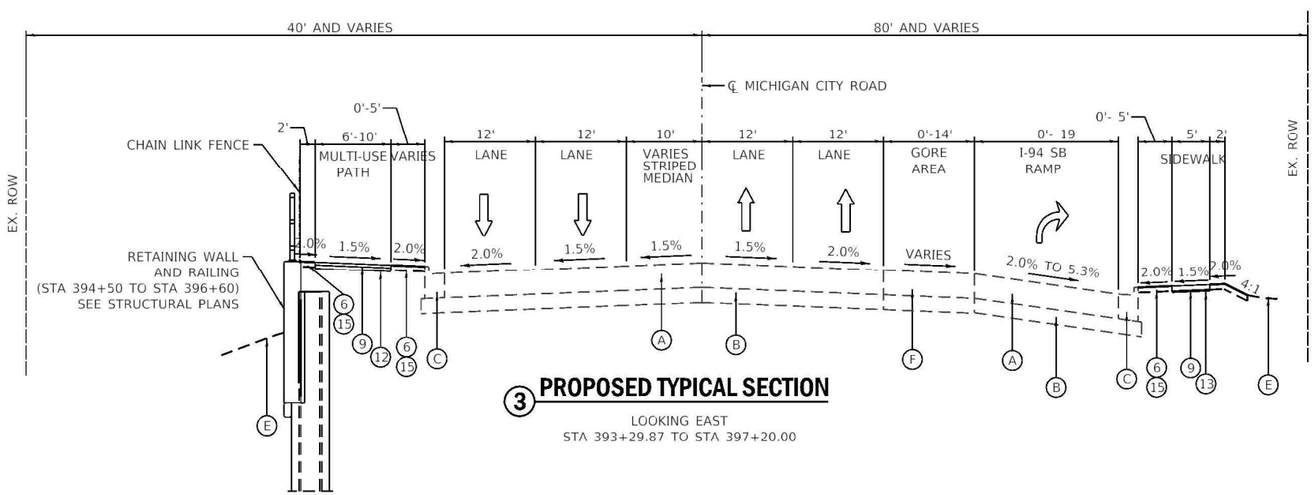

3 PROPOSED TYPICAL SECTION

LOOKING EAST
STA 393+29.87 TO STA 397+20.00

LEGEND

PAVEMENT REMOVAL

EXISTING LEGEND

- (A) EXISTING PCC PAVEMENT (10" PCC)
- (B) EXISTING SUBBASE
- (C) EXISTING CURB & GUTTER, TYPE B-6.24
- (D) EXISTING SIDEWALK
- (E) EXISTING TOPSOIL
- (F) EXISTING GORE
- (G) EXISTING HMA SURFACE
- (H) EXISTING HMA BINDER
- (I) EXISTING HMA SUBBASE
- (J) EXISTING HMA SHOULDER
- (K) EXISTING AGGRAGATE BASE COURSE
- (L) FILLING EXISTING RUMBLE STRIP

PROPOSED LEGEND

- (1) PORTLAND CEMENT CONCRETE PAVEMENT 10" (JOINTED)
- (2) HOT-MIX ASPHALT SURFACE COURSE, IL-9.5, MIX "D", N70
- (3) AGGREGATE SUBGRADE IMPROVEMENT 12"
- (4) HOT-MIX ASPHALT BASE COURSE. 12 3/4"
- (5) CORRUGATED MEDIAN (DOWELLED)
- (6) TOPSOIL FURNISH AND PLACE, 4"
- (7) COMBINATION CONCRETE CURB AND GUTTER, TYPE B-6.24 (SPECIAL)
- (8) STEEL PLATE BEAM GUARDRAIL, TYPE A, 6 FOOT POSTS
- (9) PORTLAND CEMENT CONCRETE SIDEWALK 5 INCH
- (10) PORTLAND CEMENT CONCRETE DRIVEWAY PAVEMENT, 5 INCH
- (11) PORTLAND CEMENT CONCRETE SHOULDERS 10"
- (12) AGGREGATE BASE COURSE, TYPE B 4"
- (13) AGGREGATE BASE COURSE, TYPE B 2"
- (14) AGGREGATE SHOULDERS, TYPE B 6"
- (15) SEEDING (SEE EROSION CONTROL PLAN)
- (16) RUMBLE STRIP

NOTES:

THE "AGGREGATE SUBGRADE IMPROVEMENT" ITEM/MATERIAL SHOULD BE USED TO REPLACE ANY UNSUITABLE SOILS BELOW THE BOTTOM OF THE IMPROVED SUBGRADE LAYER THAT ARE ENCOUNTERED IN THE FIELD DURING CONSTRUCTION. THE ACTUAL NEED FOR REMOVAL AND REPLACEMENT WITH AGGREGATE SUBGRADE IMPROVEMENT SHOULD BE DETERMINED IN THE FIELD AT THE TIME OF CONSTRUCTION BY THE GEOTECHNICAL ENGINEER OR SOILS INSPECTOR. ALL POTENTIALLY UNSTABLE SOILS SHOULD BE TESTED WITH A CONE PENETROMETER AND TREATED IN ACCORDANCE WITH ARTICLE 301.04 OF THE SSRBC AND THE UNDERCUT GUIDELINES IN THE IDOT SUBGRADE STABILITY MANUAL. ANY MATERIAL NOT NEEDED FOR UNDERCUT REPLACEMENT AT THE TIME OF CONSTRUCTION SHOULD BE DELETED FROM THE CONTRACT WITH NO EXTRA COMPENSATION TO THE CONTRACTOR.

DELTA ENGINEERING GROUP, LLC
CONSULTING ENGINEERS, CONSTRUCTION MANAGERS, SURVEYORS
111 W JACKSON BLVD, SUITE 910
CHICAGO, IL 60604
T 312.377.7700, F 312.427 6145

USER NAME = denisb	DESIGNED - MA/DB	REVISED -	
	DRAWN - DB	REVISED -	
PLOT SCALE = 20.0000 ' / in.	CHECKED - MA	REVISED -	
PLOT DATE = 1/3/2025	DATE - 12/13/2024	REVISED -	

STATE OF ILLINOIS
DEPARTMENT OF TRANSPORTATION

MICHIGAN CITY ROAD OVER I-94
TYPICAL SECTION

SCALE: 1:10 | SHEET 01 OF 03 SHEETS | STA. N/A TO STA. N/A

F.A.I. RTE.	SECTION	COUNTY	TOTAL SHEETS	SHEET NO.
94	FAI 94 22 STRUCTURE 2	COOK	157	21
		CONTRACT NO. 62R62		
		ILLINOIS	FED. AID PROJECT	

MODEL: SMODELNAMES
FILE NAME: G:\P220720 IDOT D1 PTB 204-001 Michigan City Rd Bridge\03A Design\01 CADD\02 Sheet\Roadway\021-D162R62-sht-Typical 01.dgn

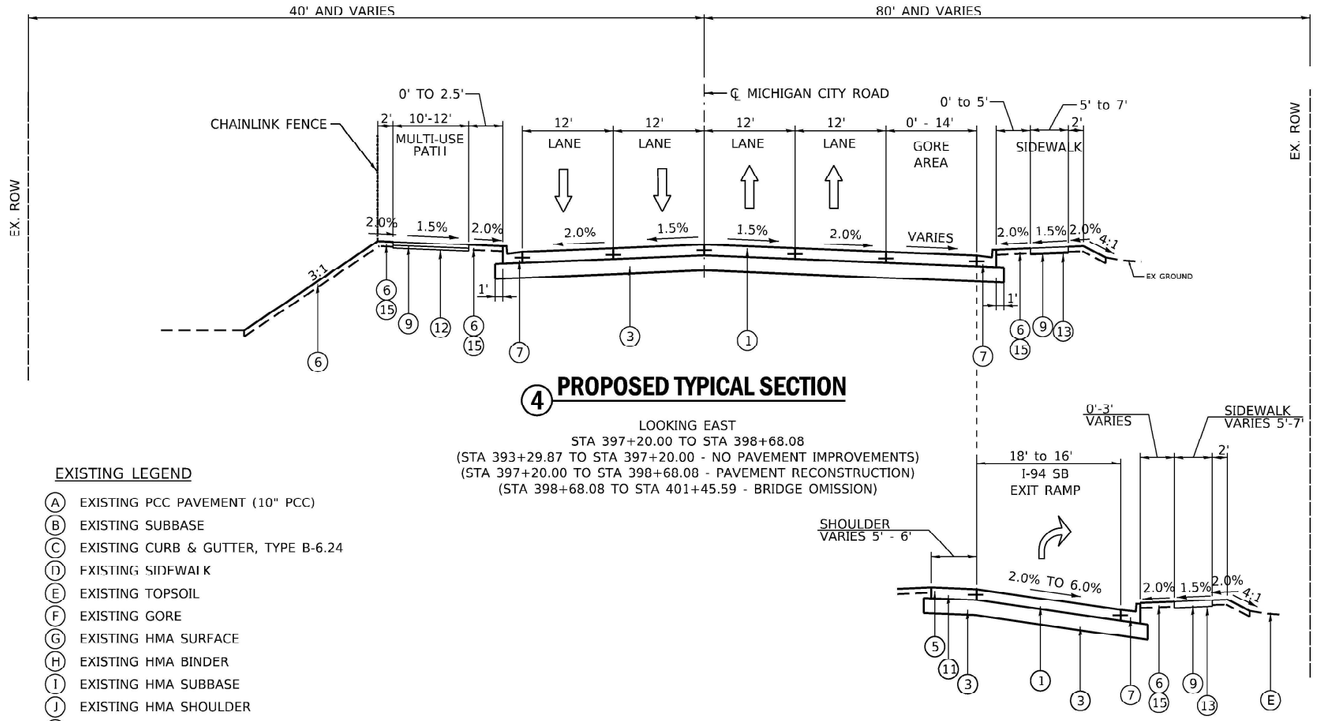

4 PROPOSED TYPICAL SECTION

LOOKING EAST
STA 397+20.00 TO STA 398+68.08
(STA 393+29.87 TO STA 397+20.00 - NO PAVEMENT IMPROVEMENTS)
(STA 397+20.00 TO STA 398+68.08 - PAVEMENT RECONSTRUCTION)
(STA 398+68.08 TO STA 401+45.59 - BRIDGE OMISSION)

I-94 SB ENTRANCE RAMP
STA 397+20.00 TO 397+83.03

EXISTING LEGEND

- (A) EXISTING PCC PAVEMENT (10" PCC)
- (B) EXISTING SUBBASE
- (C) EXISTING CURB & GUTTER, TYPE B-6.24
- (D) EXISTING SIDEWALK
- (E) EXISTING TOPSOIL
- (F) EXISTING GORE
- (G) EXISTING HMA SURFACE
- (H) EXISTING HMA BINDER
- (I) EXISTING HMA SUBBASE
- (J) EXISTING HMA SHOULDER
- (K) EXISTING AGGRAGATE BASE COURSE
- (L) FILLING EXISTING RUMBLE STRIP

PROPOSED LEGEND

1. PORTLAND CEMENT CONCRETE PAVEMENT 10" (JOINTED)
2. HOT-MIX ASPHALT SURFACE COURSE, IL-9.5, MIX "D", N70
3. AGGREGATE SUBGRADE IMPROVEMENT 12"
4. HOT-MIX ASPHALT BASE COURSE, 12 3/4"
5. CORRUGATED MEDIAN (DOWELLED)
6. TOPSOIL FURNISH AND PLACE, 4"
7. COMBINATION CONCRETE CURB AND GUTTER, TYPE B-6.24 (SPECIAL)
8. STEEL PLATE BEAM GUARDRAIL, TYPE A, 6 FOOT POSTS
9. PORTLAND CEMENT CONCRETE SIDEWALK 5 INCH
10. PORTLAND CEMENT CONCRETE DRIVEWAY PAVEMENT, 5 INCH
11. PORTLAND CEMENT CONCRETE SHOULDERS 10"
12. AGGREGATE BASE COURSE, TYPE B 4"
13. AGGREGATE BASE COURSE, TYPE B 2"
14. AGGREGATE SHOULDERS, TYPE B 6"
15. SEEDING (SEE EROSION CONTROL PLAN)
16. RUMBLE STRIP

HOT-MIX ASPHALT MIXTURE REQUIREMENTS		
MIXTURE TYPE	AIR VOIDS @NDES	QUALITY MANAGEMENT PROGRAM (QMP)
INTERSTATE 94: GORE, SHOULDER, AND MAINLINE PAVEMENT RESTORATION		
HOT-MIX ASPHALT SURFACE COURSE, IL-9.5, MIX "D", N70; 2"	4% @ 70 Gyr.	QC/QA
HOT-MIX ASPHALT BASE COURSE, 12 3/4" (HMA BINDER IL-19.0)	4% @ 90 Gyr.	QC/QA
INTERSTATE 94: FILLING EXISTING RUMBLE STRIPS		
HOT-MIX ASPHALT SURFACE COURSE, IL-9.5, MIX "D", N70; 2"	4% @ 70 Gyr.	QC/QA
DETOUR ROUTE: CLASS D PATCHES, TYPE (I & II) 10" (SPECIAL)		
HOT-MIX ASPHALT SURFACE COURSE, IL-9.5, MIX "D", N70; 2"	4% @ 70 Gyr.	QC/QA
HOT-MIX ASPHALT BINDER IL-19.0, 8"	4% @ 70 Gyr.	QC/QA

MIX TABLE NOTES:
1. THE "AC TYPE" FOR HMA SHALL BE "PG 64-22" UNLESS MODIFIED BY RECLAIMED MATERIALS SPECIFICATIONS.
2. THE UNIT WEIGHT USED TO CALCULATE ALL HMA SURFACE MIXTURE QUANTITIES IS 112 LBS/SQ YD/IN.

I-94 PAVEMENT DETAILS (GORE, SHOULDER AND MAINLINE)

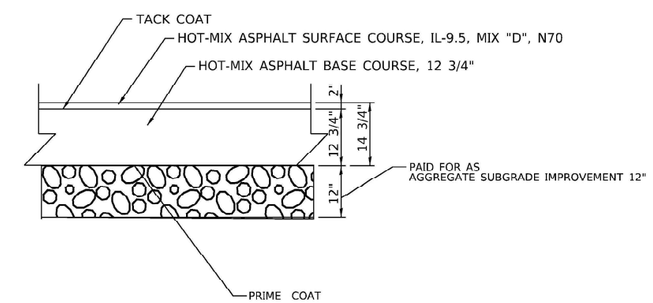

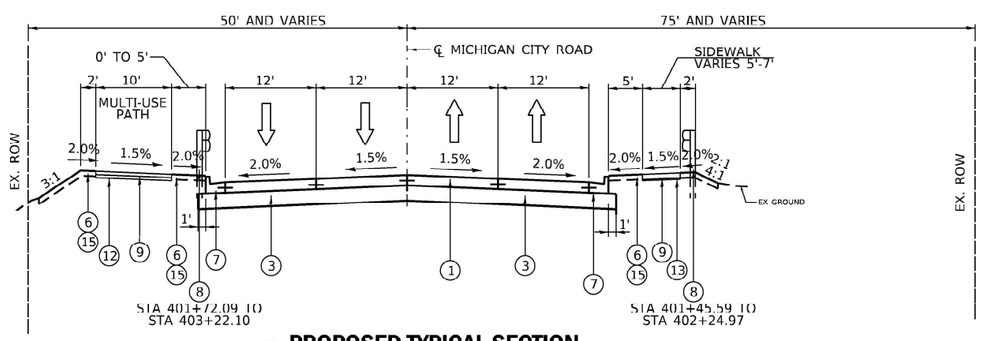

5 PROPOSED TYPICAL SECTION

LOOKING EAST
STA 401+45.59 TO STA 403+20.00
(STA 401+45.59 TO STA 403+20.00 - PAVEMENT RECONSTRUCTION)
(STA 403+20.00 TO STA 405+69.24 - NO PAVEMENT IMPROVEMENTS)

MODEL: $MODELNAME$
FILE NAME: \\CHICAGO2\gisnet\P220720 IDOT D1 PTB 204-001 Michigan City 3d Bridge\03A Design\C1 CADD\02 Sheet\Roadway\02-D162R62-sht-Typical 02.dgn

DELTA ENGINEERING GROUP, LLC
CONSULTING ENGINEERS, CONSTRUCTION MANAGERS, SURVEYORS
111 W JACKSON BLVD, SUITE 910
CHICAGO, IL 60604
T 312.377.7700, F 312.427 6145

USER NAME = denisb	DESIGNED - MA/DB	REVISED -
	DRAWN - DB	REVISED -
PLOT SCALE = 20.0000 ' / in.	CHECKED - MA	REVISED -
PLOT DATE = 12/13/2024	DATE - 12/13/2024	REVISED -

STATE OF ILLINOIS
DEPARTMENT OF TRANSPORTATION

MICHIGAN CITY ROAD OVER I-94
TYPICAL SECTION

SCALE: 1: 10 | SHEET 02 OF 03 SHEETS | STA. N/A | TO STA. N/A

F.A.I. RTE.	SECTION	COUNTY	TOTAL SHEETS	SHEET NO.
94	FAI 94 22 STRUCTURE 2	COOK	157	22
		CONTRACT NO. 62R62		
		ILLINOIS	FED. AID PROJECT	

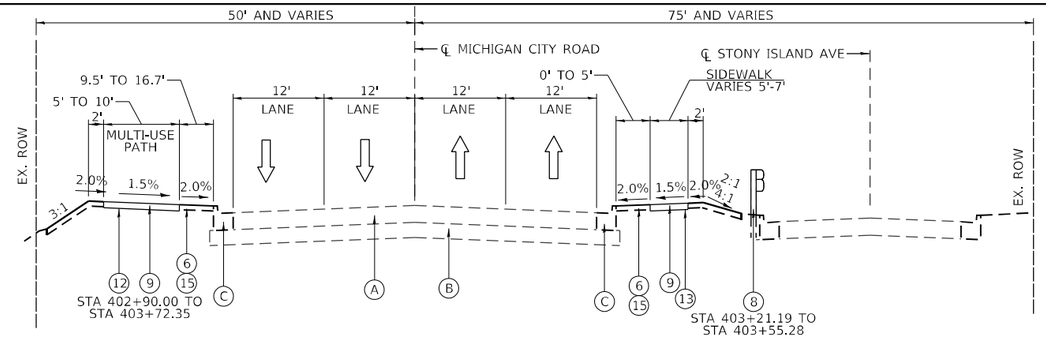

6 PROPOSED TYPICAL SECTION

LOOKING EAST
STA 403+20.00 TO STA 405+69.24

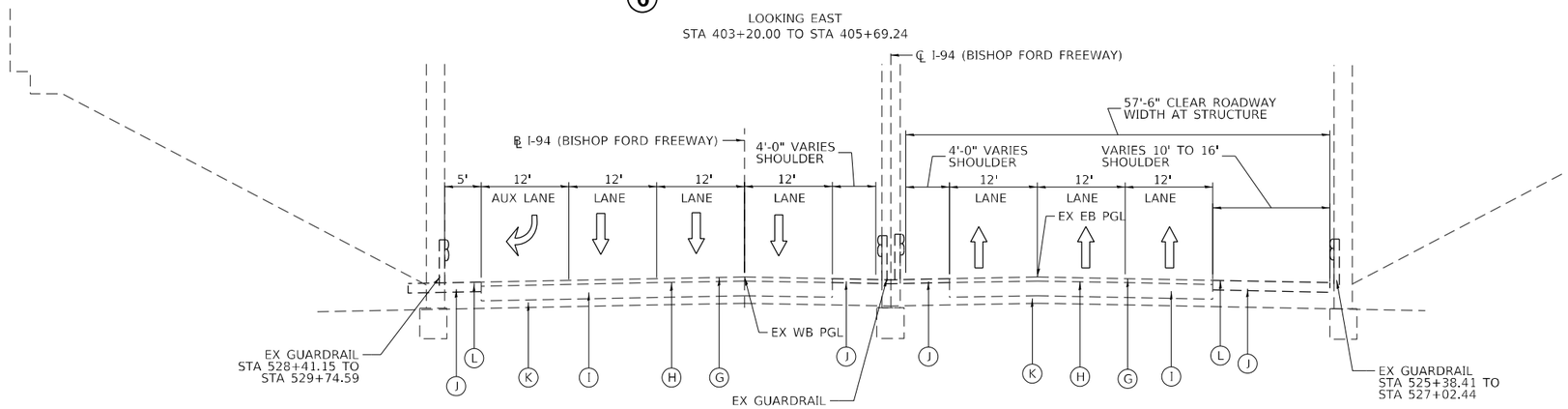

7 EXISTING TYPICAL SECTION

LOOKING SOUTH

STA 526+24.75 TO 549+31.91 (I-94 CENTERLINE)
STA 1526+24.75 TO STA 1549+31.91 (I-94 BASELINE EB)

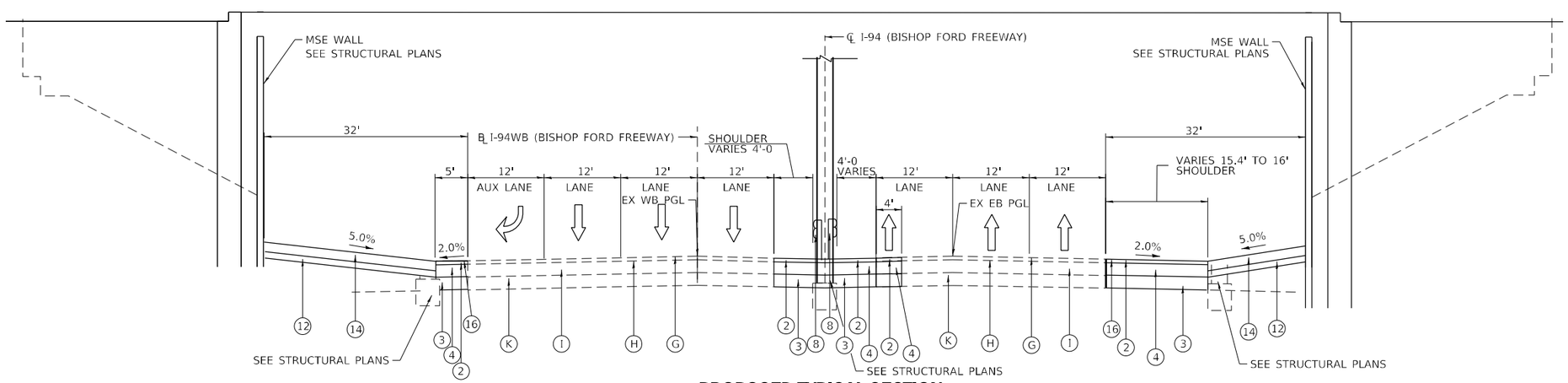

8 PROPOSED TYPICAL SECTION

LOOKING SOUTH

STA 526+24.75 TO 529+31.91 (I-94 CENTERLINE)
STA 1526+24.75 TO STA 1529+31.91 (I-94 BASELINE EB)

EXISTING LEGEND

- (A) EXISTING PCC PAVEMENT (10" PCC)
- (B) EXISTING SUBBASE
- (C) EXISTING CURB & GUTTER, TYPE B-6.24
- (D) EXISTING SIDEWALK
- (E) EXISTING TOPSOIL
- (F) EXISTING GORE
- (G) EXISTING HMA SURFACE
- (H) EXISTING HMA BINDER
- (I) EXISTING HMA SUBBASE
- (J) EXISTING HMA SHOULDER
- (K) EXISTING AGGRAGATE BASE COURSE
- (L) FILLING EXISTING RUMBLE STRIP

PROPOSED LEGEND

- (1) PORTLAND CEMENT CONCRETE PAVEMENT 10" (JOINTED)
- (2) HOT-MIX ASPHALT SURFACE COURSE, IL-9.5, MIX "D", N70
- (3) AGGREGATE SUBGRADE IMPROVEMENT 12"
- (4) HOT-MIX ASPHALT BASE COURSE, 12 3/4"
- (5) CORRUGATED MEDIAN (DOWELLED)
- (6) TOPSOIL FURNISH AND PLACE, 4"
- (7) COMBINATION CONCRETE CURB AND GUTTER, TYPE B-6.24 (SPECIAL)
- (8) STEEL PLATE BEAM GUARDRAIL, TYPE A, 6 FOOT POSTS
- (9) PORTLAND CEMENT CONCRETE SIDEWALK 5 INCH
- (10) PORTLAND CEMENT CONCRETE DRIVEWAY PAVEMENT, 5 INCH
- (11) PORTLAND CEMENT CONCRETE SHOULDERS 10"
- (12) AGGREGATE BASE COURSE, TYPE B 4"
- (13) AGGREGATE BASE COURSE, TYPE B 2"
- (14) AGGREGATE SHOULDERS, TYPE B 6"
- (15) SEEDING (SEE EROSION CONTROL PLAN)
- (16) RUMBLE STRIP

DELTA ENGINEERING GROUP, LLC
CONSULTING ENGINEERS, CONSTRUCTION MANAGERS, SURVEYORS
111 W JACKSON BLVD, SUITE 910
CHICAGO, IL 60604
T 312.377.7700, F 312.427 6145

USER NAME = denisb	DESIGNED - MA/DB	REVISED -	
	DRAWN - DB	REVISED -	
PLOT SCALE = 20.0000 ' / in.	CHECKED - MA	REVISED -	
PLOT DATE = 12/13/2024	DATE - 12/13/2024	REVISED -	

STATE OF ILLINOIS
DEPARTMENT OF TRANSPORTATION

MICHIGAN CITY ROAD OVER I-94
TYPICAL SECTION

SCALE: N/A | SHEET 03 OF 03 SHEETS | STA. N/A | TO STA. N/A

F.A.I. RTE.	SECTION	COUNTY	TOTAL SHEETS	SHEET NO.
94	FAI 94 22 STRUCTURE 2	COOK	157	23
		CONTRACT NO. 62R62		
		ILLINOIS	FED. AID PROJECT	

MODEL: S:\MODEL NAMES
FILE NAME: \\CHICAGO22\share\LP22070 IDOT D1 PTB 204-001 Michigan City Rd Bridge\03A Design\01 CADD\02 Sheet\Roadway\023-D162R62-sht-Typical 03.dgn

MAINTENANCE OF TRAFFIC NOTES

1. ALL CONFLICTING EXISTING PAVEMENT MARKINGS AND RAISED REFLECTIVE PAVEMENT MARKER REFLECTORS LOCATED WITHIN TEMPORARY LANE CLOSURE TAPERS, LANE SHIFT TAPERS OR IN LOCATIONS THAT CONFLICT THE TEMPORARY PAVEMENT MARKING FOR STAGING SHALL BE REMOVED. PAVEMENT MARKING REMOVAL SHALL BE COMPLETED WITH WATER BLASTING WITH VACUUM RECOVERY. THE EXISTING PAVEMENT MARKING AND RAISED REFLECTIVE MARKER REFLECTORS THAT WERE REMOVED SHALL BE RESTORED IN KIND AFTER THE COMPLETION OF THE STAGING.

2. THE CONTRACTOR SHALL CONTACT KALPANA KANNAN-HOSADURGA, THE DISTRICT ONE TRAFFIC CONTROL SUPERVISOR AT KALPANA KANNAN-HOSADURGA@ILLINOIS. A MINIMUM OF 72 HOURS IN ADVANCED OF BEGINNING OF WORK.

3. NIGHT TIME LANE CLOSURES AND FULL CLOSURE OF ONE DIRECTION OF TRAFFIC ON I-94 IS PERMITTED DURING THE ALLOWABLE HOURS SPECIFIED IN THE KEEPING EXPRESSWAYS OPEN TO TRAFFIC SPECIAL PROVISION AND AS APPROVED BY THE BUREAU OF TRAFFIC OPERATIONS.

4. CHANGEABLE MESSAGE SIGNS SHALL BE INSTALLED TWO WEEKS PRIOR TO ALL ROAD CLOSURE, TRAFFIC STAGE CHANGES, AND NEW TRAFFIC SIGNAL TURN-ON EVENTS ON EACH APPROACH OF THE EFFECTED ROADWAY TO WARN MOTORISTS OF THE UPCOMING EVENT. THE SIGNS SHALL BE REMOVED TWO WEEKS THEREAFTER UNLESS THE SIGNS ARE NEEDED AGAIN FOR A SUBSEQUENT FUTURE EVENT THAT WILL OCCUR WITHIN 2 WEEKS ON THE SAME APPROACH OF THE EFFECTED ROADWAY. THE SIGN LOCATIONS SHALL BE (DETERMINED BY THE ENGINEER) PLACED AS DIRECTED BY THE ENGINEER.

5. PAVEMENT MARKING TAPE, TYPE IV SHOWN ON THE PLANS FOR ANY CONSTRUCTION STAGE THAT THE CONTRACTOR PROPOSES TO EXTEND OVER THE WINTER PERIODS SHALL MEAN MODIFIED URETHANE PAVEMENT MARKING AND WILL BE PAID FOR THEIR RESPECTIVE CONTRACT UNIT PRICE.

6. DETOUR SIGNANGE SHALL BE CONSIDERED INCLUDED IN THE COST FOR TEMPORARY TRAFFIC CONTROL AND PROTECTION (SPECIAL) EXCEPT AS OTHERWISE NOTED.

7. TRAFFIC CONDITIONS, ACCIDENTS AND OTHER UNFORESEEN EMERGENCY CONDITIONS MAY REQUIRE THE ENGINEER TO RESTRICT, MODIFY, OR REMOVE LANE CLOSURES OR CHANNELIZATION SHOWN ON THE PLANS. THE CONTRACTOR SHALL MAKE THE NECESSARY ADJUSTMENTS AS DIRECTED BY THE ENGINEER TO ANY REQUEST MADE BY THE ENGINEER FOR CORRECTION, IMPROVEMENT OR MODIFICATION OF THE MAINTENANCE OF TRAFFIC CONTROL DEVICES.

8. DURING CONSTRUCTION OPERATIONS, THE CONTRACTOR SHALL TAKE NECESSARY PRECAUTIONS TO PROTECT ADJACENT TRAFFIC LANES, WHICH ARE OPEN TO TRAFFIC, FROM DEBRIS BEING BLOWN OR OTHERWISE REMOVED FROM THE CONSTRUCTION AREAS. THE CONTRACTOR SHALL ALSO BE RESPONSIBLE FOR KEEPING DEBRIS OFF OF THE ADJACENT TRAVELED LANE SURFACE.

9. A MINIMUM 1 FOOT SHY DISTANCE BETWEEN THE TEMPORARY CONCRETE BARRIER WALL AND THE OUTSIDE EDGE OF THE ADJACENT TEMPORARY PAVEMENT MARKING SHALL BE PROVIDED AT ALL LOCATIONS.

10. TEMPORARY CONCRETE BARRIER WALL SHALL BE PINNED WHEN WORK IS TO OCCUER WITHIN 24" BEHIND THE WALL. NO WORK SHALL OCCUER WITH 6" BEHIND THE BARRIER WALL. THIS WORK SHALL BE INCLUDED IN THE COST OF TEMPORARY CONCRETE BARRIER WALL.

11. THE CONTRACTOR SHALL COVER ALL EXISTING SIGNS WHICH CONFLICTS WITH TEMPORARY SIGNING. THIS WORK SHALL BE INCLUDED IN THE COST OF TRAFFIC CONTROL AND PROTECTION (SPECIAL).

12. THE CONTRACTOR SHALL REMOVE ALL EXISTING RUMBLE STRIPS ADJACENT TO PROPOSED LANE SHIFTS. THIS WORK SHALL BE PAID FOR AS FILLING EXISTING RUMBLE STRIP.

13. A QUANTITY OF CLASS D PATCHING (SPECIAL) HAS BEEN PROVIDED FOR PAVEMENT REPAIRS AS NEEDED ALONG THE PROPOSED DETOUR ROUTE FOR MICHIGAN CITY ROAD. PATCHING SHALL BE COMPLETED AT LOCATIONS AS DIRECTED BY THE ENGINEER.

14. TEMPORARY TRAFFIC SIGNAL TIMING SHALL BE PERFORMED AT THE FOLLOWING INTERSECTIONS:

    A. TS 3475 - IL 83 / SIBLEY BOULEVARD & LINCOLN AVENUE / MICHIGAN CITY ROAD
    B. TS 4482 - IL 83 / SIBLEY BOULEVARD & MADISON AVENUE
    C. TS 4480 - IL 83 / SIBLEY BOULEVARD & CLYDE AVENUE
    D. TS 4490 - IL 83 / SIBLEY BOULEVARD & YATES AVENUE
    E. TS 4500 - IL 83 / SIBLEY BOULEVARD & TORRENCE AVENUE/ IL 83
    F. TS 4495 - TORRENCE AVENUE / IL 83 & PULASKI ROAD
    G. TS 3480 - MICHIGAN CITY ROAD & TORRENCE AVENUE
    H. TS 4440 - PULASKI ROAD & MICHIGAN CITY ROAD

15. THE CONTRACTOR SHALL BE RESPONSIBLE FOR COORDINATING WORK AND TRAFFIC CONTROL WITH ADJACENT ACTIVE CONTRACTS. INCLUDING BUT NOT LIMITED TO CONTRACT 62W87. MODIFICATION OF THE WORK ZONE MAY BE NEEDED TO MATCH INTO THE LANE PLACEMENT OF THE ADJACENT CONTRACT(S) AND SHALL BE COMPLETED AS DIRECTED BY THE ENGINEER.

16. THE CONTRACTOR SHALL NOT OBSCURE EXISTING SIGNAGE DURING THE PLACEMENT OF THE DETOUR SIGNAGE.

17. TRAFFIC SHALL BE RESTORED TO THE EXISTING LANE CONFIGURATION FOR A WINTER SHUTDOWN PERIOD. PAVEMENT REMOVAL AND REPLACEMENT UNDER STAGED CONSTRUCTION WITH LONG TERM LANE CLOSURES AND/OR SHIFTS SHALL BE COMPLETED PRIOR TO ENTERING A WINTER SHUTDOWN PERIOD. A QUANTITY OF TEMPORARY PAVEMENT MARKING (PAINT) HAS BEEN PROVIDED TO RESTORE EXISTING PAVEMENT MARKING LOCATIONS PRIOR TO THE WINTER SHUTDOWN.

SEQUENCE OF CONSTRUCTION

PRE- STAGE

TRAFFIC:

I. I-94:
- a. TRAFFIC IN EXISTING LANE POSITIONS.
- b. TEMPORARY LANE AND/OR SHOULDER CLOSURES PER IDOT DISTRICT 1 STANDARD TC-17 AND IDOT STANDARDS 701401 & 701446.

CONSTRUCTION:

I. I-94:
- a. INSTALLATION OF ADVANCED SIGNING, PROTECTIVE SHIELD, TEMPORARY PAVEMENT MARKING, AND EROSION CONTROL.
- b. REMOVAL OF RUMBLE STRIPS AND REPAIR OF EXISTING PAVEMENT FOR FUTURE STAGED TRAFFIC.

STAGE 1

TRAFFIC:

I. I-94:
- a. TRAFFIC SHIFTED TO THE OUTER LANES WITH REDUCED LANE WIDTHS. THE INSIDE SHOULDER WILL BE CLOSED. WB AND EB TRAFFIC WILL BE MAINTAINED AT THREE LANES DURING PEAK TIMES.
- b. TEMPORARY LANE CLOSURES OF LANE 1 PER IDOT STANDARD 701401.
- c. ONE DIRECTION OF I-94 WILL BE CLOSED AT VARIOUS TIMES FOR A MAXIMUM OF 15 MINUTES DURING NIGHTTIME HOURS TO ALLOW FOR GIRDER DEMOLITION.

II. MICHIGAN CITY ROAD:
- a. FULL CLOSURE WITH TRAFFIC DETOURED.

III. I-94 WESTBOUND RAMP TO EASTBOUND SIBLEY BOULEVARD:
- a. FULL CLOSURE WITH TRAFFIC DETOURED.

IV. I-94 WESTBOUND RAMP TO EASTBOUND SIBLEY BOULEVARD:
- a. LONG TERM RAMP WIDTH REDUCTION PER IDOT DISTRICT 1 STANDARD TC-17.

CONSTRUCTION:

I. I-94:
- a. ROADWAY RESTORATION OF THE INSIDE SHOULDER AND MEDIAN AREA.

II. MICHIGAN CITY ROAD:
- a. DEMOLITION OF EXISTING SUPER STRUCTURE AND PIER 2 (MIDDLE PIER).
- b. CONSTRUCTION OF THE PROPOSED MIDDLE PIER.

STAGE 2A

TRAFFIC:

I. I-94:
- a. LONG TERM CLOSURE OF EB LANE 1.
- b. TRAFFIC SHIFTED TO THE INNER LANES WITH REDUCED LANE WIDTHS. THE OUTSIDE SHOULDERS WILL BE CLOSED. WB AND EB TRAFFIC WILL BE MAINITAINED AT THREE LANES.
- c. ONE DIRECTION OF I-94 WILL BE CLOSED AT VARIOUS TIMES FOR A MAXIMUM OF 15 MINUTES DURING NIGHTTIME HOURS FOR SUPERSTRUCTURE AND STEEL GIRDER ERECTION.

II. I-94 WESTBOUND RAMP TO EASTBOUND SIBLEY BOULEVARD:
- a. FULL CLOSURE WITH TRAFFIC DETOURED.

III. I-94 WESTBOUND RAMP TO EASTBOUND SIBLEY BOULEVARD:
- a. LONG TERM RAMP WIDTH REDUCTION PER IDOT DISTRICT 1 STANDARD TC-17.

IV. MICHIGAN CITY ROAD:
- a. FULL CLOSURE WITH TRAFFIC DETOURED.

CONSTRUCTION:

I. I-94:
- a. ROADWAY RESTORATION OF THE OUTSIDE SHOULDER AND ROADSIDE AREA.
- b. PAVEMENT MARKING TO REMAIN FOR STAGE 2B.

II. MICHIGAN CITY ROAD:
- a. DEMOLITION OF APPROACH SLABS, PIER 1, PIER 3, AND BRIDGE ABUTMENTS.
- b. COMPLETION OF THE EAST AND WEST BRIDGE ABUTMENT AND RETAINING WALLS.
- c. ERECTION OF PROPOSED GIRDERS AND CONSTRUCTION OF THE SUPERSTRUCTURE.

STAGE 2B

TRAFFIC:

I. I-94:
- a. REMAIN IN SAME LAYOUT AS STAGE 2A. EASTBOUND TAPERS TO BE MODIFIED TO MATCH STAGE CHANGE FOR CONTRACT 62W87.

CONSTRUCTION:

I. I-94:
- a. CONTINUE WORK FROM STAGE 2A.

STAGE 3

TRAFFIC:

I. I-94:
- a. TRAFFIC IN EXISTING LANE POSITION.
- b. TEMPORARY LANE AND/OR SHOULDER CLOSURES PER IDOT DISTRICT 1 STANDARD TC-17 AND IDOT STANDARDS 701401 & 701446.

II. MICHIGAN CITY ROAD:
- a. TEMPORARY LANE CLOSURE ON MICHIGAN CITY ROAD PER IDOT STANDARD 701606.

III. EASTBOUND SIBLEY BOULEVARD TO EASTBOUND I-94 ENTRANCE RAMP:
- a. TEMPORARY FULL RAMP CLOSURE PER IDOT DISTRICT 1 STANDARD TC-08.
- b. TEMPORARY PARTIAL RAMP CLOSURE PER IDOT DISTICT 1 STANDARD TC-17.

CONSTRUCTION:

I. I-94
- a. INSTALLATION OF FINAL PAVEMENT MARKING AND RUMBLE STRIPS.

II. MICHIGAN CITY ROAD:
- a. COMPLETION OF THE RETAINING WALL AND ROADWAY IMPROVEMENTS.
- b. REMOVAL OF TEMPORARY EROSION CONTROL AND DETOUR SIGNING.
- c. INSTALLATION OF LANDSCAPING, PERMANENT SIGNING, RUMBLE STRIOS AND PAVEMENT MARKING.

V3 Companies
7325 Janes Avenue
Woodridge, IL 60517
630.724.9200 phone
630.724.9202 fax
www.v3co.com

USER NAME = amuro	DESIGNED - AM	REVISED -
	DRAWN - DRP	REVISED -
PLOT SCALE = 2'	CHECKED - JWB	REVISED -
PLOT DATE = 3/3/2025	DATE - 3/3/2025	REVISED -

STATE OF ILLINOIS
DEPARTMENT OF TRANSPORTATION

MAINTENANCE OF TRAFFIC GENERAL NOTES AND SEQUENCE OF CONSTRUCTION

SCALE: N.T.S. | SHEET 1 OF 1 SHEETS | STA. TO STA.

F.A.U. RTE.	SECTION	COUNTY	TOTAL SHEETS	SHEET NO.
3593	0606(2HB)R-86	COOK	157	24
		CONTRACT NO. 62R62		
	ILLINOIS	FED. AID PROJECT		

MODEL: Default
FILE NAME: N:\2023\23072\Drawings\Main\CADD_Sheets\D162R62-sht-MOT-notes01.dgn

TEMPORARY PAVEMENT MARKING - LINE 4" PAINT					
ROAD	STATION FROM	LT /RT	STATION TO	LT /RT	LENGTH (FEET)
STAGE 1					
EB I-94	513+36	57.0' RT	518+43	40.1' RT	521
EB I-94	523+10	42.9' RT	534+80	42.5' RT	1,170
EB I-94	521+69	6.5' RT	536+38	6.3' RT	1,469
WB I-94	521+68	43.1' LT	535+32	43.1' LT	1,365
WB I-94	519+75	6.3' LT	535+31	6.6' LT	1,556
WINTER STAGE					
OVERALL					3,148
STAGE 2A					
EB I-94	491+73.90	8.9' RT	535+52.54	19.6' RT	4,381
EB I-94	511+64.34	42.1' RT	518+60.18	29.0' RT	696
EB I-94	523+04.59	29.0' RT	526+05.51	42.8' RT	1,301
WB I-94	527+08.15	40.8' LT	534+67.67	43.2' LT	757
STAGE 2B					
EB I-94	529+39.07	28.0' RT	530+31.97	30.1' RT	93
EB I 94	529+39.30	6.0' RT	529+78.02	6.9' RT	39
TOTAL					16,496

TEMPORARY PAVEMENT MARKING - LINE 5" PAINT					
ROAD	STATION FROM	LT /RT	STATION TO	LT /RT	LENGTH (FEET)
STAGE 1					
EB I-94	522+15	18.6' RT	535+68	18.7' RT	399
EB I-94	523+67	18.8' RT	529+00	18.1' RT	318
WB I-94	526+91	30.1' LT	534+50	30.9' LT	366
WB I-94	527+68	19.0' LT	533+68	18.7' LT	335
WINTER STAGE					
OVERALL					3,428
STAGE 2A					
EB I-94	512+07.67	30.1' RT	535+62.12	30.8' RT	589
WB I-94	525+40.64	30.2' LT	534+11.59	30.9' LT	422
STAGE 2B					
EB I-94	529+39.30	17.0' RT	529+93.24	18.2' RT	14
TOTAL					5,871

TEMPORARY PAVEMENT MARKING - LINE 6" PAINT					
ROAD	STATION FROM	LT /RT	STATION TO	LT /RT	LENGTH (FEET)
STAGE 1					
EB I-94	518+43	40.1' RT	523+12	41.7' RT	155
WINTER STAGE					
OVERALL					417
STAGE 2A					
EB I-94	518+60	29.0' RT	523+05	29.0' RT	147
TOTAL					719

TEMPORARY PAVEMENT MARKING - LINE 8" PAINT				
ROAD	STATION FROM	STATION TO	LT /RT	LENGTH (FEET)
WINTER STAGE				
OVERALL				1605
STAGE 2				
EB I-94	517+98	518+60	29.0' RT	71
EB I-94	523+05	523+96	29.0' RT	105
TOTAL				1,781

TEMPORARY PAVEMENT MARKING - LINE 8" TYPE IV TAPE		
STAGES	ROAD	LENGTH (FEET)
1	MICHIGAN RD	1258
2	MICHIGAN RD	1113
TOTAL		2,371

TEMPORARY CONCRETE BARRIER				
ROAD	STATION FROM	STATION TO	LT /RT	LENGTH (FEET)
STAGE 1				
EB I-94	525+74	529+73	RT	400
WB I-94	526+50	531+32	LT	488
STAGE 2A				
EB I-94	524+07	529+36	RT	106
WB I-94	525+41	531+00	LT	106

RELOCATE TEMPORARY CONCRETE BARRIER				
ROAD	STATION FROM	STATION TO	LT /RT	LENGTH (FEET)
STAGE 2A				
EB I-94	524+07	529+36	RT	488
WB I-94	525+41	531+00	LT	400
TOTAL				888

IMPACT ATTENUATORS, TEMPORARY (FULLY REDIRECTIVE, NARROW), TEST LEVEL 3						
ROAD	STATION FROM	STATION TO	LT /RT	LENGTH (FEET)	DESCRIPTION	QUANTITY (EACH)
STAGE 1						
EB I-94	523+96	524+07	52.0' RT	40	Temp Imp Atten	1
WB I-94	530+99	531+10	50.0' LT	40	Temp Imp Atten	1
TOTAL						2

IMPACT ATTENUATORS, RELOCATE (FULLY REDIRECTIVE, NARROW), TEST LEVEL 3						
ROAD	STATION FROM	STATION TO	LT /RT	LENGTH (FEET)	DESCRIPTION	QUANTITY (EACH)
STAGE 2A						
EB I-94	524+96	525+07	38.1' RT	40	Temp Imp Atten	1
WB I-94	531+10	531+50	39.0' RT	40	Temp Imp Atten	1
TOTAL						2

TEMPORARY PAVEMENT MARKING REMOVAL - WATER BLASTING					
ROAD	STATION FROM	LT /RT	STATION TO	LT /RT	AREA (SQ FT)
STAGE 1					
EB I-94	513+36	57.0' RT	518+43	40.1' RT	174
EB I-94	523+10	42.9' RT	534+80	42.5' RT	390
EB I-94	518+43	40.1' RT	523+12	41.7' RT	78
EB I-94	521+69	6.5' RT	536+38	6.3' RT	490
EB I-94	522+15	18.6' RT	535+68	18.7' RT	166
EB I-94	523+67	18.8' RT	529+00	18.1' RT	133
WB I-94	526+91	30.1' LT	534+50	30.9' LT	153
WB I-94	521+68	43.1' LT	535+32	43.1' LT	455
WB I-94	519+75	6.3' LT	535+31	6.6' LT	519
WB I-94	527+68	18.0' LT	533+68	18.7' LT	140
STAGE 2A					
EB I-94	529+37.95	28.0' RT	536+05.51	42.8' RT	357
EB I-94	529+38.08	17.0' RT	535+62.12	30.8' RT	253
STAGE 2B					
EB I-94	529+37.95	28.0' RT	536+05.51	42.8' RT	7
EB I-94	529+38.08	17.0' RT	535+62.12	30.8' RT	7
EB I-94	529+39.07	28.0' RT	530+31.97	30.1' RT	13
EB I-94	529+39.30	6.0' RT	529+78.02	6.9' RT	31
EB I-94	491+73.90	8.9' RT	535+52.54	19.6' RT	1460
EB I-94	511+64.34	42.1' RT	518+60.18	29.0' RT	232
EB I-94	523+04.59	29.0' RT	526+05.51	42.8' RT	434
WB I-94	527+08.15	40.8' LT	534+67.67	43.2' LT	252
EB I-94	529+39.30	17.0' RT	529+93.24	18.2' RT	22
WB I-94	525+40.64	33.3' LT	534+11.59	30.9' LT	981
EB I-94	511+07.67	30.1' RT	535+62.12	30.8' RT	744
EB I-94	518+60	29.0' RT	523+05	29.0' RT	74
TOTAL					7,565

FILLING EXISTING RUMBLE STRIP				
ROAD	STATION FROM	STATION TO	LT /RT	LENGTH (FEET)
PRESTAGE				
EB I-94	513+36	517+96	RIGHT SHLDR	460
EB I-94	523+95	531+07	RIGHT SHLDR	712
WB I-94	524+22	526+67	RIGHT SHLDR	245
TOTAL				1,417

MODEL: Default
FILE NAME: N:\2023\23072\Drawings\Mstn\CADD_Sheets\L162R62-sht-MOTsch01.sgn

V3 Companies
7325 Janes Avenue
Woodridge, IL 60517
630.724.9200 phone
630.724.9202 fax
www.v3co.com

USER NAME = amuro	DESIGNED - AM	REVISED -
	DRAWN - DRP	REVISED -
PLOT SCALE = 2'	CHECKED - JWB	REVISED -
PLOT DATE = 3/3/2025	DATE - 3/3/2025	REVISED -

STATE OF ILLINOIS
DEPARTMENT OF TRANSPORTATION

MAINTENANCE OF TRAFFIC
SCHEDULE OF QUANTITIES

SCALE: N.T.S. | SHEET 1 OF 1 SHEETS | STA. TO STA.

F.A.U. RTE.	SECTION	COUNTY	TOTAL SHEETS	SHEET NO.
3593	0606(2HB)R-86	COOK	157	25
		CONTRACT NO. 62R62		
	ILLINOIS	FED. AID PROJECT		

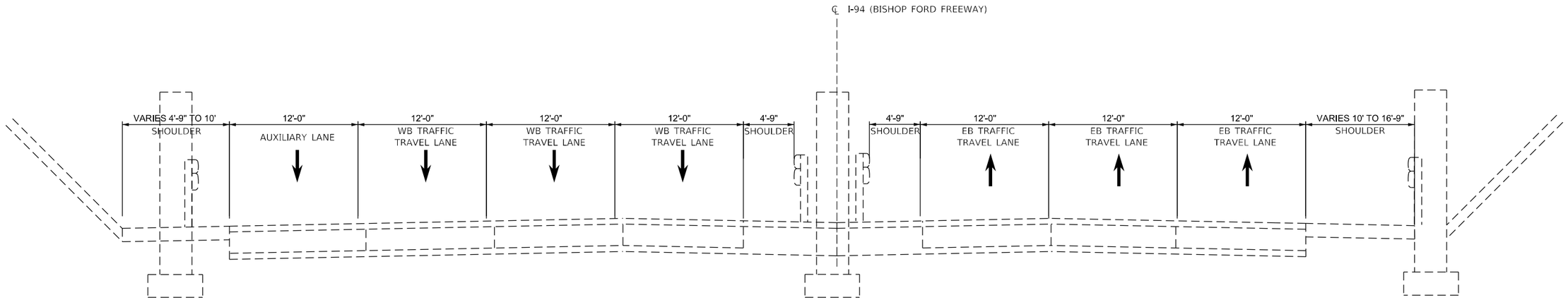

EXISTING - TYPICAL SECTION

LOOKING SOUTH
I-94 UNDER MICHIGAN CITY ROAD

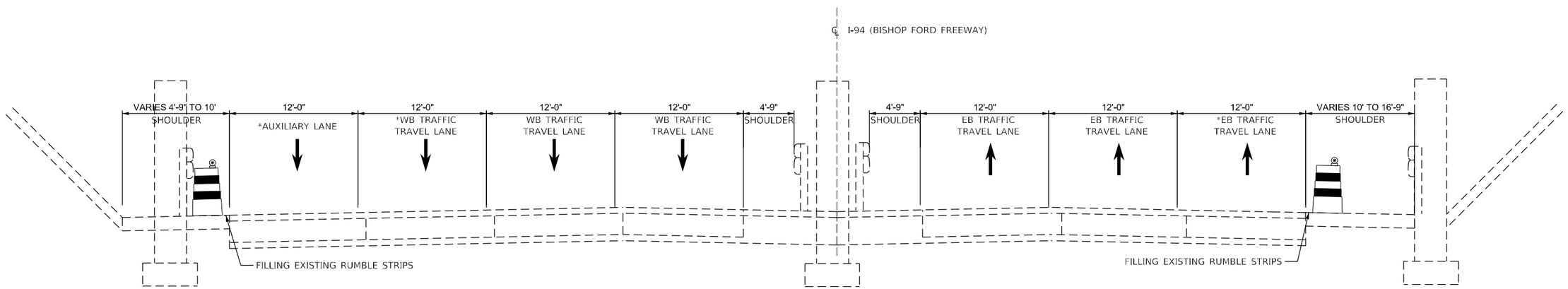

PRE STAGE - TYPICAL SECTION

LOOKING SOUTH
I-94 UNDER MICHIGAN CITY ROAD

MOT TRAFFIC CONTROL DEVICES

1. PAVEMENT MARKING PAINT - 4" WHITE SOLID LINE
2. PAVEMENT MARKING PAINT - 4" YELLOW SOLID LINE
3. PAVEMENT MARKING PAINT - 5" WHITE SKIP DASH LINE 10'-30'

A. EXISTING PAVEMENT MARKING TO REMAIN

MOT SYMBOL LEGEND

DIRECTION OF TRAFFIC

STAGE PAVEMENT WORK AREA

TYPE II BARRICADES OR DRUMS WITH STEADY BURNING LIGHTS AT 50 FT CENTERS AND 25 FT SPACING ON TAPERS

* LANE CLOSED WITH TEMPORARY CLOSURES DURING ALLOWABLE HOURS.

MODEL: Default
FILE NAME: N:\2023\23072-H\Drawings\Main\CADD_Sheets\D162R62-sh-MOTtyp01.dgn

V3 Companies
7325 Janes Avenue
Woodridge, IL 60517
630.724.9200 phone
630.724.9202 fax
www.v3co.com

USER NAME = amuro	DESIGNED - AM	REVISED -
	DRAWN - DRP	REVISED -
PLOT SCALE = 10'	CHECKED - JWB	REVISED -
PLOT DATE = 3/3/2025	DATE - 3/3/2025	REVISED -

STATE OF ILLINOIS
DEPARTMENT OF TRANSPORTATION

MAINTENANCE OF TRAFFIC TYPICAL SECTIONS

SCALE: N.T.S. | SHEET 1 OF 2 SHEETS | STA. TO STA.

F.A.U. RTE.	SECTION	COUNTY	TOTAL SHEETS	SHEET NO.
3593	0606(2HB)R-86	COOK	157	26

CONTRACT NO. 62R62

ILLINOIS | FED. AID PROJECT

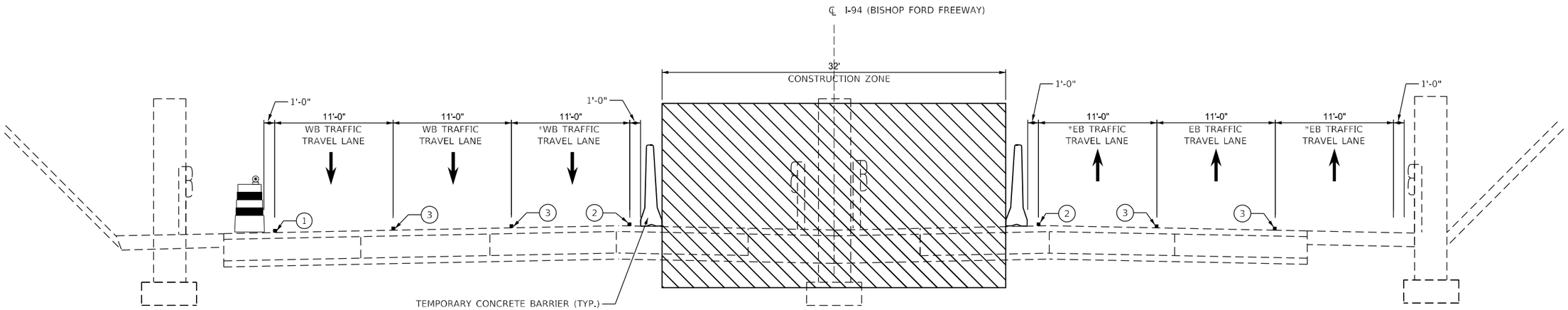

MOT STAGE 1 - TYPICAL SECTION

LOOKING SOUTH
I-94 UNDER MICHIGAN CITY ROAD

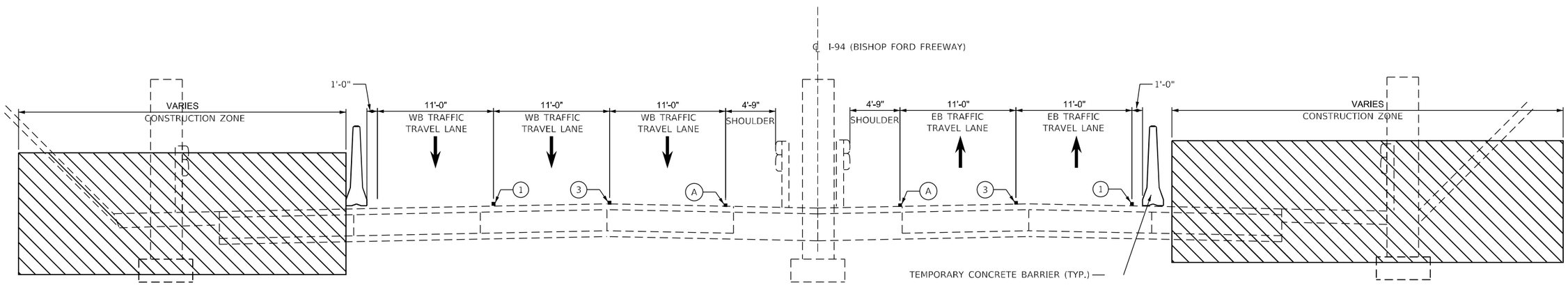

MOT STAGE 2A/2B - TYPICAL SECTION

LOOKING SOUTH
I-94 UNDER MICHIGAN CITY ROAD

MOT TRAFFIC CONTROL DEVICES

1. PAVEMENT MARKING PAINT - 4" WHITE SOLID LINE
2. PAVEMENT MARKING PAINT - 4" YELLOW SOLID LINE
3. PAVEMENT MARKING PAINT - 5" WHITE SKIP DASH LINE 10'-30'

(A) EXISTING PAVEMENT MARKING TO REMAIN

MOT SYMBOL LEGEND

DIRECTION OF TRAFFIC

STAGE PAVEMENT WORK AREA

TYPE II BARRICADES OR DRUMS WITH STEADY BURNING LIGHTS AT 50 FT CENTERS AND 25 FT SPACING ON TAPERS

* LANE CLOSED WITH TEMPORARY CLOSURES DURING ALLOWABLE HOURS.

MODEL: Default
FILE NAME: N:\2023\23072\D\Drawings\Mstn\CADD_Sheets\D162R62-sh-MOTtyp01.dgn

V3 Companies
7325 Janes Avenue
Woodridge, IL 60517
630.724.9200 phone
630.724.9202 fax
www.v3co.com

USER NAME = amuro	DESIGNED - AM	REVISED -
	DRAWN - DRP	REVISED -
PLOT SCALE = 10'	CHECKED - JWB	REVISED -
PLOT DATE = 3/3/2025	DATE - 3/3/2025	REVISED -

STATE OF ILLINOIS
DEPARTMENT OF TRANSPORTATION

MAINTENANCE OF TRAFFIC TYPICAL SECTIONS

SCALE: N.T.S. | SHEET 2 OF 2 SHEETS | STA. TO STA.

F.A.U. RTE.	SECTION	COUNTY	TOTAL SHEETS	SHEET NO.
3593	0606(2HB)R-86	COOK	157	27
		CONTRACT NO. 62R62		
		ILLINOIS	FED. AID PROJECT	

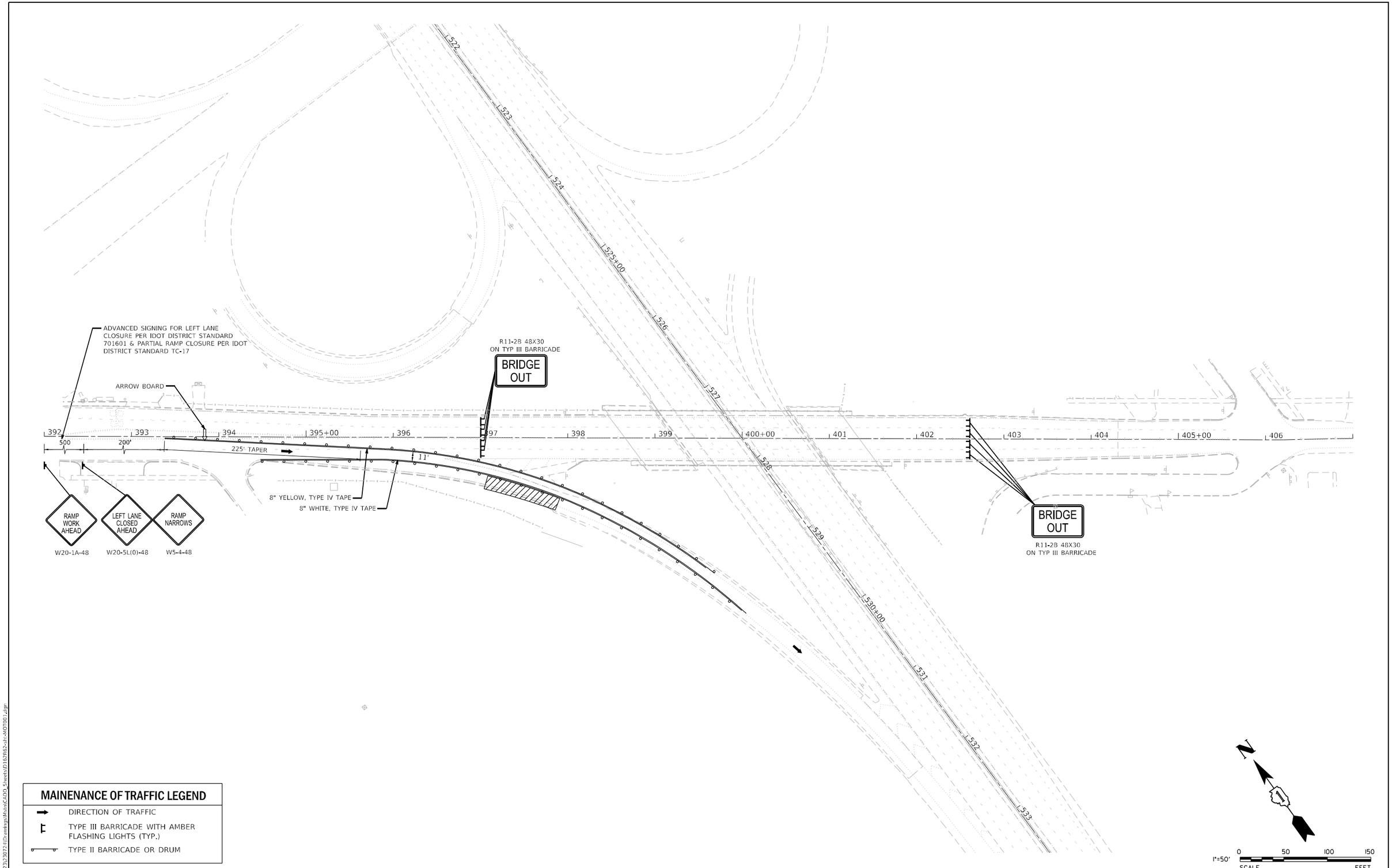

MAINENANCE OF TRAFFIC LEGEND

- DIRECTION OF TRAFFIC
- TYPE III BARRICADE WITH AMBER FLASHING LIGHTS (TYP.)
- TYPE II BARRICADE OR DRUM

MODEL: Default
FILE NAME: N:\2023\23072410\Drawings\Msts\CADD_Sheets\D162R62-sht-MOT001.dgn

V3 Companies
7325 Janes Avenue
Woodridge, IL 60517
630.724.9200 phone
630.724.9202 fax
www.v3co.com

USER NAME = amuro	DESIGNED - AM	REVISED -
	DRAWN - DRP	REVISED -
PLOT SCALE = 100'	CHECKED - JWB	REVISED -
PLOT DATE = 3/3/2025	DATE - 3/3/2025	REVISED -

STATE OF ILLINOIS
DEPARTMENT OF TRANSPORTATION

MAINTENANCE OF TRAFFIC PLAN - MICHIGAN CITY ROAD
STAGE 1

SCALE: 1"=50' | SHEET 1 OF 1 SHEETS | STA. 392+00.00 TO STA. 407+00.00

F.A.U. RTE.	SECTION	COUNTY	TOTAL SHEETS	SHEET NO.
3593	0606(2HB)R-86	COOK	157	28
		CONTRACT NO. 62R62		
	ILLINOIS	FED. AID PROJECT		

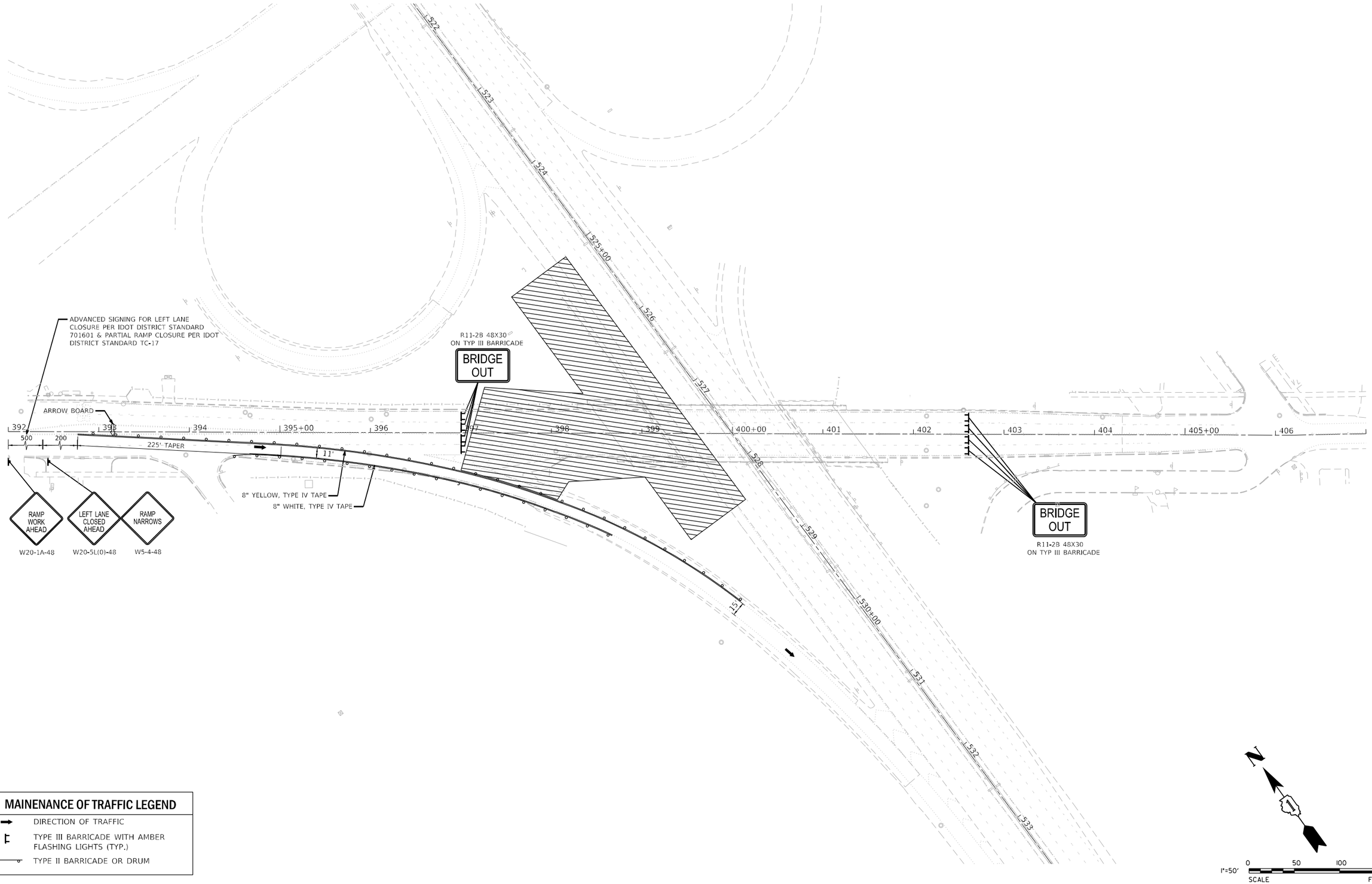

MAINENANCE OF TRAFFIC LEGEND

- DIRECTION OF TRAFFIC
- TYPE III BARRICADE WITH AMBER FLASHING LIGHTS (TYP.)
- TYPE II BARRICADE OR DRUM

MODEL: Default
FILE NAME: N:\2023\230724\Drawings\Main\CADD_Sheets\D162R62-sht-MOT002.dgn

V3 Companies
7325 Janes Avenue
Woodridge, IL 60517
630.724.9200 phone
630.724.9202 fax
www.v3co.com

USER NAME = amuro	DESIGNED - AM	REVISED -
	DRAWN - DRP	REVISED -
PLOT SCALE = 100'	CHECKED - JWB	REVISED -
PLOT DATE = 3/3/2025	DATE - 3/3/2025	REVISED -

STATE OF ILLINOIS
DEPARTMENT OF TRANSPORTATION

MAINTENANCE OF TRAFFIC PLAN - MICHIGAN CITY ROAD
STAGE 2

SCALE: 1"=50' | SHEET 1 OF 1 SHEETS | STA. 392+00.00 TO STA. 407+00.00

F.A.U. RTE.	SECTION	COUNTY	TOTAL SHEETS	SHEET NO.
3593	0606(2HB)R-86	COOK	157	28A
		CONTRACT NO. 62R62		
	ILLINOIS	FED. AID PROJECT		

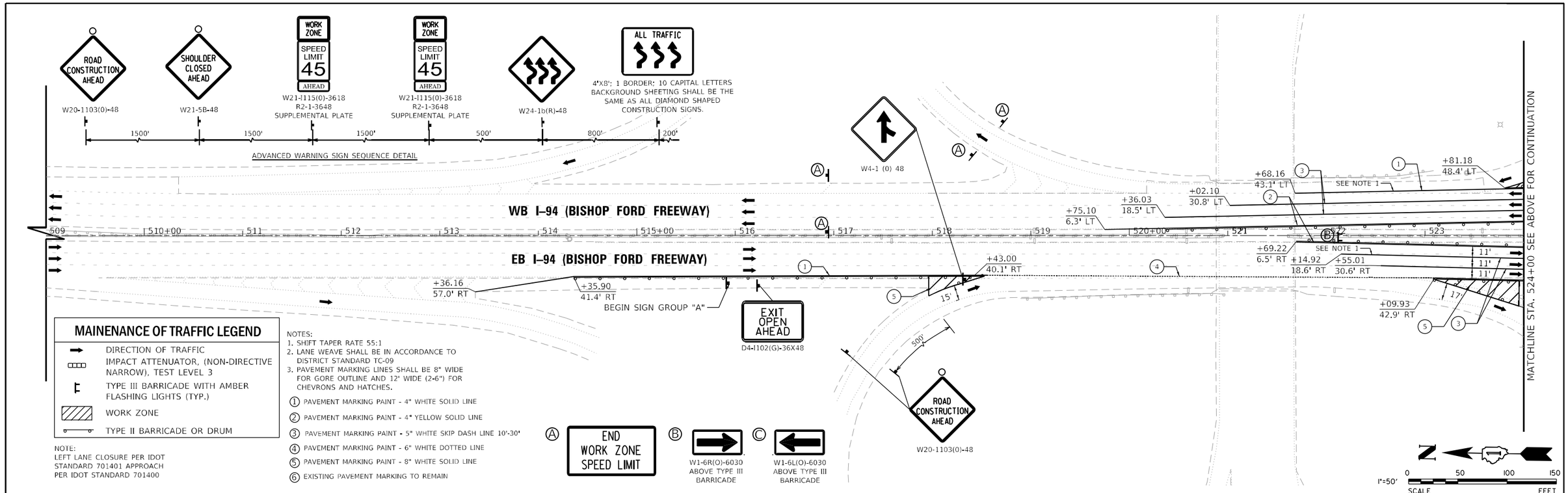

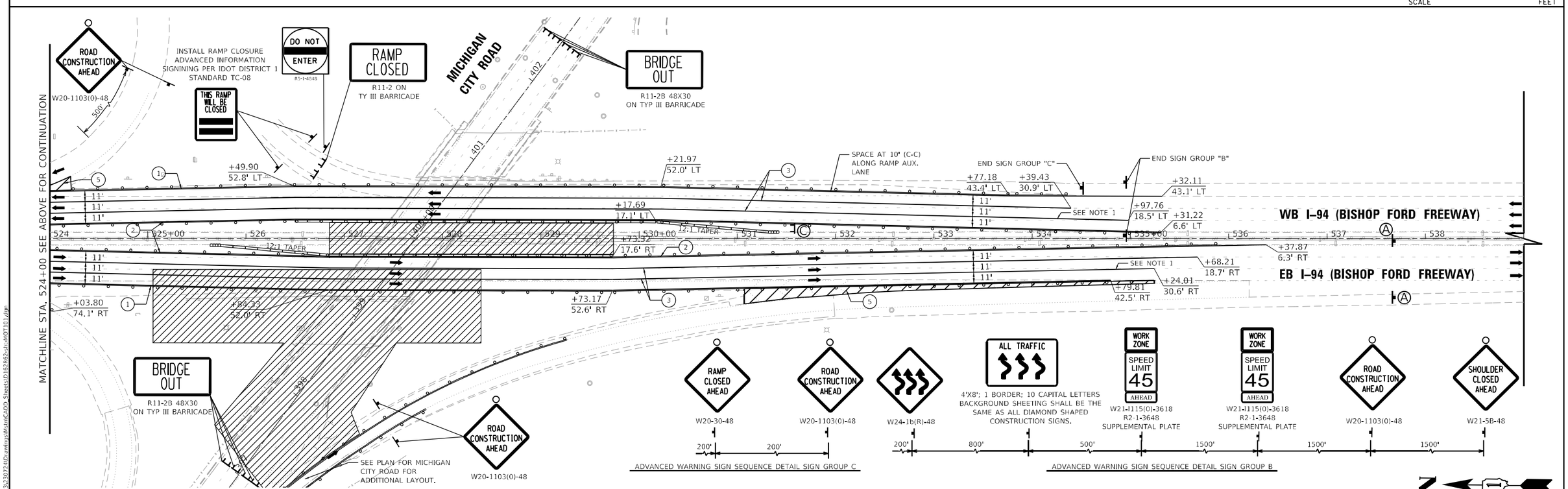

MODEL: Default
FILE NAME: N:\2023\23072\0\Drawings\Maint\CADD_Sheets\D162R62-sht-MOT101.dgn

V3 Companies
7325 Janes Avenue
Woodridge, IL 60517
630.724.9200 phone
630.724.9202 fax
www.v3co.com

USER NAME = amuro	DESIGNED - AM	REVISED -	
	DRAWN - DRP	REVISED -	
PLOT SCALE = 100'	CHECKED - JWB	REVISED -	
PLOT DATE = 3/3/2025	DATE - 3/3/2025	REVISED -	

STATE OF ILLINOIS
DEPARTMENT OF TRANSPORTATION

MAINTENANCE OF TRAFFIC - I-94 STAGE 1

SCALE: 1"=50' | SHEET 1 OF 2 SHEETS | STA. 509+00.00 TO STA. 539+00.00

F.A.U. RTE.	SECTION	COUNTY	TOTAL SHEETS	SHEET NO.
3593	0606(2HB)R-86	COOK	154	29
		CONTRACT NO. 62R62		
		ILLINOIS	FED. AID PROJECT	

MAINENANCE OF TRAFFIC LEGEND

- DIRECTION OF TRAFFIC
- IMPACT ATTENUATOR, (NON-DIRECTIVE NARROW), TEST LEVEL 3
- TYPE III BARRICADE WITH AMBER FLASHING LIGHTS (TYP.)
- WORK ZONE
- TYPE II BARRICADE OR DRUM

NOTES:
1. SEE IDOT DISTRICT 1 STANDARD TC-09 FOR ADDITIONAL DETAILS FOR LANE WEAVE.
2. PAVEMENT MARKING LINES SHALL BE 8" WIDE FOR GORE OUTLINE AND 12' WIDE (2-6") FOR CHEVRONS AND HATCHES.

NOTE:
LEFT LANE CLOSURE PER IDOT STANDARD 701401 APPROACH PER IDOT STANDARD 701400

1. PAVEMENT MARKING PAINT - 4" WHITE SOLID LINE
2. PAVEMENT MARKING PAINT - 4" YELLOW SOLID LINE
3. PAVEMENT MARKING PAINT - 5" WHITE SKIP DASH LINE 10'-30'
4. PAVEMENT MARKING PAINT - 6" WHITE DOTTED LINE
5. PAVEMENT MARKING PAINT - 8" WHITE SOLID LINE
6. EXISTING PAVEMENT MARKING TO REMAIN

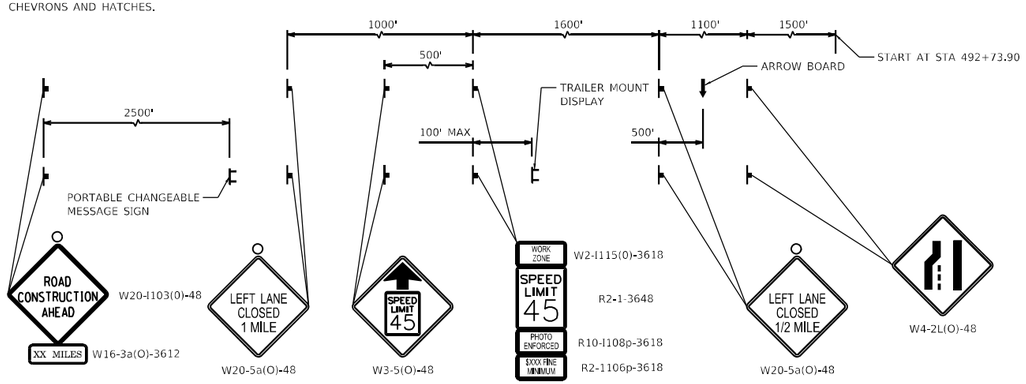

APPROACH TO LANE CLOSURE DETAIL (IDOT STANDARD 701400-12)

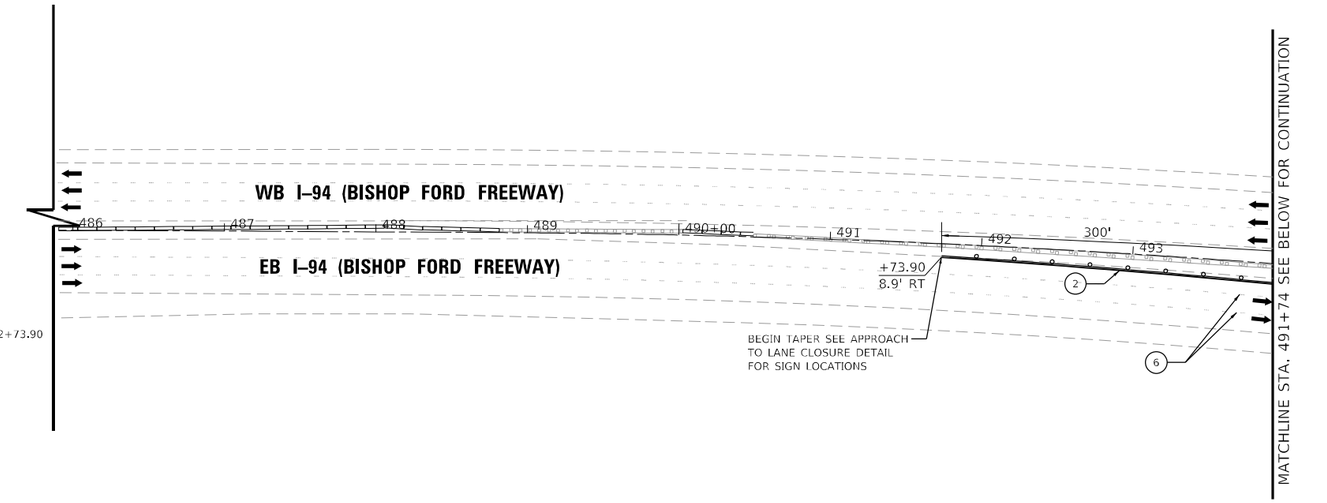

0 50 100 150
1"=50'
SCALE FEET

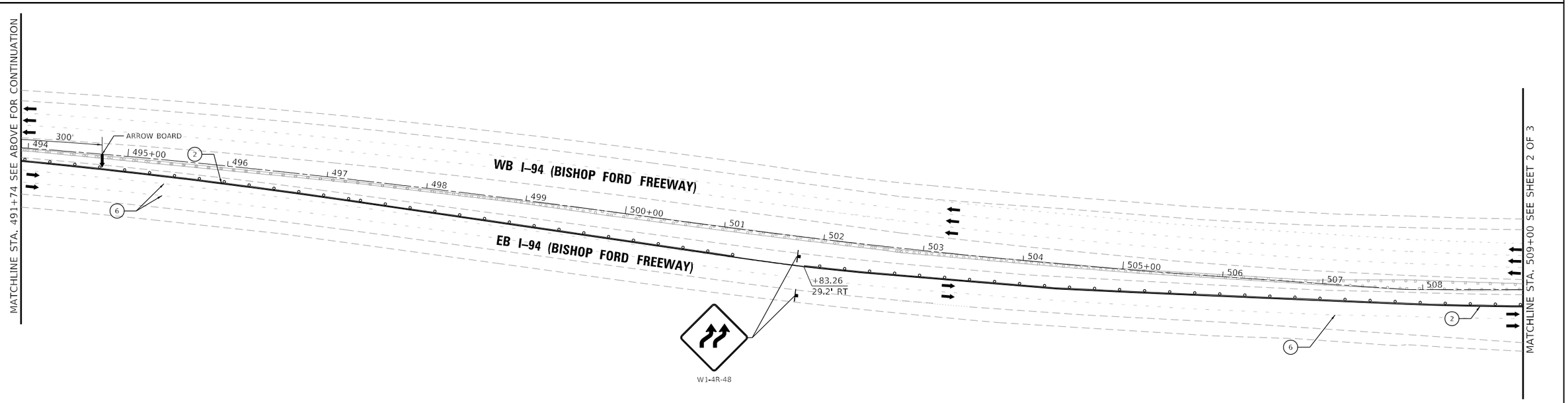

V3 Companies
7325 Janes Avenue
Woodridge, IL 60517
630.724.9200 phone
630.724.9202 fax
www.v3co.com

USER NAME = amuro	DESIGNED - AM	REVISED -
	DRAWN - DRP	REVISED -
PLOT SCALE = 100'	CHECKED - JWB	REVISED -
PLOT DATE = 3/3/2025	DATE - 3/3/2025	REVISED -

STATE OF ILLINOIS
DEPARTMENT OF TRANSPORTATION

MAINTENANCE OF TRAFFIC - I-94 STAGE 2A

SCALE: 1"=50' | SHEET 1 OF 2 SHEETS | STA. 491+73.90 TO STA. 509+00.00

F.A.U. RTE.	SECTION	COUNTY	TOTAL SHEETS	SHEET NO.
3593	0606(2HB)R-86	COOK	157	30
		CONTRACT NO. 62R62		
	ILLINOIS	FED. AID PROJECT		

MODEL: Default
FILE NAME: N:\2023\23072\Drawings\Main\CADD_Sheets\D162R62-sht-MOT201.dgn

MAINENANCE OF TRAFFIC LEGEND

- DIRECTION OF TRAFFIC
- IMPACT ATTENUATOR, (NON-DIRECTIVE NARROW), TEST LEVEL 3
- TYPE III BARRICADE WITH AMBER FLASHING LIGHTS (TYP.)
- WORK ZONE
- TYPE II BARRICADE OR DRUM

NOTES:
1. SEE IDOT DISTRICT 1 STANDARD TC-09 FOR ADDITIONAL DETAILS FOR LANE WEAVE.
2. PAVEMENT MARKING LINES SHALL BE 8" WIDE FOR GORE OUTLINE AND 12" WIDE (2-6") FOR CHEVRONS AND HATCHES.

1. PAVEMENT MARKING PAINT - 4" WHITE SOLID LINE
2. PAVEMENT MARKING PAINT - 4" YELLOW SOLID LINE
3. PAVEMENT MARKING PAINT - 5" WHITE SKIP DASH LINE 10'-30'
4. PAVEMENT MARKING PAINT - 6" WHITE DOTTED LINE
5. PAVEMENT MARKING PAINT - 8" WHITE SOLID LINE
6. EXISTING PAVEMENT MARKING TO REMAIN

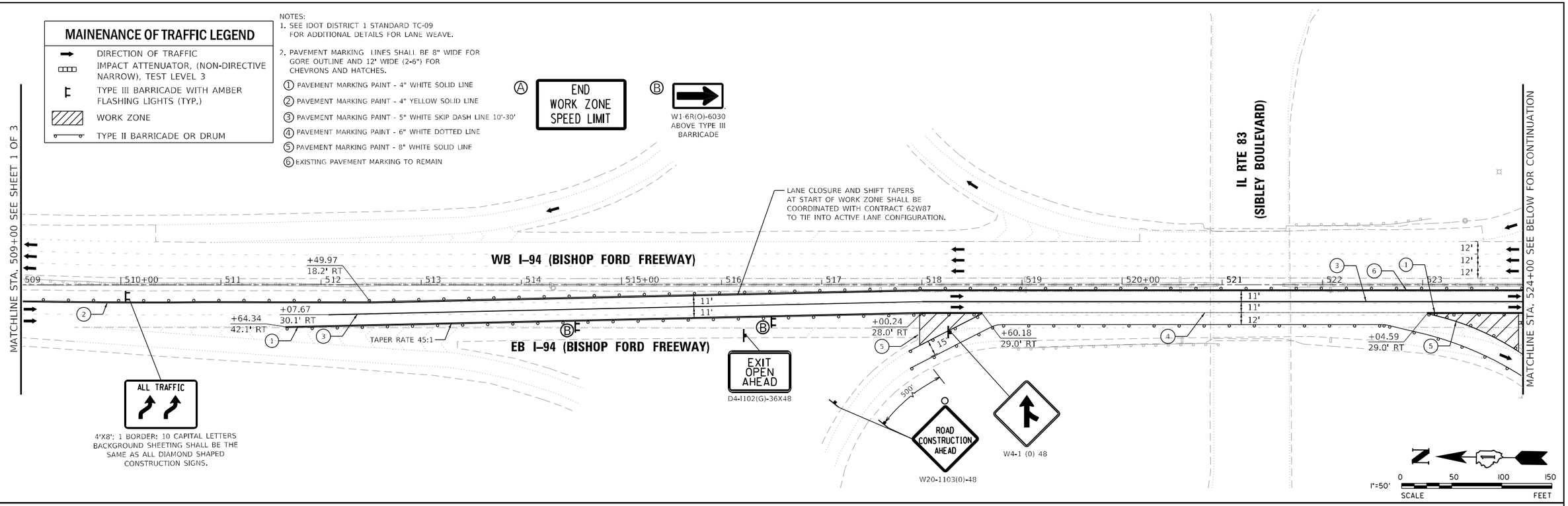

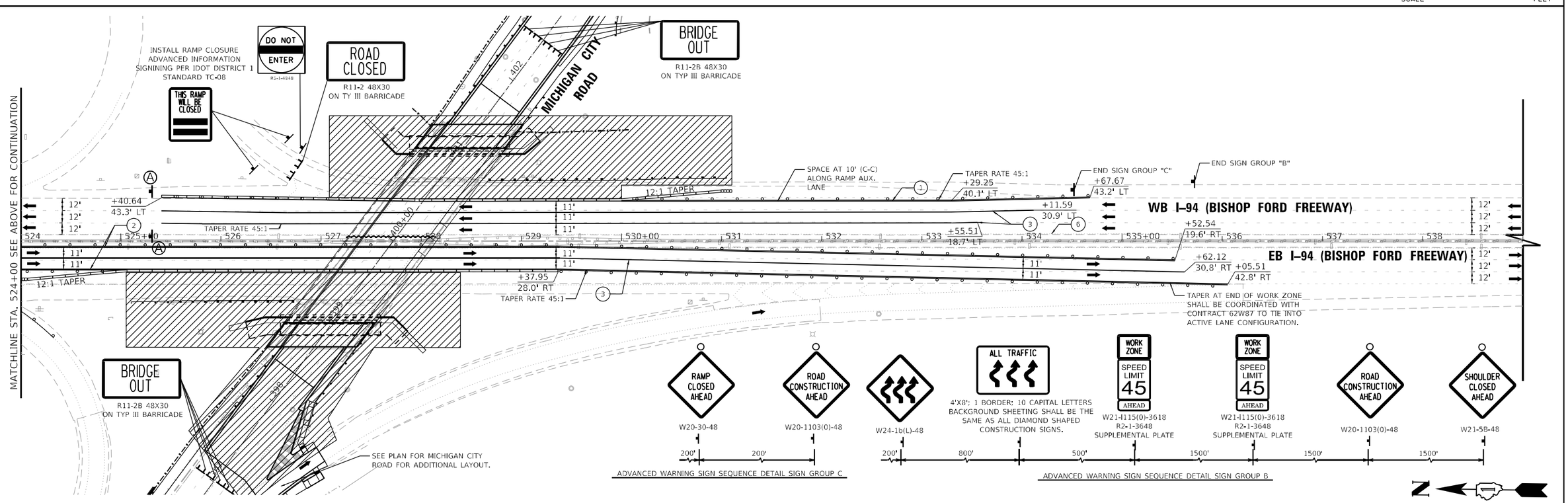

V3 Companies
7325 Janes Avenue
Woodridge, IL 60517
630.724.9200 phone
630.724.9202 fax
www.v3co.com

USER NAME = amuro	DESIGNED - AM	REVISED -
	DRAWN - DRP	REVISED -
PLOT SCALE = 100'	CHECKED - JWB	REVISED -
PLOT DATE = 3/3/2025	DATE - 3/3/2025	REVISED -

STATE OF ILLINOIS
DEPARTMENT OF TRANSPORTATION

MAINTENANCE OF TRAFFIC - I-94 STAGE 2A

SCALE: 1"=50' | SHEET 2 OF 2 SHEETS | STA. 509+00.00 TO STA. 539+00.00

F.A.U. RTE.	SECTION	COUNTY	TOTAL SHEETS	SHEET NO.
3593	0606(2HB)R-86	COOK	157	31
		CONTRACT NO. 62R62		
	ILLINOIS	FED. AID PROJECT		

MODEL: Default
FILE NAME: N:\2023\23072\Drawings\Main\CADD_Sheets\D162R62-sht-MOT202.dgn

MAINENANCE OF TRAFFIC LEGEND

- DIRECTION OF TRAFFIC
- IMPACT ATTENUATOR, (NON-DIRECTIVE NARROW), TEST LEVEL 3
- TYPE III BARRICADE WITH AMBER FLASHING LIGHTS (TYP.)
- WORK ZONE
- TYPE II BARRICADE OR DRUM

NOTES:
1. SEE IDOT DISTRICT 1 STANDARD TC-09 FOR ADDITIONAL DETAILS FOR LANE WEAVE.
2. PAVEMENT MARKING LINES SHALL BE 8" WIDE FOR GORE OUTLINE AND 12' WIDE (2-6") FOR CHEVRONS AND HATCHES.

NOTE:
LEFT LANE CLOSURE PER IDOT STANDARD 701401 APPROACH PER IDOT STANDARD 701400

1. PAVEMENT MARKING PAINT - 4" WHITE SOLID LINE
2. PAVEMENT MARKING PAINT - 4" YELLOW SOLID LINE
3. PAVEMENT MARKING PAINT - 5" WHITE SKIP DASH LINE 10'-30'
4. PAVEMENT MARKING PAINT - 6" WHITE DOTTED LINE
5. PAVEMENT MARKING PAINT - 8" WHITE SOLID LINE
6. EXISTING PAVEMENT MARKING TO REMAIN

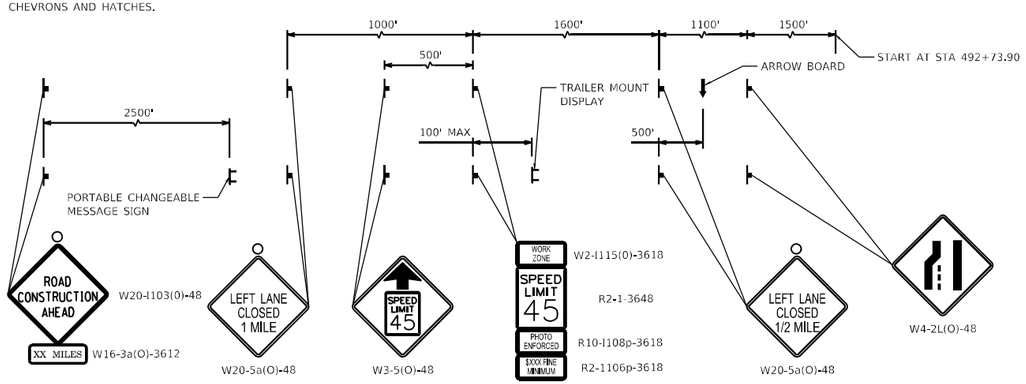

APPROACH TO LANE CLOSURE DETAIL (IDOT STANDARD 701400-12)

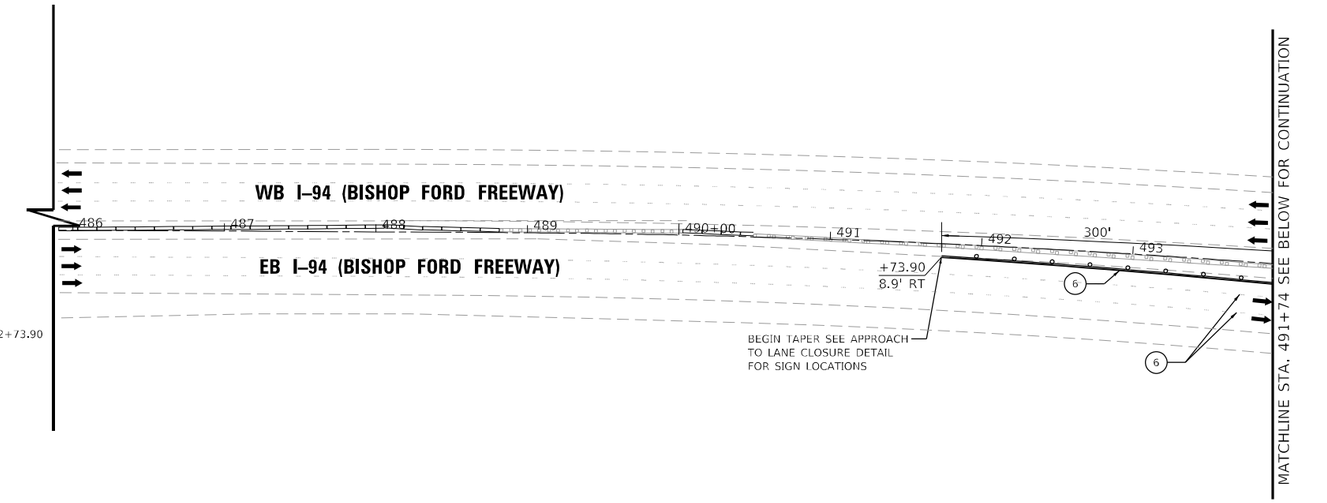

0 50 100 150
1"=50'
SCALE FEET

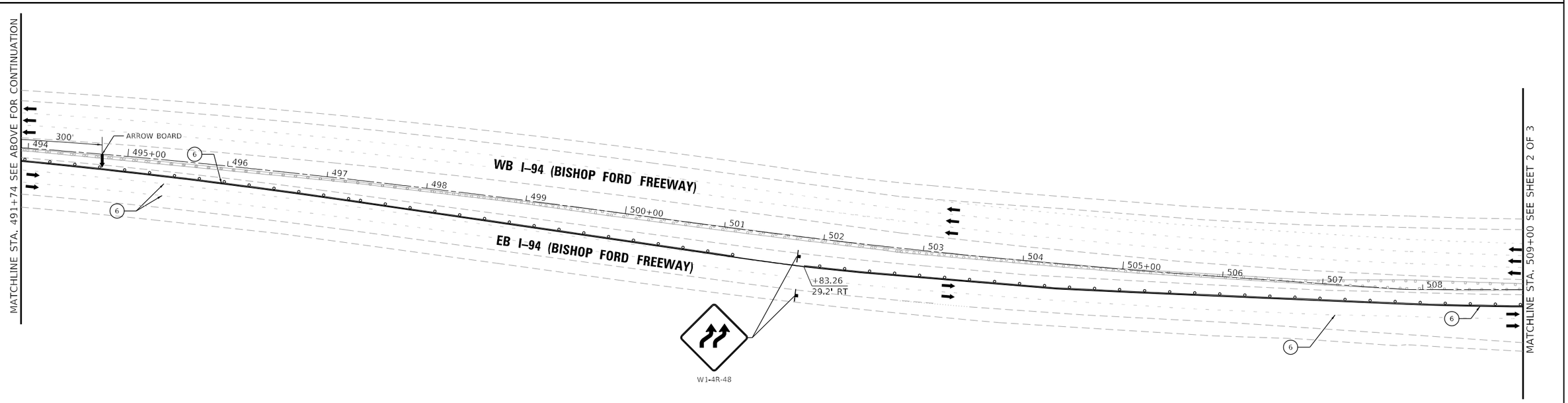

V3 Companies
7325 Janes Avenue
Woodridge, IL 60517
630.724.9200 phone
630.724.9202 fax
www.v3co.com

USER NAME = amuro	DESIGNED - AM	REVISED -	
	DRAWN - DRP	REVISED -	
PLOT SCALE = 100.0000 ' / in.	CHECKED - JWB	REVISED -	
PLOT DATE = 3/3/2025	DATE - 3/3/2025	REVISED -	

STATE OF ILLINOIS
DEPARTMENT OF TRANSPORTATION

MAINTENANCE OF TRAFFIC - I-94 STAGE 2B

SCALE: 1"=50' | SHEET 1 OF 2 SHEETS | STA. 491+73.90 TO STA. 509+00.00

F.A.U. RTE.	SECTION	COUNTY	TOTAL SHEETS	SHEET NO.
3593	0606(2HB)R-86	COOK	157	32

CONTRACT NO. 62R62

ILLINOIS | FED. AID PROJECT

MODEL: Default
FILE NAME: N:\2023\23072\1\Drawings\Main\CADD_Sheets\D162R62-sht-MOT203.dgn

MAINENANCE OF TRAFFIC LEGEND

- DIRECTION OF TRAFFIC
- IMPACT ATTENUATOR, (NON-DIRECTIVE NARROW), TEST LEVEL 3
- TYPE III BARRICADE WITH AMBER FLASHING LIGHTS (TYP.)
- WORK ZONE
- TYPE II BARRICADE OR DRUM

NOTES:
1. SEE IDOT DISTRICT 1 STANDARD TC-09 FOR ADDITIONAL DETAILS FOR LANE WEAVE.
2. PAVEMENT MARKING LINES SHALL BE 8" WIDE FOR GORE OUTLINE AND 12" WIDE (2-6") FOR CHEVRONS AND HATCHES.

1. PAVEMENT MARKING PAINT - 4" WHITE SOLID LINE
2. PAVEMENT MARKING PAINT - 4" YELLOW SOLID LINE
3. PAVEMENT MARKING PAINT - 5" WHITE SKIP DASH LINE 10'-30'
4. PAVEMENT MARKING PAINT - 6" WHITE DOTTED LINE
5. PAVEMENT MARKING PAINT - 8" WHITE SOLID LINE
6. EXISTING PAVEMENT MARKING TO REMAIN

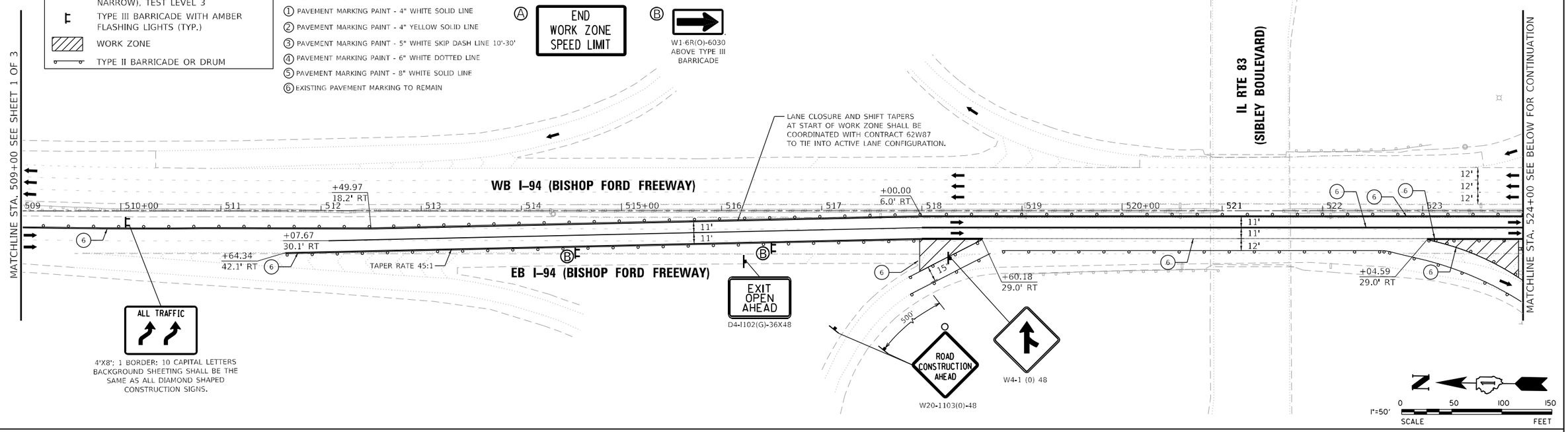

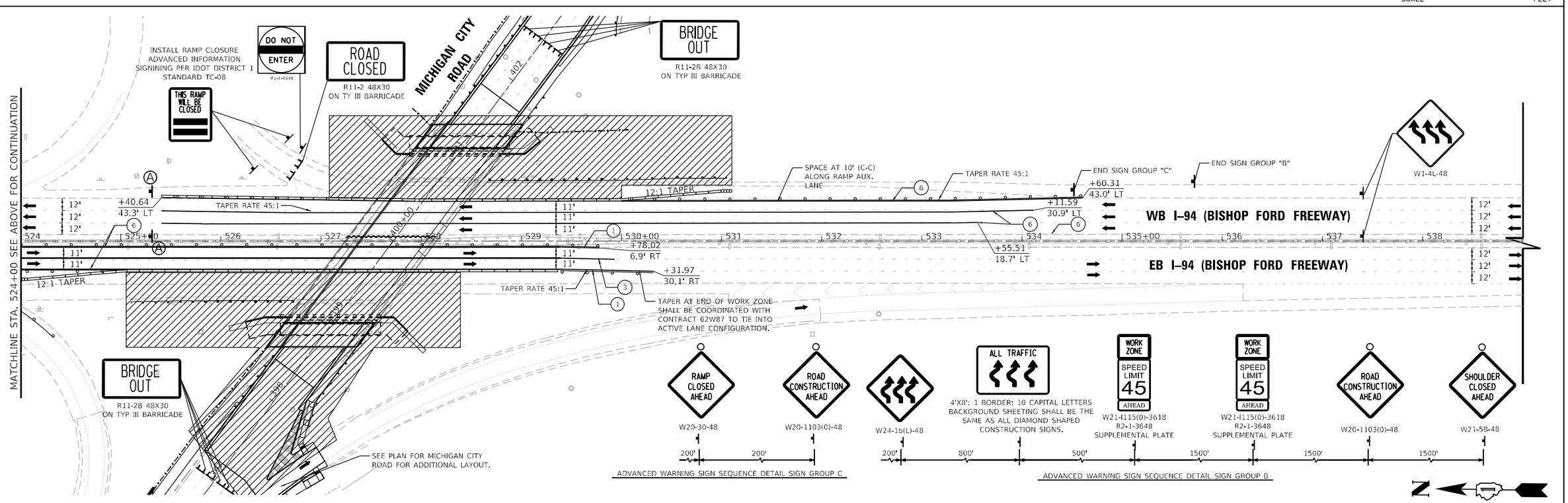

V3 Companies
7325 Janes Avenue
Woodridge, IL 60517
630.724.9200 phone
630.724.9202 fax
www.v3co.com

USER NAME = amuro	DESIGNED - AM	REVISED -
	DRAWN - DRP	REVISED -
PLOT SCALE = 100.0000 ' / in.	CHECKED - JWB	REVISED -
PLOT DATE = 3/3/2025	DATE - 3/3/2025	REVISED -

STATE OF ILLINOIS
DEPARTMENT OF TRANSPORTATION

MAINTENANCE OF TRAFFIC - I-94 STAGE 2B

SCALE: 1"=50' | SHEET 2 OF 2 SHEETS | STA. 509+00.00 TO STA. 539+00.00

F.A.U. RTE.	SECTION	COUNTY	TOTAL SHEETS	SHEET NO.
3593	0606(2HB)R-86	COOK	157	33
		CONTRACT NO. 62R62		
		ILLINOIS	FED. AID PROJECT	

MODEL: Default
FILE NAME: N:\2023\23072\Drawings\Main\CADD_Sheets\D162R62-sht-MOT204.dgn

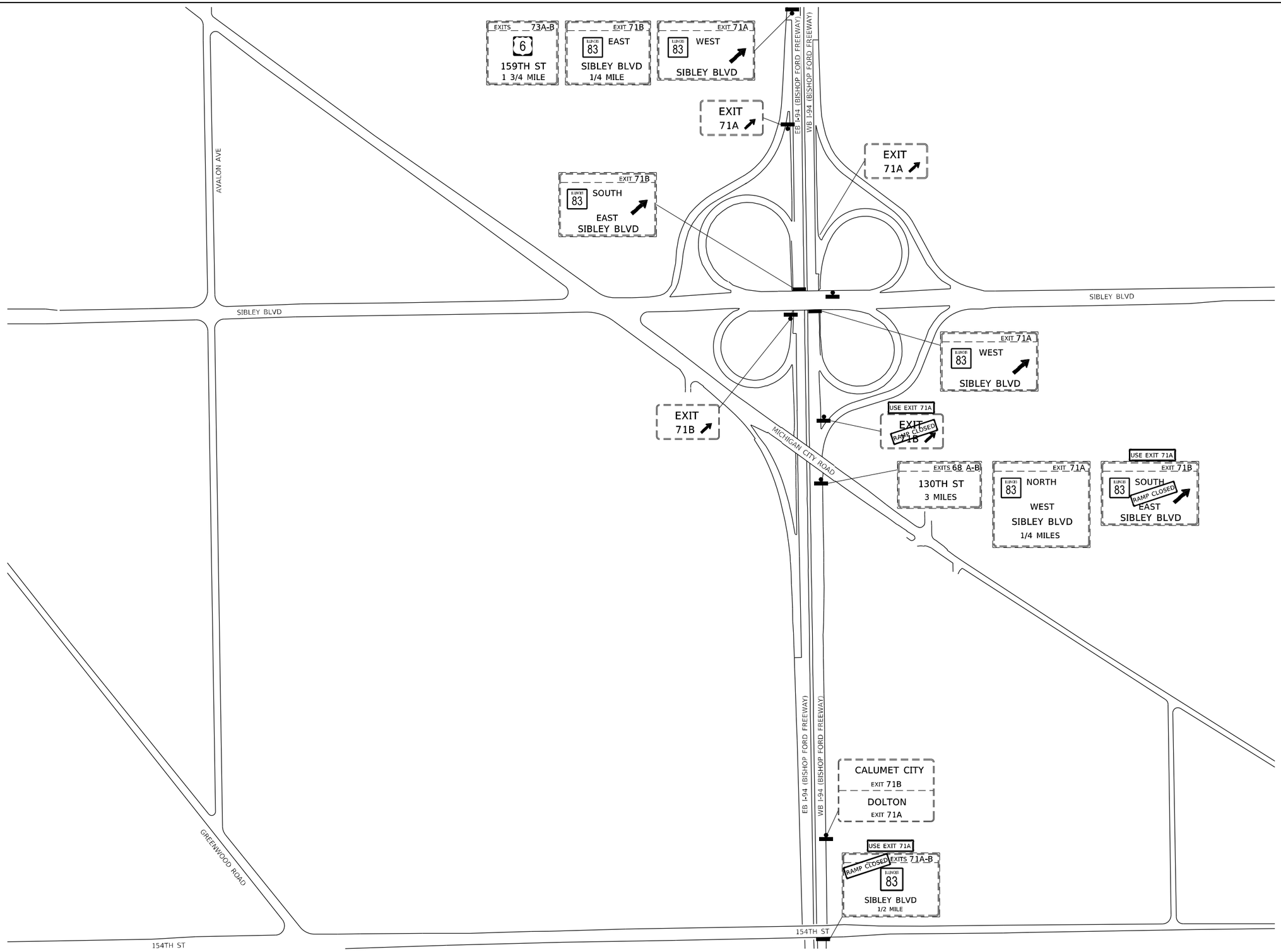

NODEL: Default
FILE NAME: N:\2023\23072\1\Drawings\Main\CADD_Sheets\D162R62-sh-detour01.dgn

V3 Companies
7325 Janes Avenue
Woodridge, IL 60517
630.724.9200 phone
630.724.9202 fax
www.v3co.com

USER NAME = amuro	DESIGNED - AM	REVISED -
	DRAWN - DRP	REVISED -
PLOT SCALE = 1000'	CHECKED - JWB	REVISED -
PLOT DATE = 3/3/2025	DATE - 3/3/2025	REVISED -

STATE OF ILLINOIS
DEPARTMENT OF TRANSPORTATION

I-94 BISHOP FREEWAY IMPROVEMENT OVER MICHIGAN CITY ROAD
MAINTENANCE OF TRAFFIC - I-94 STAGE 1 & 2 OVERHEAD SIGNAGE

SCALE: 1"=500' | SHEET 1 OF 1 SHEETS | STA. | TO STA.

F.A.U. RTE.	SECTION	COUNTY	TOTAL SHEETS	SHEET NO.
3593	0606(2HB)R-86	COOK	157	34
		CONTRACT NO. 62R62		
	ILLINOIS	FED. AID PROJECT		

SIGN DETAIL
1:25

MOT TEMPORARY SIGN PANEL "RAMP CLOSED" WILL BE MEASURED AND PAID FOR SEPARATELY AT THE CONTRACT UNIT PRICE FOR TEMPORARY INFORMATION SIGNING.

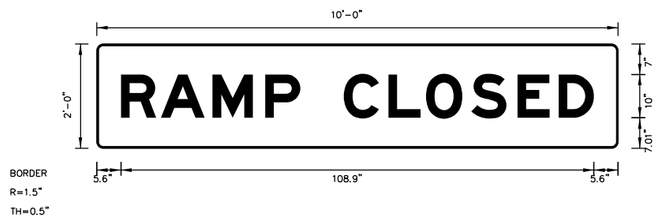

SIGN NUMBER	name	
WIDTH x HGHT.	10'-0" x 2'-0"	
BORDER WIDTH	0.5"	
CORNER RADIUS	1.5"	
MOUNTING	Overhead	
BACKGROUND	TYPE:	Reflective
	COLOR:	Orange
LEGEND/BORDER	TYPE:	Reflective
	COLOR:	White/White

SYMBOL	ROT	X	Y	WID	HT

Panel Style: Street Name 4-3in.ssi
Dimensions are in inches.tenths

Letter locations are panel edge to lower left corner

LETTER POSITIONS (X)

R	A	M	P		C	L	O	S	E	D	LENGTH	SERIES/SIZE
5.6	14.8	26.7	38.8	46.9	56.9	67.2	75.8	86.3	96.9	106.4	108.9	EM 2000 10

SIGN DETAIL
1:25

MOT TEMPORARY SIGN PANEL "USE EXIT 71A" WILL BE MEASURED AND PAID FOR SEPARATELY AT THE CONTRACT UNIT PRICE FOR TEMPORARY INFORMATION SIGNING.

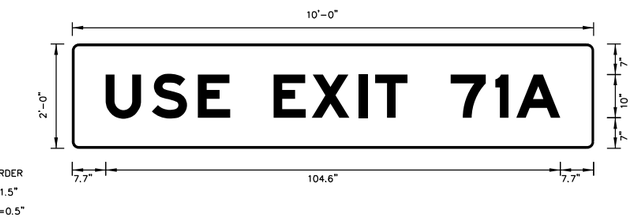

SIGN NUMBER	name	
WIDTH x HGHT.	10'-0" x 2'-0"	
BORDER WIDTH	0.5"	
CORNER RADIUS	1.5"	
MOUNTING	Overhead	
BACKGROUND	TYPE:	Reflective
	COLOR:	Orange
LEGEND/BORDER	TYPE:	Reflective
	COLOR:	White/White

SYMBOL	ROT	X	Y	WID	HT

Panel Style: Street Name 4-3in.ssi
Dimensions are in inches.tenths

Letter locations are panel edge to lower left corner

LETTER POSITIONS (X)

U	S	E		E	X	I	T		7	1	A	LENGTH	SERIES/SIZE
7.7	18.3	28.9	36.3	46.3	55.1	65.9	69.7	77.1	87.1	97.4	102.2	104.6	EM 2000 10

MODEL: Default
FILE NAME: N:\2023\2307211\Drawings\Mstr\CADD_Sheets\D162R62-sht-MOTsign01.dgn

V3 Companies
7325 Janes Avenue
Woodridge, IL 60517
630.724.9200 phone
630.724.9202 fax
www.v3co.com

USER NAME = jbauer	DESIGNED - AM	REVISED -
	DRAWN - DRP	REVISED -
PLOT SCALE = 2'	CHECKED - JWB	REVISED -
PLOT DATE = 12/20/2024	DATE - 12/20/2024	REVISED -

STATE OF ILLINOIS
DEPARTMENT OF TRANSPORTATION

MAINTENANCE OF TRAFFIC SIGN PANEL DETAILS

SCALE: N.T.S. | SHEET 1 OF 1 SHEETS | STA. TO STA.

F.A.U. RTE.	SECTION	COUNTY	TOTAL SHEETS	SHEET NO.
3593	0606(2HB)R-86	COOK	157	35
		CONTRACT NO. 62R62		
	ILLINOIS	FED. AID PROJECT		

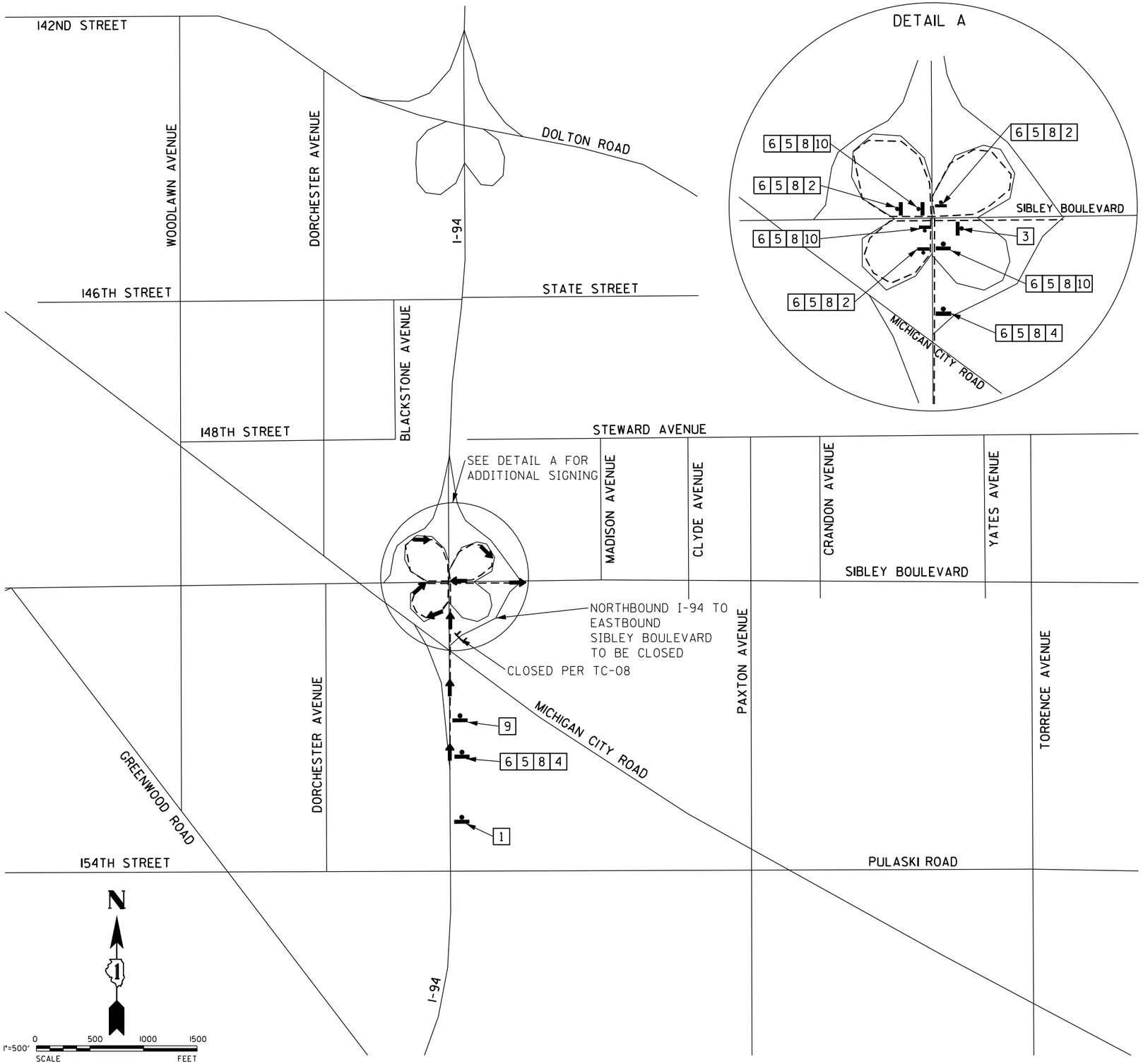

SIGN NUMBER	SIGN TYPE	
1	DETOUR AHEAD	W20-2 (O) 48
2		M6-2R 21X15
3	END DETOUR	M4-8a (O) 24X12
4		M6-3 21x15
5	EAST	M3-2 (O) 24X12
6	DETOUR	M4-8 (O) 24X12
7	EXIT CLOSED	E5-2a 48X30
8	ILLINOIS 83	M1-5 (O) 24X24 (36X36 SIZE ON INTERSTATES)
9	RAMP DETOUR	SPECIAL SIGN 48X48
10		M5-2R 21X15

LEGEND

- DETOUR SIGN, NUMBER DENOTES TYPE
- TYPE III BARRICADE
- DETOUR ROUTE

DETOUR
EAST
SIBLEY BOULEVARD

TYPICAL LAYOUT OF SIGNS

OR

DETOUR
EAST
ILLINOIS
83

NOTES:

SIGN SPACING UNLESS OTHERWISE STATED SHALL FOLLOW DISTRICT 1 STANDARD TC-21

MODEL: Default
FILE NAME: N:\2023\2307241\Drawings\Main\CADD_Sheets\D162R62-sht-detour01.dgn

V3 Companies
7325 Janes Avenue
Woodridge, IL 60517
630.724.9200 phone
630.724.9202 fax
www.v3co.com

USER NAME = jbauer	DESIGNED - AM	REVISED -	
	DRAWN - DRP	REVISED -	
PLOT SCALE = 1000'	CHECKED - JWB	REVISED -	
PLOT DATE = 12/20/2024	DATE - 12/20/2024	REVISED -	

STATE OF ILLINOIS
DEPARTMENT OF TRANSPORTATION

DETOUR PLAN - WB I-94 TO EB SIBLEY BOULEVARD

SCALE: 1"=500' | SHEET 1 OF 2 SHEETS | STA. TO STA.

F.A.U. RTE.	SECTION	COUNTY	TOTAL SHEETS	SHEET NO.
3593	0606(2HB)R-86	COOK	157	36
		CONTRACT NO. 62R62		
	ILLINOIS	FED. AID PROJECT		

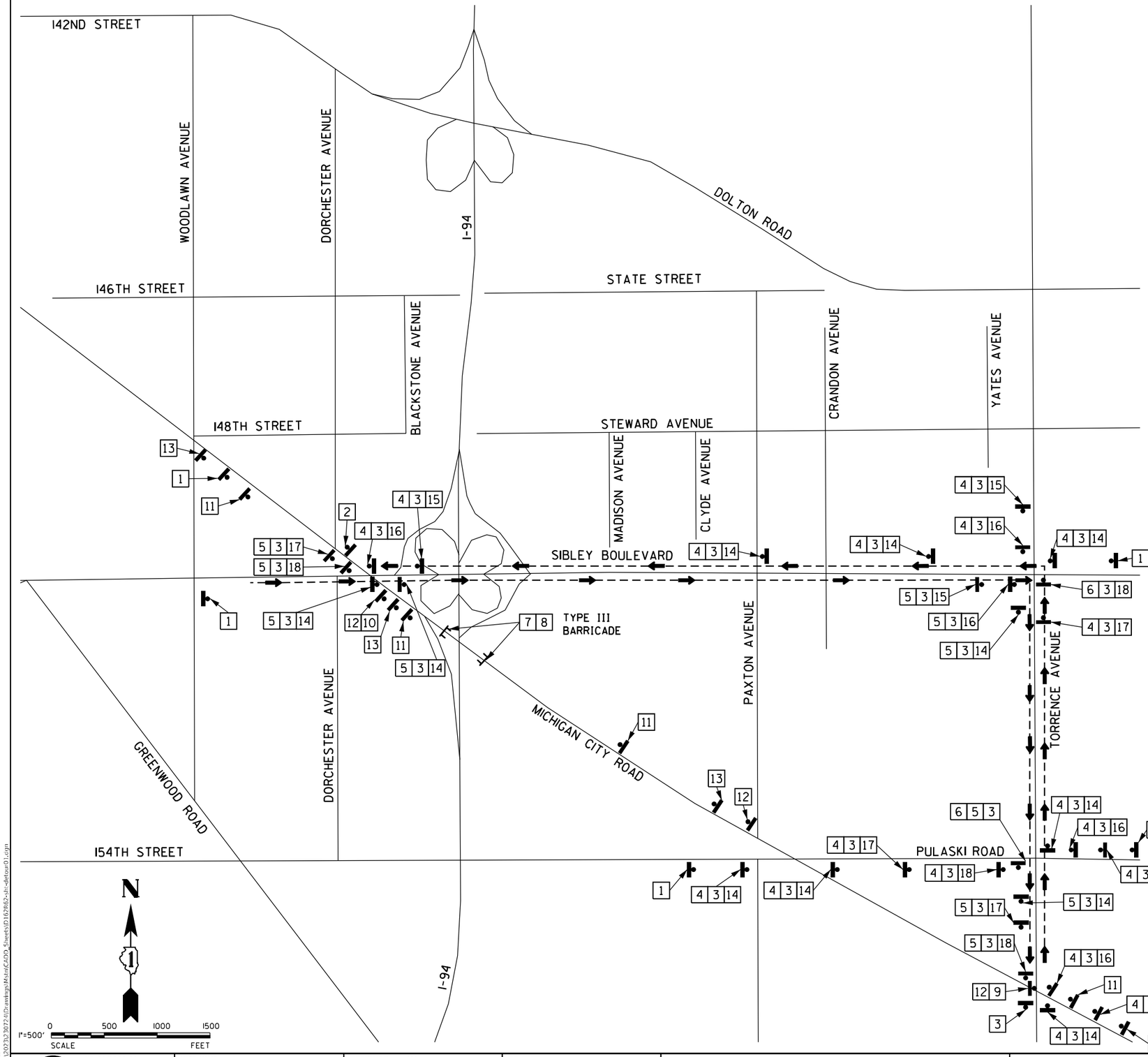

SIGN NUMBER	SIGN TYPE
1	W20-2 (0) 48
2	M4-8a (0) 24X12
3	SPECIAL SIGN(S): BLACK LEGEND ORANGE BACKGROUND (RETROREFLECTIVE) 6" C-SERIES TEXT 24" X 18"
4	M3-1 (0) 24X12
5	M3-3 (0) 24X12
6	M4-8 (0) 24X12
7	R11-2 48X30
8	R11-2b 48X30
9	M4-10R 48X18
10	M4-10L 48X18
11	W20-3(0)-B
12	R11-4 60X30
13	W20-3(0)
14	M4-9S 30X24
15	30X24
16	M4-9R 30X24
17	30X24
18	M4-9L 30X24

NOTES:

SIGN SPACING UNLESS OTHERWISE STATED SHALL FOLLOW DISTRICT 1 STANDARD TC-21

EAST MICHIGAN CITY ROAD DETOUR

TYPICAL LAYOUT OF SIGNS

LEGEND

DETOUR SIGN, NUMBER DENOTES TYPE

TYPE III BARRICADE WITH FLASHING LIGHTS

- DETOUR ROUTE

MODEL: Default
FILE NAME: N:\2023\23072\1\Drawings\Mstn\CADD_Sheets\D162R62-sh-detour01.dgn

V3 Companies
7325 Janes Avenue
Woodridge, IL 60517
630.724.9200 phone
630.724.9202 fax
www.v3co.com

USER NAME = jbauer	DESIGNED - AM	REVISED -
	DRAWN - DRP	REVISED -
PLOT SCALE = 1000'	CHECKED - JWB	REVISED -
PLOT DATE = 12/20/2024	DATE - 12/20/2024	REVISED -

STATE OF ILLINOIS
DEPARTMENT OF TRANSPORTATION

DETOUR PLAN - MICHIGAN CITY ROAD

SCALE: 1"=500' | SHEET 2 OF 2 SHEETS | STA. TO STA.

F.A.U. RTE.	SECTION	COUNTY	TOTAL SHEETS	SHEET NO.
3593	0606(2HB)R-86	COOK	157	37

CONTRACT NO. 62R62

ILLINOIS | FED. AID PROJECT

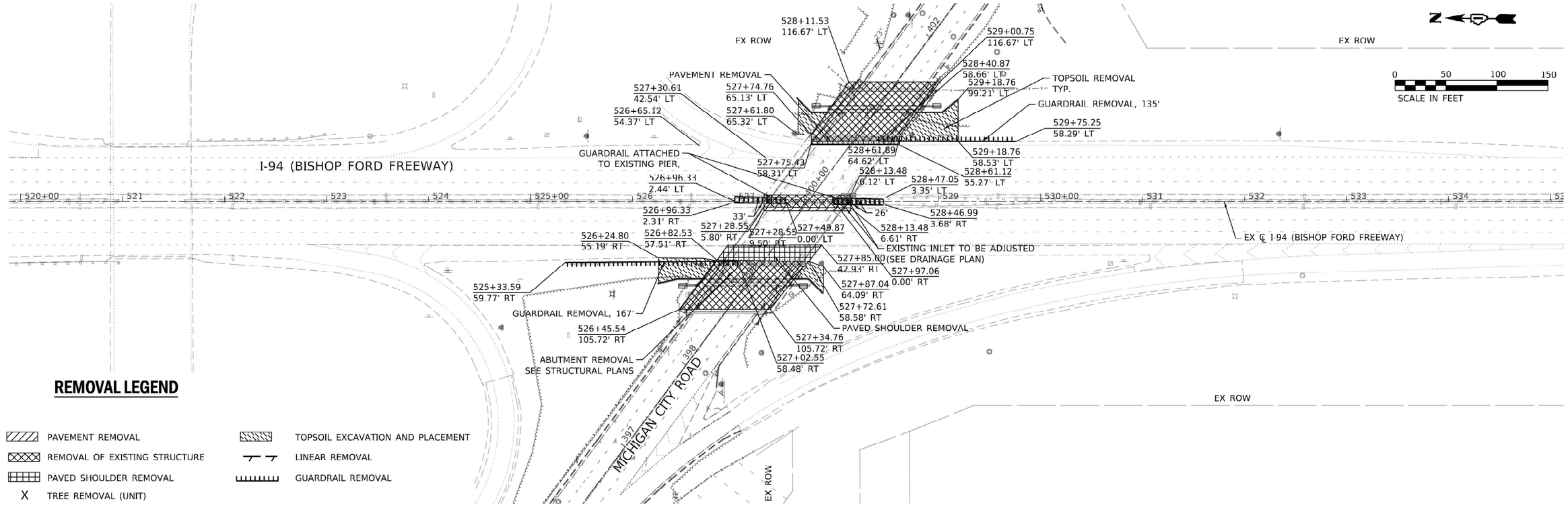

REMOVAL

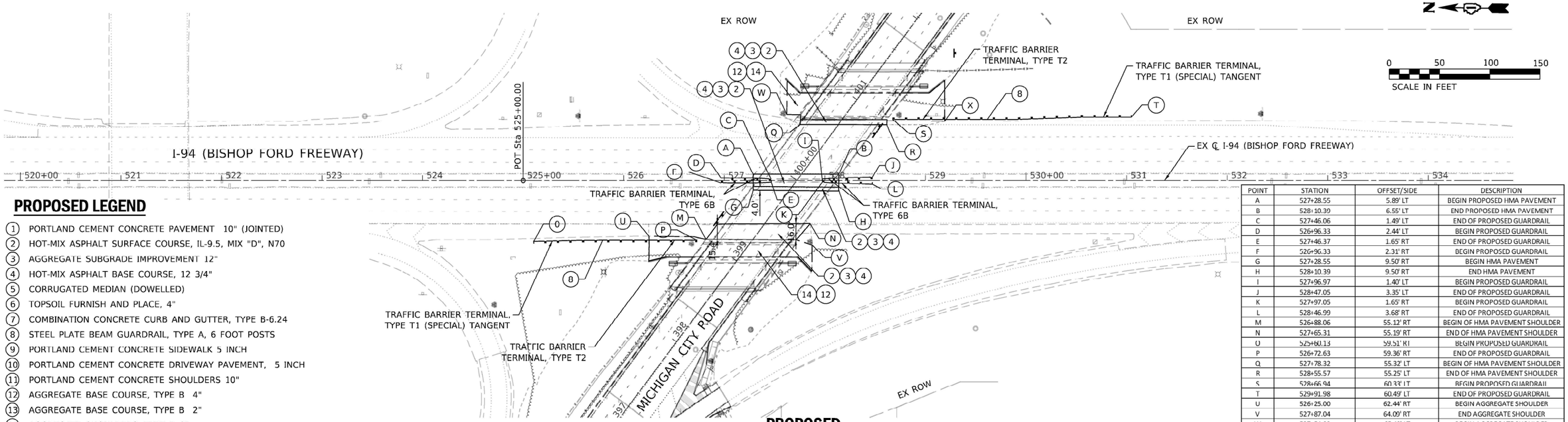

PROPOSED

POINT	STATION	OFFSET/SIDE	DESCRIPTION
A	527+28.55	5.89' LT	BEGIN PROPOSED HMA PAVEMENT
B	528+10.39	6.55' LT	END PROPOSED HMA PAVEMENT
C	527+46.06	1.49' LT	END OF PROPOSED GUARDRAIL
D	526+96.33	2.44' LT	BEGIN PROPOSED GUARDRAIL
E	527+46.37	1.65' RT	END OF PROPOSED GUARDRAIL
F	526+96.33	2.31' RT	BEGIN PROPOSED GUARDRAIL
G	527+28.55	9.50' RT	BEGIN HMA PAVEMENT
H	528+10.39	9.50' RT	END HMA PAVEMENT
I	527+96.97	1.40' LT	BEGIN PROPOSED GUARDRAIL
J	528+47.05	3.35' LT	END OF PROPOSED GUARDRAIL
K	527+97.05	1.65' RT	BEGIN PROPOSED GUARDRAIL
L	528+46.99	3.68' RT	END OF PROPOSED GUARDRAIL
M	526+88.06	55.12' RT	BEGIN OF HMA PAVEMENT SHOULDER
N	527+65.31	55.19' RT	END OF HMA PAVEMENT SHOULDER
O	525+60.13	59.51' RT	BEGIN PROPOSED GUARDRAIL
P	526+72.63	59.36' RT	END OF PROPOSED GUARDRAIL
Q	527+78.32	55.32' LT	BEGIN OF HMA PAVEMENT SHOULDER
R	528+55.57	55.25' LT	END OF HMA PAVEMENT SHOULDER
S	528+66.94	60.33' LT	BEGIN PROPOSED GUARDRAIL
T	529+91.98	60.49' LT	END OF PROPOSED GUARDRAIL
U	526+25.00	62.44' RT	BEGIN AGGREGATE SHOULDER
V	527+87.04	64.09' RT	END AGGREGATE SHOULDER
W	527+54.93	65.42' LT	BEGIN AGGREGATE SHOULDER
X	529+31.24	64.10' LT	END AGGREGATE SHOULDER

MODEL: $MODELNAME$
FILE NAME: \\CHICAGO2\gstaff\P220720 IDOT D1 PTB 204-001 Michigan City 3d Bridge\03A Design\C1 CADD\02 Sheet\Roadway\03-D162R62-ill-removal 01.dgn

DELTA ENGINEERING GROUP, LLC
CONSULTING ENGINEERS, CONSTRUCTION MANAGERS, SURVEYORS
111 W JACKSON BLVD, SUITE 910
CHICAGO, IL 60604
T 312.377.7700, F 312.427 6145

USER NAME = denisb	DESIGNED - MA/DB	REVISED -	
	DRAWN - DB	REVISED -	
PLOT SCALE = 100.0000 ' / in.	CHECKED - MA	REVISED -	
PLOT DATE = 12/13/2024	DATE - 12/13/2024	REVISED -	

STATE OF ILLINOIS
DEPARTMENT OF TRANSPORTATION

MICHIGAN CITY ROAD OVER I-94
REMOVAL AND PROPOSED ROADWAY PLAN

SCALE: 1:50 | SHEET 01 OF 01 SHEETS | STA. 525+00.00 TO STA. 535+00.00

F.A.I. RTE.	SECTION	COUNTY	TOTAL SHEETS	SHEET NO.
94	FAI 94 22 STRUCTURE 2	COOK	157	38
		CONTRACT NO. 62R62		
		ILLINOIS	FED. AID PROJECT	

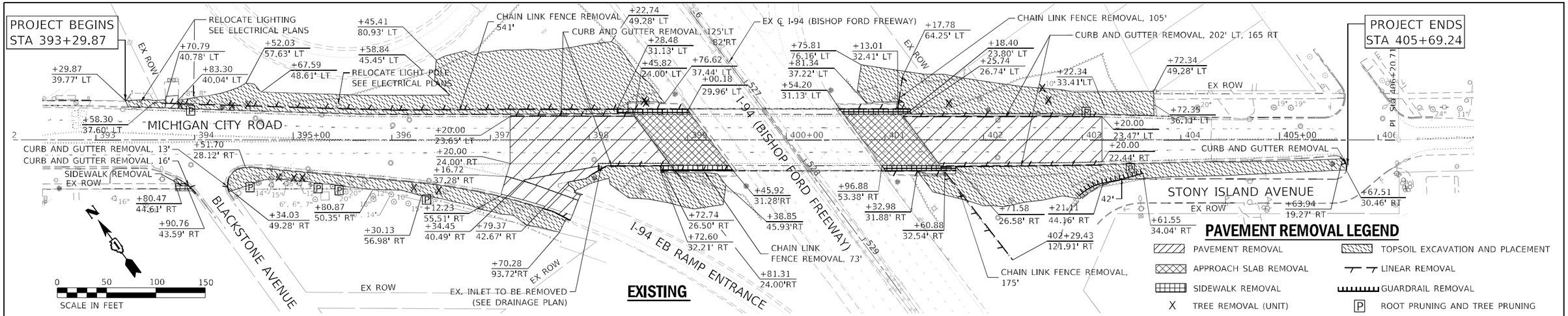

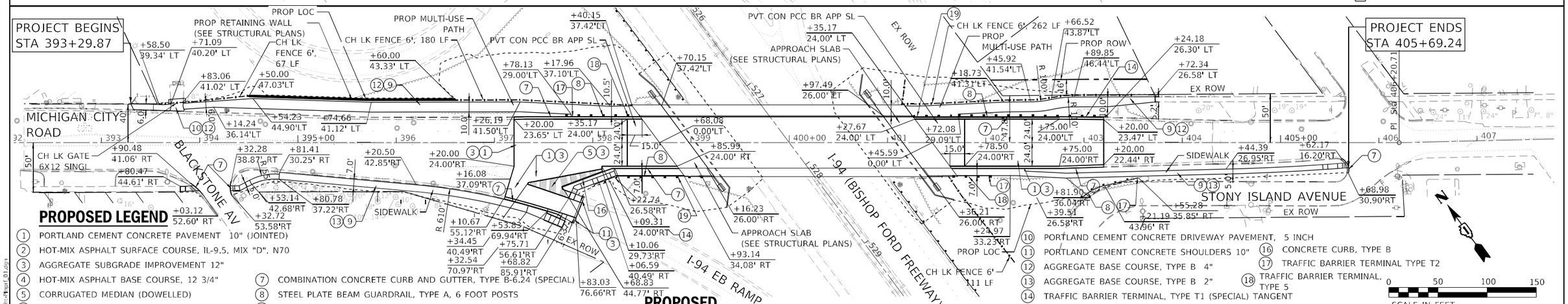

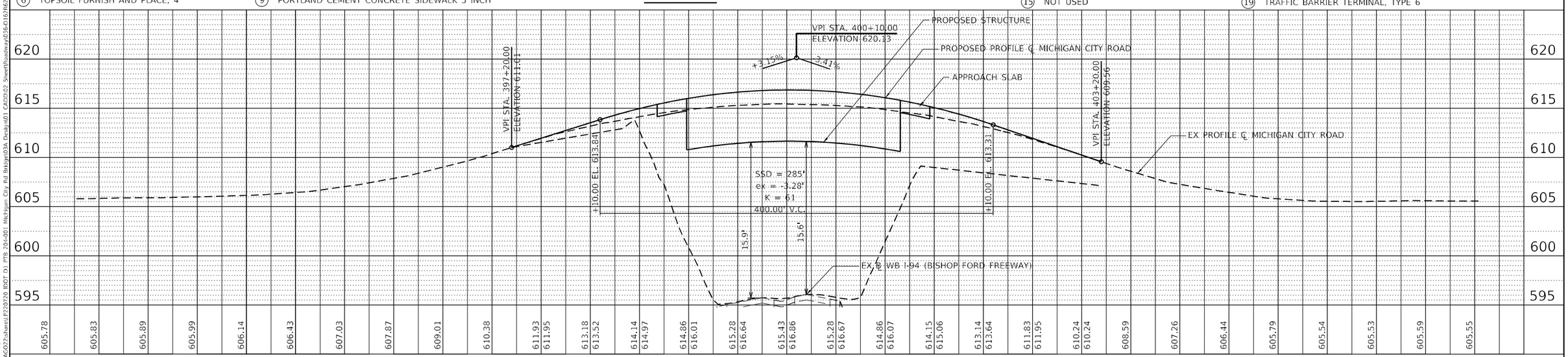

DELTA ENGINEERING GROUP, LLC CONSULTING ENGINEERS, CONSTRUCTION MANAGERS, SURVEYORS 111 W. JACKSON BLVD, SUITE 910 CHICAGO, IL 60604 T 312.377.7700, F 312.427.6145	USER NAME = denish PLOT SCALE = 100.0045 ' / in. PLOT DATE = 12/20/2024	DESIGNED - MA/DB DRAWN - DB CHECKED - MA DATE - 12/13/2024	REVISED - REVISED - REVISED - REVISED -

STATE OF ILLINOIS
DEPARTMENT OF TRANSPORTATION

MICHIGAN CITY ROAD BRIDGE
PROPOSED PLAN AND PROFILE SHEET

SCALE: 1:50 | SHEET 01 OF 01 SHEETS | STA. 392+00.00 TO STA. 401+50.00

F.A.U. RTE.	SECTION	COUNTY	TOTAL SHEETS	SHEET NO.
94	FAI 94 22 STRUCTURE 2	COOK	157	39

CONTRACT NO. 62R62

ILLINOIS | FED. AID PROJECT

PLAN | SURVEYED | PLOTTED | ALIGNMENT CHECKED | R.O.W. CHECKED | CADD FILE NAME | NOTE BOOK | NO. | DATE | BY

PROFILE | SURVEYED | PLOTTED | GRADES CHECKED | BLDG. NOTED | STRUCTURE NOTATNS CHKD | NOTE BOOK | NO. | DATE | BY

MODEL: $MODELNAME$
FILE NAME: \\CHICAGO2\share\P22020 IDOT DJ PTB 204-001 Michigan City Rd Bridge\03A_Design\01 CADD\02 Sheet\Roadway\036D162R62-sht-Plan_01.dgn

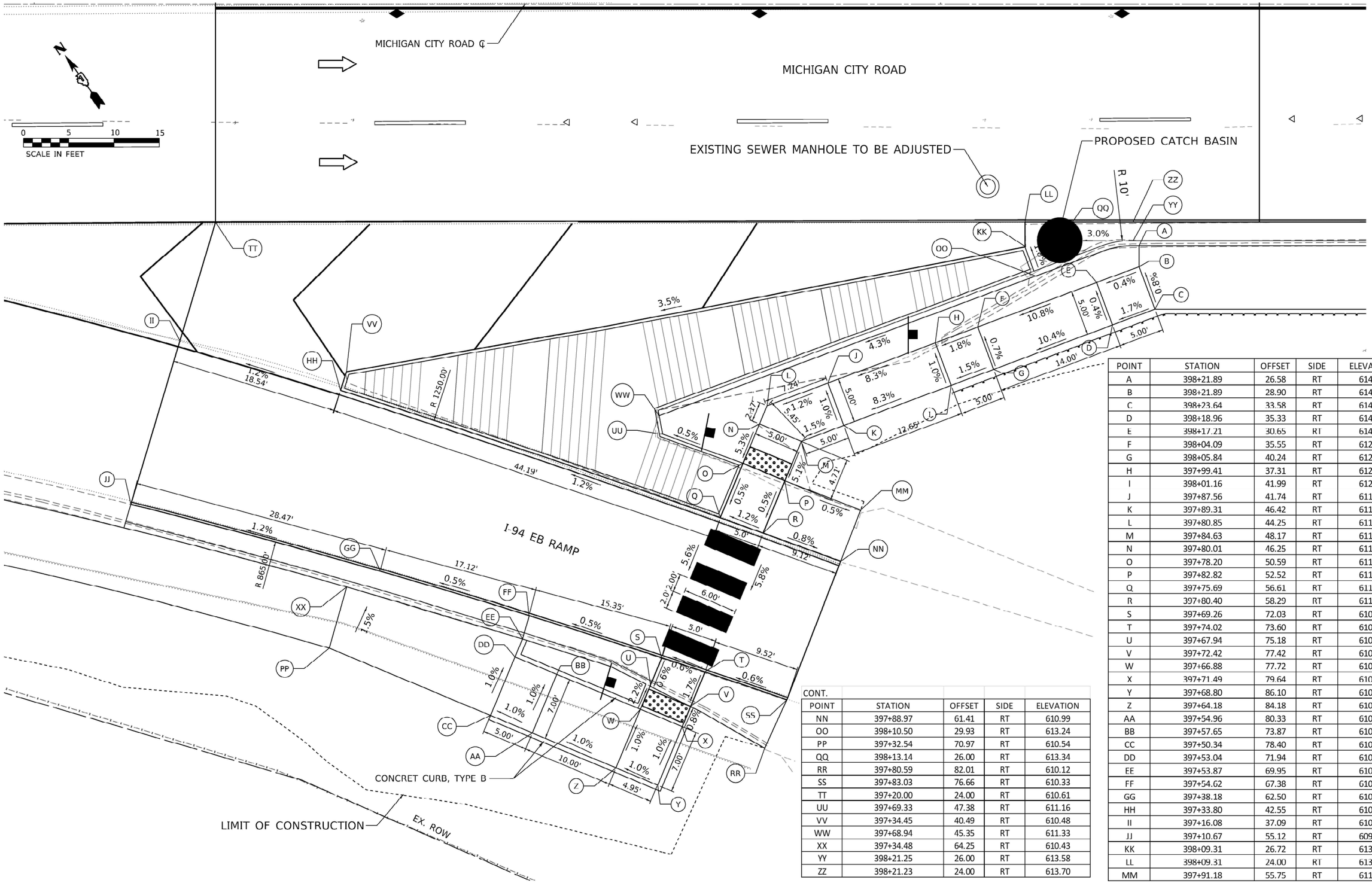

POINT	STATION	OFFSET	SIDE	ELEVATION
A	398+21.89	26.58	RT	614.22
B	398+21.89	28.90	RT	614.24
C	398+23.64	33.58	RT	614.26
D	398+18.96	35.33	RT	614.18
E	398+17.21	30.65	RT	614.20
F	398+04.09	35.55	RT	612.68
G	398+05.84	40.24	RT	612.72
H	397+99.41	37.31	RT	612.59
I	398+01.16	41.99	RT	612.64
J	397+87.56	41.74	RT	611.54
K	397+89.31	46.42	RT	611.59
L	397+80.85	44.25	RT	611.45
M	397+84.63	48.17	RT	611.51
N	397+80.01	46.25	RT	611.46
O	397+78.20	50.59	RT	611.21
P	397+82.82	52.52	RT	611.27
Q	397+75.69	56.61	RT	611.18
R	397+80.40	58.29	RT	611.24
S	397+69.26	72.03	RT	610.24
T	397+74.02	73.60	RT	610.27
U	397+67.94	75.18	RT	610.22
V	397+72.42	77.42	RT	610.20
W	397+66.88	77.72	RT	610.28
X	397+71.49	79.64	RT	610.22
Y	397+68.80	86.10	RT	610.29
Z	397+64.18	84.18	RT	610.35
AA	397+54.96	80.33	RT	610.60
BB	397+57.65	73.87	RT	610.56
CC	397+50.34	78.40	RT	610.68
DD	397+53.04	71.94	RT	610.61
EE	397+53.87	69.95	RT	610.59
FF	397+54.62	67.38	RT	610.16
GG	397+38.18	62.50	RT	610.08
HH	397+33.80	42.55	RT	610.45
II	397+16.08	37.09	RT	610.22
JJ	397+10.67	55.12	RT	609.75
KK	398+09.31	26.72	RT	613.18
LL	398+09.31	24.00	RT	613.34
MM	397+91.18	55.75	RT	611.23

CONT.

POINT	STATION	OFFSET	SIDE	ELEVATION
NN	397+88.97	61.41	RT	610.99
OO	398+10.50	29.93	RT	613.24
PP	397+32.54	70.97	RT	610.54
QQ	398+13.14	26.00	RT	613.34
RR	397+80.59	82.01	RT	610.12
SS	397+83.03	76.66	RT	610.33
TT	397+20.00	24.00	RT	610.61
UU	397+69.33	47.38	RT	611.16
VV	397+34.45	40.49	RT	610.48
WW	397+68.94	45.35	RT	611.33
XX	397+34.48	64.25	RT	610.43
YY	398+21.25	26.00	RT	613.58
ZZ	398+21.23	24.00	RT	613.70

MODEL: $MODELNAME$
FILE NAME: \\CHICAGO22\data\P22072C IDOT D1 FTB 704-001 Michigan City 3d Bridge\03A Design\C1 CADD\02 Sheet\Roadway\037-D162R62-sh-Ramp ADA 01.dgn

DELTA ENGINEERING GROUP, LLC
CONSULTING ENGINEERS, CONSTRUCTION MANAGERS, SURVEYORS
111 W JACKSON BLVD, SUITE 910
CHICAGO, IL 60604
T 312.377.7700, F 312.427 6145

USER NAME = denisb	DESIGNED - MA/DB	REVISED -	
	DRAWN - DB	REVISED -	
PLOT SCALE = 10.0000 ' / in.	CHECKED - MA	REVISED -	
PLOT DATE = 12/13/2024	DATE - 12/13/2024	REVISED -	

STATE OF ILLINOIS
DEPARTMENT OF TRANSPORTATION

MICHIGAN CITY ROAD OVER I-94
ADA RAMP DETAILS

SCALE: 1:5 | SHEET 01 OF 02 SHEETS | STA.397+00.00 TO STA.398+50.00

F.A.I. RTE.	SECTION	COUNTY	TOTAL SHEETS	SHEET NO.
94	FAI 94 22 STRUCTURE 2	COOK	157	40
		CONTRACT NO. 62R62		
		ILLINOIS	FED. AID PROJECT	

POINT	STATION	OFFSET	SIDE	ELEVATION
A	393+80.47	44.61	RT	605.67
B	393+80.47	49.74	RT	605.76
C	393+85.53	49.46	RT	605.51
D	393+85.52	44.46	RT	605.54
E	393+90.53	49.19	RT	605.48
F	393+90.52	43.89	RT	605.51
G	393+89.27	43.16	RT	605.98
H	393+90.48	41.06	RT	605.58
I	393+94.57	43.94	RT	605.57
J	393+99.85	48.88	RT	605.54
K	393+96.22	48.88	RT	605.44
L	394+01.23	54.29	RT	606.21
M	394+03.12	52.60	RT	605.52

MICHIGAN CITY ROAD

POINT	STATION	OFFSET	SIDE	ELEVATION
A	394+81.23	32.24	RT	606.42
B	394+80.78	37.22	RT	606.49
C	394+81.41	30.25	RT	606.39
D	394+50.83	38.25	RT	605.96
E	394+53.05	42.73	RT	606.04
F	394+46.30	40.61	RT	605.91
G	394+48.61	45.04	RT	605.97
H	394+35.07	52.58	RT	606.27
I	394+41.23	48.90	RT	605.80
J	394+40.09	43.85	RT	605.77
K	394+33.67	43.86	RT	605.68
L	394+33.93	48.90	RT	605.70
M	394+31.34	48.91	RT	605.79
N	394+31.16	43.86	RT	605.77
O	394+32.28	38.87	RT	605.76
P	394+34.63	39.72	RT	606.30

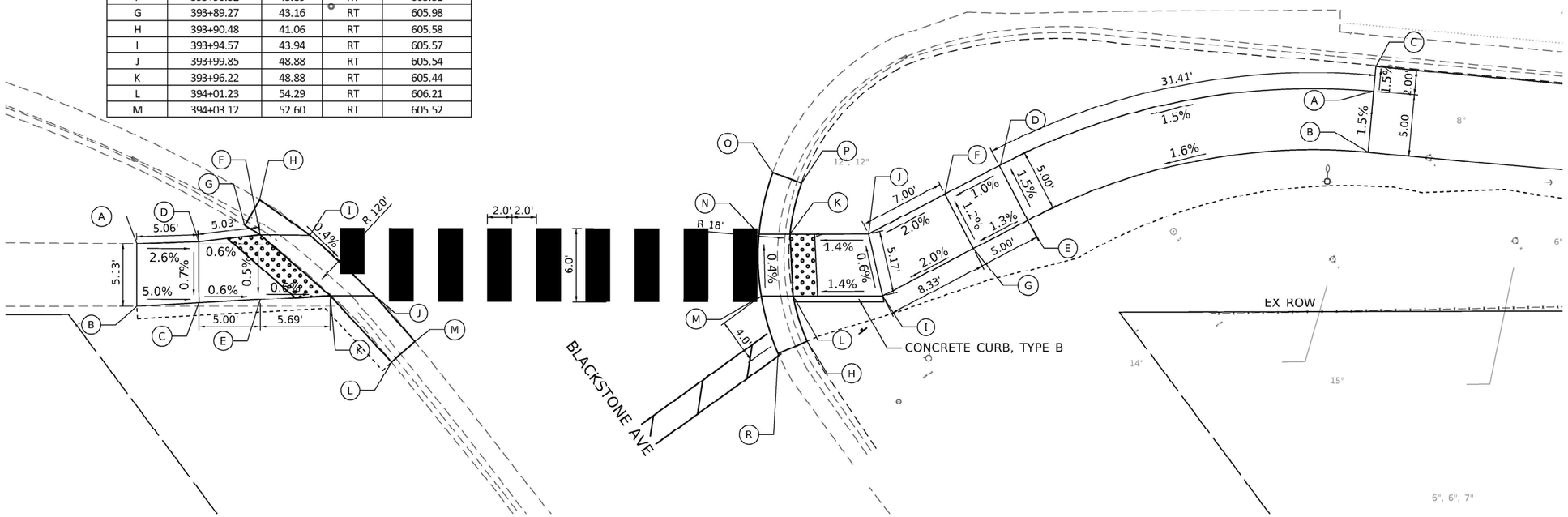

0 5 10 15
SCALE IN FEET

POINT	STATION	OFFSET	SIDE	ELEVATION
A	393+69.98	32.51	RT	606.08
B	393+84.48	32.07	RT	606.07
C	393+83.97	34.07	RT	606.10
D	393+83.17	37.23	RT	606.15
E	393+83.30	40.04	RT	606.19
F	393+71.01	37.89	RT	606.16
G	393+70.91	39.19	RT	606.18
H	393+83.53	45.07	RT	606.78
I	393+70.54	44.08	RT	606.57

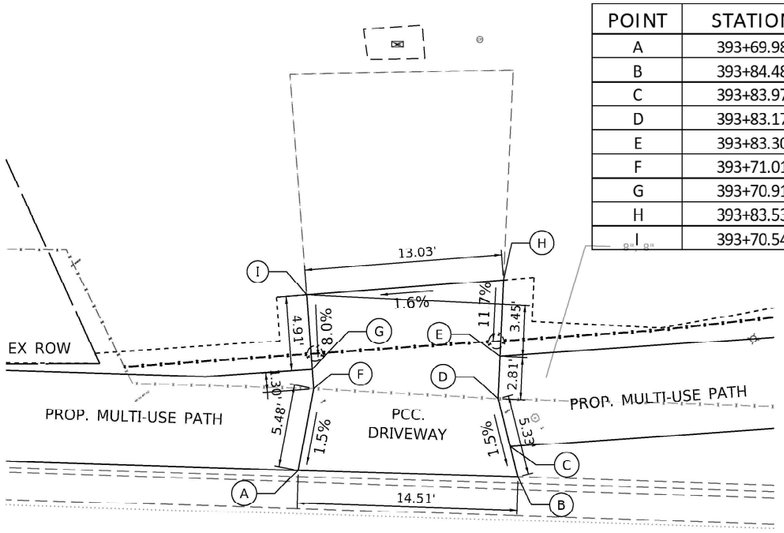

MICHIGAN CITY ROAD

0 5 10 15
SCALE IN FEET

MICHIGAN CITY ROAD

POINT	STATION	OFFSET	SIDE	ELEVATION
A	405+67.16	20.55	RT	605.28
B	405+69.24	25.40	RT	605.33
C	405+67.70	25.52	RT	605.29
D	405+65.34	20.69	RT	605.24
E	405+58.17	26.25	RT	605.43
F	405+57.78	21.27	RT	605.35
G	405+48.20	26.98	RT	605.76
H	405+47.81	22.00	RT	605.68
I	405+42.82	22.35	RT	605.75
J	405+43.21	27.33	RT	605.83

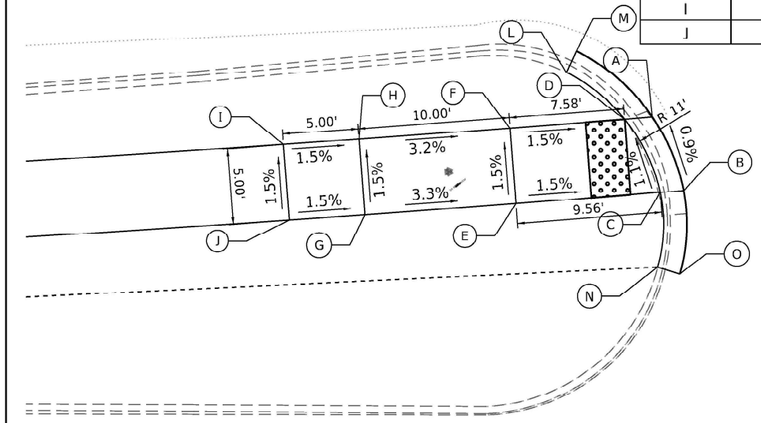

STONY ISLAND AVENUE

0 5 10 15
SCALE IN FEET

MODEL: $MODELNAME$
FILE NAME: \\CHICAGO22\staveL\P22072C IDOT D1 PTB 304-001 Michigan City 4d Bridge\03A Design\C1 CADD\C2 Sheet\Roadway\038-0162R62-Ph-Ramp ADA 02.dgn

DELTA ENGINEERING GROUP, LLC
CONSULTING ENGINEERS, CONSTRUCTION MANAGERS, SURVEYORS
111 W JACKSON BLVD, SUITE 910
CHICAGO, IL 60604
T 312.377.7700, F 312.427 6145

USER NAME = denisb	DESIGNED - MA/DB	REVISED -
	DRAWN - DB	REVISED -
PLOT SCALE = 10.0000 ' / in.	CHECKED - MA	REVISED -
PLOT DATE = 12/13/2024	DATE - 12/13/2024	REVISED -

STATE OF ILLINOIS
DEPARTMENT OF TRANSPORTATION

MICHIGAN CITY ROAD OVER I-94
ADA RAMP DETAILS

SCALE: 1:5 | SHEET 02 OF 02 SHEETS | STA. 392+00.00 TO STA. 395+00.00

F.A.I. RTE.	SECTION	COUNTY	TOTAL SHEETS	SHEET NO.
94	FAI 94 22 STRUCTURE 2	COOK	157	41
		CONTRACT NO. 62R62		
	ILLINOIS	FED. AID PROJECT		

DESCRIPTION	UNITS	QUANTITY
PREFORMED PLASTIC PAVEMENT MARKING, TYPE D - STANDARD - LINE 7"	FOOT	396
MODIFIED URETHANE PAVEMENT MARKING - LINE 4"	FOOT	2443
MODIFIED URETHANE PAVEMENT MARKING - LINE 8"	FOOT	227
MODIFIED URETHANE PAVEMENT MARKING - LINE 12"	FOOT	85
MODIFIED URETHANE PAVEMENT MARKING - LINE 24"	FOOT	87
GROOVING FOR RECESSED PAVEMENT MARKING 8"	FOOT	227
RAISED REFLECTIVE PAVEMENT MARKER	EACH	72
RAISED REFLECTIVE PAVEMENT MARKER REMOVAL	EACH	72

PROPOSED/RELOCATE SIGN SCHEDULE

SIGN ID	SIGN DESCRIPTION	ALIGNMENT	LOCATION		SIGN		SUPPORT			SIGN PANEL - TYPE 1 (SQ FT)	RELOC SIGN PANEL ASSEMBLY TYPE A (EACH)	RELOC SIGN PANEL T1 (SQ FT)	METAL POST - TYPE A (FOOT)
			STATION	OFFSET	WIDTH (IN)	HEIGHT (IN)	POST TYPE	NO. OF POSTS	LENGTH				
R1-1-TS-01-R	STOP SIGN	MCRB EB	394+36.07	43.34 RT	2.5	2.5	GROUND, STL	1	11		1	6	
M1-1-TS-02-R	NTERSTATE ROUTE SIGN	MCRB EB	397+99.00	43.56 RT	2	2	GROUND, STL	1	16		1	4	
M3-2-TS-01-L	DIRECTION	MCRB EB	397+96.95	33.38 RT	1.25	1.75						2	
M6-2-TS-03-L	ARROW	MCRB EB	397+96.95	33.38 RT	1.5	2						3	
W4-2-TS-03-R	MERGE TO LEFT	MCRB EB	401+87.18	29.47 RT	2.5	2.5	GROUND, STL	1	11		1	6	
M1-1-TS-02-R	NTERSTATE ROUTE SIGN	MCRB WB	397+66.33	29.32 LT	2	2	GROUND, STL	1	16		1	4	
M4-5-TS-01-L	TO	MCRB WB	397+67.44	28.05 LT	1	2						2	
M3-4-TS-02-	WEST	MCRB WB	397+67.44	28.05 LT	1	2						2	
M6-3-TS-04-L	ARROW	MCRB WB	397+67.44	28.05 LT	1	2						2	
W11-2-TS-01-P	PEDESTRIAN	MCRB EB	397+74.66	47.30 RT	2	2	GROUND, STL	1	11	4			11
W16-7P-TS-02-P	ARROW	MCRB EB	397+74.67	47.30 RT	1	2				2			
W11-2-TS-03-P	PEDESTRIAN	MCRB EB	397+63.60	74.74 RT	2	2	GROUND, STL	1	11	4			11
W16-7P-TS-04-P	ARROW	MCRB EB	397+63.61	74.74 RT	1	2				2			
									TOTAL	12	4	32	21

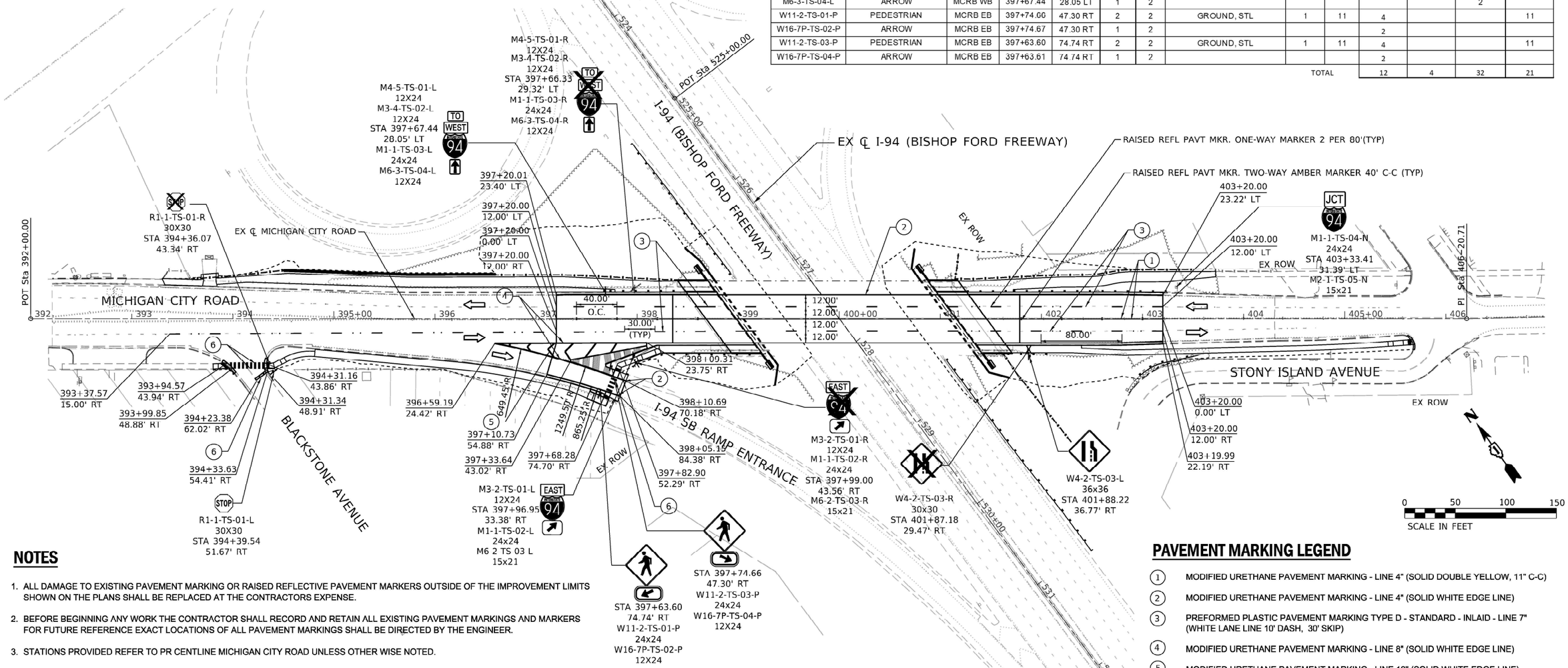

NOTES

1. ALL DAMAGE TO EXISTING PAVEMENT MARKING OR RAISED REFLECTIVE PAVEMENT MARKERS OUTSIDE OF THE IMPROVEMENT LIMITS SHOWN ON THE PLANS SHALL BE REPLACED AT THE CONTRACTORS EXPENSE.
2. BEFORE BEGINNING ANY WORK THE CONTRACTOR SHALL RECORD AND RETAIN ALL EXISTING PAVEMENT MARKINGS AND MARKERS FOR FUTURE REFERENCE EXACT LOCATIONS OF ALL PAVEMENT MARKINGS SHALL BE DIRECTED BY THE ENGINEER.
3. STATIONS PROVIDED REFER TO PR CENTLINE MICHIGAN CITY ROAD UNLESS OTHER WISE NOTED.
4. ALL PAVEMENT MARKINGS INSTALLED OVER CONCRETE SHALL BE MODIFIED URETHANE OF THE WIDTH SPECIFIED.
5. ALL SIGNS SHALL BE GROUND MOUNTED UNLESS OTHERWISE NOTED.
6. SEE SIGN SCHEDULE FOR SIGN POST LENGTHS.
7. INSTALL RAISED REFLECTIVE PAVEMENT MARKER PER DISTRICT 1 STANDARD TC-11
8. NO RAISED REFLECTIVE PAVEMENT MARKERS ON BRIDGE DECK.
9. PREFORMED PAVEMENT MARKINGS TYPE D AND GROOVING FOR RECESSED PAVEMENT MARKINGS SHALL BE USED FOR ALL LANE LINE PAVEMENT MARKINGS WITHIN BRIDGE LIMITS AND PCC PAVEMENTS.

GUIDE SIGN SEQUENCE NUMBERING CODE

SGN-TS-01-N

SIGN

MOUNTING TYPE: TS - TELESCOPING STEEL; BS - BREAKAWAY STEEL; WP - WOOD POST; SS - SIGN STRUCTURE

SIGN PANEL NUMBER: REMOVED (R); PROPOSED (P); REMAIN (N); RELOCATED (L)

PAVEMENT MARKING LEGEND

1. MODIFIED URETHANE PAVEMENT MARKING - LINE 4" (SOLID DOUBLE YELLOW, 11" C-C)
2. MODIFIED URETHANE PAVEMENT MARKING - LINE 4" (SOLID WHITE EDGE LINE)
3. PREFORMED PLASTIC PAVEMENT MARKING TYPE D - STANDARD - INLAID - LINE 7" (WHITE LANE LINE 10' DASH, 30' SKIP)
4. MODIFIED URETHANE PAVEMENT MARKING - LINE 8" (SOLID WHITE EDGE LINE)
5. MODIFIED URETHANE PAVEMENT MARKING - LINE 12" (SOLID WHITE EDGE LINE)
6. MODIFIED URETHANE PAVEMENT MARKING - LINE 24" (SOLID WHITE STOP BAR)

X SIGN PANEL REMOVAL OR REMOVE SIGN PANEL ASSEMBLY

PROPOSED SIGN PANEL OR SIGN PANEL ASSEMBLEY

RAISED REFLECTIVE PAVEMENT MARKER ONE-WAY CRYSTAL MARKER

RAISED REFLECTIVE PAVEMENT MARKER TWO-WAY AMBER MARKER

DELTA ENGINEERING GROUP, LLC
CONSULTING ENGINEERS, CONSTRUCTION MANAGERS, SURVEYORS
111 W JACKSON BLVD, SUITE 910
CHICAGO, IL 60604
T 312.377.7700, F 312.427 6145

USER NAME = denisb	DESIGNED - MA/DB	REVISED -
	DRAWN - DB	REVISED -
PLOT SCALE = 100.0045 ' / in.	CHECKED - MA	REVISED -
PLOT DATE = 12/20/2024	DATE - 12/13/2024	REVISED -

STATE OF ILLINOIS
DEPARTMENT OF TRANSPORTATION

MICHIGAN CITY ROAD OVER F.A.I. ROUTE 94
PAVEMENT MARKING AND SIGNING PLAN

SCALE: 1:50 | SHEET 01 OF 02 SHEETS | STA. 392+00.00 TO STA. 401+50.00

F.A.I. RTE.	SECTION	COUNTY	TOTAL SHEETS	SHEET NO.
94	FAI 94 22 STRUCTURE 2	COOK	157	42
		CONTRACT NO. 62R62		
		ILLINOIS	FED. AID PROJECT	

MODEL: $MODELNAME$
FILE NAME: \\CHICAGO22\shared\P220720 IDOT D1 PTB 204-001 Michigan City Rd Bridge\03A Design\C1 CADD\C2 Sheet\Roadway\039-D162R62-Jht-Pvmt Mrcrg 01.dgn

PROPOSED/REMOVE SIGN SCHEDULE

SIGN ID	SIGN DESCRIPTION	ALIGNMENT	LOCATION		SIGN		SUPPORT			SIGN PANEL T3 (SQ FT)	REMOVE SIGN PANEL T3 (SQ FT)
			STATION	OFFSET	WIDTH (IN)	HEIGHT (IN)	POST TYPE	NO. OF POSTS	LENGTH		
SGN-SS-01-R	MICHIGAN CITY ROAD	I-94 EB	527+08.50	39.20 RT	13.5	2	ATTACHED ON STRUCTURE				27
SGN-SS-02-R	MICHIGAN CITY ROAD	I-94 WB	528+43.24	50.38 LT	13.5	2	ATTACHED ON STRUCTURE				27
SGN-SS-01-P	MICHIGAN CITY ROAD	I-94 EB	527+08.50	39.20 RT	13.5	2	ATTACHED ON STRUCTURE			27	
SGN-SS-02-P	MICHIGAN CITY ROAD	I-94 WB	528+43.24	50.38 LT	13.5	2	ATTACHED ON STRUCTURE			27	
									TOTAL	54	54

DESCRIPTION	UNITS	QUANTITY
THERMOPLASTIC PAVEMENT MARKING -LINE 4"	FOOT	6576
PREFORMED PLASTIC PAVEMENT MARKING, TYPE B - INLAID - LINE 4"	FOOT	2928
THERMOPLASTIC PAVEMENT MARKING LINE 8"	FOOT	1595
THERMOPLASTIC PAVEMENT MARKING -LINE 12"	FOOT	427
PREFORMED PLASTIC PAVEMENT MARKING, TYPE B - INLAID - LINE 8"	FOOT	318
RAISED REFLECTIVE PAVEMENT MARKER	EACH	293
RAISED REFLECTIVE PAVEMENT MARKER REMOVAL	EACH	293

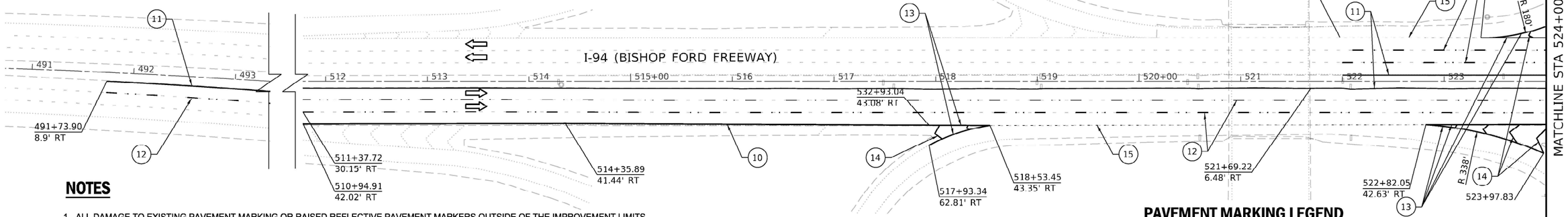

NOTES

1. ALL DAMAGE TO EXISTING PAVEMENT MARKING OR RAISED REFLECTIVE PAVEMENT MARKERS OUTSIDE OF THE IMPROVEMENT LIMITS SHOWN ON THE PLANS SHALL BE REPLACED AT THE CONTRACTORS EXPENSE
2. BEFORE BEGINNING ANY WORK THE CONTRACTOR SHALL RECORD AND RETAIN ALL EXISTING PAVEMENT MARKINGS AND MARKERS FOR FUTURE REFERENCE EXACT LOCATIONS OF ALL PAVEMENT MARKINGS SHALL BE DIRECTED BY THE ENGINEER.
3. STATIONS PROVIDED REFER TO I-94 CENTLINE UNLESS OTHER WISE NOTED.
4. ALL PAVEMENT MARKINGS INSTALLED OVER CONCRETE SHALL BE MODIFIED URETHANE OF THE WIDTH SPECIFIED.
5. ALL SIGNS SHALL BE GROUND MOUNTED UNLESS OTHERWISE NOTED.
6. SEE SIGN SCHEDULE FOR SIGN POST LENGTHS.
7. INSTALL RAISED REFLECTIVE PAVEMENT MARKER PER DISTRICT 1 STANDARD TC-12

PAVEMENT MARKING LEGEND

- (10) THERMOPLASTIC PAVEMENT MARKING - LINE 4" (SOLID WHITE LINE)
- (11) THERMOPLASTIC PAVEMENT MARKING - LINE 4" (SOLID YELLOW LINE)
- (12) PREFORMED PLASTIC PAVEMENT MARKING, TYPE B - LINE 4" WHITE LANE LINE (30' SKIP, 10' DASH)
- (13) THERMOPLASTIC PAVEMENT MARKING - LINE 8" (SOLID WHITE LINE)
- (14) THERMOPLASTIC PAVEMENT MARKING - LINE 12" (WHITE SOLID CHEVRONS)
- (15) PREFORMED PLASTIC PAVEMENT MARKING, TYPE B - LINE 8" WHITE DOTTED LINE (9' SKIP, 3' DASH)
- ◂ RAISED REFL PAVT MKR. ONE-WAY CRYSTAL MARKER

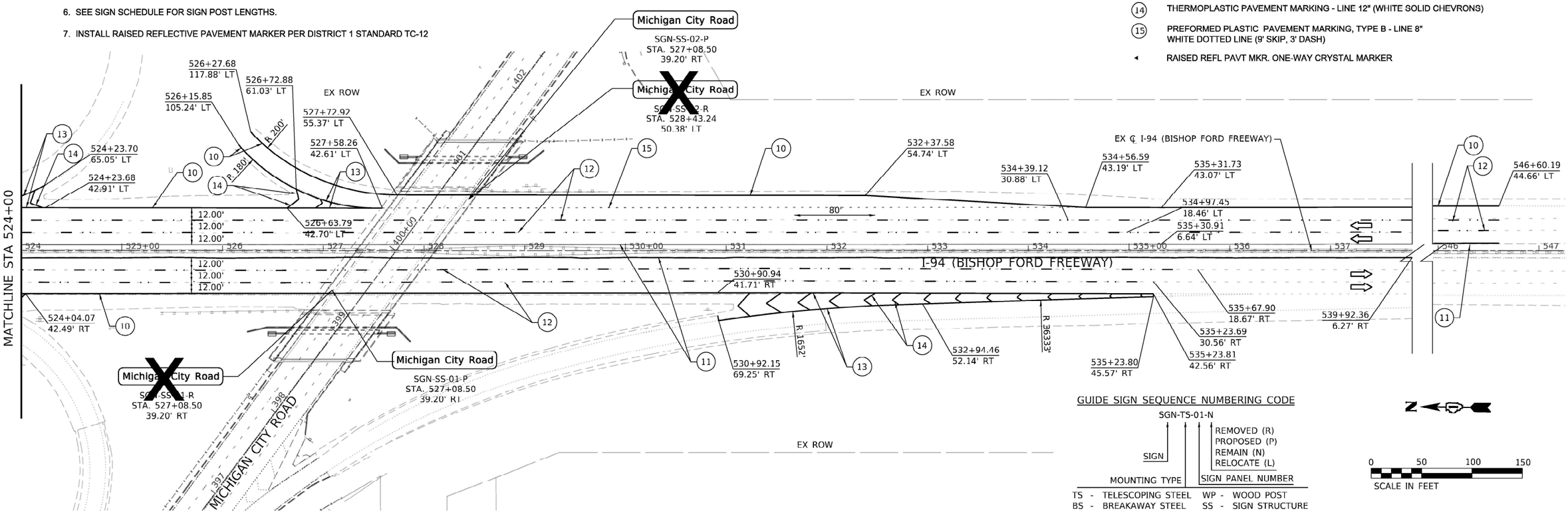

GUIDE SIGN SEQUENCE NUMBERING CODE

SGN-TS-01-N

- SIGN
- MOUNTING TYPE
- SIGN PANEL NUMBER
- REMOVED (R)
- PROPOSED (P)
- REMAIN (N)
- RELOCATE (L)

TS - TELESCOPING STEEL
BS - BREAKAWAY STEEL
WP - WOOD POST
SS - SIGN STRUCTURE

0 50 100 150
SCALE IN FEET

DELTA ENGINEERING GROUP, LLC
CONSULTING ENGINEERS, CONSTRUCTION MANAGERS, SURVEYORS
111 W JACKSON BLVD, SUITE 910
CHICAGO, IL 60604
T 312.377.7700, F 312.427 6145

USER NAME = denisb	DESIGNED - MA/DB	REVISED -
	DRAWN - DB	REVISED -
PLOT SCALE = 100.0000 ' / in.	CHECKED - MA	REVISED -
PLOT DATE = 12/20/2024	DATE - 12/13/2024	REVISED -

STATE OF ILLINOIS
DEPARTMENT OF TRANSPORTATION

MICHIGAN CITY ROAD OVER F.A.I. ROUTE 94
PAVEMENT MARKING AND SIGNING PLAN

SCALE: 1:50 | SHEET 02 OF 02 SHEETS | STA. 509+00.00 TO STA. 539+00.00

F.A.I. RTE.	SECTION	COUNTY	TOTAL SHEETS	SHEET NO.
94	FAI 94 22 STRUCTURE 2	COOK	157	43
		CONTRACT NO. 62R62		
		ILLINOIS FED. AID PROJECT		

MODEL: $MODELNAME$
FILE NAME: \\CHICAGO22sfanel\P22072C IDOT D1 FTB 204-001 Michigan City Rd Bridge\03A Design\C1 CADD\02 Sheet\RoadWay\040-D162R62-ch-Pvmt Mrkrg 02.dgn

PROPOSED EROSION CONTOL AND LANDSCAPING SCHEDULE

ALIGNMENT/LOCATION	FROM		TO		GEOTECH FAB FOR STAB (SQ YD)	SEEDING CL 2A (ACRE)	SEEDING CL 4A (ACRE)	NITROGEN FERT NUTR (POUND)	POTASSIUM FERT NUTR (POUND)	MULCH METHOD 2 (ACRE)	EROSION CONTR BLANKET (SQ YD)	SODDING SALT TOLERANT (SQ YD)	SUPPLE WATERING (UNIT)	TEMP EROS CONTR SEED (POUND)	PERIMETER EROS BAR (FOOT)	INLET FILTERS (EACH)	TEMP HD EROS CONTR BL (SQ YD)	SELECTIVE CLEARING (ACRE)
	STATION	OFFSET	STATION	OFFSET														
WB MCRB WEST OF BRIDGE	393+29.9	39.77 LT	398+75.8	38.42 LT						0.23	1459							
WB MCRB EAST OF BRIDGE	400+75.8	76.16 LT	403+72.4	41.41 LT						0.09	650							
EB MCRB EAST OF BRIDGE	401+70.7	34.58 RT	405+67.5	30.46 RT						0.09	743							
EB MCRB WEST OF BRIDGE	394+35.1	52.58 RT	399+30.1	34.58 RT						0.07	487							
WB MCRB WEST OF BRIDGE	397+89.0	95.44 LT	398+75.8	38.42 LT			0.05	0.10	0.10				125				229	0.1
WB MCRB EAST OF BRIDGE	400+75.8	76.16 LT	400+99.1	73.26 LT			0.03	0.10	0.10								103	
EB MCRB EAST OF BRIDGE	401+33.9	34.56 RT	401+94.0	64.97 RT			0.02	0.10	0.10				81				58	
EB MCRB WEST OF BRIDGE	398+93.1	70.35 RT	399+36.0	65.68 RT			0.03	0.10	0.10				81				135	0.1
WB MCRB WEST OF BRIDGE	396+39.85	82.11 LT	397+89.0	95.44 LT		0.18		0.10	0.10									0.1
WB MCRB EAST OF BRIDGE	400+99.1	73.26 LT	402+80.58	50.65 LT		0.07		0.10	0.10				314					0.1
EB MCRB EAST OF BRIDGE	401+70.65	34.58 RT	403+46.62	40.96 RT		0.08		0.10	0.10									0.1
EB MCRB WEST OF BRIDGE	398+20.39	39.17 RT	398+93.14	3.58 RT		0.04		0.10	0.10									0.1
WB MCRB WEST OF BRIDGE	393+70.54	39.77 LT	393+70.54	44.08 LT								7		1				
WB MCRB WEST OF BRIDGE	393+85.41	42.33 LT	398+75.76	38.42 LT								436	665	9				
EB MCRB WEST OF BRIDGE	393+80.53	50.73 RT	397+66.26	92.74 RT								257		6				
EB MCRB WEST OF BRIDGE	397+82.9	52.29 RT	39+38.85	45.93 RT								97	352	3				
WB MCRB EAST OF BRIDGE	400+75.81	76.16 LT	403+72.69	24.67 LT								328	68	7				
EB MCRB EAST OF BRIDGE	401+70.65	34.58 RT	405+67.51	30.46 RT								389	237	9				
WB MCRB WEST OF BRIDG	393+29.9	39.77 LT	393+70.5	44.08 LT											44			
WB MCRB EAST OF BRIDGE	393+85.4	42.33 LT	398+27.0	100.23 LT											538			
WB MCRB EAST OF BRIDGE	400+75.8	76.16 LT	403+72.3	49.28 LT											298			
EB MCRB EAST OF BRIDGE	401+83.8	62.64 RT	405+67.5	30.46 RT											390			
EB MCRB WEST BRIDGE	399+36.0	65.68 RT	398+13.1	64.23 RT											171			
EB MCRB WEST BRIDGE	394+35.1	52.58 RT	397+66.3	92.74 RT											384			
MCHIGAN CITY ROAD																12		
I-94 EB SHOULDER					240											6		
I-94 WB SHOULDER					482											5		
NOMINAL QUANTITY																		
TOTAL					725	0.50	0.25	90	90	0.50	3339	1514	962	35	1823	22	525	1

* NOMINAL QUANTITY FOR USE AS DIRECTED BY THE ENGINEER FOR SHOULDER REPAIRS

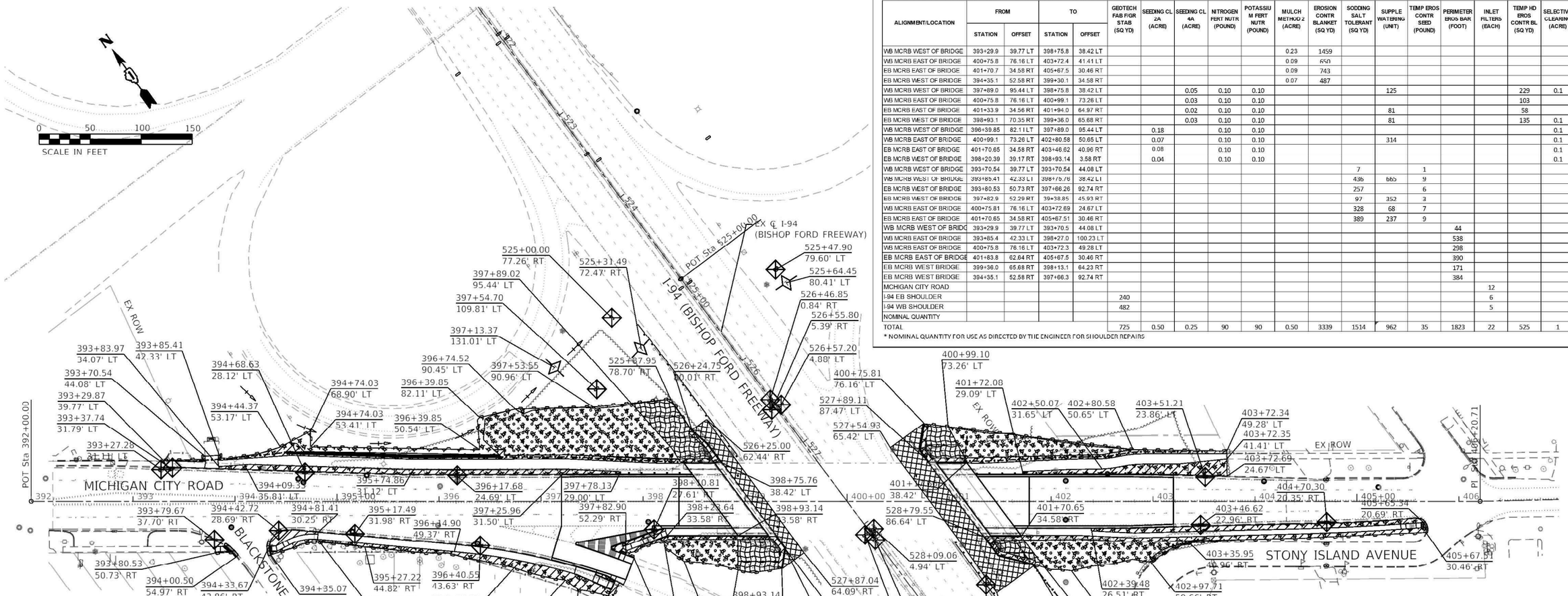

EROSION CONTROL GENERAL NOTES :

1. ALL ESC MEASURES WILL BE MAINTAINED IN ACCORDANCE WITH THE IDOT EROSION AND SEDIMENT CONTROL FIELD GUID FOR CONSTRUCTION INSPECTION FOUND ON THE CONTRUCTION TAB AT: HTTP://WWW.IDOT.ILLINOIS.GOV/CONTENT/DAM/SOI/EN/WEB/IDOT/DOCUMENTS/TRANSPORTATION-SYSTEM/MANUALS-GUIDES-AND HANDBOOKS/HIGHWAYS/ENVIRONMENT/EROSION-AND-SEDIMENT-CONTROL-FIELD-GUIDE-FOR-CONTRUCTION-INSPECTION.PDF
2. THE CONTRACTOR WILL ASSUME REPONSIBILITY FOR MAINTENANCE OF ALL SOIL EROSION CONTROL DURING CONTRUCTION.
3. THE CONTRACTOR SHALL CHECK ALL EXC MEASURES WEEKLY AND AFTER EACH RAINFALL, 0.5 INCHES OR GREATER IN A 24-HOUR PERIOD, OR EQUIVALENT SNOWFALL, ADDITIONALLY, FURING WINTER MONTHS, ALL MEASURE SHOULD BE CHECKED BY THE CONTRACTOR AFTER EACH SIGNIFICANT SNOWMELTS.
4. ANY LOOSE MATERIAL DEPOSITED IN THE FLOW LINE OF DRAINAGE STRUCTURES, WHICH OBSTRUCTS THE NATURAL FLOW OF WATER, SHALL BE REMOVED AT THE CLOSE OF EACH WORKING DAY, PRIOR TO ACCEPTANCE OF THE IMPROVEMENTM ALL DRAINAGE STRUCTURES SHALL BE FREE OF DIRT AND DEBRIS, THIS WORK WILL NOT BE PAID FOR SEPARATELY BUT SHALL BE CONSIDERED INCIDENTAL.
5. TEMPORARY OR PERMANENT STABILIZATION SHALL BE INITIATED IMMEDIATELY UPON COMPLETION OF DISTURBANCE OR IF THE OWK AREA IS TO BE LEFT UNDISTURBED FOR 14 DAYS OR MORE.
6. UNDER NO CIRCUMSTANCES SHALL THE CONTRACTOR PROLONG FINAL GRADING AND SHAPING SO THAT THE ENTIRE PROJECT CAN BE PERMANENTLY SEEDED AT ONE TIME.
7. THE CONTRACTOR IS REPONSIBLE FOR INSTALLATION OF ANY ADDITIONAL EROSION CONTROL MEASURES NECESSARY TO PREVENT EROSION AND SEDIMENTATION AS DETERMINED BY THE RESIDENT ENGINEER.
8. THE CONTRACTOR SHALL PROVIDE THE RE A PLAN TO ENSURE THAT A STABILIZED FLOW LINE WILL BE PROVIDED DURING STORM SEWER CONSTRUCTION. IF USE OF A STABILIZED FLOW LINE BETWEEN INSTALLED STORM SEWE AND OPEN DISTURBANCE WILL REDUCE THE POTENTIAL FOR THE OFFSITE DISCHARGE OF SEDIMENT-BEARING WATERSM ESPECIALLY WHEN RAIN IS FORECASTED, SO THAT FLOW WILL NOT ERODE. LACK OF APPROVED PLAN OR FAILURE TO COMPLY WILL RESULT IN AN ESC DEFICIENCY DEDUCTION.

LEGEND : LANDSCAPING

- SODDING, SALT TOLERANT ; FERTILIZER NUTRIENTS;
- SEEDING, CLASS 2A; 4" TOPSOIL , FERTILIZER NUTRIENTS; EROSION CONTROL BLANKET
- SEEDING, CLASS 4A; 4" TOPSOIL , FERTILIZER NUTRIENTS; EROSION CONTROL BLANKET
- AGGREGATE SHOULDERS, TYPE B 6"; GEOTECHNICAL FABRIC

LEGEND : EROSION CONTROL

- MULCH, METHOD 2; TEMP EROS CONTROL SEED, EROSION CONTROL BLANKET
- TEMP HEAVY EROSION CONTROL BLANKET, MULCH METHOD 2, TEMP EROS CONTROL SEED
- PERIMETER EROSION BARRIER
- INLET FILTERS/PROTECTION
- TEMPORARY DITCH CHECK
- DITCH FLOWLINE

NOTES
1. INLET FILTERS TO BE USED IN ALL INLETS LOCATED IN PAVED AREAS.
2. EROSION CONTROL ITEMS TO REMAIN IN PLACE UNTIL ALL STAGES OFWORK IN AFFECTED AREA ARE COMPLETED AND GROUND COVER IS ESTABLISHED.

MODEL: SMOKENAMES
FILE NAME: G:\JP220720 IDOT D1 PTB 204-031 Michigan City Rd Bridge\03A Design\01 CADD\02 Sheet\Roadway\041-D162R62-sht-EROS 01.dgn

DELTA ENGINEERING GROUP, LLC
CONSULTING ENGINEERS, CONSTRUCTION MANAGERS, SURVEYORS
111 W JACKSON BLVD, SUITE 910
CHICAGO, IL 60604
T 312.377.7700, F 312.427.6145

USER NAME = denisb	DESIGNED - MA/DB	REVISED -
	DRAWN - DB	REVISED -
PLOT SCALE = 100.0045 ' / in.	CHECKED - MA	REVISED -
PLOT DATE = 2/28/2025	DATE - 12/13/2024	REVISED -

STATE OF ILLINOIS
DEPARTMENT OF TRANSPORTATION

MICHIGAN CITY ROAD OVER F.A.I. ROUTE 94
EROSION CONTROL AND LANDSCAPE PLAN

SCALE: 1:50 | SHEET 01 OF 01 SHEETS | STA. 392+00.00 TO STA. 401+50.00

F.A.I. RTE.	SECTION	COUNTY	TOTAL SHEETS	SHEET NO.
94	FAI 94 22 STRUCTURE 2	COOK	157	44
		CONTRACT NO. 62R62		
	ILLINOIS	FED. AID PROJECT		

DRAINAGE PIPE CLEANING SCHEDULE

ALIGNMENT	UPSTREAM STATION	UPSTREAM OFFSET	DOWNSTREAM STATION	DOWNSTREAM OFFSET	STRUCTURE TYPE	SIZE	LENGTH
MCRB WEST OF BRIDGE	393+96.34	25.34 RT	395+15.09	29.65 RT	STORM SEWER	12	120
MCRB WEST OF BRIDGE	395+98.94	23.53 RT	398+05.11	20.03 RT	STORM SEWER	18	206
MCRB WEST OF BRIDGE	395+15.09	29.65 RT	393+96.34	25.34 RT	STORM SEWER	12	73
MCRB WEST OF BRIDGE	396+37.65	41.39 RT	395+98.94	23.53 RT	STORM SEWER	12	42
MCRB WEST OF BRIDGE	396+17.83	20.45 LT	396+00.76	15.11 LT	STORM SEWER	12	17
MCRB WEST OF BRIDGE	396+00.76	15.11 LT	395+98.94	23.53 RT	STORM SEWER	12	39
MCRB EAST OF BRIDGE	402+14.44	20.08 LT	404+08.78	19.69 LT	STORM SEWER	15	194
MCRB EAST OF BRIDGE	404+08.78	19.69 LT	406+04.56	22.04 LT	STORM SEWER	15	196
MCRB EAST OF BRIDGE	402+14.25	17.96 RT	402+14.44	20.08 LT	STORM SEWER	15	38
MCRB EAST OF BRIDGE	404+70.30	20.35 RT	404+69.67	21.08 LT	STORM SEWER	12	41
MCRB EAST OF BRIDGE	404+69.89	41.78 RT	404+70.30	20.35 RT	STORM SEWER	12	21
					TOTAL		987

PROPOSED DRAINAGE STRUCTURE SCHEDULE

STRUCTURE NO.	ALIGNMENT	STATION	OFFSET	RIM ELEV	UNIT EACH	INVERT ELEVATIONS NORTH	SOUTH	EAST	WEST	PAY ITEM DESCRIPTION
S-101	EB MICHIGAN CITY RD	398+13.14	26.00 RT	613.28	1			607.66		CATCH BASINS, TYPE A, 4' DIA, TYP 1 FRAME, OPEN LID
S-102	WB MICHIGAN CITY RD	401+80.64	24.00 LT	613.35	1		595.95			CATCH BASINS, TYPE A, 4' DIA, TYP 1 FRAME, OPEN LID

PROPOSED DRAINAGE PIPE SCHEDULE

PIPE NO	ALIGNMENT	FROM STATION	OFFSET	TO STATION	OFFSET	PAY ITEM DESCRIPTION	LENGTH (FT)	SLOPE (%)
P-101	EB MICHIGAN CITY RD	398+05.19	20.08 RT	398+13.14	26.00 RT	STORM SEWRS, CLASS A, TYPE 2, 12"	10	0.5
P-102	WB MICHIGAN CITY RD	401+80.64	24.00 LT	402+14.47	20.07 LT	STORM SEWRS, CLASS A, TYPE 2, 12"	34	0.5

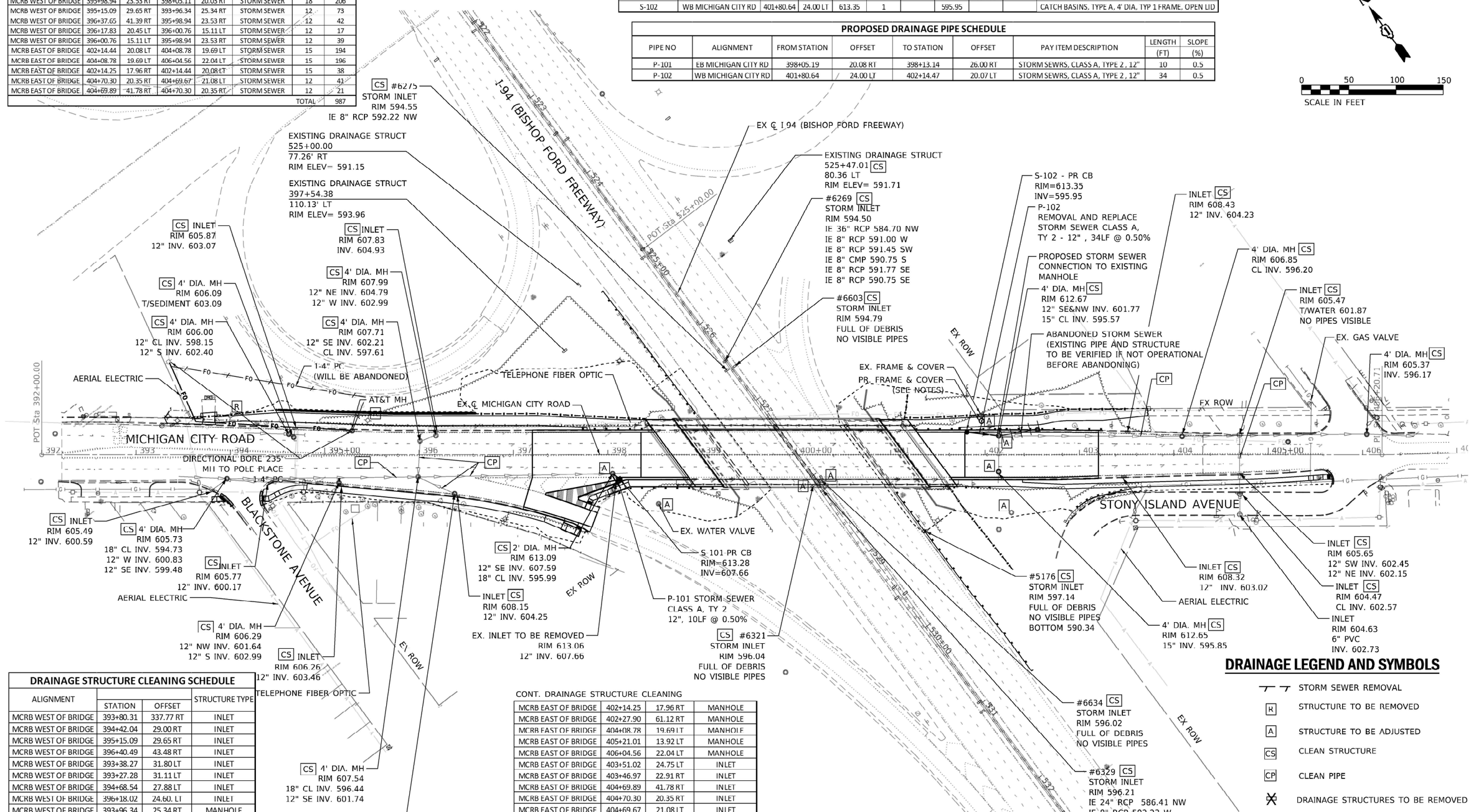

DRAINAGE STRUCTURE CLEANING SCHEDULE

ALIGNMENT	STATION	OFFSET	STRUCTURE TYPE
MCRB WEST OF BRIDGE	393+80.31	337.77 RT	INLET
MCRB WEST OF BRIDGE	394+42.04	29.00 RT	INLET
MCRB WEST OF BRIDGE	395+15.09	29.65 RT	INLET
MCRB WEST OF BRIDGE	396+40.49	43.48 RT	INLET
MCRB WEST OF BRIDGE	393+38.27	31.80 LT	INLET
MCRB WEST OF BRIDGE	393+27.28	31.11 LT	INLET
MCRB WEST OF BRIDGE	394+68.54	27.88 LT	INLET
MCRB WEST OF BRIDGE	396+18.02	24.60 LT	INLET
MCRB WEST OF BRIDGE	393+96.34	25.34 RT	MANHOLE
MCRB WEST OF BRIDGE	395+15.09	29.65 RT	MANHOLE
MCRB WEST OF BRIDGE	396+37.65	41.39 RT	MANHOLE
MCRB WEST OF BRIDGE	398+05.11	20.03 RT	MANHOLE
MCRB WEST OF BRIDGE	394+61.78	21.91 LT	MANHOLE
MCRB WEST OF BRIDGE	394+67.01	18.66 LT	MANHOLE
MCRB EAST OF BRIDGE	402+14.44	20.08 LT	MANHOLE

CONT. DRAINAGE STRUCTURE CLEANING

MCRB EAST OF BRIDGE	402+14.25	17.96 RT	MANHOLE
MCRB EAST OF BRIDGE	402+27.90	61.12 RT	MANHOLE
MCRB EAST OF BRIDGE	404+08.78	19.69 LT	MANHOLE
MCRB EAST OF BRIDGE	405+21.01	13.92 LT	MANHOLE
MCRB EAST OF BRIDGE	406+04.56	22.04 LT	MANHOLE
MCRB EAST OF BRIDGE	403+51.02	24.75 LT	INLET
MCRB EAST OF BRIDGE	403+46.97	22.91 RT	INLET
MCRB EAST OF BRIDGE	404+69.89	41.78 RT	INLET
MCRB EAST OF BRIDGE	404+70.30	20.35 RT	INLET
MCRB EAST OF BRIDGE	404+69.67	21.08 LT	INLET
I-94 EB SHOULDER	525+36.60	130.97 RT	INLET
I 94 WB SHOULDER	525+46.79	80.50 LT	INLET
I-94 MEDIAN	526+46.85	0.84 RT	INLET
I-94 MEDIAN	526+55.80	5.39 RT	INLET
I-94 MEDIAN	526+57.20	4.88 LT	INLET
I-94 MEDIAN	528+08.56	5.47 RT	INLET

DRAINAGE LEGEND AND SYMBOLS

- STORM SEWER REMOVAL
- R — STRUCTURE TO BE REMOVED
- A — STRUCTURE TO BE ADJUSTED
- CS — CLEAN STRUCTURE
- CP — CLEAN PIPE
- DRAINAGE STRUCTURES TO BE REMOVED
- PROPOSED CATCH BASIN
- ABANDONED STORM SEWER

NOTE

1. EXCAVATE MANHOLE, REMOVE COLLAR, PLACE NEW COLLAR SO FRAME AND COVER IS UNDER PROPOSED MULTI-USE PATH (SEE DETAILS ON CROSS SECTIONS)

MODEL: $MODELNAME$
FILE NAME: \\CHICAGO22\shares\P220720 IDOT D1 PTB 204-001 Michigan City 4d Bridge\03A Design\C1 CADD\C2 Sheet\Roadway\042-D162R62-sh-Drain 01.dgn

DELTA ENGINEERING GROUP, LLC
CONSULTING ENGINEERS, CONSTRUCTION MANAGERS, SURVEYORS
111 W JACKSON BLVD, SUITE 910
CHICAGO, IL 60604
T 312.377.7700, F 312.427 6145

USER NAME = denisb	DESIGNED - MA/DB	REVISED -	
	DRAWN - DB	REVISED -	
PLOT SCALE = 100.0045 ' / in.	CHECKED - MA	REVISED -	
PLOT DATE = 12/20/2024	DATE - 12/13/2024	REVISED -	

STATE OF ILLINOIS
DEPARTMENT OF TRANSPORTATION

MICHIGAN CITY ROAD OVER I-94
EXISTING DRAINAGE AND PROPOSED UTILITY PLANS

SCALE: 1:50 | SHEET 01 OF 01 SHEETS | STA. 392+00.00 TO STA. 401+50.00

F.A.I. RTE.	SECTION	COUNTY	TOTAL SHEETS	SHEET NO.
94	FAI 94 22 STRUCTURE 2	COOK	157	45

CONTRACT NO. 62R62
ILLINOIS | FED. AID PROJECT

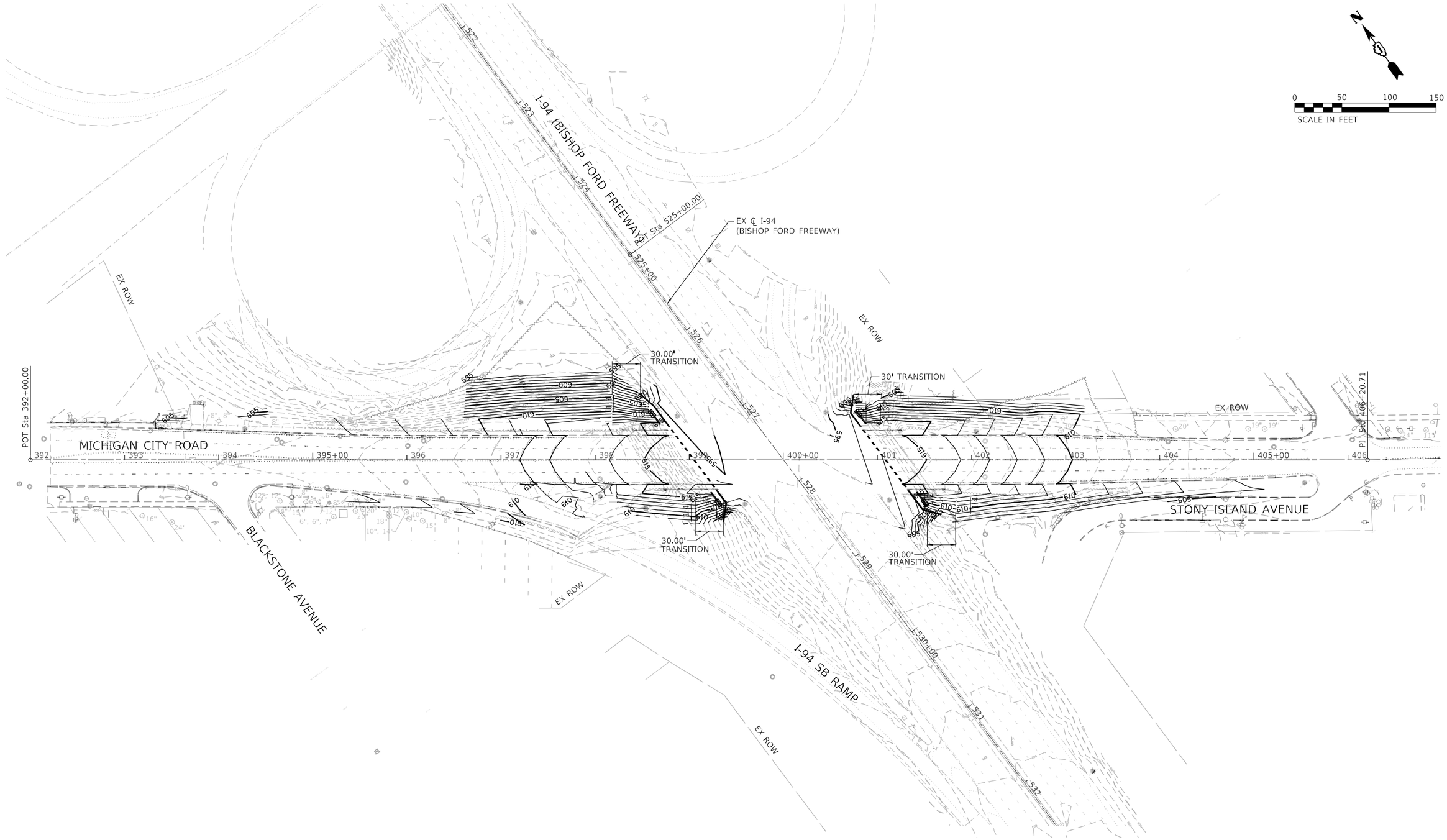

MODEL: $MODELNAMES
FILE NAME: \\CHICAGO22-share\IP220720 IDOT D1 PTB 204-001 Michigan City Rd Bridge\03A Design\01 CADD\02 Sheet\Roadway\043-D162R62-in-GRADING-01.dgn

DELTA ENGINEERING GROUP, LLC CONSULTING ENGINEERS, CONSTRUCTION MANAGERS, SURVEYORS 111 W JACKSON BLVD, SUITE 910 CHICAGO, IL 60604 T 312.377.7700, F 312.427 6145	USER NAME = denisb	DESIGNED - MA/DB	REVISED -	**STATE OF ILLINOIS** **DEPARTMENT OF TRANSPORTATION**	MICHIGAN CITY ROAD OVER F.A.I. ROUTE 94 PROPOSED GRADING PLAN
		DRAWN - DB	REVISED -		
	PLOT SCALE = 100.0045 ' / in.	CHECKED - MA	REVISED -		
	PLOT DATE = 12/13/2024	DATE - 12/13/2024	REVISED -		

SCALE: 1:50 | SHEET 01 OF 01 SHEETS | STA. N/A TO STA. N/A

F.A.I. RTE.	SECTION	COUNTY	TOTAL SHEETS	SHEET NO.
94	FAI 94 22 STRUCTURE 2	COOK	157	46
		CONTRACT NO. 62R62		
	ILLINOIS	FED. AID PROJECT		

GENERAL NOTES:

1. ALL UNDERGROUND UNIT DUCT SHALL BE 30 INCHES MINIMUM BELOW GRADE.
2. NO LIGHTING CIRCUIT OR PORTION THEREOF SHALL BE REMOVED FROM NIGHT TIME OPERATION OF EXISTING LIGHTING WITHOUT THE APPROVAL OF THE ENGINEER. ALL EXISTING LIGHTING SHALL OPERATE FROM DUSK TO DAWN DAILY FOR DURATION OF THE PROJECT TO MAINTAIN ILLUMINATION OF TRAVELED ROADWAYS.
3. PROPOSED COUNTERWEIGHT MUST MATCH THE WEIGHT OF THE PROPOSED LED HIGH MAST LUMINAIRE.
4. THE EXISTING LIGHT TOWERS ARE "T" STYLE ARMS. THERE ARE 6 ARMS WHICH CAN ACCOMODATE TWO LUMINAIRES ON EACH ARM. CONTRACTOR SHALL VERIFY THE PROPOSED LUMINAIRES WILL FIT WITH THE TENON ARMS AND NOT RUB AGAINST EACH OTHER OR IS TOO BIG OF A LUMINAIRE HOUSING. CONTRACTOR TO DEMONSTRATE IN THE FIELD BY INSTALLING TWO PROPOSED LED LUMINAIRES SIDE BY SIDE BEFORE PURCHASING THE ENTIRE QUANTITY OF LUMINAIRES.

CONTACT NOTES:

1. CALL JULIE OR DIGGER FOR CABLE LOCATES, CALL IDOT EMC AT (708) 524-2145 FOR IDOT MAINTAINED CABLE LOCATES.

REMOVAL NOTES:

1. ALL SALVAGE EXISTING EQUIPMENT INCLUDING, LUMINAIRES, SHALL BE RETURNED TO STATE STOCK. THE EXISTING COUNTERWEIGHTS ON THE TOWER TENON ARMS SHALL ALSO BE REMOVED WHEN THE EXISITNG HPS LUMINAIRES ARE REMOVED. THE EXISTING CONTERWEIGHTS SHOULD BE SCRAPPED.THE CONTRACTOR SHALL CALL EMC AT (708) 524-2145 FOR MORE DETAILS AND DELIVERY PLACE.
2. LOCATIONS SELECTED FOR COLLECTION OF DEBRIS AND/OR STORAGE OF EQUIPMENT SHALL BE AS APPROVED BY THE ENGINEER.

SYMBOL LEGEND:

- (E) — REPLACE EXISTING HIGH MAST LUMINAIRES WITH LED (59,000 LUMENS MINIMUM), AND NEW COUNTERWEIGHT HPS LUMINAIRES TO BE SALVAGED TO IDOT OR OTHERWISE INDICATED - NUMBER OF FIXTURES SHOWN ON PLAN
- EXISTING UNIT DUCT, SIZE AS PER PLANS
- UNDERGROUND CONDUIT, GALVANIZED STEEL, 4" DIA.
- PROPOSED UNIT DUCT, SIZE AS PER PLANS
- EXISTING IDOT LIGHTING CONTROLLER TO REMAIN
- RL — RELOCATED LIGHT POLE AND MAST ARM ON PROPOSED METAL FOUNDATION, 10" X 8' LONG BREAKAWAY DEVICE, TRANSFORMER BASE, 15 INCH BOLT CIRCLE LUMINAIRE, LED, ROADWAY, OUTPUT DESIGNATION H, 4000 KELVIN (26,000 LUMENS MINIMUM), LUMINAIRE SAFETY CABLE ASSEMBLY
- (R) — REMOVE AND RELOCATE LIGHT POLE ON NEW FOUNDATION
- (E) — EXISTING LIGHT POLE TO REMAIN, REPLACE HPS LUMINAIRE TO LED
- PROPOSED UNDERPASS LUMINAIRE, LUMINAIRE, LED, UNDERPASS, SUSPENDED, OUTPUT DESIGNATION D
- EXISTING UNDERPASS LUMINAIRE TO BE REMOVED
- JB — JUNCTION BOX, SIZE AS SHOWN ON PLAN

ABBREVIATIONS:

E	EXISTING TO REMAIN
E.O.P.	EDGE OF PAVEMENT
FT	FEET OR FOOT
GND	GROUND
JB	JUNCTION BOX
MA	MAST ARM
NO.	NUMBER
N.T.S.	NOT TO SCALE
P	PROPOSED
PVC	POLYVINYL CHLORIDE
RGS	RIGID GALVANISED STEEL
R	REMOVE
STA.	STATION
U.N.O.	UNLESS NOTED OTHERWISE
HPS	HIGH PRESSURE SODIUM

Location	Cabinet Main Route	Cabinet Nearest Cross Street	County	Controller	Total Tower Qty	Total Lum. Qty	Towers Qua-nity	Quanity of Luminaires 400W	#	Height	Make Shaft / LD	Lower Device	Year Installed	GPS Latitude	Longitude
1032	I-94	147th St	Cook	G1	15	113	1	8	8G1AB1	100'	Summit / American	Int	1988	41.622046	-87.578574
							1	8	8G1AB2	100'	Summit / American	Int	1988	41.622219	-87.577769
							1	6	6G1AB3	100'	Summit / American	Int	1988	41.622414	-87.576783
							1	8	8G1CD1	100'	Summit / American	Int	1988	41.622996	-87.578577
							1	8	8G1CD2	100'	Summit / American	Int	1988	41.623528	-87.577866
							1	8	8G1CD3	100'	Summit / American	Int	1988	41.62416	-87.578596
							1	8	8G1CD4	100'	Summit / American	Int	1988	41.622994	-87.577365
							1	8	8G1EF1	100'	Summit / American	Int	1988	41.622478	-87.579291
							1	8	8G1EF2	100'	Summit / American	Int	1988	41.622923	-87.580574
							1	8	8G1EF3	100'	Summit / American	Int	1988	41.623676	-87.580157
							1	8	8G1EF4	100'	Summit / American	Int	1988	41.623936	-87.579338
							1	5	5G1EF5	100'	Summit / American	Int	1988	41.625543	-87.579401
							1	8	8G1GH1	100'	Summit / American	Int	1988	41.622217	-87.580113
							1	8	8G1GH2	100'	Summit / American	Int	1988	41.621478	-87.579295
							1	6	6G1GH3	100'	Summit / American	Int	1988	41.620612	-87.578689

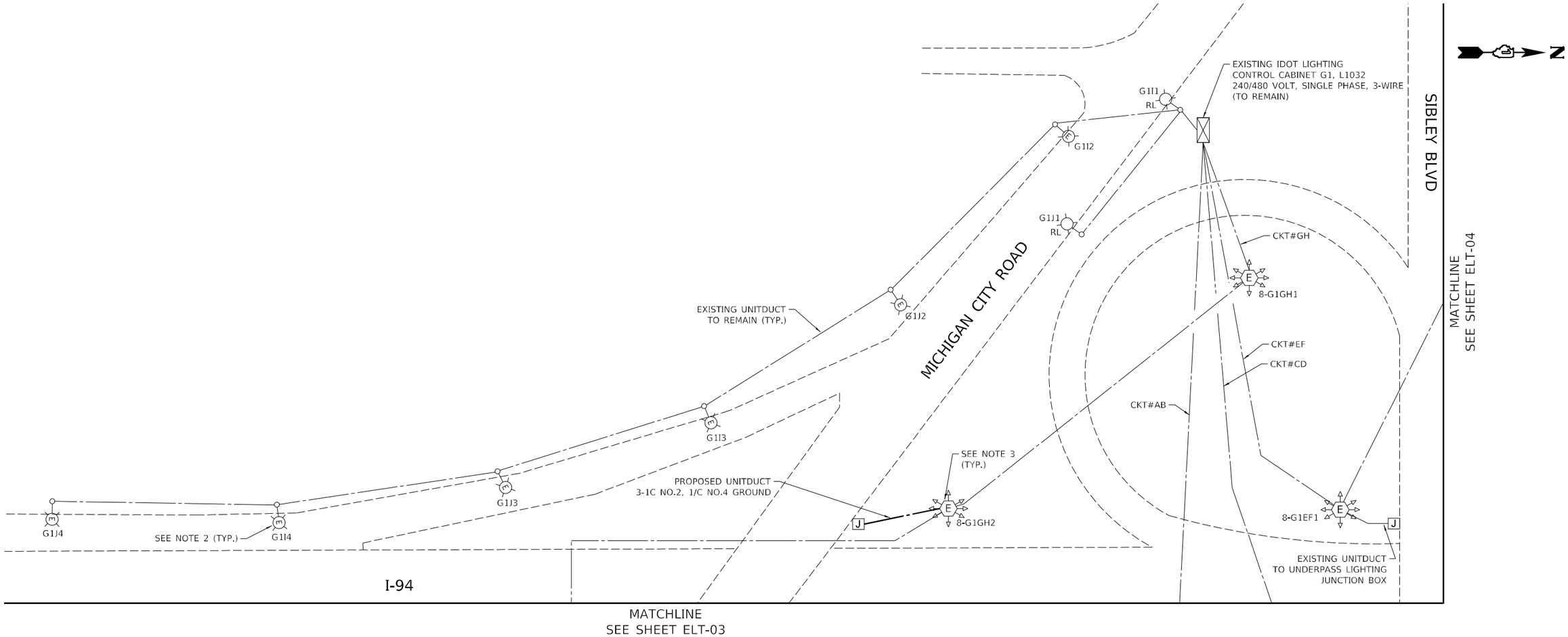

DESCRIPTION	UNIT	QTY
LUMINAIRE, LED, ROADWAY, REPLACEMENT, OUTPUT DESIGNATION H	EACH	8
LUMINAIRE, LED, HIGHMAST, OUTPUT DESIGNATION J	EACH	24
REMOVAL OF HIGH MAST LUMINAIRES, SALVAGE	EACH	24
REMOVAL OF LUMINAIRE, SALVAGE	EACH	8
LUMINAIRE SAFETY CABLE ASSEMBLY	EACH	8
HIGH MAST LUMINAIRE COUNTERWEIGHT	EACH	12
UNIT DUCT, 600V, 3-1C NO.2, 1/C NO.4 GROUND, (XLP-TYPE USE), 1 1/2" DIA. POLYETHYLENE	FOOT	100

NOTES:

1. REFER TO REMOVAL NOTES ON SHEET ELT-01.
2. CONTRACTOR TO REPLACE EXISTING ROADWAY HPS LUMINAIRES TO LED LUMINAIRES, LUMINAIRE, LED, ROADWAY. OUTPUT DESIGNATION H (TYP.). 4000 KELVIN. INSTALL LUMINAIRE SAFETY CABLE. EXISTING HPS LUMINAIRE SALVAGE TO IDOT. ALSO REPLACE THE POLE WIRE, FUSES AND ADD POLE GROUND WIRE.
3. CONTRACTOR TO REPLACE EXISTING HIGHMAST HPS LUMINAIRES TO LED LUMINAIRES, LUMINAIRE, LED, HIGHMAST, OUTPUT DESIGNATION J (TYP.), 4000 KELVIN. EXISTING HPS LUMINAIRE SALVAGE TO IDOT. CONTRACTOR TO MATCHLED LUMINAIRE ORIENTATIONS WITH THE EXISTING HPS LUMINAIRE ORIENTATIONS. CONTRACTOR TO REMOVE THE EXISTING COUNTERWEIGHTS, NO SALVAGE. CONTRACTOR TO INSTALL NEW COUNTERWEIGHTS TO MATCH THE WEIGHT OF THE LED LUMANAIRE.

MODEL: $MODELNAME$
FILE NAME: $FILEN$

DELTA ENGINEERING GROUP, LLC
CONSULTING ENGINEERS, CONSTRUCTION MANAGERS, SURVEYORS
111 W JACKSON BLVD, SUITE 910
CHICAGO, IL 60604
T 312.377.7700, F 312.427 6145

USER NAME = $USER$	DESIGNED - KK/HM	REVISED -	
	DRAWN - AM/KK	REVISED -	
PLOT SCALE = $SCALE$	CHECKED - LF	REVISED -	
PLOT DATE = $DATE$	DATE - 03/05/2025	REVISED -	

STATE OF ILLINOIS
DEPARTMENT OF TRANSPORTATION

MICHIGAN CITY ROAD OVER I-94
INTERCHANGE LIGHTING PLAN

SCALE: | SHEET OF SHEETS | STA. TO STA.

ELT-02

F.A.I. RTE.	SECTION	COUNTY	TOTAL SHEETS	SHEET NO.
94	FAI 94 22 STRUCTURE 2	COOK	157	48
		CONTRACT NO. 62R62		
	ILLINOIS	FED. AID PROJECT		

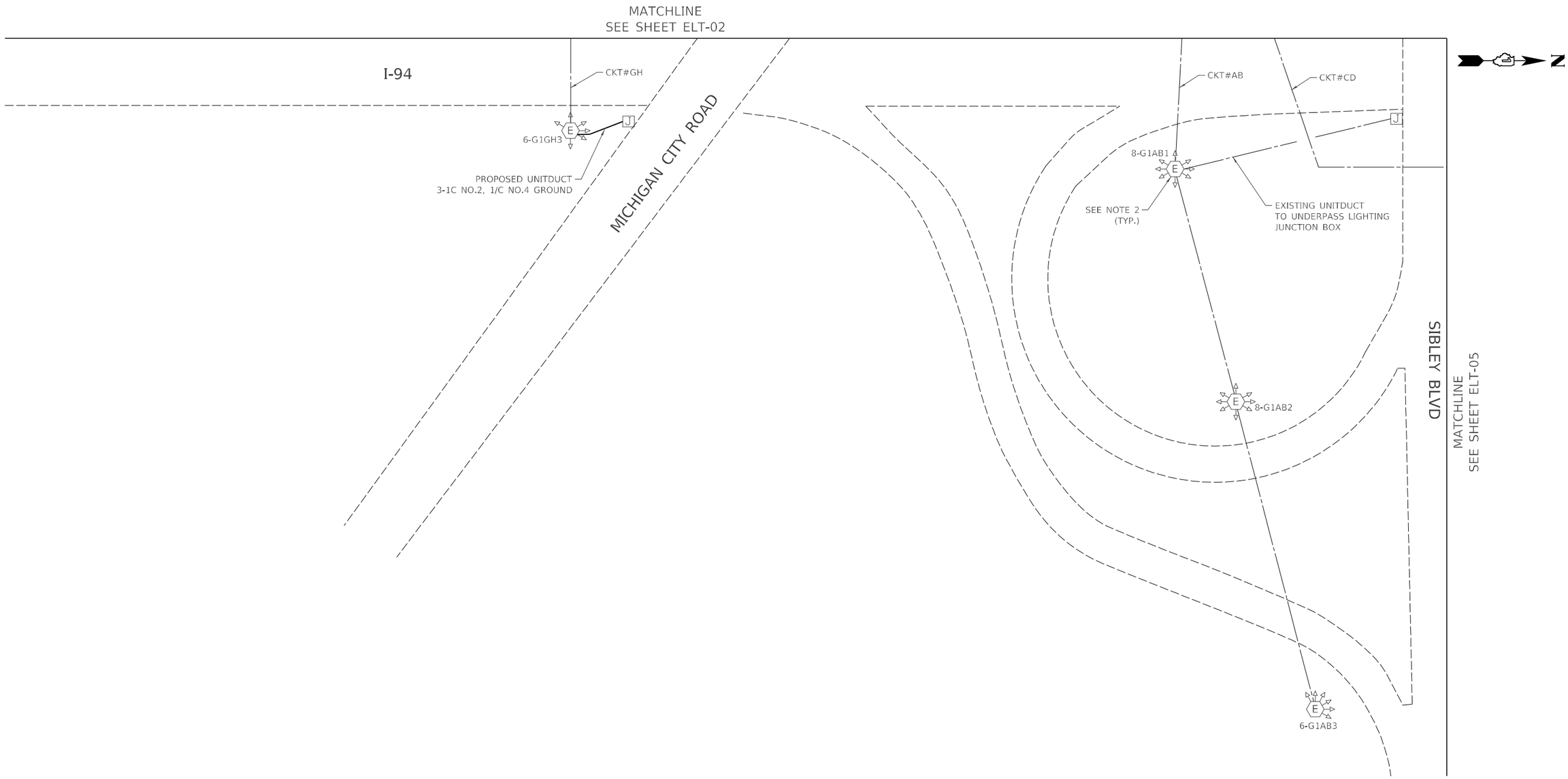

NOTES:

1. REFER TO REMOVAL NOTES ON SHEET ELT-01.

2. CONTRACTOR TO REPLACE EXISTING HIGHMAST HPS LUMINAIRES TO LED LUMINAIRES, LUMINAIRE, LED, HIGHMAST, OUTPUT DESIGNATION J (TYP.), 4000 KELVIN. EXISTING HPS LUMINAIRE SALVAGE TO IDOT. CONTRACTOR TO MATCHLED LUMINAIRE ORIENTATIONS WITH THE EXISTING HPS LUMINAIRE ORIENTATIONS. CONTRACTOR TO REMOVE THE EXISTING COUNTERWEIGHTS, NO SALVAGE. CONTRACTOR TO INSTALL NEW COUNTERWEIGHTS TO MATCH THE WEIGHT OF THE LED LUMANAIRE.

DESCRIPTION	UNIT	QTY
LUMINAIRE, LED, HIGHMAST, OUTPUT DESIGNATION J	EACH	28
REMOVAL OF HIGH MAST LUMINAIRES, SALVAGE	EACH	28
HIGH MAST LUMINAIRE COUNTERWEIGHT	EACH	20
UNIT DUCT, 600V, 3-1C NO.2, 1/C NO.4 GROUND, (XLP-TYPE USE), 1 1/2" DIA. POLYETHYLENE	FOOT	100

MODEL: $MODELNAME$
FILE NAME: G:\P230720 IDOT D1 PTB 204-001 Michigan City Rd Bridge\03A Design\01 CADD\02 Sheets\Lighting\D162R62-ctrELT-03.dgn

DELTA ENGINEERING GROUP, LLC
CONSULTING ENGINEERS, CONSTRUCTION MANAGERS, SURVEYORS
111 W JACKSON BLVD, SUITE 910
CHICAGO, IL 60604
T 312.377.7700, F 312.427 6145

USER NAME = rmanucod	DESIGNED - KK/HM	REVISED -	
	DRAWN - AM/KK	REVISED -	
PLOT SCALE = 0.200 ' / in.	CHECKED - LF	REVISED -	
PLOT DATE = 12/13/2024	DATE - 12/13/2024	REVISED -	

STATE OF ILLINOIS
DEPARTMENT OF TRANSPORTATION

MICHIGAN CITY ROAD OVER I-94
INTERCHANGE LIGHTING PLAN

SCALE: | SHEET OF SHEETS | STA. TO STA.

F.A.I. RTE.	SECTION	COUNTY	TOTAL SHEETS	SHEET NO.
94	FAI 94 22 STRUCTURE 2	COOK	157	49
		CONTRACT NO. 62R62		
		ILLINOIS	FED. AID PROJECT	

ELT-03

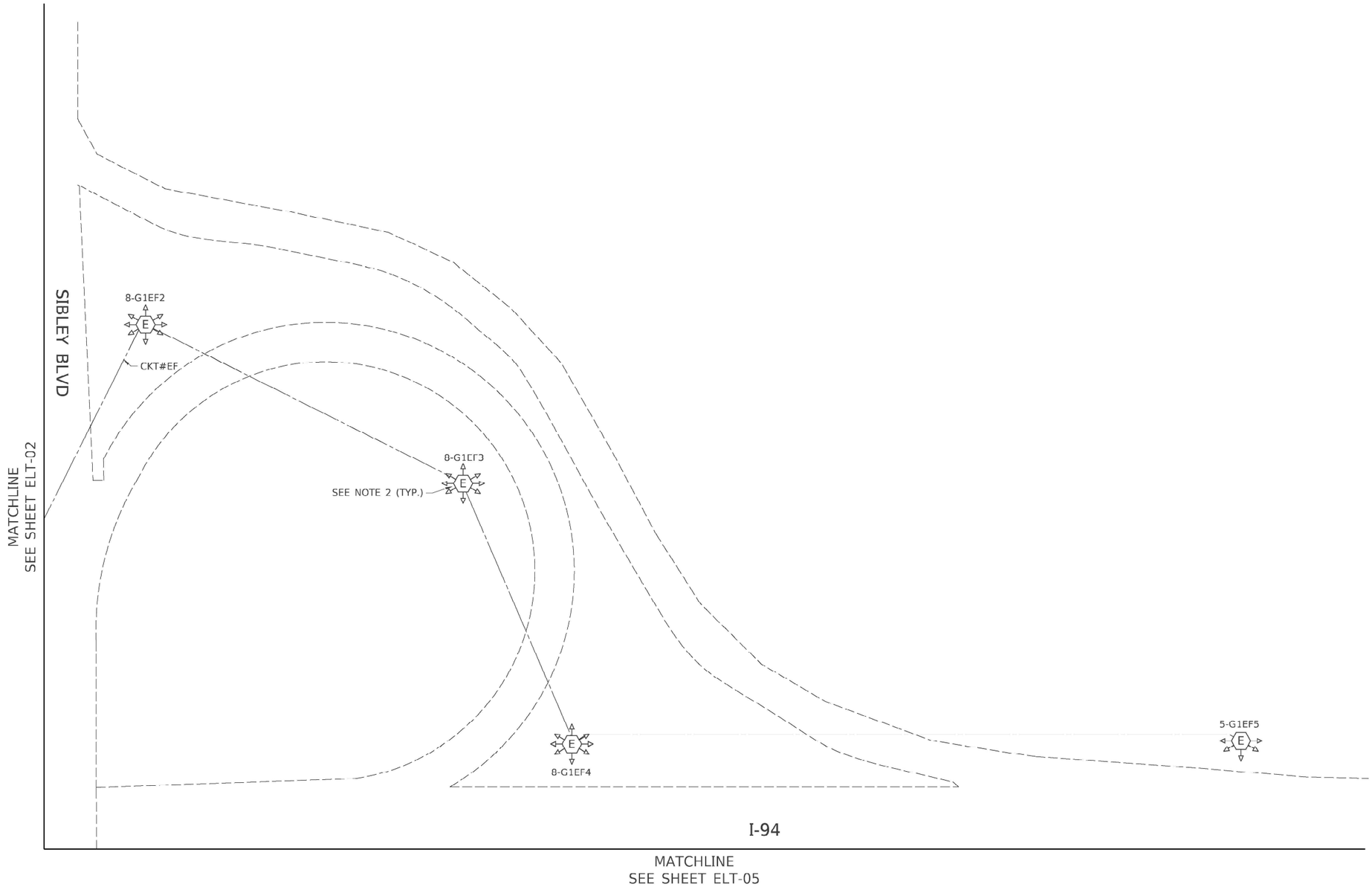

NOTES:

1. REFER TO REMOVAL NOTES ON SHEET ELT-01.

2. CONTRACTOR TO REPLACE EXISTING HIGHMAST HPS LUMINAIRES TO LED LUMINAIRES. LUMINAIRE, LED, HIGHMAST, OUTPUT DESIGNATION J (TYP.), 4000 KELVIN. EXISTING HPS LUMINAIRE SALVAGE TO IDOT. CONTRACTOR TO MATCHLED LUMINAIRE ORIENTATIONS WITH THE EXISTING HPS LUMINAIRE ORIENTATIONS. CONTRACTOR TO REMOVE THE EXISTING COUNTERWEIGHTS, NO SALVAGE. CONTRACTOR TO INSTALL NEW COUNTERWEIGHTS TO MATCH THE WEIGHT OF THE LED LUMANAIRE.

DESCRIPTION	UNIT	QTY
LUMINAIRE, LED, HIGHMAST, OUTPUT DESIGNATION J	EACH	29
REMOVAL OF HIGH MAST LUMINAIRES, SALVAGE	EACH	29
HIGH MAST LUMINAIRE COUNTERWEIGHT	EACH	19

MODEL: $MODELNAME$
FILE NAME: G:\LP20720 IDOT D1 PTB 204-001 Michigan City Rd Bridge\03A Design\01 CADD\02 Sheets\Lighting\D162462-sht-ELT-04.dgn

ELT-04

DELTA ENGINEERING GROUP, LLC
CONSULTING ENGINEERS, CONSTRUCTION MANAGERS, SURVEYORS
111 W JACKSON BLVD, SUITE 910
CHICAGO, IL 60604
T 312.377.7700, F 312.427 6145

USER NAME = rmamucod	DESIGNED - KK/HM	REVISED -	
	DRAWN - AM/KK	REVISED -	
PLOT SCALE = 0.200 ' / in.	CHECKED - LF	REVISED -	
PLOT DATE = 12/13/2024	DATE - 12/13/2024	REVISED -	

STATE OF ILLINOIS
DEPARTMENT OF TRANSPORTATION

MICHIGAN CITY ROAD OVER I-94
INTERCHANGE LIGHTING PLAN

SCALE: SHEET OF SHEETS STA. TO STA.

F.A.I. RTE.	SECTION	COUNTY	TOTAL SHEETS	SHEET NO.
94	FAI 94 22 STRUCTURE 2	COOK	157	50
		CONTRACT NO. 62R62		
		ILLINOIS FED. AID PROJECT		

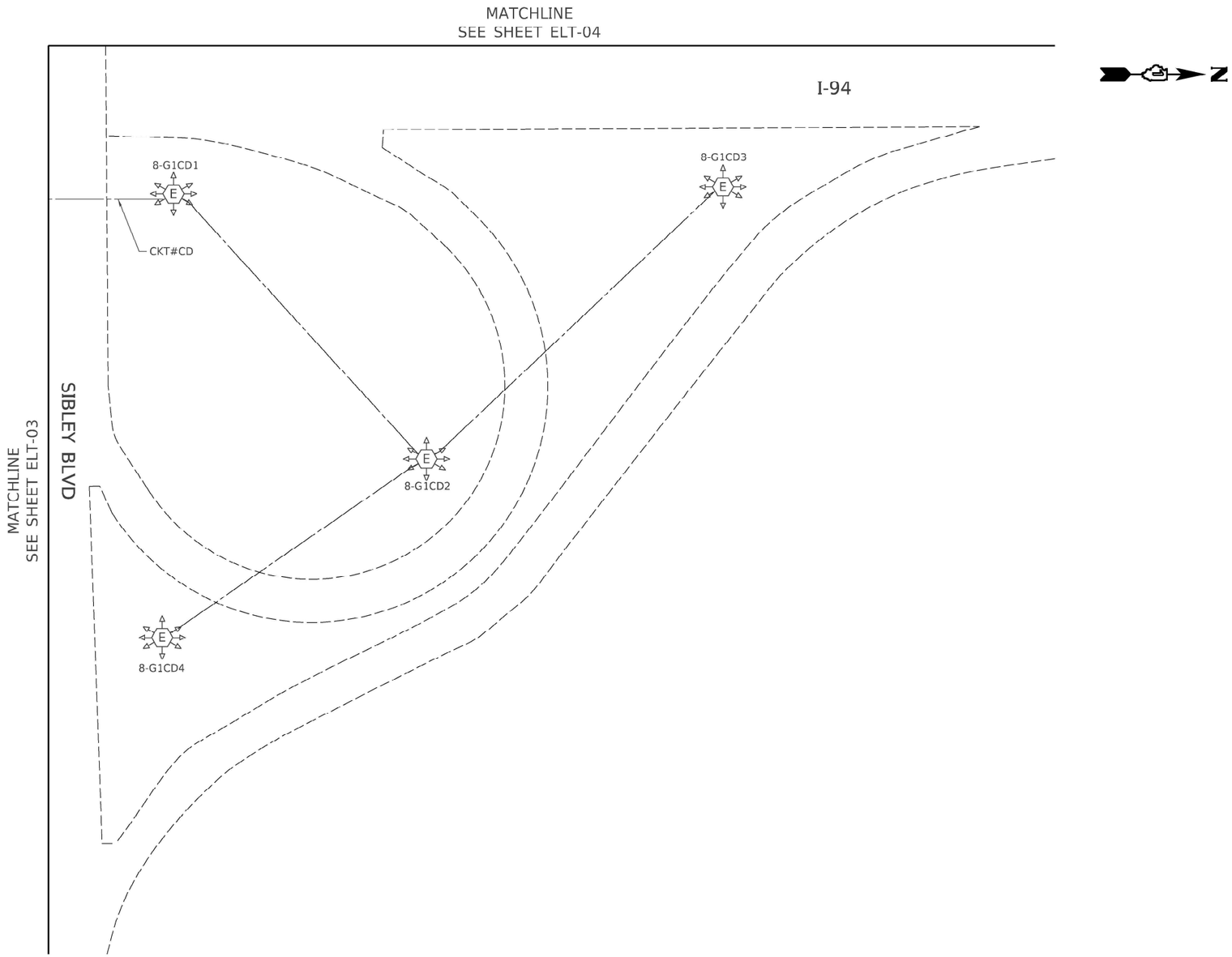

DESCRIPTION	UNIT	QTY
LUMINAIRE, LED, HIGHMAST, OUTPUT DESIGNATION J	EACH	32
REMOVAL OF HIGH MAST LUMINAIRES, SALVAGE	EACH	32
HIGH MAST LUMINAIRE COUNTERWEIGHT	EACH	16

NOTES:

1. REFER TO REMOVAL NOTES ON SHEET ELT-01.

2. CONTRACTOR TO REPLACE EXISTING HIGHMAST HPS LUMINAIRES TO LED LUMINAIRES, LUMINAIRE, LED, HIGHMAST, OUTPUT DESIGNATION J (TYP.), 4000 KELVIN. EXISTING HPS LUMINAIRE SALVAGE TO IDOT. CONTRACTOR TO MATCHLED LUMINAIRE ORIENTATIONS WITH THE EXISTING HPS LUMINAIRE ORIENTATIONS. CONTRACTOR TO REMOVE THE EXISTING COUNTERWEIGHTS, NO SALVAGE. CONTRACTOR TO INSTALL NEW COUNTERWEIGHTS TO MATCH THE WEIGHT OF THE LED LUMANAIRE.

MODEL: $MODELNAME$
FILE NAME: G:\P220720 IDOT D1 PTB 204-001 Michigan City Rd Bridge\03A Design\01 CADD\02 Sheet\Lighting\D162R62-sht-ELT-05.dgn

ELT-05

DELTA ENGINEERING GROUP, LLC
CONSULTING ENGINEERS, CONSTRUCTION MANAGERS, SURVEYORS
111 W JACKSON BLVD, SUITE 910
CHICAGO, IL 60604
T 312.377.7700, F 312.427 6145

USER NAME = rmamucod	DESIGNED - KK/HM	REVISED -	
	DRAWN - AM/KK	REVISED -	
PLOT SCALE = 0.200 ' / in.	CHECKED - LT	REVISED -	
PLOT DATE = 12/13/2024	DATE - 12/13/2024	REVISED -	

STATE OF ILLINOIS
DEPARTMENT OF TRANSPORTATION

MICHIGAN CITY ROAD OVER I-94
INTERCHANGE LIGHTING PLAN

SCALE: SHEET OF SHEETS STA. TO STA.

F.A.I. RTE.	SECTION	COUNTY	TOTAL SHEETS	SHEET NO.
94	FAI 94 22 STRUCTURE 2	COOK	157	51
		CONTRACT NO. 62R62		
	ILLINOIS	FED. AID PROJECT		

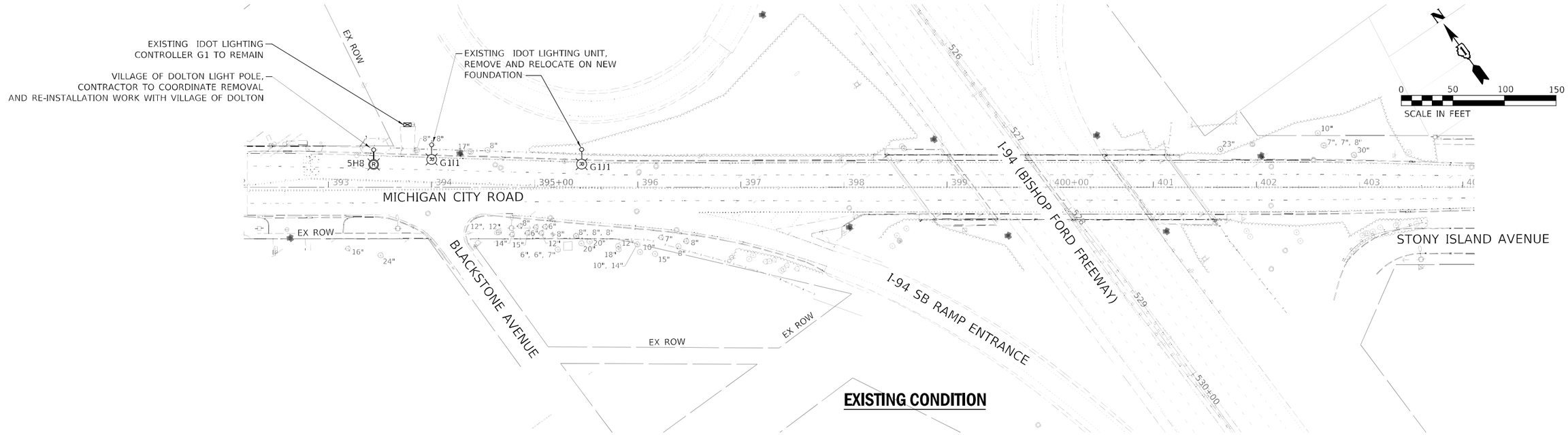

EXISTING CONDITION

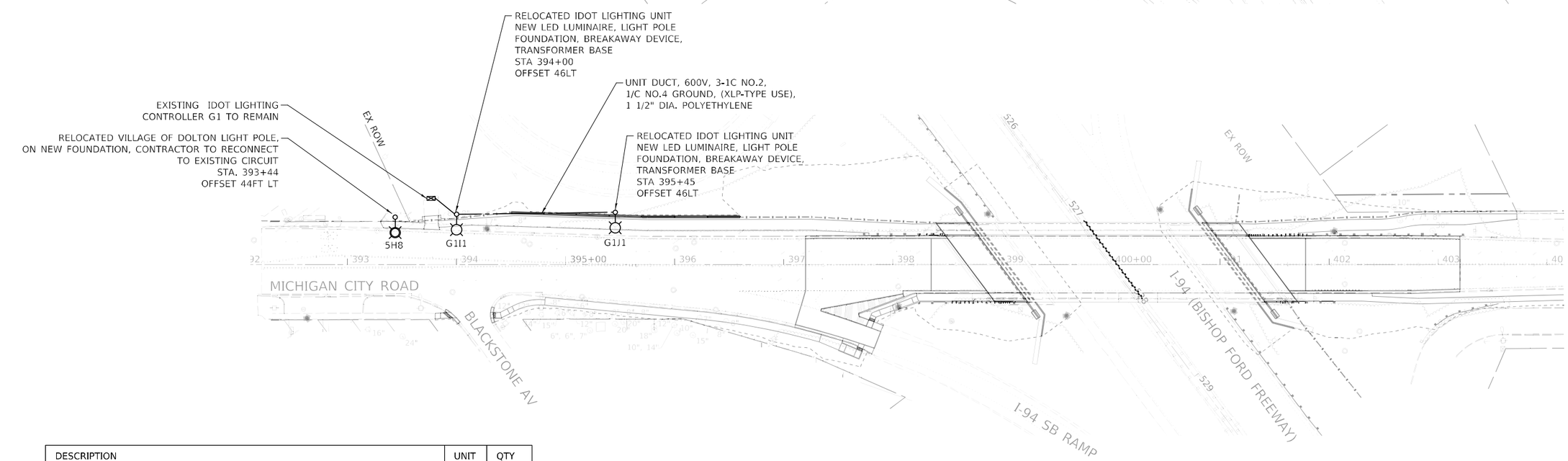

PROPOSED CONDITION

DESCRIPTION	UNIT	QTY
UNIT DUCT, 600V, 3-1C NO.2, 1/C NO.4 GROUND, (XLP-TYPE USE), 1 1/2" DIA. POLYETHYLENE	FOOT	200
LIGHT POLE FOUNDATION, METAL, 15" BOLT CIRCLE, 10" X 8'	EACH	3
BREAKAWAY DEVICE, TRANSFORMER BASE, 15 INCH BOLT CIRCLE	EACH	2
REMOVAL OF POLE FOUNDATION	EACH	3
RELOCATE EXISTING LIGHTING UNIT	EACH	3

MODEL: $MODELNAME$
FILE NAME: G:\P220720 IDOT D1 PTB 204-001 Michigan City Rd Bridge\03A Design\01 CADD\02 Sheet\Lighting\D162R62-sht-ELT-06.dgn

DELTA ENGINEERING GROUP, LLC
CONSULTING ENGINEERS, CONSTRUCTION MANAGERS, SURVEYORS
111 W JACKSON BLVD, SUITE 910
CHICAGO, IL 60604
T 312.377.7700, F 312.427.6145

USER NAME = rmanucod	DESIGNED - KK/HM	REVISED -	
	DRAWN - AM/KK	REVISED -	
PLOT SCALE = 100.0000 ' / in.	CHECKED - LF	REVISED -	
PLOT DATE = 12/13/2024	DATE - 12/13/2024	REVISED -	

STATE OF ILLINOIS
DEPARTMENT OF TRANSPORTATION

MICHIGAN CITY ROAD BRIDGE
LIGHTING RELOCATION PLAN

SCALE: SHEET OF SHEETS STA. TO STA.

ELT-06

F.A.I. RTE.	SECTION	COUNTY	TOTAL SHEETS	SHEET NO.
94	FAI 94 22 STRUCTURE 2	COOK	157	52
		CONTRACT NO. 62R62		
		ILLINOIS FED. AID PROJECT		

DB

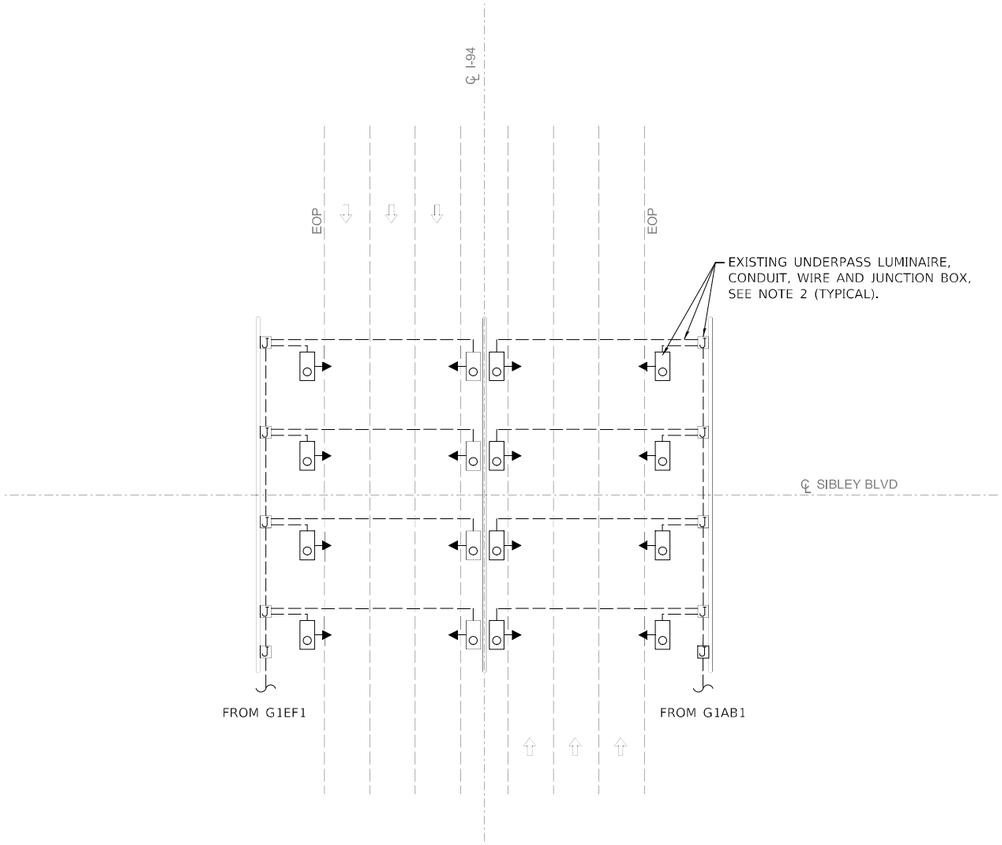

EXISTING UNDERPASS LIGHTING
N.T.S.

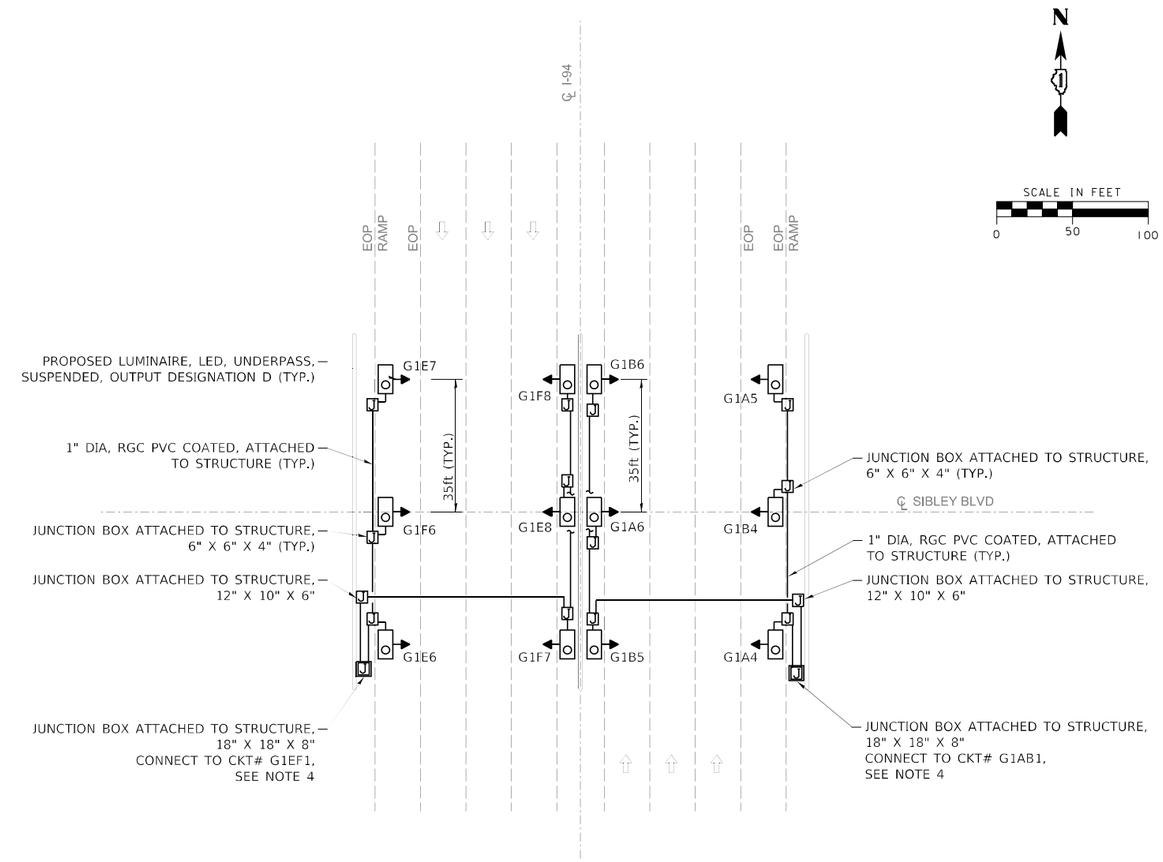

PROPOSED UNDERPASS LIGHTING
N.T.S.

NOTES:

1. REFER TO REMOVAL NOTES ON SHEET ELT-01.
2. CONTRACTOR TO REMOVE EXISTING UNDERPASS LUMINAIRES AND SCRAPPED. REMOVE CONDUIT, JUNCTION BOX AND ELECTRIC CABLES. THIS WORK WILL BE PAID UNDER PAYITEM REMOVAL OF LIGHTING UNIT, NO SALVAGE.
3. SEE IDOT STANDARD SHEET BE-901, FOR PROPOSED UNDERPASS LUMINAIRE INSTALLATION DETAILS.
4. INSTALL NEW FUSE HOLDERS, 30 AMP FUSES AND NEUTRAL SLUG INSIDE JUNCTION BOX. USE EXISTING UNIT DUCT FROM LIGHT TOWER TO JUNCTION BOX.

DESCRIPTION	UNIT	QTY
CONDUIT ATTACHED TO STRUCTURE, 1" DIA., PVC COATED GALVANIZED STEEL	FOOT	500
JUNCTION BOX, STAINLESS STEEL, ATTACHED TO STRUCTURE, 6" X 6" X 4"	EACH	12
JUNCTION BOX, STAINLESS STEEL, ATTACHED TO STRUCTURE, 12" X 10" X 6"	EACH	2
JUNCTION BOX, STAINLESS STEEL, ATTACHED TO STRUCTURE, 18" X 18" X 8"	EACH	2
ELECTRIC CABLE IN CONDUIT, 600V (XLP-TYPE USE) 1/C NO. 10	FOOT	2400
LUMINAIRE, LED, UNDERPASS, SUSPENDED, OUTPUT DESIGNATION D	EACH	12
REMOVAL OF LIGHTING UNIT, NO SALVAGE	EACH	16
CONDUIT ATTACHED TO STRUCTURE, 3" DIA., PVC COATED GALVANIZED STEEL	FOOT	30

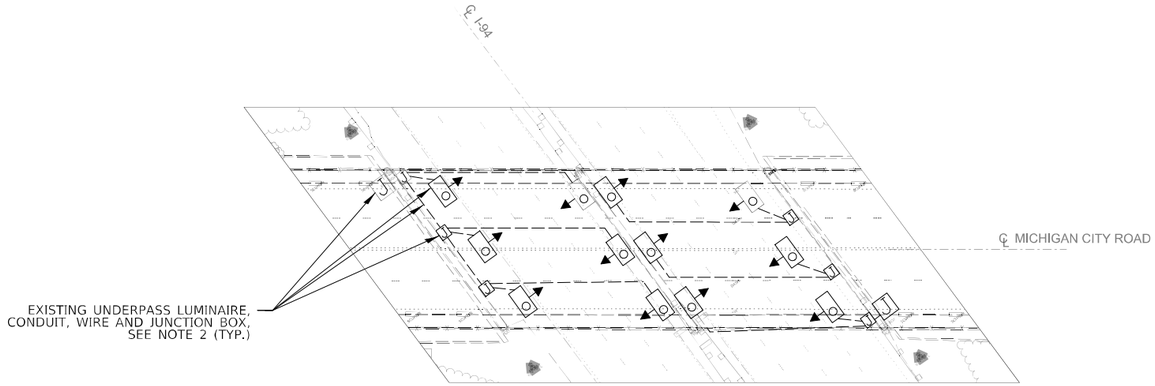

EXISTING UNDERPASS LIGHTING
N.T.S.

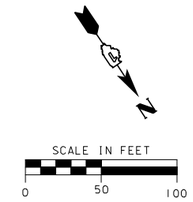

DESCRIPTION	UNIT	QTY
CONDUIT ATTACHED TO STRUCTURE, 1" DIA., PVC COATED GALVANIZED STEEL	FOOT	450
JUNCTION BOX, STAINLESS STEEL, ATTACHED TO STRUCTURE, 6" X 6" X 4"	EACH	12
JUNCTION BOX, STAINLESS STEEL, ATTACHED TO STRUCTURE, 12" X 10" X 6"	EACH	2
JUNCTION BOX, STAINLESS STEEL, ATTACHED TO STRUCTURE, 18" X 18" X 8"	EACH	2
ELECTRIC CABLE IN CONDUIT, 600V (XLP-TYPE USE) 1/C NO. 10	FOOT	2200
LUMINAIRE, LED, UNDERPASS, SUSPENDED, OUTPUT DESIGNATION D	EACH	12
REMOVAL OF LIGHTING UNIT, NO SALVAGE	EACH	12
CONDUIT ATTACHED TO STRUCTURE, 3" DIA., PVC COATED GALVANIZED STEEL	FOOT	30

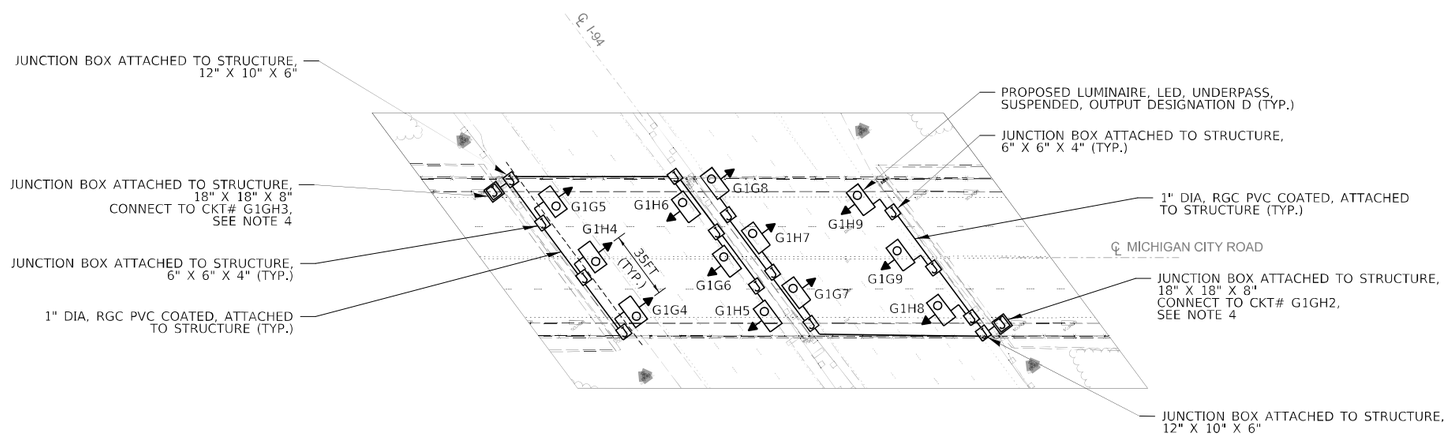

PROPOSED UNDERPASS LIGHTING
N.T.S.

NOTES:

1. REFER TO REMOVAL NOTES ON SHEET ELT-01.
2. CONTRACTOR TO REMOVE EXISTING UNDERPASS LUMINAIRES AND SCRAPPED. REMOVE CONDUIT, JUNCTION BOX AND ELECTRIC CABLES. THIS WORK WILL BE PAID UNDER PAYITEM (84200600) REMOVAL OF LIGHTING UNIT, NO SALVAGE.
3. SEE IDOT STANDARD SHEET BE-901, FOR PROPOSED UNDERPASS LUMINAIRE INSTALLATION DETAILS.
4. INSTALL NEW FUSE HOLDERS, 30 AMP FUSES AND NEUTRAL SLUG INSIDE JUNCTION BOX. CONNECT PROPOSED UNIT DUCT FROM LIGHT TOWER TO PROPOSED JUNCTION BOX.

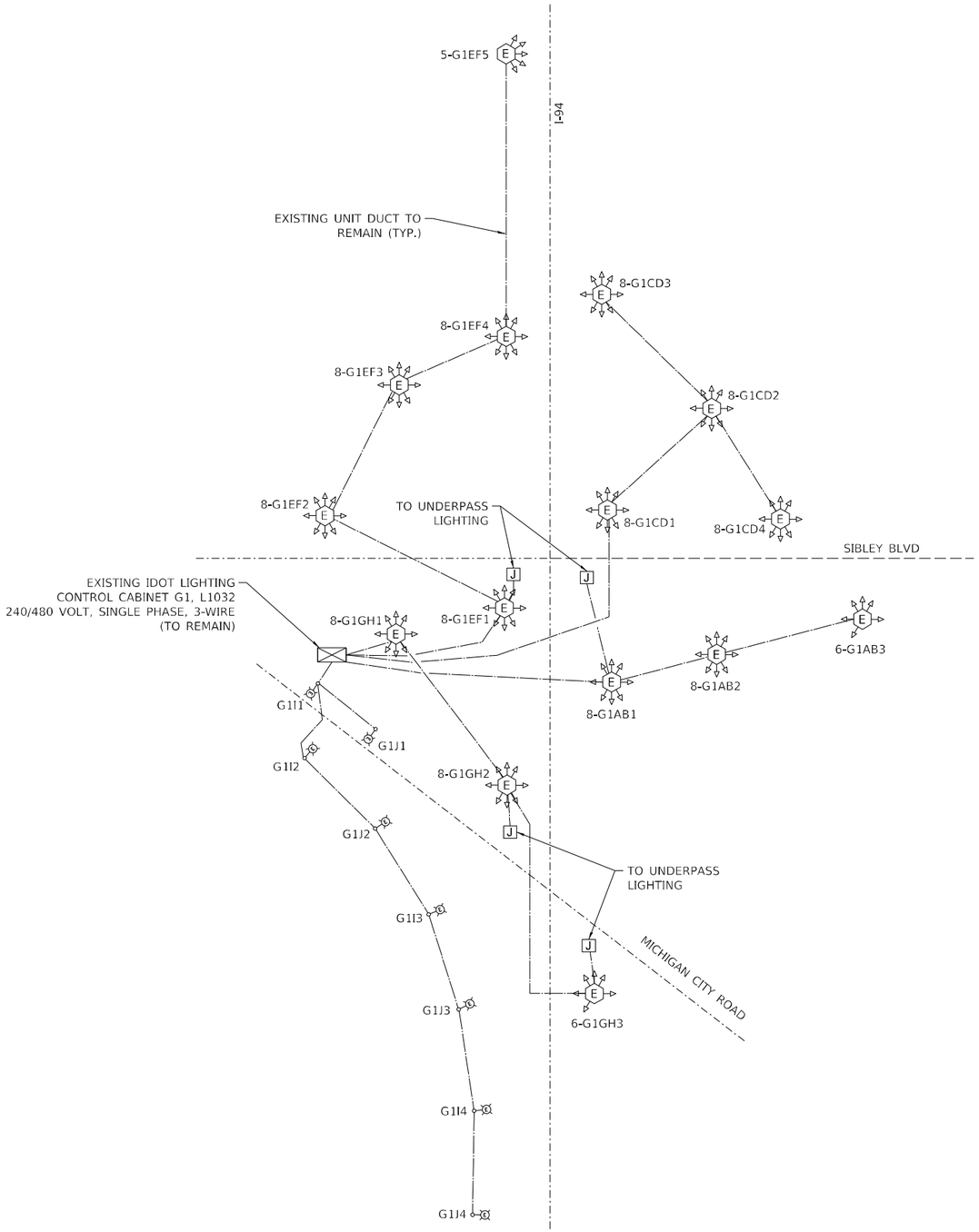

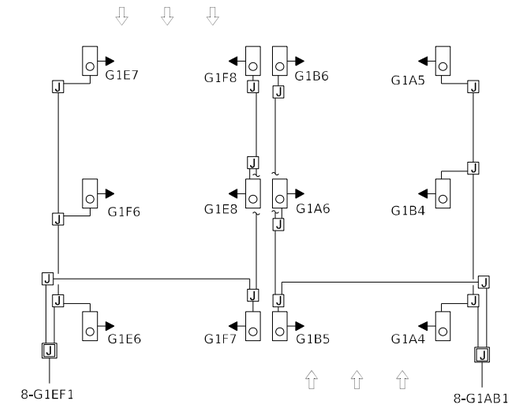

SIBLEY BLVD UNDERPASS LIGHTING

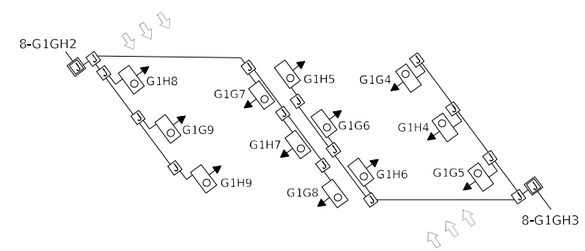

MICHIGAN CITY ROAD UNDERPASS LIGHTING

NOTES:

1. THE PROPOSED LED LUMINAIRE FOR ROADWAY, LOAD HAS BEEN CALCULATED AT 1.00 AMPS/LUMINAIRE.
2. THE PROPOSED LED LUMINAIRE FOR UNDERPASS, LOAD HAS BEEN CALCULATED AT 0.5 AMPS/LUMINAIRE.
3. THE PROPOSED LED LUMINAIRE FOR HIGHMAST, LOAD HAS BEEN CALCULATED AT 1.5 AMPS/LUMINAIRE.

LIGHTING CONTROLLER 'G1' L1032			
CKT#	CONNECTED LOAD AMPS PHASE "A"	CKT#	CONNECTED LOAD AMPS PHASE "B"
A	18	B	18
C	24	D	24
E	28.5	F	30
G	19.5	H	19.5
I	4	J	4
TOTAL	94	**TOTAL**	95.5

MODEL: $MODELNAME$
FILE NAME: $FILE$

ELT-09

DELTA ENGINEERING GROUP, LLC
CONSULTING ENGINEERS, CONSTRUCTION MANAGERS, SURVEYORS
111 W JACKSON BLVD, SUITE 910
CHICAGO, IL 60604
T 312.377.7700, F 312.427.6145

USER NAME = $USER$	DESIGNED - KK/HM	REVISED -	
	DRAWN - AM/KK	REVISED -	
PLOT SCALE = $SCALE$	CHECKED - LF	REVISED -	
PLOT DATE = $DATE$	DATE - 03/05/2025	REVISED -	

STATE OF ILLINOIS
DEPARTMENT OF TRANSPORTATION

MICHIGAN CITY ROAD OVER I-94
SINGLE LINE DIAGRAM CONTROLLER G1

SCALE: | SHEET OF SHEETS | STA. TO STA.

F.A.I. RTE.	SECTION	COUNTY	TOTAL SHEETS	SHEET NO.
94	FAI 94 22 STRUCTURE 2	COOK	157	55
		CONTRACT NO. 62R62		
		ILLINOIS FED. AID PROJECT		

RTE.	SECTION	COUNTY	TOTAL SHEETS	SHEET NO.
94	*	COOK	141	70
STA.		TO STA.		
FED. ROAD DIST. NO. 9	ILLINOIS	FED. AID PROJECT		

* 0606.1 HS-R (06)

SYMBOLS

LIGHT TOWER; 100 FT. MOUNTING HEIGHT, 8-400W HPS, M-C-II LUMINAIRES. UNSHADED INDICATES CONNECTION TO RED PHASE WIRE, SHADED INDICATES CONNECTION TO BLACK PHASE WIRE.

UNDERPASS LUMINAIRE; 55W LPS. UNSHADED INDICATES CONNECTION TO RED PHASE WIRE, SHADED INDICATES CONNECTION TO BLACK PHASE WIRE.

LIGHTING CONTROLLER.

J — JUNCTION BOX; TYPE AND SIZE AS INDICATED.

UNIT DUCT IN TRENCH; SIZE AND CONDUCTORS AS INDICATED.

LIGHTED OVERHEAD SIGN STRUCTURE.

E — EXISTING LIGHTING UNIT TO REMAIN.

RIGHT-OF-WAY LINE.

RIGID STEEL CONDUIT; SIZE AND LENGHT AS INDICATED. TRENCHED OR PUSHED.

1" CONDUIT ATTACHED TO STRUCTURE.

G1AB1 — POLE NUMBER DESIGNATION: G1-CONTROLLER; AB-CIRCUITS A AND B; 1-SEQUENCE OF POLES ON CIRCUIT.

LIGHTING UNIT; WATTAGE, CIRCUIT AND DISTRIBUTION AS INDICATED. UNSHADED INDICATES CONNECTION TO RED PHASE WIRE. SHADED INDICATES CONNECTION TO BLACK PHASE WIRE.

NOTE:

LIGHT TOWERS SHALL BE LOCATED 50 FT. FROM THE EDGE OF PAVEMENT OF THE ROADWAY ON WHICH THEY ARE STATIONED.

16 - 8 pm
128 - 9 pm
28 - underpass lgt

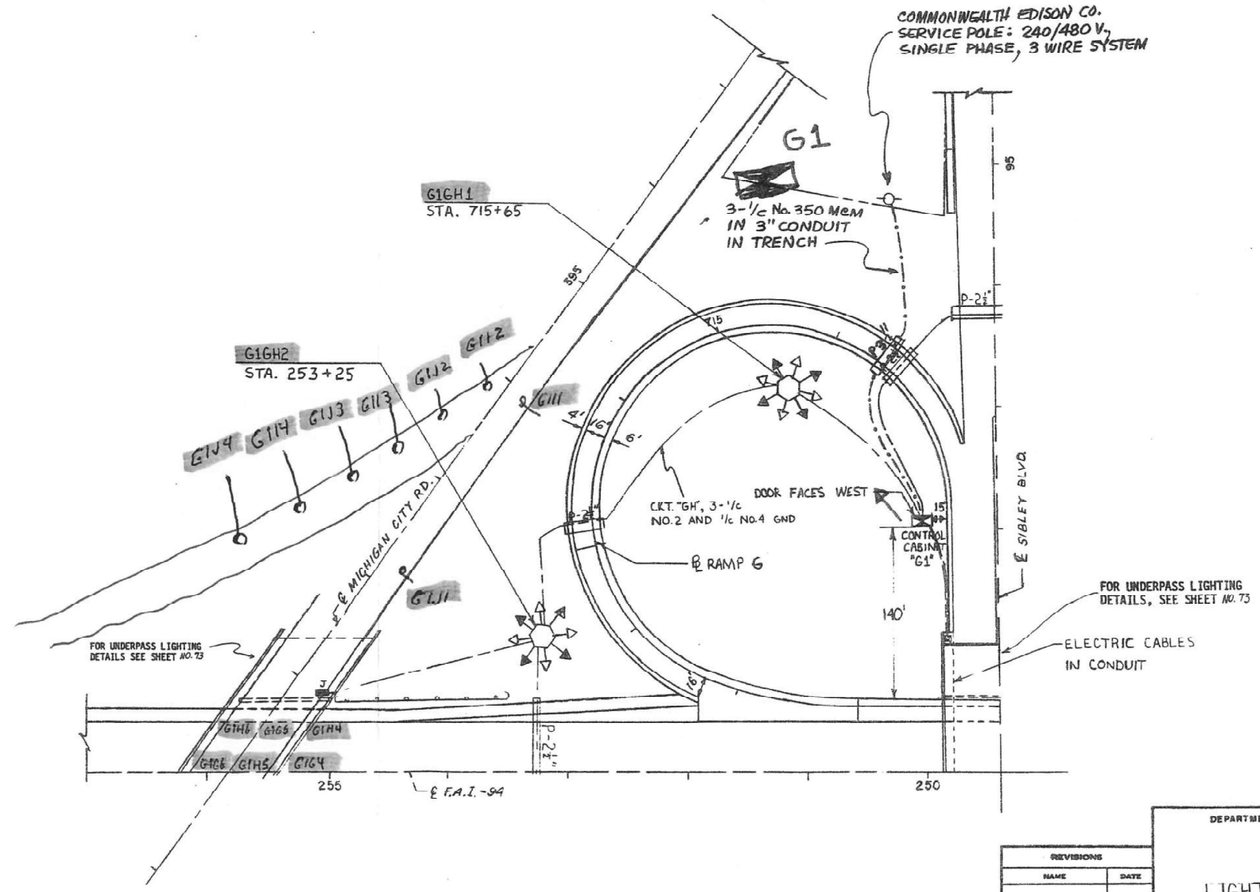

REVISIONS	
NAME	DATE

DEPARTMENT OF TRANSPORTATION

LIGHTING PLAN

DATE AUG 89

CHECKED BY

E1

FOR INFORMATION

ELT-10

MODEL: $MODELNAME$
FILE NAME: G:\LP20720 IDOT D1 PTB 204-001 Michigan City Rd Bridge\03A Design\01 CADD\02 Sheets\Lighting\D162462-sht-ELT-13.dgn

DELTA ENGINEERING GROUP, LLC
CONSULTING ENGINEERS, CONSTRUCTION MANAGERS, SURVEYORS
111 W JACKSON BLVD, SUITE 910
CHICAGO, IL 60604
T 312.377.7700, F 312.427 6145

USER NAME = rmamucod	DESIGNED - KK/HM	REVISED -	
	DRAWN - AM/KK	REVISED -	
PLOT SCALE = 100.0000 ' / in.	CHECKED - LF	REVISED -	
PLOT DATE = 12/13/2024	DATE - 12/13/2024	REVISED -	

STATE OF ILLINOIS
DEPARTMENT OF TRANSPORTATION

MICHIGAN CITY ROAD OVER I-94
EXISTING LIGHTING PLAN

SCALE: | SHEET OF SHEETS | STA. TO STA.

F.A.I. RTE.	SECTION	COUNTY	TOTAL SHEETS	SHEET NO.
94	FAI 94 22 STRUCTURE 2	COOK	157	56
		CONTRACT NO. 62R62		
	ILLINOIS	FED. AID PROJECT		

RTE.	SECTION	COUNTY	TOTAL SHEETS	SHEET NO.
94	*	COOK	141	70A
STA.		TO STA.		
FED. ROAD DIST. NO. 7	ILLINOIS	FED. AID PROJECT-		

0606.1 HB-R (86)

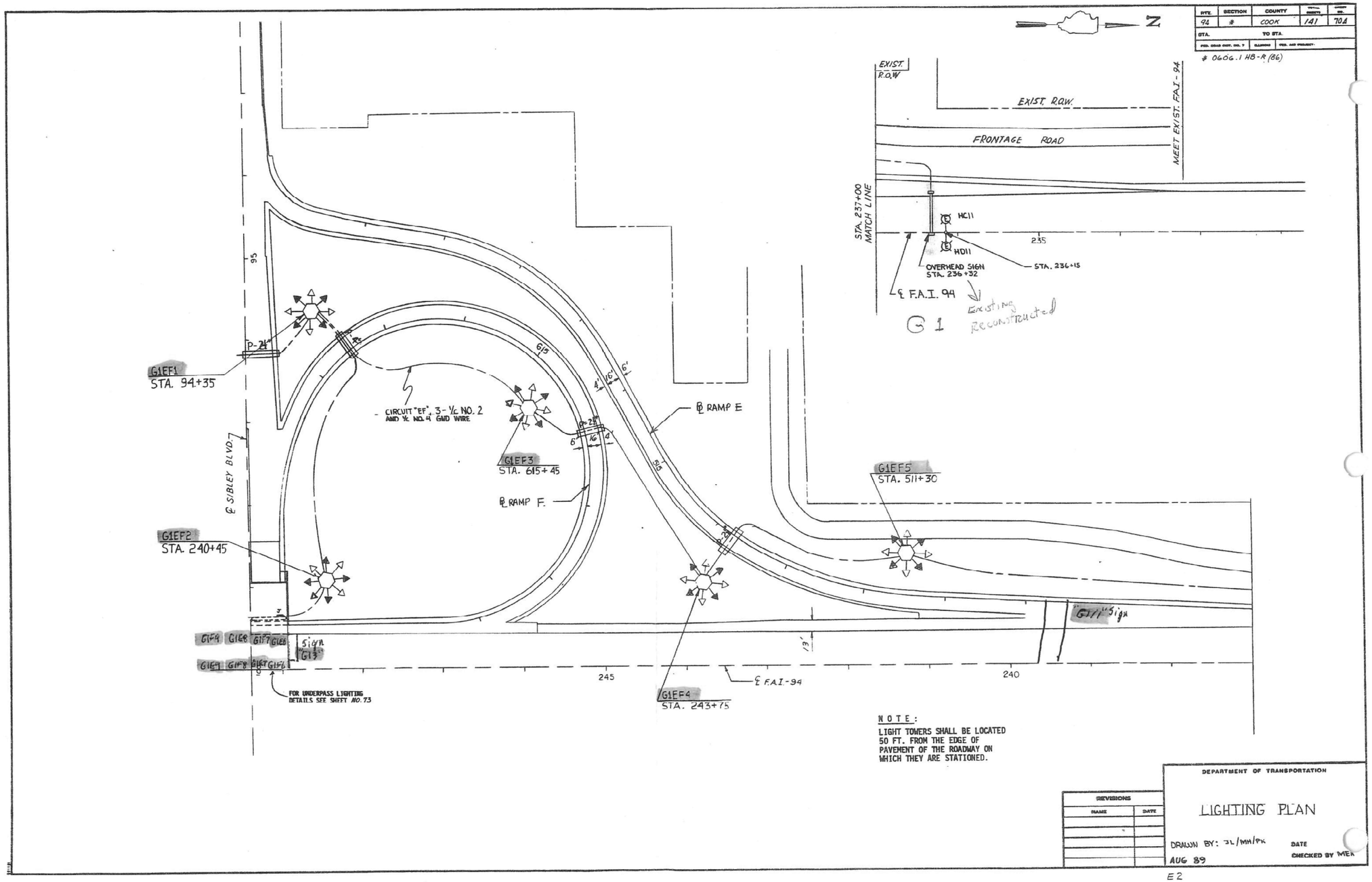

NOTE:
LIGHT TOWERS SHALL BE LOCATED 50 FT. FROM THE EDGE OF PAVEMENT OF THE ROADWAY ON WHICH THEY ARE STATIONED.

REVISIONS	
NAME	DATE

DEPARTMENT OF TRANSPORTATION

LIGHTING PLAN

DRAWN BY: JL/MM/PK DATE AUG 89

CHECKED BY MEK

E2

FOR INFORMATION

ELT-11

MODEL: $MODELNAME$
FILE NAME: G:\LP20720 IDOT D1 PTB 204-001 Michigan City Rd Bridge\03A Design\01 CADD\02 Sheets\Lighting\D162R62-sht-ELT-11.dgn

DELTA ENGINEERING GROUP, LLC
CONSULTING ENGINEERS, CONSTRUCTION MANAGERS, SURVEYORS
111 W JACKSON BLVD, SUITE 910
CHICAGO, IL 60604
T 312.377.7700, F 312.427 6145

USER NAME = rmamucod	DESIGNED - KK/HM	REVISED -	
	DRAWN - AM/KK	REVISED -	
PLOT SCALE = 100.0000 ' / in.	CHECKED - LF	REVISED -	
PLOT DATE = 12/13/2024	DATE - 12/13/2024	REVISED -	

STATE OF ILLINOIS
DEPARTMENT OF TRANSPORTATION

MICHIGAN CITY ROAD OVER I-94
EXISTING LIGHTING PLAN

SCALE: SHEET OF SHEETS STA. TO STA.

F.A.I. RTE.	SECTION	COUNTY	TOTAL SHEETS	SHEET NO.
94	FAI 94 22 STRUCTURE 2	COOK	157	57
		CONTRACT NO. 62R62		
	ILLINOIS	FED. AID PROJECT		

RTE.	SECTION	COUNTY	TOTAL SHEETS	SHEET NO.
94	7	COOK	141	108
STA.		TO STA.		
FED. ROAD DIST. NO. 7	ILLINOIS	FED. AID PROJECT-		

0606.1 HA R(86)

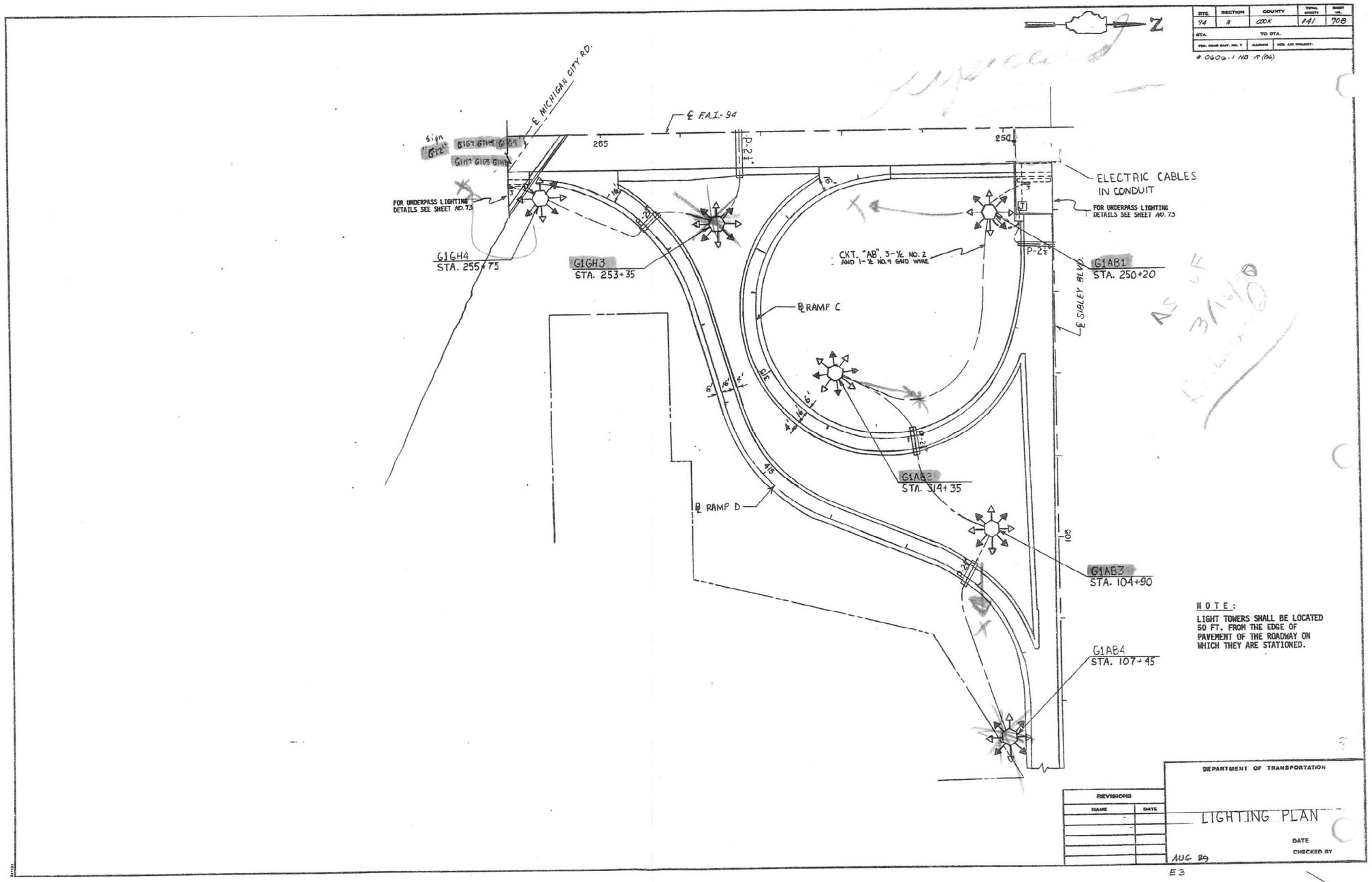

FOR INFORMATION

ELT-12

MODEL: $MODELNAME$
FILE NAME: G:\JP220720 IDOT D1 PTB 204-001 Michigan City Rd Bridge\03A Design\01 CADD\02 Sheet\Lighting\D162R62-sht-ELT-12.dgn

DELTA ENGINEERING GROUP, LLC
CONSULTING ENGINEERS, CONSTRUCTION MANAGERS, SURVEYORS
111 W JACKSON BLVD, SUITE 910
CHICAGO, IL 60604
T 312.377.7700, F 312.427 6145

USER NAME = rmamucod	DESIGNED - KK/HM	REVISED -	
	DRAWN - AM/KK	REVISED -	
PLOT SCALE = 100.0000 ' / in.	CHECKED - LF	REVISED -	
PLOT DATE = 12/13/2024	DATE - 12/13/2024	REVISED -	

STATE OF ILLINOIS
DEPARTMENT OF TRANSPORTATION

MICHIGAN CITY ROAD OVER I-94
EXISTING LIGHTING PLAN

SCALE: | SHEET OF SHEETS | STA. TO STA.

F.A.I. RTE.	SECTION	COUNTY	TOTAL SHEETS	SHEET NO.
94	FAI 94 22 STRUCTURE 2	COOK	157	58
		CONTRACT NO. 62R62		
		ILLINOIS	FED. AID PROJECT	

RTE.	SECTION	COUNTY	TOTAL SHEETS	SHEET NO.
94	#	COOK	141	70 C
STA.		TO STA.		
FED. ROAD DIST. NO. 7	ILLINOIS	FED. AID PROJECT		

06 06 . 1 HA

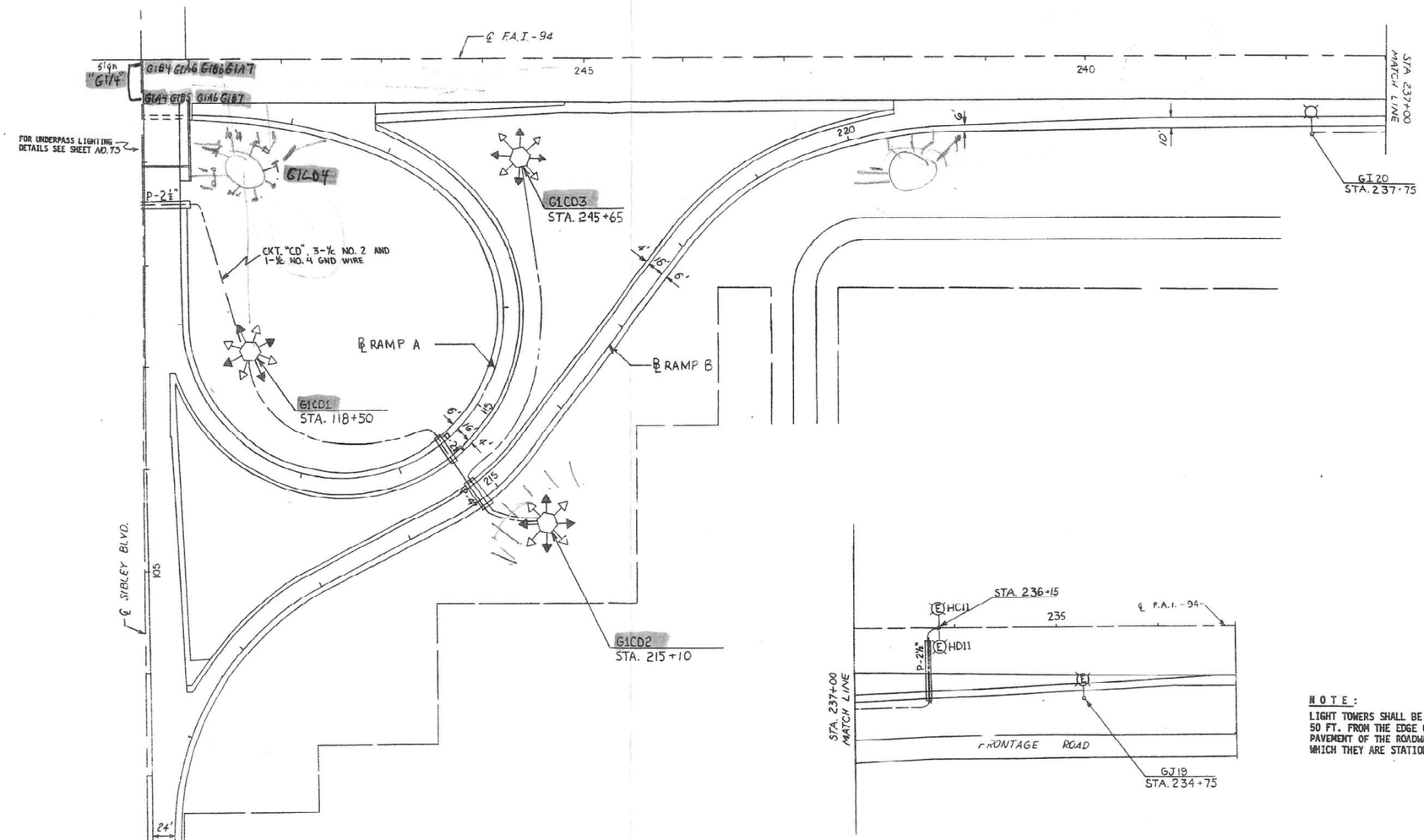

NOTE:
LIGHT TOWERS SHALL BE LOCATED 50 FT. FROM THE EDGE OF PAVEMENT OF THE ROADWAY ON WHICH THEY ARE STATIONED.

REVISIONS	
NAME	DATE

DEPARTMENT OF TRANSPORTATION

LIGHTING PLAN

DATE

CHECKED BY

AUG 89

E4

FOR INFORMATION

ELT-13

MODEL: $MODELNAME$
FILE NAME: G:\LP220720 IDOT D1 PTB 204-001 Michigan City Rd Bridge\03A Design\01 CADD\02 Sheet\Lighting\D162R62-sht-ELT-13.dgn

DELTA ENGINEERING GROUP, LLC
CONSULTING ENGINEERS, CONSTRUCTION MANAGERS, SURVEYORS
111 W JACKSON BLVD, SUITE 910
CHICAGO, IL 60604
T 312.377.7700, F 312.427 6145

USER NAME = rmamucod	DESIGNED - KK/HM	REVISED -	
	DRAWN - AM/KK	REVISED -	
PLOT SCALE = 100.0000 ' / in.	CHECKED - LF	REVISED -	
PLOT DATE = 12/13/2024	DATE - 12/13/2024	REVISED -	

STATE OF ILLINOIS
DEPARTMENT OF TRANSPORTATION

MICHIGAN CITY ROAD OVER I-94
EXISTING LIGHTING PLAN

SCALE: | SHEET OF SHEETS | STA. TO STA.

F.A.I. RTE.	SECTION	COUNTY	TOTAL SHEETS	SHEET NO.
94	FAI 94 22 STRUCTURE 2	COOK	157	59
		CONTRACT NO. 62R62		
	ILLINOIS	FED. AID PROJECT		

RTE.	SECTION	COUNTY	TOTAL SHEETS	SHEET NO.
FAI 94	*	COOK	157	71
STA.		TO STA.		

* 0606.1 HB-R(86)

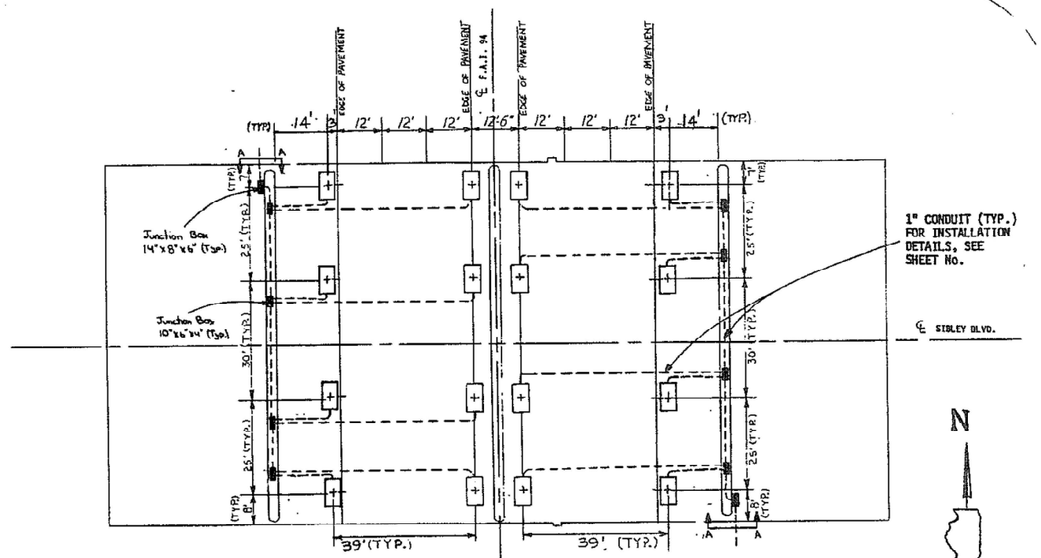

UNDERPASS LIGHTING LAYOUT PLAN

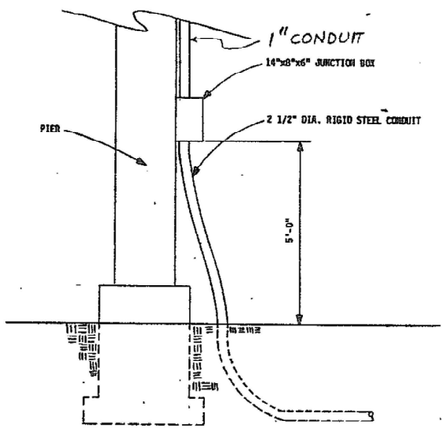

ELEVATION A-A
N.T.S.

REVISIONS	
NAME	DATE

DEPARTMENT OF TRANSPORTATION

SIBLEY BLVD.
UNDERPASS LIGHTING
PLAN

DATE JL
CHECKED BY WEA

AUG 89

E5

FOR INFORMATION

ELT-14

MODEL: $MODELNAME$
FILE NAME: G:\LP220720 IDOT D1 PTB 204-001 Michigan City Rd Bridge\03A Design\01 CADD\02 Sheet\Lighting\D162R62-sht-ELT-11.dgn

DELTA ENGINEERING GROUP, LLC
CONSULTING ENGINEERS, CONSTRUCTION MANAGERS, SURVEYORS
111 W JACKSON BLVD, SUITE 910
CHICAGO, IL 60604
T 312.377.7700, F 312.427 6145

USER NAME = rmamucod	DESIGNED - KK/HM	REVISED -	
	DRAWN - AM/KK	REVISED -	
PLOT SCALE = 100.0000 ' / in.	CHECKED - LF	REVISED -	
PLOT DATE = 12/13/2024	DATE - 12/13/2024	REVISED -	

STATE OF ILLINOIS
DEPARTMENT OF TRANSPORTATION

MICHIGAN CITY ROAD OVER I-94
EXISTING LIGHTING PLAN

SCALE: SHEET OF SHEETS STA. TO STA.

F.A.I. RTE.	SECTION	COUNTY	TOTAL SHEETS	SHEET NO.
94	FAI 94 22 STRUCTURE 2	COOK	157	60
		CONTRACT NO. 62R62		
		ILLINOIS FED. AID PROJECT		

RTE.	SECTION	COUNTY	TOTAL SHEETS	SHEET NO.
94	8	COOK	141	72
STA.		TO STA.		
FED. ROAD DIST. NO. 7	ILLINOIS	FED. AID PROJECT-		

06OC.1 HB-R(06)

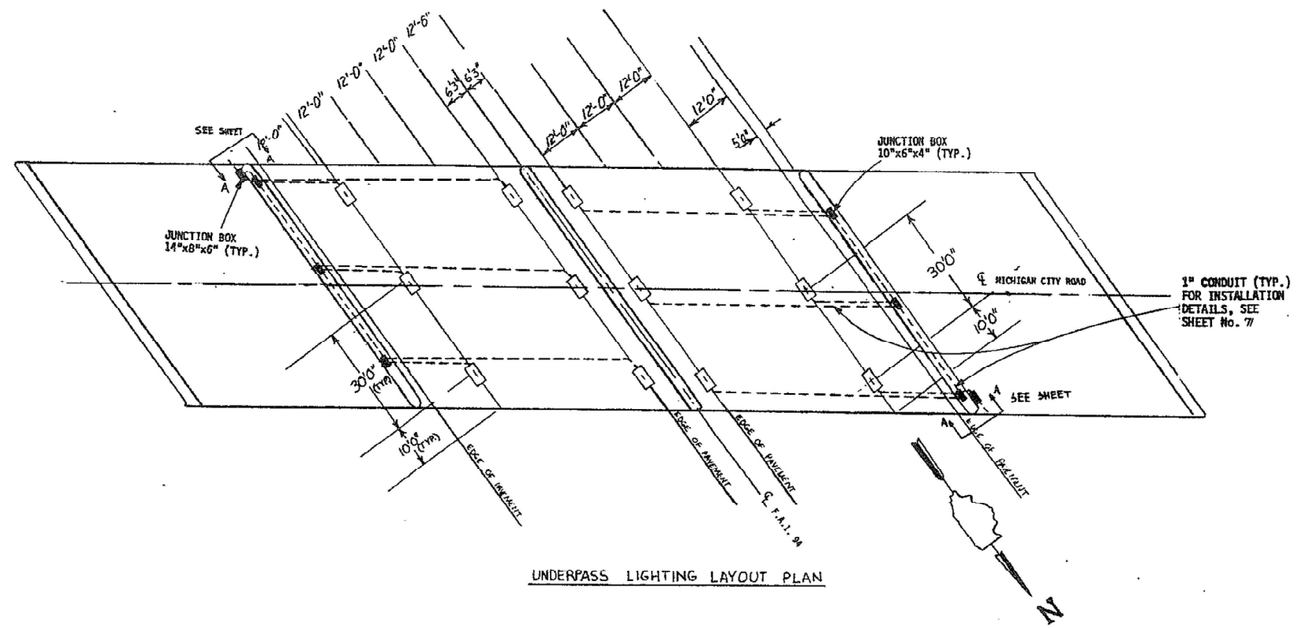

UNDERPASS LIGHTING LAYOUT PLAN

REVISIONS	
NAME	DATE

DEPARTMENT OF TRANSPORTATION

MICHIGAN CITY ROAD

UNDERPASS LIGHTING PLAN

DATE JL/PK

CHECKED BY MEA

AUG 89

EG

FOR INFORMATION

ELT-15

MODEL: $MODELNAME$
FILE NAME: G:\LP220720 IDOT D1 PTB 204-001 Michigan City Rd Bridge\03A Design\01 CADD\02 Sheet\Lighting\D162R62-sht-ELT-15.dgn

DELTA ENGINEERING GROUP, LLC
CONSULTING ENGINEERS, CONSTRUCTION MANAGERS, SURVEYORS
111 W JACKSON BLVD, SUITE 910
CHICAGO, IL 60604
T 312.377.7700, F 312.427 6145

USER NAME = rmamucod	DESIGNED - KK/HM	REVISED -	
	DRAWN - AM/KK	REVISED -	
PLOT SCALE = 100.0000 ' / in.	CHECKED - LF	REVISED -	
PLOT DATE = 12/13/2024	DATE - 12/13/2024	REVISED -	

STATE OF ILLINOIS
DEPARTMENT OF TRANSPORTATION

MICHIGAN CITY ROAD OVER I-94
EXISTING LIGHTING PLAN

SCALE: | SHEET OF SHEETS | STA. TO STA.

F.A.I. RTE.	SECTION	COUNTY	TOTAL SHEETS	SHEET NO.
94	FAI 94 22 STRUCTURE 2	COOK	157	61
		CONTRACT NO. 62R62		
		ILLINOIS	FED. AID PROJECT	

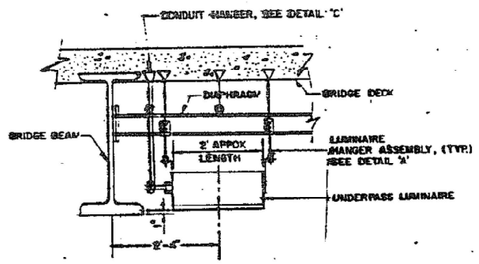

SECTION A-A

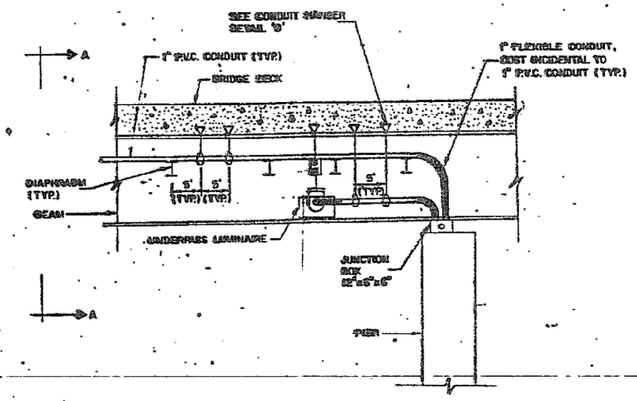

ELEVATION OF UNDERPASS LUMINAIRES INSTALLATION

TYPICAL FOR ALL BRIDGES. SEE PLAN SHEETS FOR PLAN VIEW

NOTES

1. ALL UNDERPASS LUMINAIRES SHALL BE SPACED 30 FT. APART, UNLESS SHOWN DIFFERENT ON THE PLANS, OR AS DIRECTED BY THE ENGINEER.
2. ALL UNDERPASS LUMINAIRES SHALL BE POSITIONED TO HAVE THE LONGITUDINAL CENTERLINE OF THE FIXTURE PARALLEL TO EDGE OF PAVEMENT.

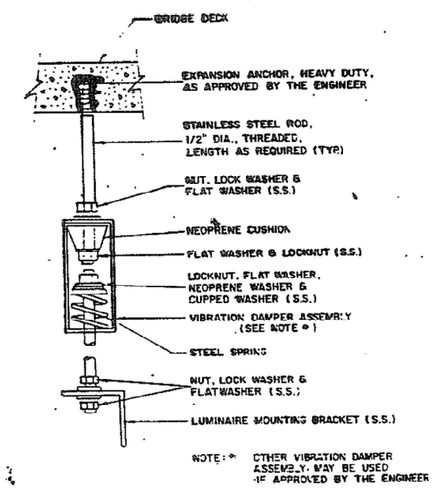

LUMINAIRE HANGER ASSEMBLY, DETAIL 'A'

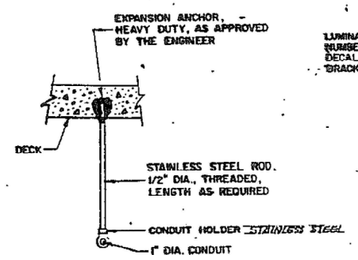

CONDUIT HANGER, DETAIL 'B'

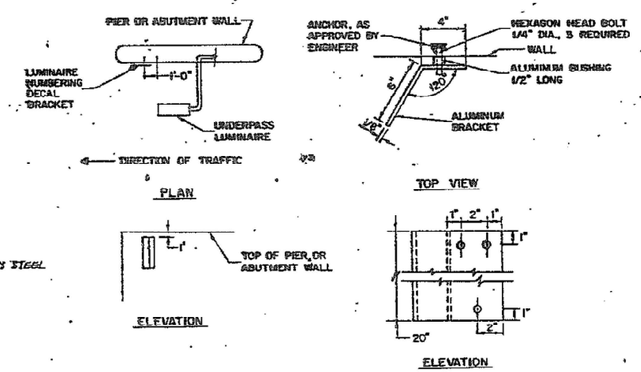

LUMINAIRE NUMBERING DECAL BRACKET

REVISIONS	
NAME	DATE

ILLINOIS DEPARTMENT OF TRANSPORTATION

UNDERPASS LIGHTING DETAILS

SCALE VERT. HORIZ. DRAWN BY

DATE AUG 89 CHECKED BY

UNDERPASS LIGHTING DETAILS E8

FOR INFORMATION

MODEL: $MODELNAME$
FILE NAME: G:\LP220720 IDOT D1 PTB 204-001 Michigan City Rd Bridge\03A Design\01 CADD\02 Sheets\Lighting\D162862-sht-ELT-15.dgn

ELT-16

DELTA ENGINEERING GROUP, LLC
CONSULTING ENGINEERS, CONSTRUCTION MANAGERS, SURVEYORS
111 W JACKSON BLVD, SUITE 910
CHICAGO, IL 60604
T 312.377.7700, F 312.427 6145

USER NAME = rmamucod	DESIGNED - KK/HM	REVISED -	
	DRAWN - AM/KK	REVISED -	
PLOT SCALE = 100.0000 ' / in.	CHECKED - LF	REVISED -	
PLOT DATE = 12/13/2024	DATE - 12/13/2024	REVISED -	

STATE OF ILLINOIS
DEPARTMENT OF TRANSPORTATION

MICHIGAN CITY ROAD OVER I-94
EXISTING LIGHTING PLAN

SCALE: SHEET OF SHEETS STA. TO STA.

F.A.I. RTE.	SECTION	COUNTY	TOTAL SHEETS	SHEET NO.
94	FAI 94 22 STRUCTURE 2	COOK	157	62

CONTRACT NO. 62R62

ILLINOIS | FED. AID PROJECT

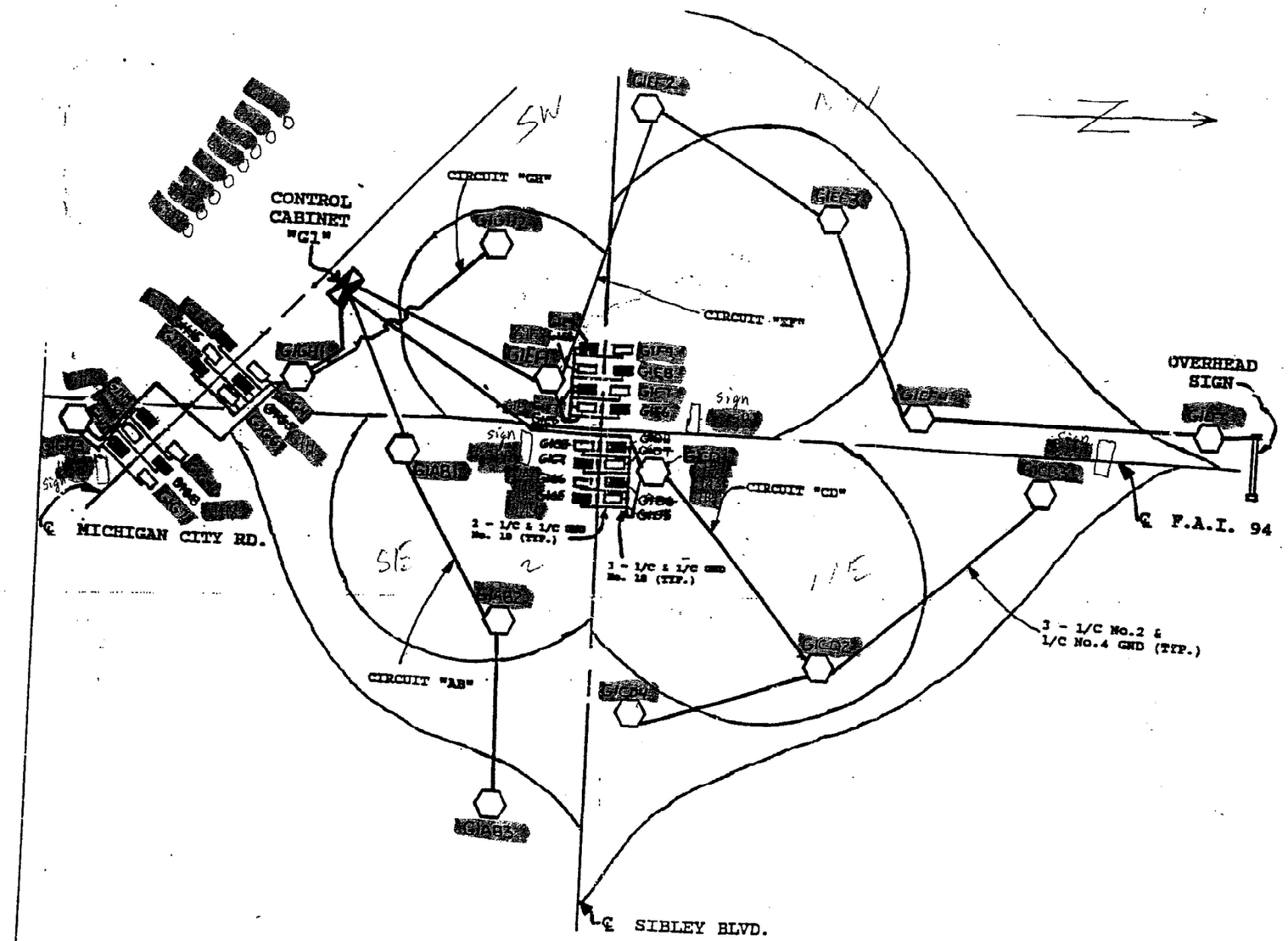

SYMBOLS

High Mast Tower with 8 400W HPS luminaires, 4 on black mast & 4 on red mast.

20W LED Underpass Luminaire; standard on black mast, weatherhead on red mast.

DEPARTMENT OF TRANSPORTATION

WIRING DIAGRAM

CONTROL CABINET "G1"

DATE AUG 89

CHECKED BY

REVISIONS

L. HEUGET	12/13/24

FOR INFORMATION

ELT-17

MODEL: $MODELNAME$
FILE NAME: G:\LP20720 IDOT D1 PTB 204-001 Michigan City Rd Bridge\03A Design\01 CADD\02 Sheets\Lighting\D162R62-sht-ELT-17.dgn

DELTA ENGINEERING GROUP, LLC
CONSULTING ENGINEERS, CONSTRUCTION MANAGERS, SURVEYORS
111 W JACKSON BLVD, SUITE 910
CHICAGO, IL 60604
T 312.377.7700, F 312.427 6145

USER NAME = rmamucod	DESIGNED - KK/HM	REVISED -	
	DRAWN - AM/KK	REVISED -	
PLOT SCALE = 100.0000 ' / in.	CHECKED - LF	REVISED -	
PLOT DATE = 12/13/2024	DATE - 12/13/2024	REVISED -	

STATE OF ILLINOIS
DEPARTMENT OF TRANSPORTATION

MICHIGAN CITY ROAD OVER I-94
EXISTING LIGHTING PLAN

SCALE: | SHEET OF SHEETS | STA. TO STA.

F.A.I. RTE.	SECTION	COUNTY	TOTAL SHEETS	SHEET NO.
94	FAI 94 22 STRUCTURE 2	COOK	157	63

CONTRACT NO. 62R62

ILLINOIS | FED. AID PROJECT

RTE.	SECTION	COUNTY	TOTAL SHEETS	SHEET NO.
94	#	COOK	141	74
STA.		TO STA.		

0606.1 HB-R (BC)

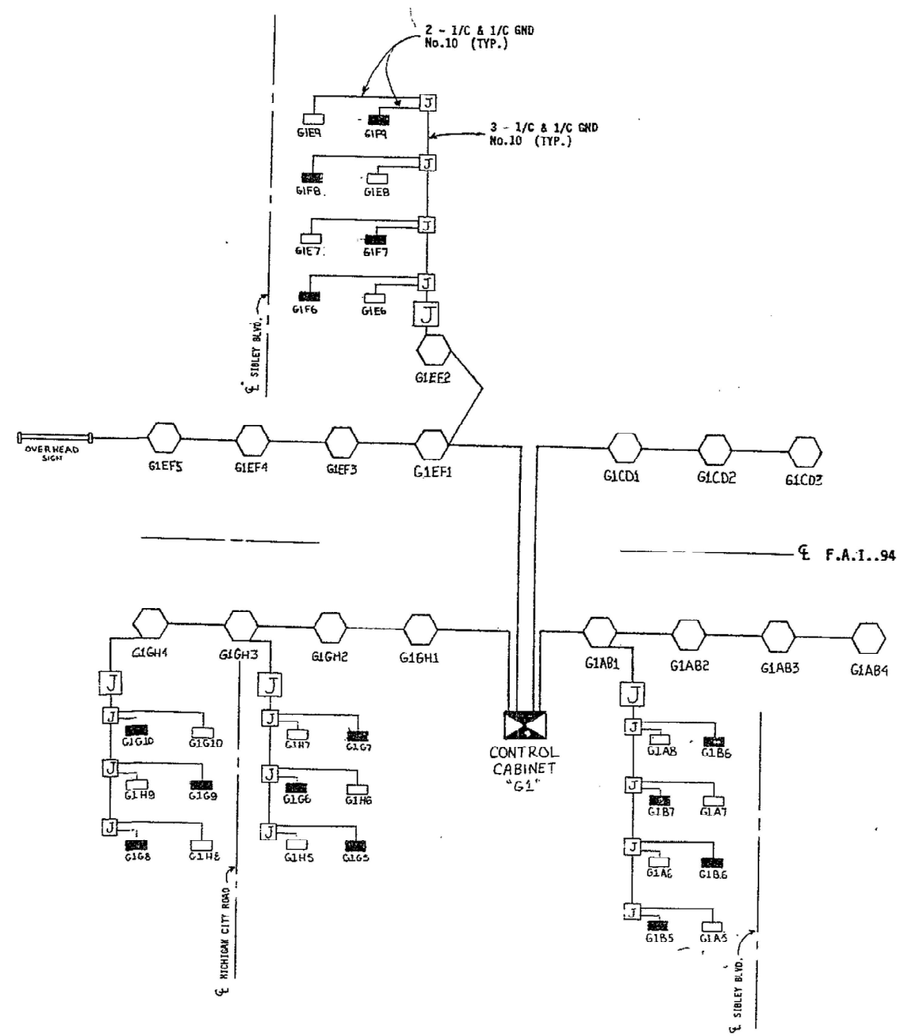

SYMBOLS

High Mast Tower with 8 400W HPS luminaires, 4 on black wire & 4 on red wire.

3 - 1/c No.2 & 1/c No.4 gnd Electrical Cables.

3 - 1/c & 1/c gnd No.10 Electrical Cables

55W LPS Underpass Luminaire; shaded on black wire, unshaded on red wire.

14" X 8" X 6" Junction Box, attached to structure.

10" X 6" X 4" Junction Box, attached to structure.

REVISIONS	
NAME	DATE

DEPARTMENT OF TRANSPORTATION

WIRING DIAGRAM

CONTROL CABINET "G1"

DATE AUG 89

CHECKED BY

E7

FOR INFORMATION

ELT-18

MODEL: $MODELNAME$
FILE NAME: G:\LP220720 IDOT D1 PTB 204-001 Michigan City Rd Bridge\03A Design\01 CADD\02 Sheets\Lighting\D162862-sht-ELT-18.dgn

DELTA ENGINEERING GROUP, LLC
CONSULTING ENGINEERS, CONSTRUCTION MANAGERS, SURVEYORS
111 W JACKSON BLVD, SUITE 910
CHICAGO, IL 60604
T 312.377.7700, F 312.427 6145

USER NAME = rmamucod	DESIGNED - KK/HM	REVISED -	
	DRAWN - AM/KK	REVISED -	
PLOT SCALE = 100.0000 ' / in.	CHECKED - LF	REVISED -	
PLOT DATE = 12/13/2024	DATE - 12/13/2024	REVISED -	

STATE OF ILLINOIS
DEPARTMENT OF TRANSPORTATION

MICHIGAN CITY ROAD OVER I-94
EXISTING LIGHTING PLAN

SCALE: | SHEET OF SHEETS | STA. TO STA.

F.A.I. RTE.	SECTION	COUNTY	TOTAL SHEETS	SHEET NO.
94	FAI 94 22 STRUCTURE 2	COOK	157	64
		CONTRACT NO. 62R62		
		ILLINOIS	FED. AID PROJECT	

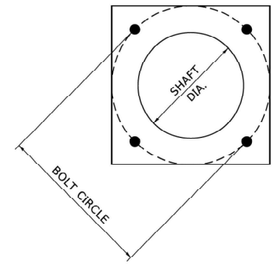

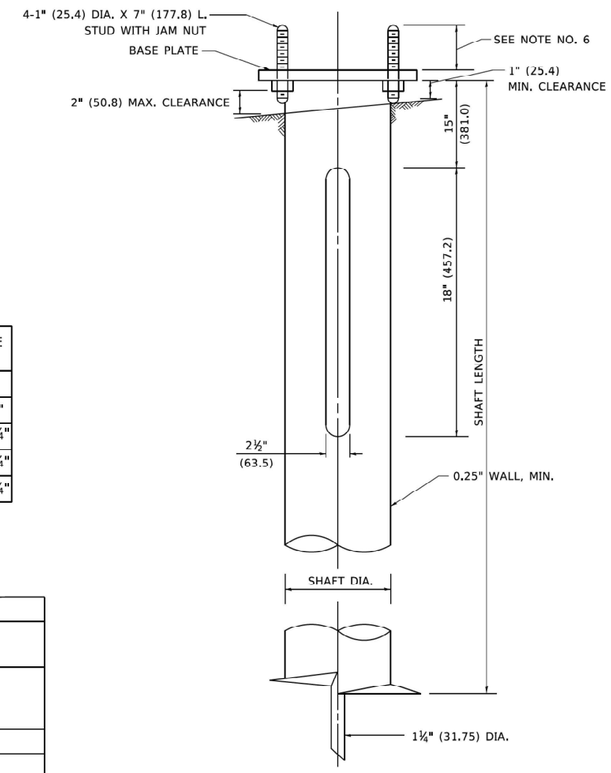

NOTES

1. ALL DIMENSION IN INCHES (MILLIMETERS) UNLESS OTHERWISE SHOWN.
2. ALL MATERIAL SHALL BE GALVINIZED ACCORDING TO AASHTO M111, UNLESS OTHERWISE SPECIFIED.
3. ALL WELDS SHALL BE CONTINUOUS AND NOT LESS THAN 1#4" (6.35 mm) FILLET WELDS. THE WELDED FOUNDATION SHALL BE CAPABLE OF WITHSTANDING 10,000 FT/LBS (13558.18 n.m) OF INSTALLATION TORQUE APPLIED ABOUT THE AXIS OF THE FOUNDATION.
4. THE HELIX FOUNDATION SHAFT SHALL BE INSTALLED VERTICAL AND THE BASE PLATE SHALL BE IN LEVEL. THE BREAKAWAY COUPLINGS AND HARDWARE SHALL NOT BE USED TO ALIGN THE POLE INSTALLATION.
5. THE CABLE TRENCH SHALL BE BACKFILLED AND FIRMLY COMPACTED BEFORE THE INSTALLATION OF THE LIGHT POLE.
6. THE CONTRACTOR SHALL COORDINATE EXTENSION OF ANCHOR BOLTS ABOVE TOP OF THE BASE PLATE WITH THE BREAKAWAY DEVICE MANUFACTURER'S REQUIREMENTS.
7. ANY VOIDS WITHIN THE METAL FOUNDATION SHALL BE FILLED WITH FINE AGGREGATE.
8. METAL FOUNDATIONS SHALL BE INSTALLED IN UNDISTURBED SOIL. PREDRILLING A PILOT HOLE AND/OR BACKFILLING AROUND THE FOUNDTION IS NOT ALLOWED.
9. THE METAL FOUNDATION SHALL NOT BE INSTALLED TO A TORQUE WHICH EXCEEDS THE MANUFACTURER'S MAXIMUM TORQUE RATING NOR SHALL IT BE INSTALLED TO AN INSTALLATION TORQUE VALUE OF LESS THAN 3,500 FT LB (4,750 KNM). METAL FOUNDATIONS THAT ARE NOT INSTALLED TO FULL INSTALLATION DEPTH OR DO NOT ACHIEVE THE MINIMUM INSTALLATION TORQUE SHALL BE REMOVED AND REPLACED WITH A CONCRETE FOUNDATION AT NO ADDITIONAL COST.
10. THE BASEPLATE SHALL BE PERPENDICULAR TO THE SHAFT AXIS (± 1°) AND THE HOLE CENTERLINE SHALL BE CONCENTRIC (± 0.188) TO THE SHAFT AXIS.
11. THE PILOT POINT AND SHAFT AXIS SHALL BE CONCENTRIC (± 0.125) AND IN LINE (± 2°).
12. THE BASEPLATE SHALL BE STAMPED WITH THE MANUFACTURERS NAME AND DATE OF MANUFACTURE.

HELIX FOUNDATION SIZE

POLE MOUNTING HEIGHT	BOLT CIRCLE	SHAFT DIAMETER	SHAFT LENGTH	BASEPLATE
30 FT.	11½"	8⅝"	6 FT.	12"x12"x1"
31 FT.-35 FT.	11½"	8⅝"	6 FT.	12"x12"x1"
36 FT.-40FT.	15"	8⅝"	6 FT.	15"x15"x1¼"
41 FT.-45 FT.	15"	8⅝"	6 FT.	15"x15"x1¼"
46 FT.-50 FT.	15"	10"	8 FT.	15"x15"x1¼"

METAL HELIX FOUNDATION MATERIALS

ITEM	MATERIAL REQUIREMENT
BASEPLATE	AASHTO M 270M, GRADE 36 (M270M, GRADE 250)
SHAFT	ASTM A 252, GRADE 2 (PHOSPHOROUS 0.04% MAXIMUM, SULFUR 0.05% MAXIMUM)
HELIX SCREW	AASHTO M 183 (ASTM A 635)
PILOT POINT	AASHTO M 270 (ASTM A 575)
ANCHOR RODS/STUDS	AASHTO M 314 (ASTM F 1554)
HEXAGON NUTS	AASHTO M 291M (ASTM A 563) GRADE DH, OR AASHTO M 292 (ASTM A 194) GRADE 2H
WASHERS	AASHTO M 293 (ASTM F 436)

MODEL: Default
FILE NAME: pw:\\planroom.dot.illinois.gov:PWIDOT\Documents\IDOT Offices\District 1\Projects\DistStd22x34\CADData\CADsheets\be305.dgn

USER NAME = footemj	DESIGNED -	REVISED -	STATE OF ILLINOIS DEPARTMENT OF TRANSPORTATION
	DRAWN - DLB	REVISED -	
PLOT SCALE = 50.0000 ' / in.	CHECKED -	REVISED -	
PLOT DATE = 4/19/2019	DATE - 02-27-07	REVISED -	

LIGHT POLE FOUNDATION, METAL

SCALE: NONE | SHEET 1 OF 1 SHEETS | STA. | TO STA.

F.A. RTE.	SECTION	COUNTY	TOTAL SHEETS	SHEET NO.
	BE–305	CONTRACT NO.		

ILLINOIS | FED. AID PROJECT

be305.dgn 4/19/2019 2:21:18 PM User=footemj

MODEL: $MODELNAME$
FILE NAME: G:\LP220720 IDOT D1 PTB 204-001 Michigan City Rd Bridge\03A Design\01 CADD\02 Sheet\Lighting\D162R62-sht-ELT-19.dgn

ELT-19

DELTA ENGINEERING GROUP, LLC
CONSULTING ENGINEERS, CONSTRUCTION MANAGERS, SURVEYORS
111 W JACKSON BLVD, SUITE 910
CHICAGO, IL 60604
T 312.377.7700, F 312.427 6145

USER NAME = rmamucod	DESIGNED - KK/HM	REVISED -
	DRAWN - AM/KK	REVISED -
PLOT SCALE = 100.0000 ' / in.	CHECKED - LF	REVISED -
PLOT DATE = 12/13/2024	DATE - 12/13/2024	REVISED -

STATE OF ILLINOIS
DEPARTMENT OF TRANSPORTATION

STANDARD DETAILS

SCALE: | SHEET OF SHEETS | STA. | TO STA.

F.A.I. RTE.	SECTION	COUNTY	TOTAL SHEETS	SHEET NO.
94	FAI 94 22 STRUCTURE 2	COOK	157	65
		CONTRACT NO. 62R62		

ILLINOIS | FED. AID PROJECT

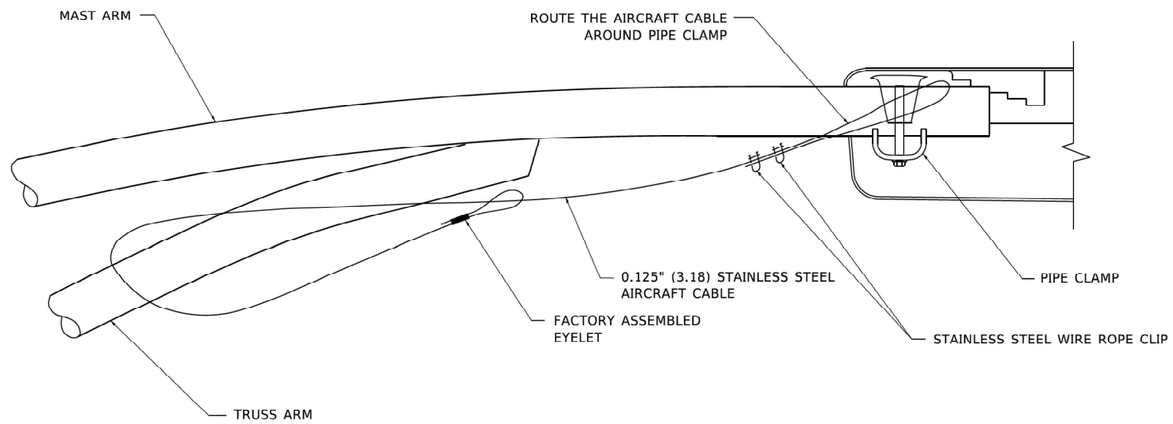

SIDE VIEW (TRUSS ARM)
N.T.S.

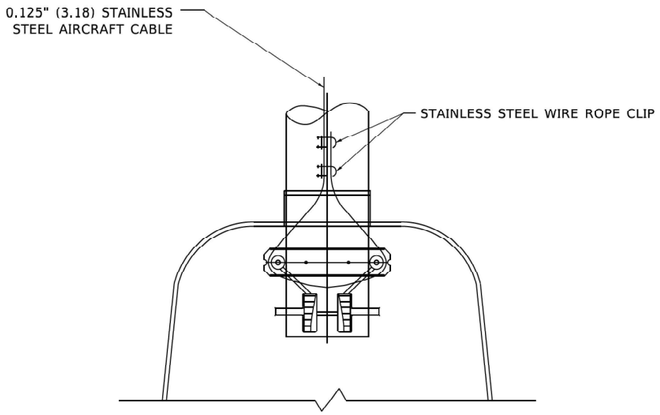

BOTTOM VIEW
N.T.S.

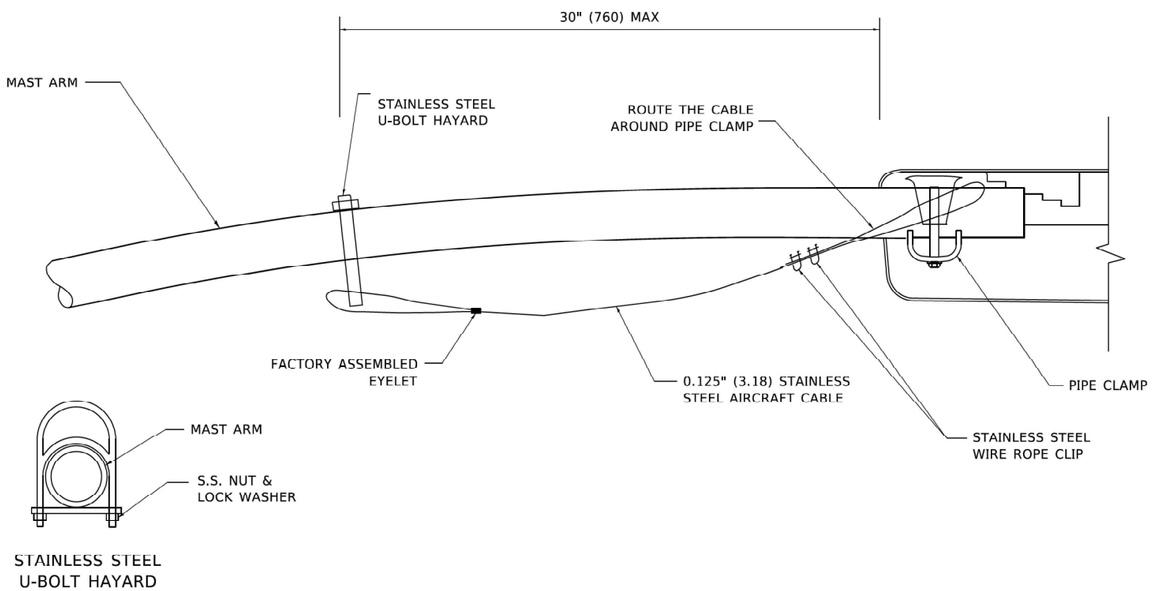

SIDE VIEW (SINGLE MEMBER OR DAVIT ARM)
N.T.S.

NOTES:

1. ALL DIMENSIONS ARE IN MILLIMETERS (INCHES) UNLESS OTHERWISE SHOWN.
2. CONTRACTOR SHALL ADJUST THE WIRE CLIP TO ELIMINATE ANY SLACK FROM THE WIRE ROPE.
3. THE 0.125" (3.18) STAINLESS STEEL AIRCRAFT CABLE SHALL REMAIN VISIBLE FROM THE GROUND LEVEL.
4. THE BREAKING STRENGTH OF THE CABLE SHALL BE 1700 LBS. MIN.

MODEL: Default
FILE NAME: $cs(pkn=pwn;dn=Illinois;pw=PWIDOT)Documents\IDOT Offices\District 1\Projects\Shields22x14\CADData\CADsheets\be701.dgn

USER NAME = footemj	DESIGNED -	REVISED - 08-08-03	STATE OF ILLINOIS DEPARTMENT OF TRANSPORTATION	LUMINAIRE SAFETY CABLE ASSEMBLY	F.A. RTE.	SECTION	COUNTY	TOTAL SHEETS	SHEET NO.
	DRAWN -	REVISED -							
PLOT SCALE = 50.0000 ' / in.	CHECKED -	REVISED -			BE-701		CONTRACT NO.		
PLOT DATE = 4/19/2019	DATE -	REVISED -		SCALE: NONE SHEET 1 OF 1 SHEETS STA. TO STA.		ILLINOIS	FED. AID PROJECT		

MODEL: $MODELNAME$
FILE NAME: G:\LP220720 IDOT D1 PTB 204-001 Michigan City Rd Bridge\03A Design\01 CADD\02 Sheet\Lighting\D162R62-sht-ELT-23.dgn

ELT-20

DELTA ENGINEERING GROUP, LLC
CONSULTING ENGINEERS, CONSTRUCTION MANAGERS, SURVEYORS
111 W JACKSON BLVD, SUITE 910
CHICAGO, IL 60604
T 312.377.7700, F 312.427 6145

USER NAME = rmamucod	DESIGNED - KK/HM	REVISED -	STATE OF ILLINOIS DEPARTMENT OF TRANSPORTATION	STANDARD DETAILS	F.A.I. RTE.	SECTION	COUNTY	TOTAL SHEETS	SHEET NO.
	DRAWN - AM/KK	REVISED -			94	FAI 94 22 STRUCTURE 2	COOK	157	66
PLOT SCALE = 100.0000 ' / in.	CHECKED - LF	REVISED -					CONTRACT NO. 62R62		
PLOT DATE = 12/13/2024	DATE - 12/13/2024	REVISED -		SCALE: SHEET OF SHEETS STA. TO STA.		ILLINOIS	FED. AID PROJECT		

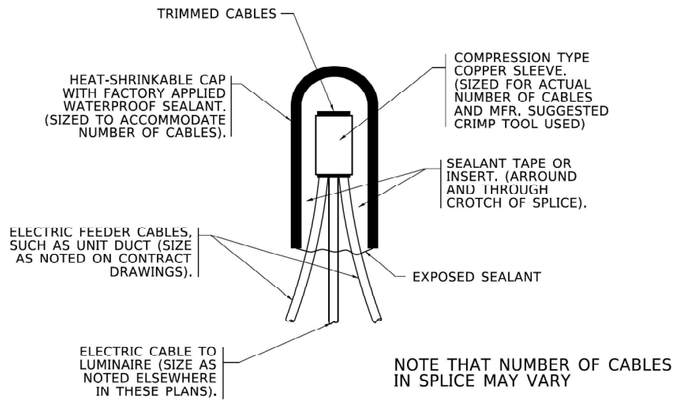

TYPICAL SPLICE DETAIL

N.T.S.

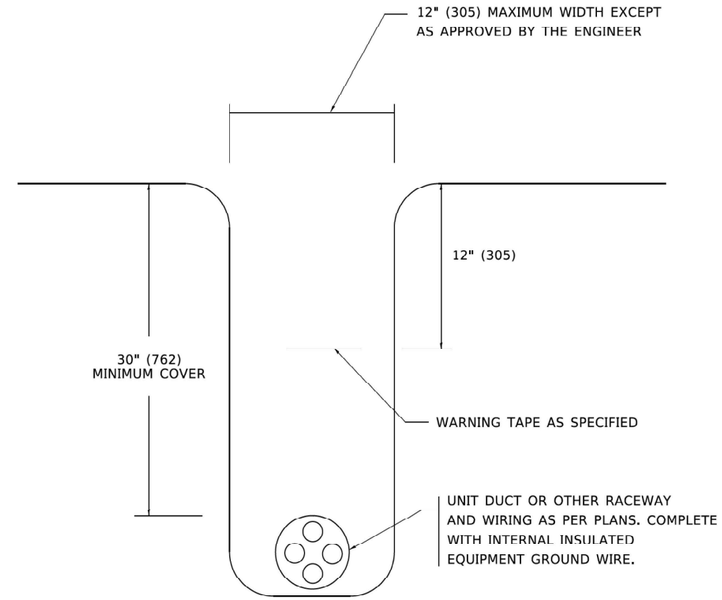

TYPICAL WIRING IN TRENCH DETAIL

N.T.S.

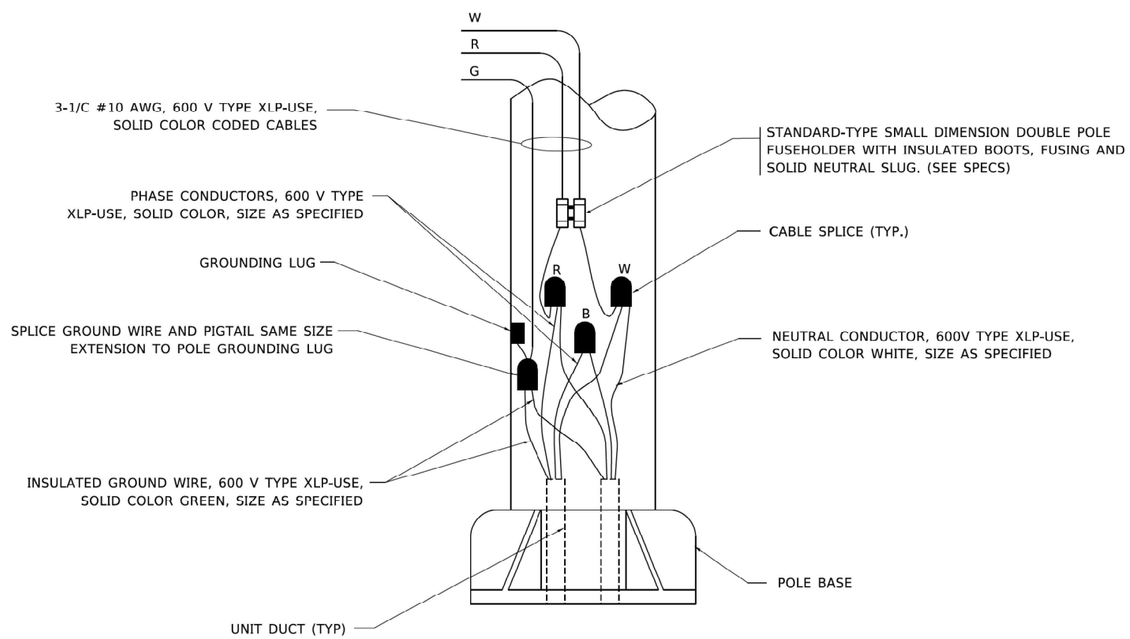

POLE WIRING DETAIL

N.T.S.

MODEL: Default
FILE NAME: pw:\\pdaerp2pw.dot.illinois.gov:PWIDOT\Documents\IDOT Offices\District 1\Projects\Sites\d02x34\CADData\Sheets\be702.dgn

be702.dgn 3/2/2020 7:37:37 AM User=keysa

USER NAME = keysa	DESIGNED -	REVISED - 02/04/2020	STATE OF ILLINOIS DEPARTMENT OF TRANSPORTATION	MISC. ELECTRICAL DETAILS SHEET A	F.A. RTE.	SECTION	COUNTY	TOTAL SHEETS	SHEET NO.
	DRAWN -	REVISED -							
PLOT SCALE = 50.0000 ' / in.	CHECKED -	REVISED -			BE-702		CONTRACT NO.		
PLOT DATE = 3/2/2020	DATE - 08/08/2003	REVISED -		SCALE: NONE / SHEET 1 OF 1 SHEETS / STA. TO STA.			ILLINOIS	FED. AID PROJECT	

ELT-21

MODEL: $MODELNAME$
FILE NAME: G:\LIP220720 IDOT D1 PTB 204-001 Michigan City Rd Bridge\03A Design\01 CADD\02 Sheets\Lighting\D162R62-sht-ELT-21.dgn

DELTA ENGINEERING GROUP, LLC CONSULTING ENGINEERS, CONSTRUCTION MANAGERS, SURVEYORS 111 W JACKSON BLVD, SUITE 910 CHICAGO, IL 60604 T 312.377.7700, F 312.427 6145	USER NAME = rmamucod	DESIGNED - KK/HM	REVISED -	STATE OF ILLINOIS DEPARTMENT OF TRANSPORTATION	STANDARD DETAILS	F.A.I. RTE.	SECTION	COUNTY	TOTAL SHEETS	SHEET NO.
		DRAWN - AM/KK	REVISED -			94	FAI 94 22 STRUCTURE 2	COOK	157	67
	PLOT SCALE = 100.0000 ' / in.	CHECKED - LF	REVISED -					CONTRACT NO. 62R62		
	PLOT DATE = 12/13/2024	DATE - 12/13/2024	REVISED -		SCALE: / SHEET OF SHEETS / STA. TO STA.		ILLINOIS	FED. AID PROJECT		

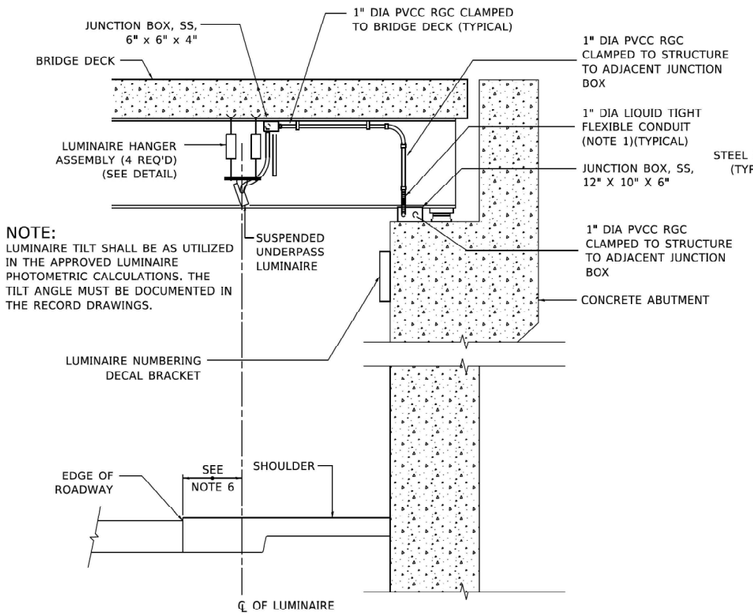

NOTE:
LUMINAIRE TILT SHALL BE AS UTILIZED IN THE APPROVED LUMINAIRE PHOTOMETRIC CALCULATIONS. THE TILT ANGLE MUST BE DOCUMENTED IN THE RECORD DRAWINGS.

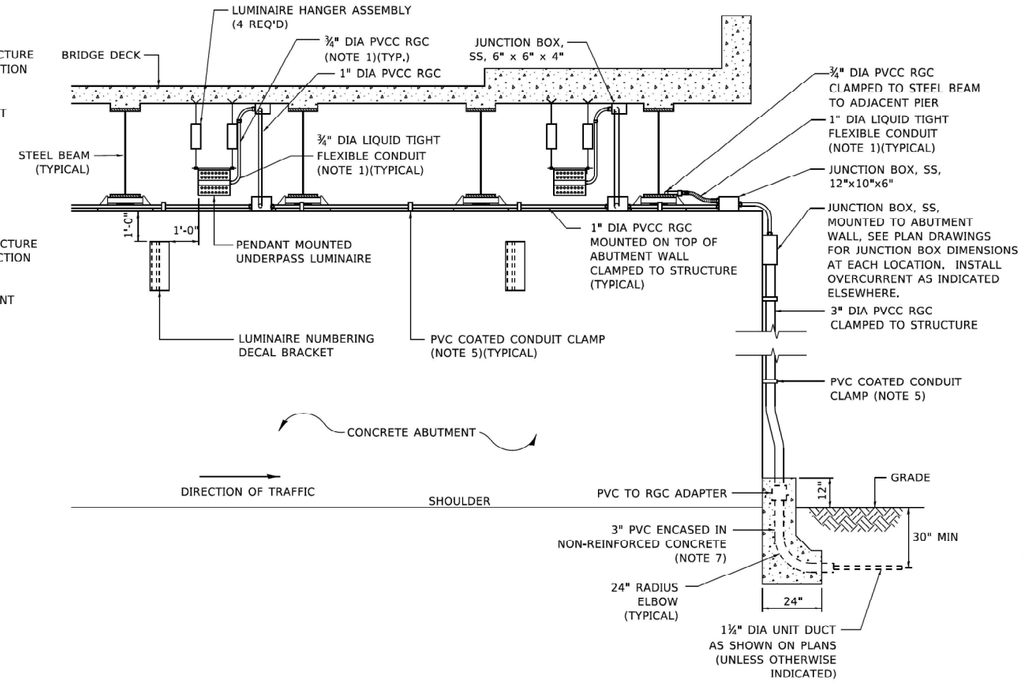

NOTES:

1. LIQUID TIGHT FLEXIBLE METAL CONDUIT, MAXIMUM LENGTH 6'-0", TYPICAL FOR EACH INSTANCE AS SHOWN. PROVIDE PVC COATED RIGID GALVANIZED STEEL CONDUIT AS REQUIRED NOT TO EXCEED 6'-0" OF FLEXIBLE LIQUID TIGHT METAL CONDUIT. LIQUID TIGHT FLEXIBLE METAL CONDUIT WILL BE INCLUDED IN THE COST OF THE CONDUIT ATTACHED TO STRUCTURE, OF THE CORRESPONDING DIA., GALVANIZED STEEL, PVC COATED PAY ITEM EXCEPT THAT " DIA. CONDUIT AND " DIA. FLEXIBLE CONDUIT SHALL BE INCLUDED IN THE COST OF UNDERPASS LUMINAIRE INSTALLATION.
2. SEE UNDERPASS LIGHTING PLANS FOR INSTALLATION LOCATION OF UNDERPASS LIGHTING LUMINAIRES.
3. THE CONTRACTOR SHALL USE APPROVED SINGLE COIL FLARED LOOP INSERTS WHEN SUSPENDED MOUNTING AN UNDERPASS LUMINAIRE TO A NEW BRIDGE DECK. THE FLARED LOOP INSERTS MUST BE CAST INTO THE CONCRETE DECK. THE CONTRACTOR IS RESPONSIBLE FOR LOCATING AND COORDINATING THE INSERT LOCATIONS FOR MOUNTING THE UNDERPASS LIGHTING SYSTEM AS SHOWN ON THE PLANS WITH THE BRIDGE DECK CONTRACTOR. SEE DETAIL.
4. THE UNDERPASS LUMINAIRE HANGER ASSEMBLY COMPLETE WITH HEAVY DUTY ANCHORS/INSERTS AND ALL APPLICABLE HARDWARE SHALL BE INCLUDED IN THE COST OF THE UNDERPASS LUMINAIRE PAY ITEM.
5. SECURE THE CONDUIT WITH PVC COATED CONDUIT CLAMPS OR CONDUIT BEAM CLAMPS AS SHOWN AT 5'-0" INTERVALS FOR LATERALS AND WITHIN 2'-0" MAXIMUM FROM ANY JUNCTION BOX, FLEXIBLE CONDUIT, OR CHANGE IN DIRECTION. ALL PVC COATED CONDUIT CLAMPS OR BEAM CLAMPS SHALL BE INCLUDED WITH THE COST OF THE "CONDUIT ATTACHED TO STRUCTURE, OF THE CORRESPONDING DIA., GALVANIZED STEEL, PVC COATED" PAY ITEM.
6. ALL UNDERPASS LUMINAIRES MUST BE CENTERED IN THE BEAM SPACE AS INDICATED ON THE PLANS UNLESS OTHERWISE DIRECTED BY THE ENGR. LUMINAIRE SETBACK SHALL BE AS INDICATED IN PLANS FOR EACH SPECIFIC UNDERPASS
7. THE CONCRETE ENCASED CONDUIT TRANSITION SHALL BE INCLUDED IN THE COST OF THE GALVANIZED RIGID STEEL CONDUIT PAY ITEMS.
8. ALL CONDUIT ATTACHED TO STRUCTURE SHALL BE PVC COATED RIGID STEEL CONDUIT (PVCC RGC) TYPICAL.
9. IN NO INSTANCE SHALL ANY UNDERPASS LUMINAIRE OR ANY OTHER ELECTRICAL EQUIPMENT BE INSTALLED BELOW THE ELEVATION OF THE BOTTOM OF THE BRIDGE BEAM WHEN OVER ANY PAVEMENT (ROADWAY OR SHOULDER).

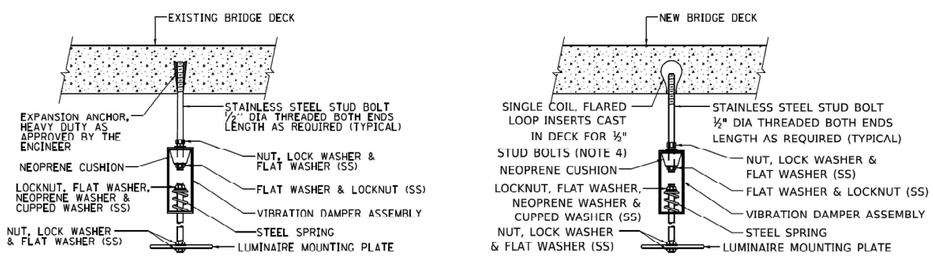

EXISTING BRIDGE DECK INSTALLATION | **NEW BRIDGE DECK INSTALLATION**

TYPICAL LUMINAIRE HANGER ASSEMBLY DETAILS

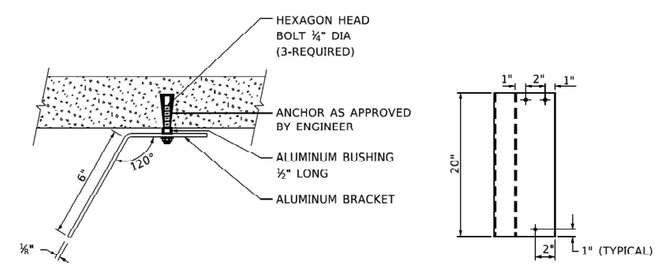

TOP VIEW | **ELEVATION**

LUMINAIRE NUMBERING DECAL BRACKET

NOT TO SCALE

PVC COATED CONDUIT BEAM CLAMP
NOT TO SCALE

PVC COATED CONDUIT CLAMP
NOT TO SCALE

USER NAME = gagglianobt	DESIGNED -	REVISED - 12-12-05	STATE OF ILLINOIS DEPARTMENT OF TRANSPORTATION
	DRAWN -	REVISED -	
PLOT SCALE = 100.0000 ' / in.	CHECKED -	REVISED -	
PLOT DATE = 1/15/2020	DATE -	REVISED -	

SUSPENDED MOUNT LED UNDERPASS LUMINAIRE INSTALLATION DETAILS

SCALE: NONE | SHEET 1 OF 1 SHEETS | STA. TO STA.

F.A. RTE.	SECTION	COUNTY	TOTAL SHEETS	SHEET NO.
BE-901		CONTRACT NO.		
		ILLINOIS FED. AID PROJECT		

MODEL: Default
FILE NAME: pw://sadarroom.dot.illinois.gov:PWIDOT\Documents\IDOT Offices\District\District 1\Projects\D151d22-23\CADData\CADsheets\ELT-22.dgn

ELT-22

DELTA ENGINEERING GROUP, LLC CONSULTING ENGINEERS, CONSTRUCTION MANAGERS, SURVEYORS 111 W JACKSON BLVD, SUITE 910 CHICAGO, IL 60604 T 312.377.7700, F 312.427 6145	USER NAME = rmamucod	DESIGNED - KK/HM	REVISED -
		DRAWN - AM/KK	REVISED -
	PLOT SCALE = 100.0000 ' / in.	CHECKED - LF	REVISED -
	PLOT DATE = 12/13/2024	DATE - 12/13/2024	REVISED -

STATE OF ILLINOIS
DEPARTMENT OF TRANSPORTATION

STANDARD DETAILS

SCALE: | SHEET OF SHEETS | STA. TO STA.

F.A.I. RTE.	SECTION	COUNTY	TOTAL SHEETS	SHEET NO.
94	FAI 94 22 STRUCTURE 2	COOK	157	68
		CONTRACT NO. 62R62		
		ILLINOIS FED. AID PROJECT		

MODEL: $MODELNAME$
FILE NAME: G:\LP220720 IDOT D1 PTB 204-001 Michigan City Rd Bridge\03A Design\01 CADD\02 Sheet\Lighting\D162R62-sht-ELT-22.dgn

NOTES:
ONE SET OF HARDWARE SUPPLIED PER COUNTERWEIGHT. HARDWARE CAN ACCEPT UP TO (2) COUNTER WEIGHTS.

COUNTERWEIGHT TO BE FABRICATED FROM A36 STEEL AND HOT DIP GALVANIZED PER ASTM A123 STANDARDS. **COUNTERWEIGHT IS NOT PAINTED.** ALL ATTACHMENT HARDWARE TO BE STAINLESS STEEL

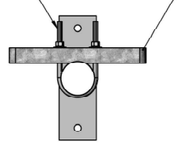

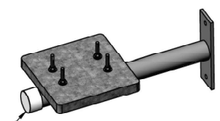

SINGLE COUNTERWEIGHT CONFIGURATION.

(1) COUNTERWEIGHT TO BE SUPPLIED PER EMPTY LUMINAIRE POSITION TO ENSURE PROPER BALANCE OF LUMINAIRE RING.

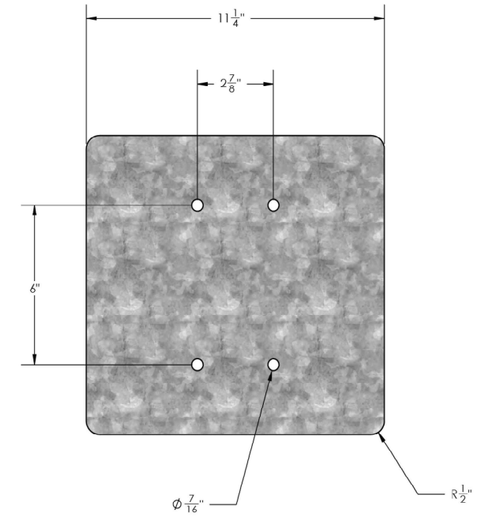

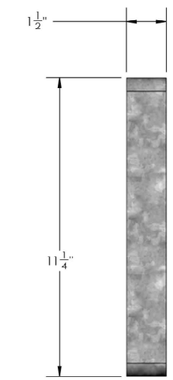

COUNTERWEIGHT TO MATCH WEIGHT OF PROPOSED LED LUMINAIRE

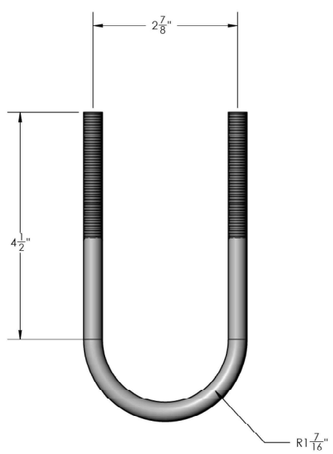

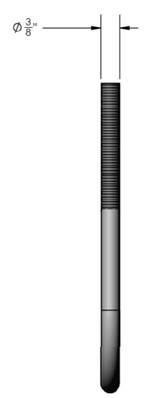

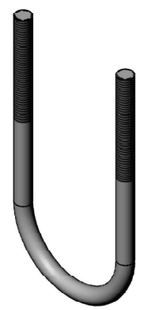

MODEL: $MODELNAME$
FILE NAME: G:\LP20720 IDOT D1 PTB 204-001 Michigan City Rd Bridge\03A Design\01 CADD\02 Sheets\Lighting\D162862-sht-ELT-23.dgn

DELTA ENGINEERING GROUP, LLC
CONSULTING ENGINEERS, CONSTRUCTION MANAGERS, SURVEYORS
111 W JACKSON BLVD, SUITE 910
CHICAGO, IL 60604
T 312.377.7700, F 312.427 6145

USER NAME = rmamucod	DESIGNED - KK/HM	REVISED -	
	DRAWN - AM/KK	REVISED -	
PLOT SCALE = 100.0000 ' / in.	CHECKED - LF	REVISED -	
PLOT DATE = 12/13/2024	DATE - 12/13/2024	REVISED -	

STATE OF ILLINOIS
DEPARTMENT OF TRANSPORTATION

HIGH MAST LUMINAIRE COUNTERWEIGHT DETAILS

SCALE: | SHEET OF SHEETS | STA. TO STA.

ELT-23

F.A.I. RTE.	SECTION	COUNTY	TOTAL SHEETS	SHEET NO.
94	FAI 94 22 STRUCTURE 2	COOK	157	69
		CONTRACT NO. 62R62		
		ILLINOIS FED. AID PROJECT		

Bench Mark: Chiseled square cut in Northeast corner of wingwall at Northwest corner of Michigan City Road Bridge Deck Elev. 613.98.

Existing Structures: S.N. 016-1068, Michigan City Road over I-94 originally built in 1948 as FA Route 122, Section 0606.2-HB. The superstructure consist of a 7 1/2" reinforced deck resting on eleven 33WF130 beams that carries 2-12' lanes and 5' sidewalks in both directions. The substructure consist of closed abutments and column piers supported on timber piles. The current bridge is a four span structure (60'-4 13/16", 75'-4 1/2", 75'-6 1/2", 60'-2 3/16") with a total length of 277'-8 3/4" from back to back of abutments, and overall width of 64'-0" out to out of deck and a skew angle of 36°41'00" ahead right. In 1983, a portion of the beam currently designated as beam 10 was replaced over pier 3. In 1990, the existing concrete deck was replaced and widened from 56'-0" to 64'-0". The widening included one new rolled steel beam on each side of the bridge and widening of the abutments and piers. In 1994, steel repairs were performed on beam 10. In 2015, steel repairs were performed on beam 11.

The existing structure will be removed and replaced. Traffic on Michigan City Road will be detoured during construction. Traffic will be staged along I-94 for pier construction.

Salvage: None

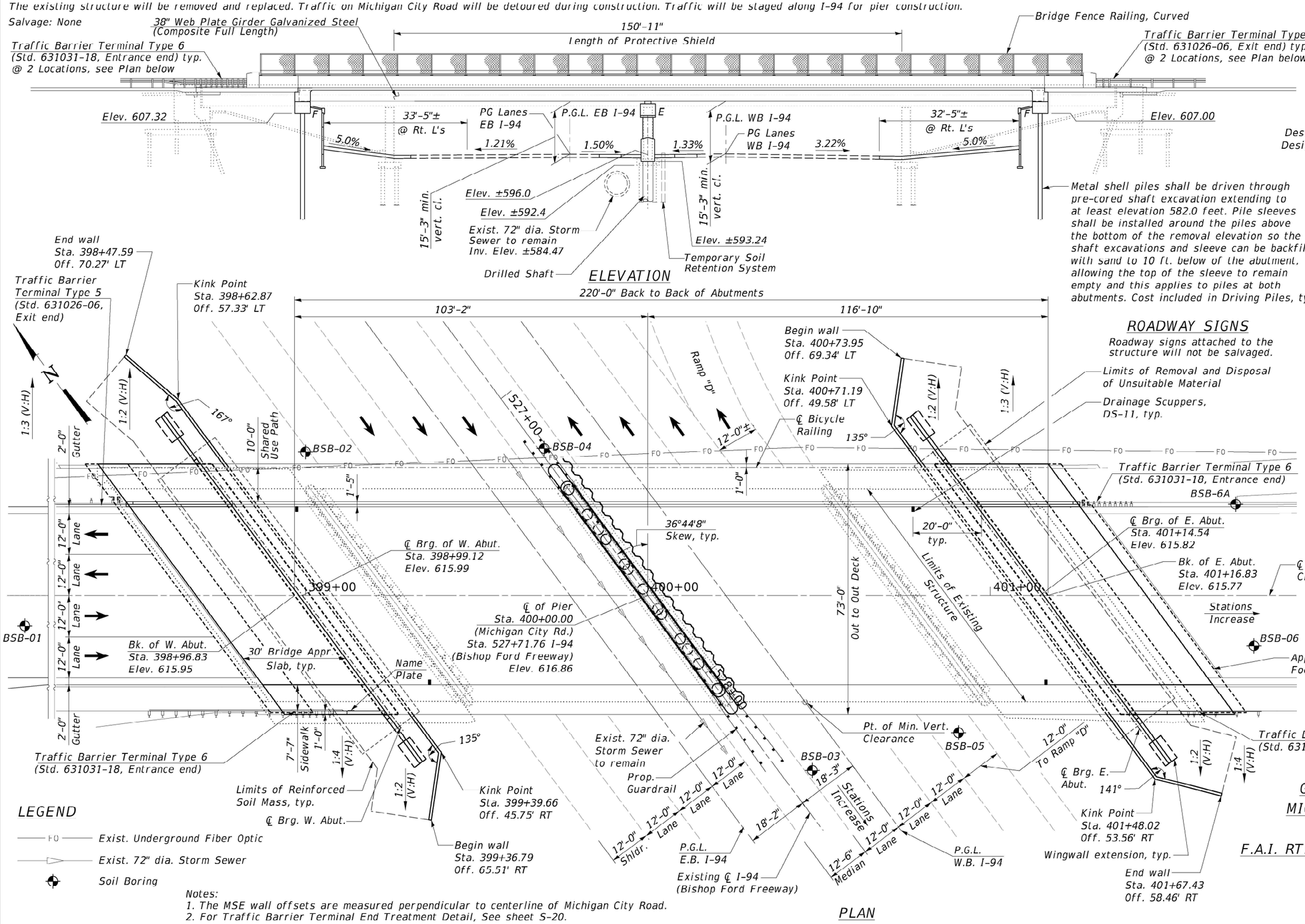

DESIGN STRESSES

FIELD UNITS

f'c = 4,000 psi (Superstructure)
f'c = 3,500 psi (Substructure)
fy = 60,000 psi (Reinforcement)
All structural steel members shall be galvanized
fy = 50,000 psi (M270 Grade 50)
fy = 36,000 psi (ASTM A709 Grade 36)

PRECAST UNITS

f'c = 4,500 psi (MSE Wall Panels)

SEISMIC DATA

Seismic Performance Zone (SPZ) = 1
Design Spectral Acceleration at 1.0 sec. (SD1) = 0.09 g
Design Spectral Acceleration at 0.2 sec. (SDS) = 0.151 g
Soil Site Class = D

LOADING HL-93

Allow 50#/sq. ft. for future wearing surface.
Live Load Deflection Limit Span/1000

DESIGN SPECIFICATIONS

2020 AASHTO LRFD Bridge Design Specifications, 9th Edition

Metal shell piles shall be driven through pre-cored shaft excavation extending to at least elevation 582.0 feet. Pile sleeves shall be installed around the piles above the bottom of the removal elevation so the shaft excavations and sleeve can be backfilled with sand to 10 ft. below of the abutment, allowing the top of the sleeve to remain empty and this applies to piles at both abutments. Cost included in Driving Piles, typ.

ROADWAY SIGNS

Roadway signs attached to the structure will not be salvaged.

STATE OF ILLINOIS ROBERT P. CHI 081-003620 CHICAGO IL LICENSED STRUCTURAL ENGINEER

Robert P. Chi, S.E.
No. 081-003620
Expires: 11/30/2026
Date:12/13/2024

APPROVED
For Structural Adequacy Only
Engineer of Bridges & Structures

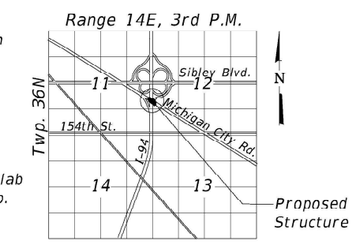

LOCATION SKETCH

LEGEND

- Exist. Underground Fiber Optic
- Exist. 72" dia. Storm Sewer
- Soil Boring

Notes:
1. The MSE wall offsets are measured perpendicular to centerline of Michigan City Road.
2. For Traffic Barrier Terminal End Treatment Detail, See sheet S-20.

GENERAL PLAN & ELEVATION
MICHIGAN CITY ROAD OVER I-94
(BISHOP FORD FREEWAY)
F.A.I. RTE. 94 SEC. FAI 94 22 STRUCTURE 2
COOK COUNTY
STATION 400+00.00
STRUCTURE NO. 016-8320

MODEL: TSL Plan
FILE NAME: G:\LP20720 IDOT D1 PTB 204-001 Michigan City Rd Bridge\03A Design\01 CADD\02 Sheet\Structures\Bridge\D160R62-001-GPE.dgn

DELTA ENGINEERING GROUP, LLC
CONSULTING ENGINEERS, CONSTRUCTION MANAGERS, SURVEYORS
111 W JACKSON BLVD. SUITE 910
CHICAGO, IL 60604
T 312.377.7700, F 312.427 6145

USER NAME = $USER$	DESIGNED - RC	REVISED -	
	DRAWN - RM	REVISED -	
PLOT SCALE = $SCALE$	CHECKED - SMK	REVISED -	
PLOT DATE = 2/25/2025	DATE - 12/13/2024	REVISED -	

STATE OF ILLINOIS
DEPARTMENT OF TRANSPORTATION

SCALE: | SHEET S-1 OF S-50 SHEETS | STA. | TO STA.

F.A.I. RTE.	SECTION	COUNTY	TOTAL SHEETS	SHEET NO.
94	FAI 94 22 Structure 2	COOK	157	70
		CONTRACT NO. 62R62		
		ILLINOIS FED. AID PROJECT		

GENERAL NOTES

1. Fasteners shall be ASTM F3125 Grade A325 Type 1, Fasteners shall be hot dip galvanized. See Special Provision for "Hot Dip Galvanizing for Structural Steel." Bolts 7/8 inches diameter. holes 15/16" inches diameter, unless otherwise noted.
2. Calculated weight of Structural Steel (Grade 50) = 621,290 Lbs.
   Calculated weight of Structural Steel (Grade 36) = 48,000 Lbs.
3. All structural steel shall be galvanized. See special provision for "Hot Dip Galvanizing for Structural Steel".
4. No field welding is permitted except as specified in the contract documents.
5. Reinforcement bars designated (E) shall be epoxy coated.
6. If the Contractor elects to use cantilever forming brackets on the exterior beams or girders, the brackets shall be placed at the same locations as required for the hardwood blocks in Article 503.06(b) of the Standard Specifications. If additional cantilever forming brackets are required, hardwood blocking shall be wedged between the exterior and first interior beam at each of these additional bracket locations.
7. Bearing seat surfaces shall be constructed or adjusted to the designated elevations within a tolerance of 1/8 inch (0.01 ft.). Adjustment shall be made either by grinding the surface or by shimming the bearings.
8. The fascia and underside of the exterior girders and their associated splice plates shall be shop painted with field touch up. The color of the final finish coat of paint shall be Interstate Green, Munsell No. 7.5G 4/8. See Special Provision for "Hot Dip Galvanizing for Structural Steel".
9. The existing structural steel coating contains lead. The Contractor shall take appropriate precautions to address the presence of lead on this project.
10. Slipforming of the parapets is not allowed.
11. The embankment configuration shown shall be the minimum that must be placed and compacted prior to construction of the abutments.
12. The Contractor shall provide a steel erection plan and calculations sealed by an Illinois licensed Structural Engineer for review and approval by the Engineer. Cost included in Furnishing and Erecting Structural Steel.
13. Concrete Sealer shall be applied to all exposed faces areas of pier.

INDEX OF SHEETS

TOTAL BILL OF MATERIAL

ITEM	UNIT	SUPER	SUB	TOTAL
Protective Coat	Sq yd	2,596		2,596
Removal of Existing Structures	Each			1
Protective shield	Sq yd	1,074		1,074
Structure Excavation	Cu yd		444	444
Removal and Disposal of Unsuitable Material for Structures	Cu yd		314	314
Concrete Structures	Cu yd		334.6	334.6
Concrete Superstructure	Cu yd	601.5		601.5
Bridge Deck Grooving (Longitudinal)	Sq yd	1,480		1,480
Concrete Superstructure (Approach slab)	Cu yd	202.8		202.8
Furnishing and Erecting Structural Steel	L sum	1		1
Stud Shear Connectors	Each	5,430		5,430
Reinforcement Bars	Pound		62,690	62,690
Reinforcement Bars, Epoxy Coated	Pound	214,630	95,100	309,730
Bicycle Railing, Curved	Foot	247		247
Bridge Fence Railing, Curved	Foot	487		487
Parapet Railing	Foot	240		240
Furnishing Metal Shell Piles 16" x 0.312"	Foot		990	990
Driving Piles	Foot		990	990
Test Pile Metal Shells	Each		2	2
Pile Shoes	Each		20	20
Name Plates	Each	1		1
Drilled Shaft in Soil	Cu yd		207	207
Drilled Shaft in Rock	Cu yd		8	8
Elastomeric Bearing Assembly, Type I	Each	10		10
Anchor Bolts, 1"	Each	40		40
Anchor Bolts, 1 1/4"	Each	20		20
Temporary Soil Retention System	Sq ft		342	342
Mechanically Stabilized Earth Retaining Wall	Sq ft		4,092	4,092
Concrete Sealer	Sq ft		2,056	2,056
Bar Terminators	Each	432	872	1,304
Drainage Scuppers, DS-11	Each	4		4
Diamond Grinding (Bridge Section)	Sq yd	1,480		1,480

STATION 400+00.00
BUILT 20__ BY
STATE OF ILLINOIS
F.A.U. RTE. 3593 SEC. FAI 94 22 Structure 2
LOADING HL-93
STRUCTURE NO. 016-8320

NAME PLATE
See Std. 515001

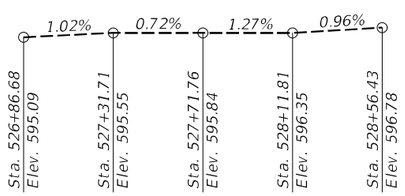

PROFILE GRADE
(Along P.G.L. EB I-94)

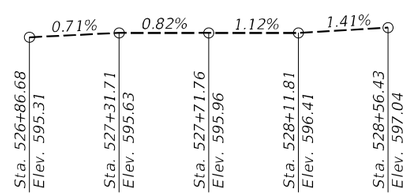

PROFILE GRADE
(Along P.G.L. WB I-94)

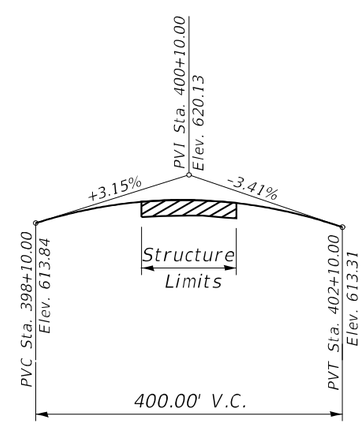

PROFILE GRADE
(Along ℄ Michigan City Road)

Note:
The profile grade shows the final elevations after grinding.

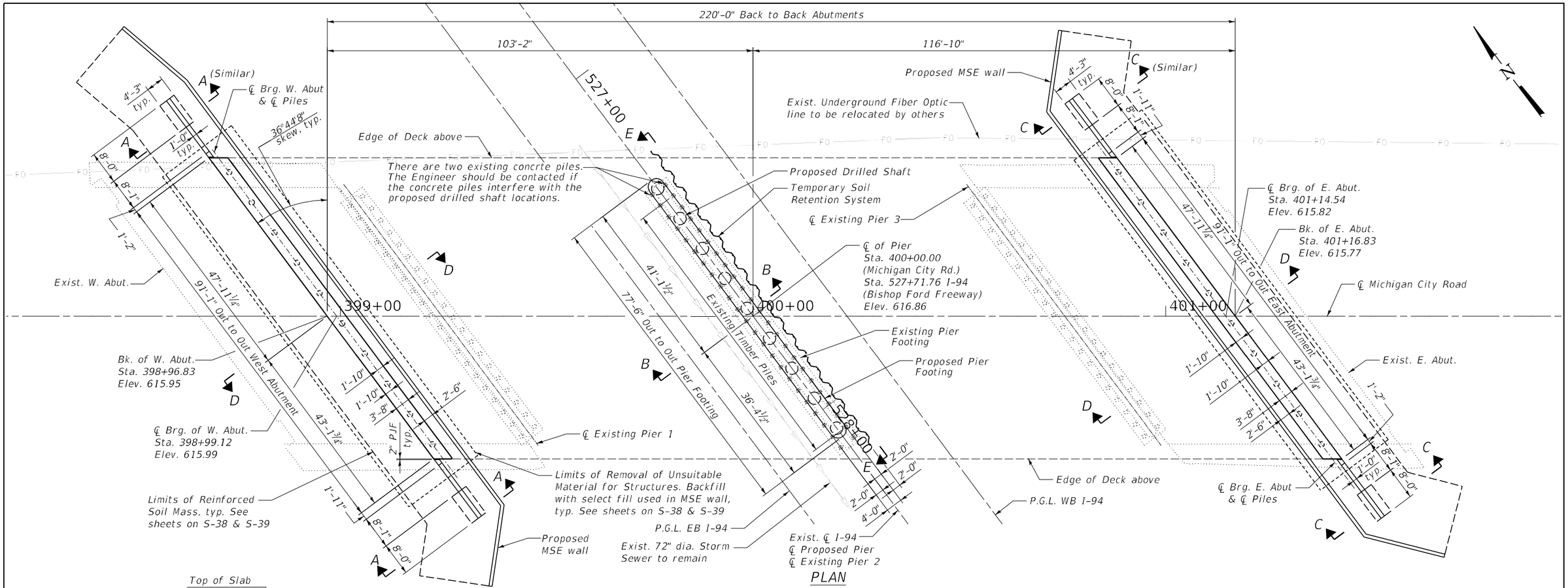

MODEL: TSL_Plan
FILE NAME: G:\P20720 IDOT D1 PTB 204-001 Michigan City Rd Bridge\03A Design\01 CADD\02 Sheets\Structures\Bridge\016R62-003-Sub.dgn

DELTA ENGINEERING GROUP, LLC
CONSULTING ENGINEERS, CONSTRUCTION MANAGERS, SURVEYORS
111 W JACKSON BLVD, SUITE 910
CHICAGO, IL 60604
T 312.377.7700, F 312.427.6145

USER NAME = $USER$	DESIGNED - RC	REVISED -	
	DRAWN - RM	REVISED -	
PLOT SCALE = $SCALE$	CHECKED - SMK	REVISED -	
PLOT DATE = 2/25/2025	DATE - 12/13/2024	REVISED -	

STATE OF ILLINOIS
DEPARTMENT OF TRANSPORTATION

SUBSTRUCTURE LAYOUT
STRUCTURE NO. 016-8320

SCALE: | SHEET S-3 OF S-50 SHEETS | STA. | TO STA.

F.A.I. RTE.	SECTION	COUNTY	TOTAL SHEETS	SHEET NO.
94	FAI 94 22 Structure 2	COOK	157	72
		CONTRACT NO. 62R62		
	ILLINOIS	FED. AID PROJECT		

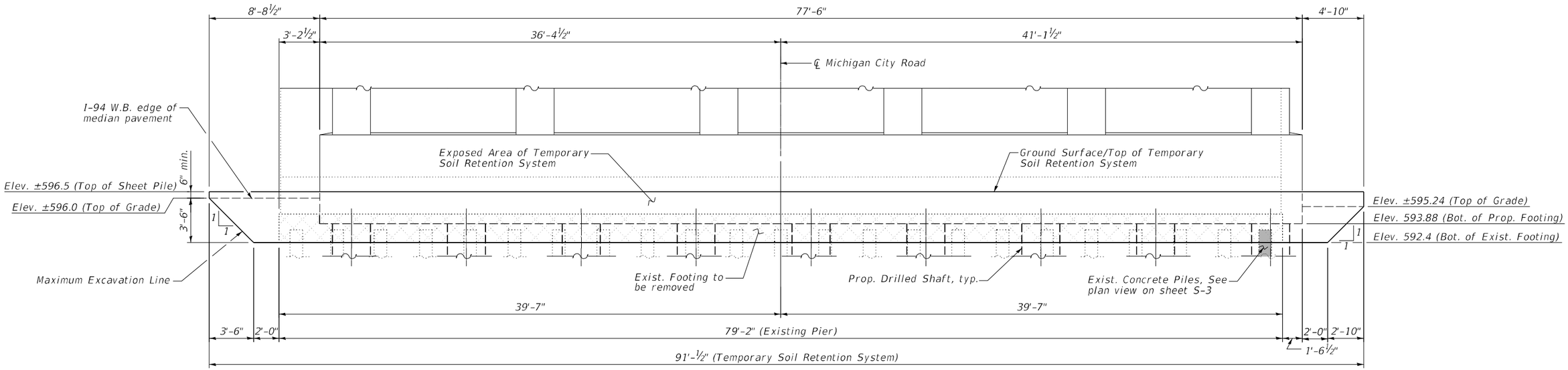

SECTION E-E
TEMPORARY SOIL RETENTION SYSTEM AT CENTER PIER
(Looking West)

BILL OF MATERIAL

Item	Unit	Quantity
Temporary Soil Retention System	Sq ft	342

MODEL: TSL_Plan
FILE NAME: G:\P20270 IDOT D1 PTB 204-001 Michigan City Rd Bridge\03A Design\01 CADD\02 Sheets\Structures\Bridge\D162R62-004-TSRS Detail.dgn

DELTA ENGINEERING GROUP, LLC
CONSULTING ENGINEERS, CONSTRUCTION MANAGERS, SURVEYORS
111 W JACKSON BLVD, SUITE 910
CHICAGO, IL 60604
T 312.377.7700, F 312.427.6145

USER NAME = $USER$	DESIGNED - RC	REVISED -
	DRAWN - RM	REVISED -
PLOT SCALE = $SCALE$	CHECKED - SMK	REVISED -
PLOT DATE = 2/25/2025	DATE - 12/13/2024	REVISED -

STATE OF ILLINOIS
DEPARTMENT OF TRANSPORTATION

TEMPORARY SOIL RETENTION SYSTEM DETAILS
STRUCTURE NO. 016-8320

SCALE: | SHEET S-4 OF S-50 SHEETS | STA. | TO STA.

F.A.I. RTE.	SECTION	COUNTY	TOTAL SHEETS	SHEET NO.
94	FAI 94 22 Structure 2	COOK	157	73
		CONTRACT NO. 62R62		
	ILLINOIS	FED. AID PROJECT		

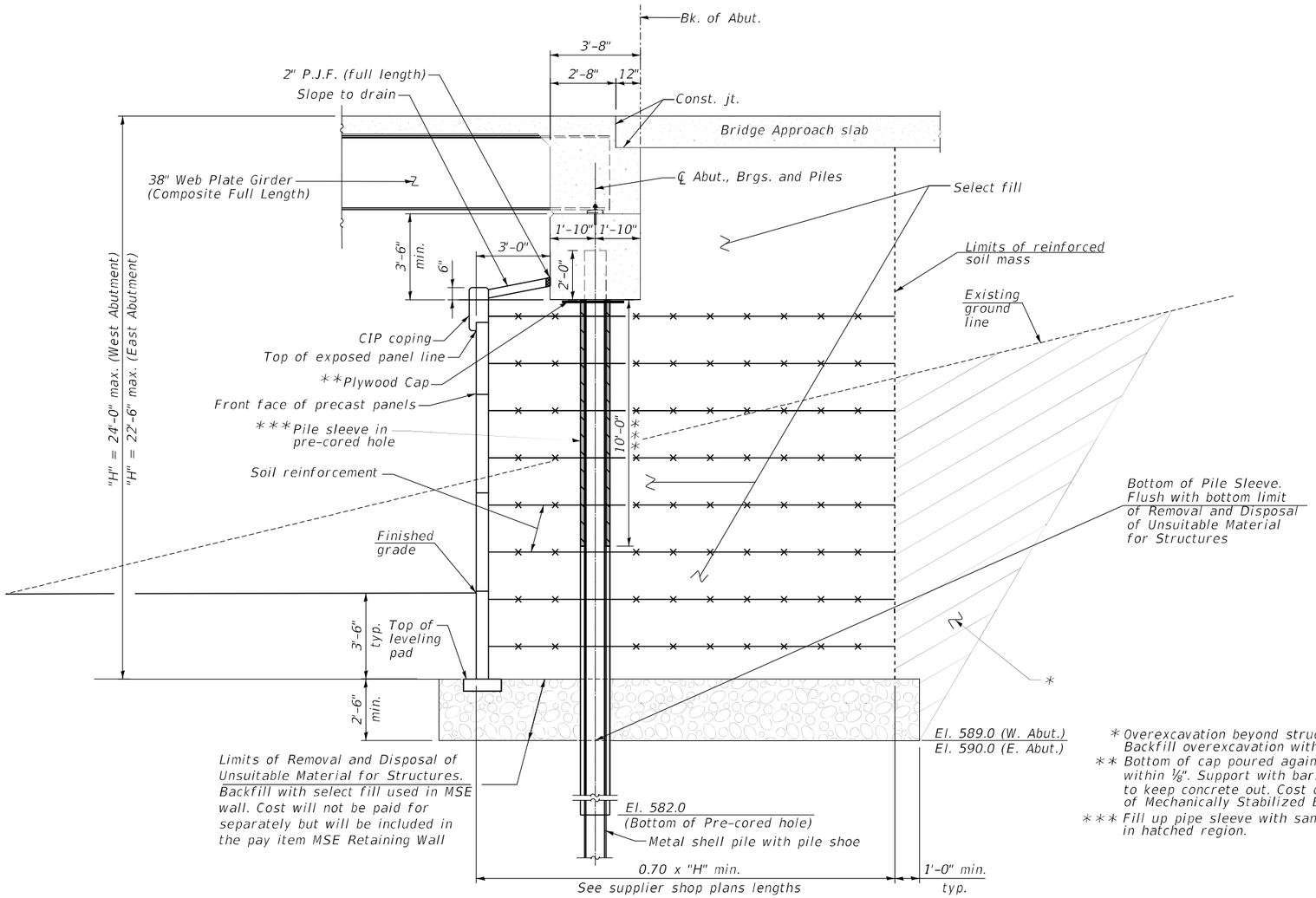

SECTION D-D
(SECTION THRU INTEGRAL ABUTMENT)

(Horiz. dim. @ Rt. ∠'s)

SEQUENCE OF CONSTRUCTION FOR MSE WALL AND ABUTMENTS

1. After removal of existing structures and excavate to bottom limits of Removal and Disposal of Unsuitable Material for Structures and backfill with select fill for MSE wall construction site. The areas are described on the sheets S-3, S-38 and S-39 and the typical section is shown on sheet S-5 for each of East and west abutment. The backfill shall be select fill used in MSE wall and compacted to a minimum of 95% of maximum dry density as determined by AASHTO T-180 Standard Test Methods for Moisture Density Relations of Soils and Soil-Aggregate Mixtures (ASTM D1557) in accordance with IDOT standard construction requirements.
2. Pre-core holes through the backfill to Elevation 582.0 below for installation of pile sleeves for metal shell piles with shoes. The pre-cored holes shall match the pile sleeves perimeter within 1/8 inch. Bury the pile sleeves by pushing them into the pre-core holes. The bottom of the sleeves ends up matching the bottom limits of the Removal and Disposal of Unsuitable Material as shown on the typical section. The top of the pipe sleeves shall match with bottom of abutment pile caps.
3. Construct MSE wall with soil reinforcements in layers.
4. Install metal shell piles and fill up the pipe sleeve with sand except leave top of 10'-0" empty as shown on the typical section. The top of piles shall have a minimum of two feet above the bottom of abutments.

* Overexcavation beyond structure excavation. This area not measured for payment. Backfill overexcavation with same material used for select fill used in MSE wall.

** Bottom of cap poured against top of plywood. Cut opening to match pile perimeter within 1/8". Support with bars tack welded to piles rated for 500 lbs. Seal gaps to keep concrete out. Cost of pipe sleeve, bars and plywood is included in the cost of Mechanically Stabilized Earth Retaining Wall.

*** Fill up pipe sleeve with sand except leave top 10'-0" empty as shown in hatched region.

MODEL: TSL_Plan
FILE NAME: G:\P20720 IDOT D1 PTB 204-001 Michigan City Rd Bridge\03A Design\01 CADD\02 Sheets\Structures\Bridge\0162R62-005-MSE Wallbet.dgn

DELTA ENGINEERING GROUP, LLC
CONSULTING ENGINEERS, CONSTRUCTION MANAGERS, SURVEYORS
111 W JACKSON BLVD, SUITE 910
CHICAGO, IL 60604
T 312.377.7700, F 312.427.6145

USER NAME = $USER$	DESIGNED - RC	REVISED -	
	DRAWN - RM	REVISED -	
PLOT SCALE = $SCALE$	CHECKED - SMK	REVISED -	
PLOT DATE = 2/25/2025	DATE - 12/13/2024	REVISED -	

STATE OF ILLINOIS
DEPARTMENT OF TRANSPORTATION

SUBSTRUCTURE DETAILS
STRUCTURE NO. 016-8320

SCALE: | SHEET S-5 OF S-50 SHEETS | STA. | TO STA.

F.A.I. RTE.	SECTION	COUNTY	TOTAL SHEETS	SHEET NO.
94	FAI 94 22 Structure 2	COOK	157	74
		CONTRACT NO. 62R62		
	ILLINOIS	FED. AID PROJECT		

STAGE 1 PHASING SEQUENCE

PHASE 1

1. Construct West and East Abutment and Wingwall.
2. Construct Pier Foundation, Columns and Pier Cap Beam.
3. Set up Temporary Shoring Tower. Use it as pivot point for placing Segment 1 Girders with elastometric bearings on Pier. Brace the Shoring Tower againts Pier with Counter weight as required.
4. Erect Segment 1 Girders over Pier. Provide adequate blocking for temporary condition.

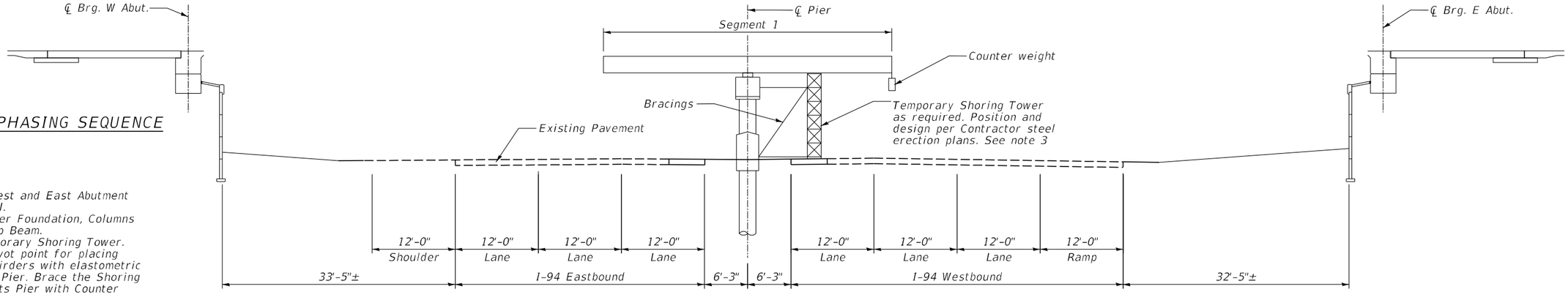

PHASE 1
(Looking North)

PHASE 2

1. Erect Segment 2 Girders over West Abutment.
2. Bolt Field Splice 1 together with Segment 1 prior to additional segment erection.

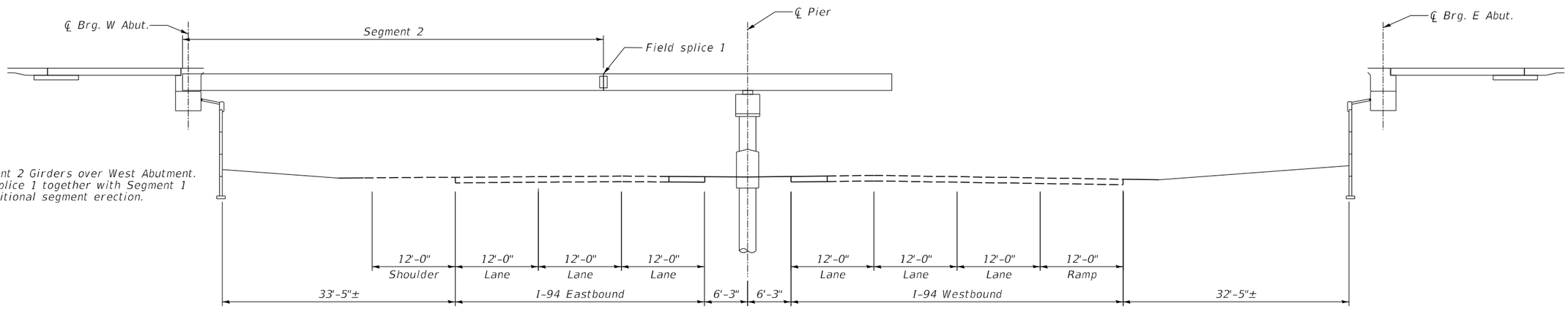

PHASE 2
(Looking North)

PHASE 3

1. Field or Shop assemble Segment 3 and 3A on the ground into one piece.
2. Erect Segment 3 and 3A over East Abutment.
3. Bolt Field Splice 2 together with Segment 1.
4. Prior to deck construction, a protective shield system shall be installed entire length of the Bridge.
5. Construct Deck and Approach slabs.

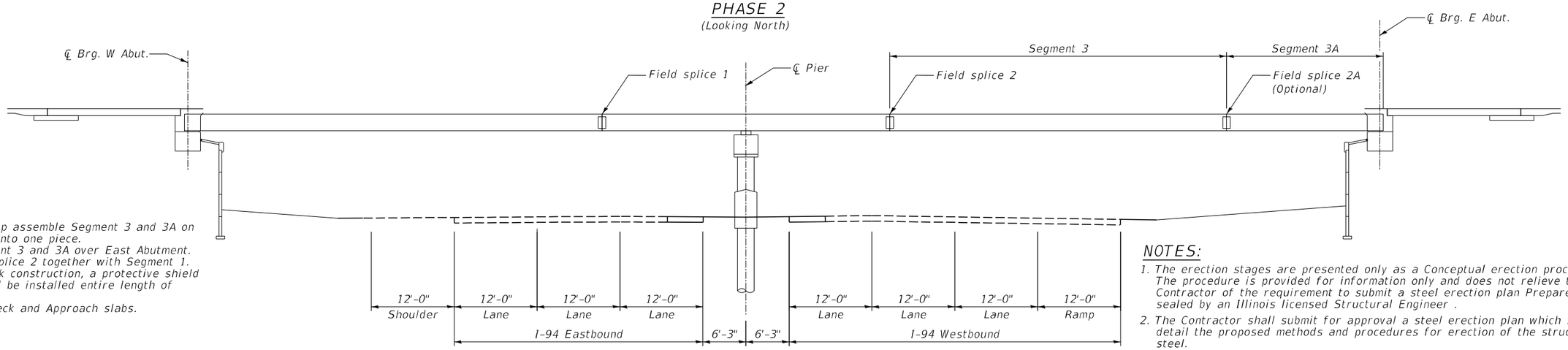

PHASE 3
(Looking North)

NOTES:

1. The erection stages are presented only as a Conceptual erection procedure. The procedure is provided for information only and does not relieve the Contractor of the requirement to submit a steel erection plan Prepared and sealed by an Illinois licensed Structural Engineer .
2. The Contractor shall submit for approval a steel erection plan which shall detail the proposed methods and procedures for erection of the structural steel.
3. Lane closures shall follow the Keeping the Expressway Open to Traffic Special Provision.

DELTA ENGINEERING GROUP, LLC
CONSULTING ENGINEERS, CONSTRUCTION MANAGERS, ILLINOIS
111 W JACKSON BLVD, SUITE 910
CHICAGO, IL 60604
T 312.377.7700, F 312.427.6145

USER NAME = $USER$	DESIGNED - RC	REVISED -	
	DRAWN - RM	REVISED -	
PLOT SCALE = $SCALE$	CHECKED - SMK	REVISED -	
PLOT DATE = 2/25/2025	DATE - 12/13/2024	REVISED -	

STATE OF ILLINOIS
DEPARTMENT OF TRANSPORTATION

SUGGESTED ERECTION PLAN
STRUCTURE NO. 016-8320

SCALE: | SHEET S-6 OF S-50 SHEETS | STA. TO STA.

F.A.I. RTE.	SECTION	COUNTY	TOTAL SHEETS	SHEET NO.
94	FAI 94 22 Structure 2	COOK	157	75

CONTRACT NO. 62R62

ILLINOIS | FED. AID PROJECT

MODEL: TSL_Plan
FILE NAME: G:\P20720 IDOT D1 PTB 204-001 Michigan City Rd Bridge\03A Design\01 CAD\02 Sheet\Structures\Bridge\016R62-006-Erection1et.dgn

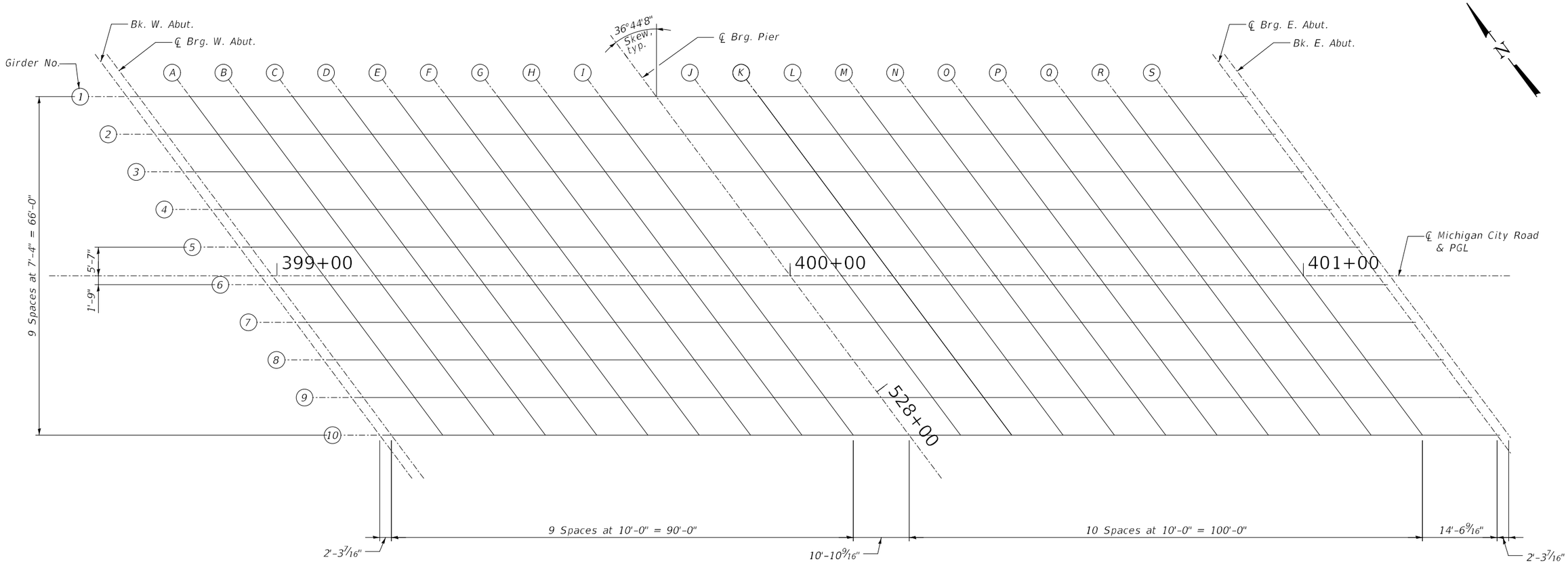

PLAN

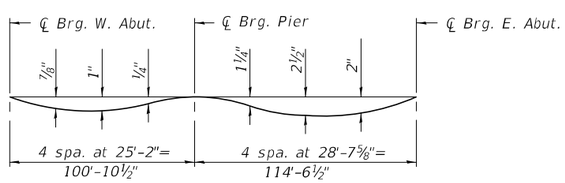

DEAD LOAD DEFLECTION DIAGRAM
GIRDERS 1 - 10

(Includes weight of concrete only.)

Note:
The above deflections are not to be used in the field if the engineer is working from the grade elevations adjusted for dead load deflections as shown on sheet S-8 and S-9.

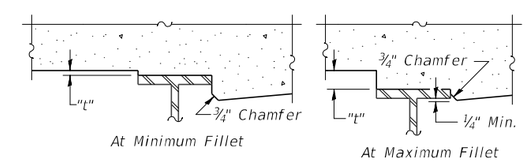

To determine "t" After all structural steel has been erected, elevations of the top flanges of the beams shall be taken at intervals shown on above. These elevations subtracted from the "Theoretical Grade Elevations Adjusted for Dead Load Deflection and Grinding" shown on sheets S-8 and S-9, minus the initial slab thickness prior to grinding, equals the fillet heights "t" above top flange of beams.

The slab is to be ground after curing to achieve smoothness, but the slab is not to be ground to elevations below the "Theoretical Grade Elevations" shown on sheets S-8 and S-9. For grinding the deck, see Special Provisions.

FILLET HEIGHTS

MODEL: $MODELNAMES
FILE NAME: G:\P220720 IDOT D1 PTB 204-001 Michigan City Rd Bridge\03A Design\01 CADD\02 Sheets\Structures\Bridge\016R62-002-TSO Elevs.dgn

DELTA ENGINEERING GROUP, LLC CONSULTING ENGINEERS, LANDSCAPE ARCHITECTS, SURVEYORS 111 W JACKSON BLVD, SUITE 910 CHICAGO, IL 60604 T 312.377.7700, F 312.427.6145	USER NAME = rmanucod	DESIGNED - RC	REVISED -	STATE OF ILLINOIS DEPARTMENT OF TRANSPORTATION	TOP OF SLAB ELEVATIONS - LAYOUT STRUCTURE NO. 016-8320	F.A.I. RTE.	SECTION	COUNTY	TOTAL SHEETS / SHEET NO.
		DRAWN - RM	REVISED -			94	FAI 94 22 Structure 2	COOK	157 / 76
	PLOT SCALE = 20:0.0000 ':" / in.	CHECKED - SMK	REVISED -					CONTRACT NO. 62R62	
	PLOT DATE = 12/13/2024	DATE - 12/13/2024	REVISED -		SCALE: SHEET S-7 OF S-50 SHEETS STA. TO STA.		ILLINOIS	FED. AID PROJECT	

GIRDER 1

Location	Station	Offset	Theoretical Grade Elevations	Theoretical Grade Elevations Adjusted For Dead Load Deflection and Grinding
Bk. W. Abut.	398+70.77	-34.92	615.11	615.13
CL. W. Brg.	398+73.06	-34.92	615.16	615.18
A	398+83.06	-34.92	615.37	615.42
B	398+93.06	-34.92	615.55	615.64
C	399+03.06	-34.92	615.72	615.83
D	399+13.06	-34.92	615.88	615.99
E	399+23.06	-34.92	616.02	616.12
F	399+33.06	-34.92	616.14	616.22
G	399+43.06	-34.92	616.24	616.30
H	399+53.06	-34.92	616.33	616.37
I	399+63.06	-34.92	616.40	616.42
CL. Brg. Pier	399+73.94	-34.92	616.46	616.48
J	399+83.94	-34.92	616.50	616.54
K	399+93.94	-34.92	616.52	616.61
L	400+03.94	-34.92	616.53	616.66
M	400+13.94	-34.92	616.52	616.70
N	400+23.94	-34.92	616.49	616.70
O	400+33.94	-34.92	616.45	616.68
P	400+43.94	-34.92	616.39	616.62
Q	400+53.94	-34.92	616.31	616.52
R	400+63.94	-34.92	616.21	616.39
S	400+73.94	-34.92	616.11	616.22
CL. E. Brg.	400+88.48	-34.92	615.92	615.94
Bk. E. Abut.	400+90.77	-34.92	615.88	615.90

GIRDER 2

Location	Station	Offset	Theoretical Grade Elevations	Theoretical Grade Elevations Adjusted For Dead Load Deflection and Grinding
Bk. W. Abut.	398+76.24	-27.58	615.12	615.14
CL. W. Brg.	398+78.53	-27.58	615.17	615.19
A	398+88.53	-27.58	615.36	615.42
B	398+98.53	-27.58	615.54	615.60
C	399+08.53	-27.58	615.70	615.80
D	399+18.53	-27.58	615.85	615.95
E	399+28.53	-27.58	615.98	616.07
F	399+38.53	-27.58	616.09	616.17
G	399+48.53	-27.58	616.18	616.24
H	399+58.53	-27.58	616.26	616.30
I	399+68.53	-27.58	616.33	616.34
CL. Brg. Pier	399+79.41	-27.58	616.38	616.40
J	399+89.41	-27.58	616.41	616.45
K	399+99.41	-27.58	616.42	616.50
L	400+09.41	-27.58	616.41	616.55
M	400+19.41	-27.58	616.39	616.57
N	400+29.41	-27.58	616.36	616.57
O	400+39.41	-27.58	616.30	616.54
P	400+49.41	-27.58	616.24	616.47
Q	400+59.41	-27.58	616.15	616.36
R	400+69.41	-27.58	616.05	616.22
S	400+79.41	-27.58	615.93	616.05
CL. E. Brg.	400+93.95	-27.58	615.73	615.75
Bk. E. Abut.	400+96.24	-27.58	615.69	615.71

GIRDER 3

Location	Station	Offset	Theoretical Grade Elevations	Theoretical Grade Elevations Adjusted For Dead Load Deflection and Grinding
Bk. W. Abut.	398+81.71	-20.25	615.32	615.34
CL. W. Brg.	398+84.01	-20.25	615.37	615.39
A	398+94.01	-20.25	615.55	615.61
B	399+04.01	-20.25	615.72	615.80
C	399+14.01	-20.25	615.87	615.97
D	399+24.01	-20.25	616.01	616.12
E	399+34.01	-20.25	616.13	616.23
F	399+44.01	-20.25	616.23	616.32
G	399+54.01	-20.25	616.32	616.38
H	399+64.01	-20.25	616.39	616.43
I	399+74.01	-20.25	616.45	616.46
CL. Brg. Pier	399+84.89	-20.25	616.49	616.51
J	399+94.89	-20.25	616.51	616.55
K	400+04.89	-20.25	616.51	616.59
L	400+14.89	-20.25	616.50	616.63
M	400+24.89	-20.25	616.47	616.65
N	400+34.89	-20.25	616.42	616.64
O	400+44.89	-20.25	616.36	616.59
P	400+54.89	-20.25	616.28	616.52
Q	400+64.89	-20.25	616.19	616.40
R	400+74.89	-20.25	616.08	616.25
S	400+84.89	-20.25	615.95	616.07
CL. E. Brg.	400+99.42	-20.25	615.73	615.75
Bk. E. Abut.	401+01.71	-20.25	615.70	615.72

GIRDER 4

Location	Station	Offset	Theoretical Grade Elevations	Theoretical Grade Elevations Adjusted For Dead Load Deflection and Grinding
Bk. W. Abut.	398+87.19	-12.92	615.57	615.59
CL. W. Brg.	398+89.48	-12.92	615.62	615.64
A	398+99.48	-12.92	615.79	615.85
B	399+09.48	-12.92	615.95	616.04
C	399+19.48	-12.92	616.10	616.20
D	399+29.48	-12.92	616.22	616.33
E	399+39.48	-12.92	616.34	616.43
F	399+49.48	-12.92	616.43	616.51
G	399+59.48	-12.92	616.51	616.57
H	399+69.48	-12.92	616.57	616.60
I	399+79.48	-12.92	616.61	616.63
CL. Brg. Pier	399+90.36	-12.92	616.65	616.67
J	400+00.36	-12.92	616.66	616.70
K	400+10.36	-12.92	616.65	616.74
L	400+20.36	-12.92	616.63	616.76
M	400+30.36	-12.92	616.59	616.77
N	400+40.36	-12.92	616.54	616.75
O	400+50.36	-12.92	616.47	616.70
P	400+60.36	-12.92	616.38	616.61
Q	400+70.36	-12.92	616.27	616.49
R	400+80.36	-12.92	616.15	616.33
S	400+90.36	-12.92	616.02	616.14
CL. E. Brg.	401+04.90	-12.92	615.79	615.81
Bk. E. Abut.	401+07.19	-12.92	615.75	615.77

GIRDER 5

Location	Station	Offset	Theoretical Grade Elevations	Theoretical Grade Elevations Adjusted For Dead Load Deflection and Grinding
Bk. W. Abut.	398+92.66	-5.59	615.79	615.81
CL. W. Brg.	398+94.95	-5.59	615.83	615.85
A	399+04.95	-5.59	616.00	616.05
B	399+14.95	-5.59	616.15	616.25
C	399+24.95	-5.59	616.28	616.38
D	399+34.95	-5.59	616.40	616.51
E	399+44.95	-5.59	616.50	616.60
F	399+54.95	-5.59	616.59	616.67
G	399+64.95	-5.59	616.66	616.72
H	399+74.95	-5.59	616.71	616.75
I	399+84.95	-5.59	616.75	616.77
CL. Brg. Pier	399+95.83	-5.58	616.77	616.79
J	400+05.83	-5.58	616.77	616.81
K	400+15.83	-5.58	616.76	616.84
L	400+25.83	-5.58	616.73	616.86
M	400+35.83	-5.58	616.68	616.86
N	400+45.83	-5.58	616.61	616.83
O	400+55.83	-5.58	616.53	616.77
P	400+65.83	-5.58	616.44	616.67
Q	400+75.83	-5.58	616.33	616.54
R	400+85.83	-5.58	616.20	616.37
S	400+95.83	-5.58	616.05	616.17
CL. E. Brg.	401+10.37	-5.58	615.81	615.83
Bk. E. Abut.	401+12.66	-5.58	615.77	615.79

GIRDER 6

Location	Station	Offset	Theoretical Grade Elevations	Theoretical Grade Elevations Adjusted For Dead Load Deflection and Grinding
Bk. W. Abut.	398+98.13	1.75	615.94	615.96
CL. W. Brg.	399+00.43	1.75	615.98	616.00
A	399+10.43	1.75	616.14	616.19
B	399+20.43	1.75	616.28	616.36
C	399+30.43	1.75	616.41	616.51
D	399+40.43	1.75	616.52	616.62
E	399+50.43	1.75	616.61	616.71
F	399+60.43	1.75	616.69	616.77
G	399+70.43	1.75	616.75	616.81
H	399+80.43	1.75	616.79	616.82
I	399+90.43	1.75	616.82	616.84
CL. Brg. Pier	400+01.30	1.75	616.83	616.85
J	400+11.30	1.75	616.82	616.86
K	400+21.30	1.75	616.80	616.88
L	400+31.30	1.75	616.76	616.89
M	400+41.30	1.75	616.70	616.88
N	400+51.30	1.75	616.63	616.85
O	400+61.30	1.75	616.54	616.78
P	400+71.30	1.75	616.44	616.67
Q	400+81.30	1.75	616.31	616.53
R	400+91.30	1.75	616.18	616.35
S	401+01.30	1.75	616.02	616.14
CL. E. Brg.	401+15.84	1.75	615.77	615.79
Bk. E. Abut.	401+18.13	1.75	615.72	615.74

GIRDER 7

Location	Station	Offset	Theoretical Grade Elevations	Theoretical Grade Elevations Adjusted For Dead Load Deflection and Grinding
Bk. W. Abut.	399+03.61	9.08	615.92	615.94
CL. W. Brg.	399+05.90	9.08	615.96	616.00
A	399+15.90	9.08	616.11	616.16
B	399+25.90	9.08	616.24	616.33
C	399+35.90	9.08	616.36	616.46
D	399+45.90	9.08	616.46	616.57
E	399+55.90	9.08	616.54	616.64
F	399+65.90	9.08	616.61	616.69
G	399+75.90	9.08	616.66	616.72
H	399+85.90	9.08	616.70	616.73
I	399+95.90	9.08	616.72	616.73
CL. Brg. Pier	400+06.78	9.08	616.72	616.74
J	400+16.78	9.08	616.70	616.74
K	400+26.78	9.08	616.67	616.75
L	400+36.78	9.08	616.62	616.75
M	400+46.78	9.08	616.56	616.73
N	400+56.78	9.08	616.47	616.69
O	400+66.78	9.08	616.38	616.61
P	400+76.78	9.08	616.26	616.50
Q	400+86.78	9.08	616.13	616.34
R	400+96.78	9.08	615.98	616.16
S	401+06.78	9.08	615.82	615.94
CL. E. Brg.	401+21.32	9.08	615.55	615.57
Bk. E. Abut.	401+23.61	9.08	615.51	615.53

GIRDER 8

Location	Station	Offset	Theoretical Grade Elevations	Theoretical Grade Elevations Adjusted For Dead Load Deflection and Grinding
Bk. W. Abut.	399+09.08	16.41	615.88	615.90
CL. W. Brg.	399+11.37	16.41	615.91	615.93
A	399+21.37	16.41	616.05	616.11
B	399+31.37	16.41	616.18	616.26
C	399+41.37	16.41	616.28	616.39
D	399+51.37	16.41	616.38	616.48
E	399+61.37	16.41	616.45	616.55
F	399+71.37	16.41	616.51	616.59
G	399+81.37	16.41	616.55	616.61
H	399+91.37	16.41	616.58	616.61
I	400+01.37	16.41	616.59	616.60
CL. Brg. Pier	400+12.25	16.41	616.58	616.60
J	400+22.25	16.41	616.55	616.60
K	400+32.25	16.41	616.51	616.60
L	400+42.25	16.41	616.45	616.59
M	400+52.25	16.41	616.38	616.56
N	400+62.25	16.41	616.29	616.51
O	400+72.25	16.41	616.18	616.42
P	400+82.25	16.41	616.06	616.29
Q	400+92.25	16.41	615.92	616.13
R	401+02.25	16.41	615.76	615.94
S	401+12.25	16.41	615.59	615.71
CL. E. Brg.	401+26.79	16.41	615.31	615.33
Bk. E. Abut.	401+29.08	16.41	615.26	615.28

GIRDER 9

Location	Station	Offset	Theoretical Grade Elevations	Theoretical Grade Elevations Adjusted For Dead Load Deflection and Grinding
Bk. W. Abut.	399+14.55	23.75	615.81	615.83
CL. W. Brg.	399+16.84	23.75	615.84	615.86
A	399+26.84	23.75	615.98	616.03
B	399+36.84	23.75	616.09	616.17
C	399+46.84	23.75	616.19	616.29
D	399+56.84	23.75	616.27	616.38
E	399+66.84	23.75	616.34	616.44
F	399+76.84	23.75	616.39	616.47
G	399+86.84	23.75	616.42	616.48
H	399+96.84	23.75	616.44	616.47
I	400+06.84	23.75	616.44	616.46
CL. Brg. Pier	400+17.72	23.75	616.42	616.44
J	400+27.72	23.75	616.39	616.43
K	400+37.72	23.75	616.34	616.42
L	400+47.72	23.75	616.27	616.40
M	400+57.72	23.75	616.19	616.37
N	400+67.72	23.75	616.09	616.30
O	400+77.72	23.75	615.97	616.21
P	400+87.72	23.75	615.84	616.07
Q	400+97.72	23.75	615.69	615.90
R	401+07.72	23.75	615.52	615.70
S	401+17.72	23.75	615.34	615.46
CL. E. Brg.	401+32.26	23.75	615.05	615.07
Bk. E. Abut.	401+34.55	23.75	615.00	615.02

GIRDER 10

Location	Station	Offset	Theoretical Grade Elevations	Theoretical Grade Elevations Adjusted For Dead Load Deflection and Grinding
Bk. W. Abut.	399+20.02	31.08	615.92	615.94
CL. W. Brg.	399+22.32	31.08	615.95	615.97
A	399+32.32	31.08	616.07	616.13
B	399+42.32	31.08	616.18	616.26
C	399+52.32	31.08	616.27	616.37
D	399+62.32	31.08	616.34	616.45
E	399+72.32	31.08	616.40	616.50
F	399+82.32	31.08	616.44	616.52
G	399+92.32	31.08	616.46	616.52
H	400+02.32	31.08	616.47	616.51
I	400+12.32	31.08	616.46	616.48
CL. Brg. Pier	400+23.20	31.08	616.43	616.45
J	400+33.20	31.08	616.39	616.43
K	400+43.20	31.08	616.33	616.42
L	400+53.20	31.08	616.26	616.39
M	400+63.20	31.08	616.17	616.34
N	400+73.20	31.08	616.06	616.27
O	400+83.20	31.08	615.93	616.17
P	400+93.20	31.08	615.79	616.03
Q	401+03.20	31.08	615.63	615.85
R	401+13.20	31.08	615.46	615.63
S	401+23.20	31.08	615.27	615.39
CL. E. Brg.	401+37.74	31.08	614.96	614.98
Bk. E. Abut.	401+40.02	31.08	614.91	614.93

℄ MICHIGAN CITY ROAD & PGL

Location	Station	Offset	Theoretical Grade Elevations	Theoretical Grade Elevations Adjusted For Dead Load Deflection and Grinding
Bk. W. Abut.	398+96.83	-00.00	615.95	615.97
CL. W. Brg.	398+99.12	-00.00	615.99	616.01
A	399+09.12	-00.00	616.15	616.20
B	399+19.12	-00.00	616.29	616.37
C	399+29.12	-00.00	616.42	616.52
D	399+39.12	-00.00	616.53	616.64
E	399+49.12	-00.00	616.63	616.72
F	399+59.12	-00.00	616.70	616.79
G	399+69.12	-00.00	616.77	616.82
H	399+79.12	-00.00	616.81	616.85
I	399+89.12	-00.00	616.84	616.86
CL. Brg. Pier	400+00.00	00.00	616.85	616.87
J	400+10.00	00.00	616.85	616.89
K	400+20.00	00.00	616.83	616.91
L	400+30.00	00.00	616.79	616.92
M	400+40.00	00.00	616.74	616.92
N	400+50.00	00.00	616.67	616.88
O	400+60.00	00.00	616.58	616.81
P	400+70.00	00.00	616.48	616.71
Q	400+80.00	00.00	616.36	616.57
R	400+90.00	00.00	616.22	616.39
S	401+00.00	00.00	616.07	616.19
CL. E. Brg.	401+14.54	00.00	615.82	615.84
Bk. E. Abut.	401+16.83	-00.00	615.78	615.80

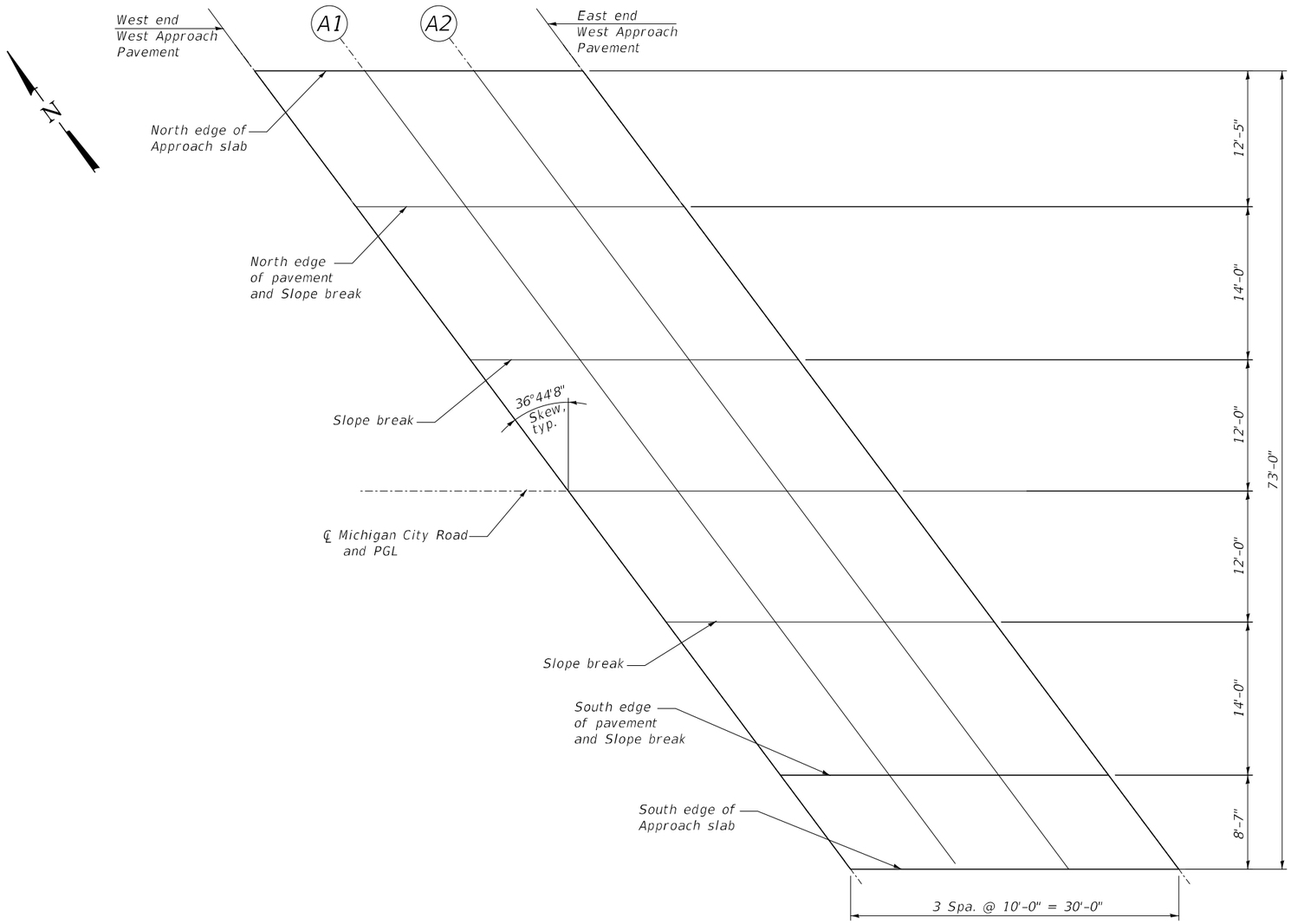

WEST APPROACH SLAB PLAN

NORTH EDGE OF APPROACH SLAB

Location	Station	Offset	Theoretical Grade Elev.	Theo. Grade Elev. Adj. For Grinding
W. End Appr. Pav't	398+39.41	-38.42	614.41	614.43
A1	398+49.41	-38.42	614.67	614.69
A2	398+59.41	-38.42	614.91	614.93
E. End Appr. Pav't	398+69.41	-38.42	615.14	615.16

NORTH EDGE OF PAVEMENT AND SLOPE BREAK

Location	Station	Offset	Theoretical Grade Elev.	Theo. Grade Elev. Adj. For Grinding
W. End Appr. Pav't	398+48.67	-26.00	614.47	614.49
A1	398+58.67	-26.00	614.71	614.73
A2	398+68.67	-26.00	614.94	614.96
E. End Appr. Pav't	398+78.67	-26.00	615.15	615.17

SLOPE BREAK

Location	Station	Offset	Theoretical Grade Elev.	Theo. Grade Elev. Adj. For Grinding
W. End Appr. Pav't	398+59.12	-12.00	615.00	615.02
A1	398+69.12	-12.00	615.23	615.25
A2	398+79.12	-12.00	615.44	615.46
E. End Appr. Pav't	398+89.12	-12.00	615.63	615.65

℄ MICHIGAN CITY ROAD AND PGL

Location	Station	Offset	Theoretical Grade Elev.	Theo. Grade Elev. Adj. For Grinding
W. End Appr. Pav't	398+68.08	0.00	615.38	615.40
A1	398+78.08	0.00	615.59	615.61
A2	398+88.08	0.00	615.79	615.81
E. End Appr. Pav't	398+98.08	0.00	615.97	615.99

SLOPE BREAK

Location	Station	Offset	Theoretical Grade Elev.	Theo. Grade Elev. Adj. For Grinding
W. End Appr. Pav't	398+77.03	12.00	615.39	615.41
A1	398+87.03	12.00	615.59	615.61
A2	398+97.03	12.00	615.77	615.79
E. End Appr. Pav't	399+07.03	12.00	615.93	615.95

SOUTH EDGE OF PAVEMENT AND SLOPE BREAK

Location	Station	Offset	Theoretical Grade Elev.	Theo. Grade Elev. Adj. For Grinding
W. End Appr. Pav't	398+87.48	26.00	615.32	615.34
A1	398+97.48	26.00	615.50	615.52
A2	399+07.48	26.00	615.66	615.68
E. End Appr. Pav't	399+17.48	26.00	615.81	615.83

SOUTH EDGE OF APPROACH SLAB

Location	Station	Offset	Theoretical Grade Elev.	Theo. Grade Elev. Adj. For Grinding
W. End Appr. Pav't	398+93.89	34.58	615.56	615.58
A1	399+03.89	34.58	615.73	615.75
A2	399+13.89	34.58	615.89	615.91
E. End Appr. Pav't	399+23.89	34.58	616.02	616.04

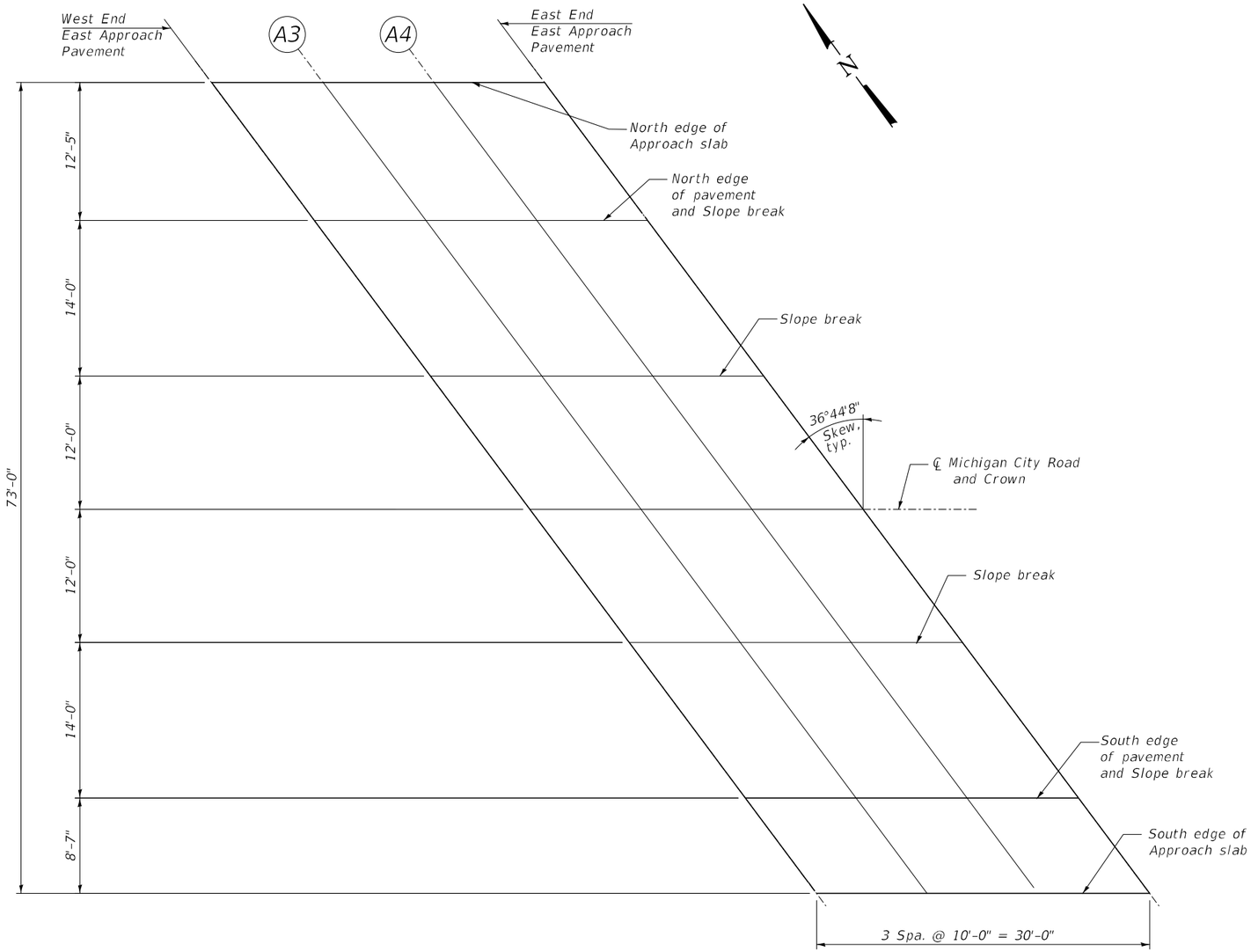

EAST APPROACH SLAB PLAN

NORTH EDGE OF APPROACH SLAB

Location	Station	Offset	Theoretical Grade Elev.	Theo. Grade Elev. Adj. For Grinding
W. End Appr. Pav't	400+86.91	-38.42	615.99	616.01
A3	400+96.91	-38.42	615.84	615.86
A4	401+06.91	-38.42	615.68	615.70
E. End Appr. Pav't	401+16.91	-38.42	615.50	615.52

NORTH EDGE OF PAVEMENT AND SLOPE BREAK

Location	Station	Offset	Theoretical Grade Elev.	Theo. Grade Elev. Adj. For Grinding
W. End Appr. Pav't	400+96.17	-26.00	615.67	615.69
A3	401+06.17	-26.00	615.51	615.53
A4	401+16.17	-26.00	615.33	615.35
E. End Appr. Pav't	401+26.17	-26.00	615.13	615.15

SLOPE BREAK

Location	Station	Offset	Theoretical Grade Elev.	Theo. Grade Elev. Adj. For Grinding
W. End Appr. Pav't	401+06.62	-12.00	615.78	615.80
A3	401+16.62	-12.00	615.60	615.62
A4	401+26.62	-12.00	615.40	615.42
E. End Appr. Pav't	401+36.62	-12.00	615.19	615.21

℄ MICHIGAN CITY ROAD AND PGL

Location	Station	Offset	Theoretical Grade Elev.	Theo. Grade Elev. Adj. For Grinding
W. End Appr. Pav't	401+15.58	0.00	615.80	615.82
A3	401+25.58	0.00	615.60	615.62
A4	401+35.58	0.00	615.39	615.41
E. End Appr. Pav't	401+45.58	0.00	615.17	615.19

SLOPE BREAK

Location	Station	Offset	Theoretical Grade Elev.	Theo. Grade Elev. Adj. For Grinding
W. End Appr. Pav't	401+24.53	12.00	615.45	615.47
A3	401+34.53	12.00	615.24	615.26
A4	401+44.53	12.00	615.01	615.03
E. End Appr. Pav't	401+54.53	12.00	614.77	614.80

SOUTH EDGE OF PAVEMENT AND SLOPE BREAK

Location	Station	Offset	Theoretical Grade Elev.	Theo. Grade Elev. Adj. For Grinding
W. End Appr. Pav't	401+34.98	26.00	614.95	614.97
A3	401+44.98	26.00	614.72	614.74
A4	401+54.98	26.00	614.48	614.50
E. End Appr. Pav't	401+64.98	26.00	614.22	614.24

SOUTH EDGE OF APPROACH SLAB

Location	Station	Offset	Theoretical Grade Elev.	Theo. Grade Elev. Adj. For Grinding
W. End Appr. Pav't	401+41.39	34.58	614.93	614.95
A3	401+51.39	34.58	614.70	614.72
A4	401+61.39	34.58	614.44	614.46
E. End Appr. Pav't	401+71.39	34.58	614.17	614.19

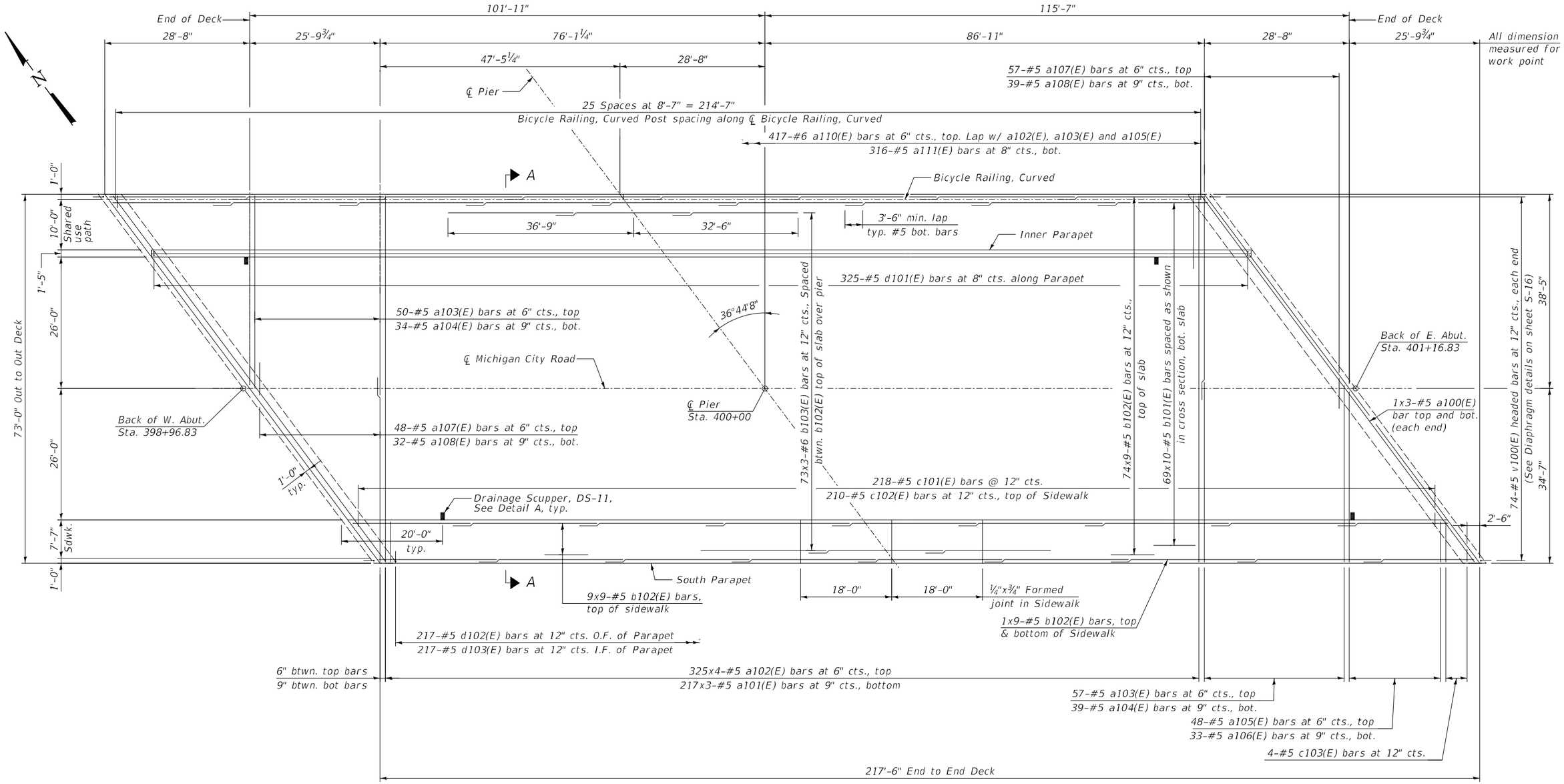

DECK PLAN

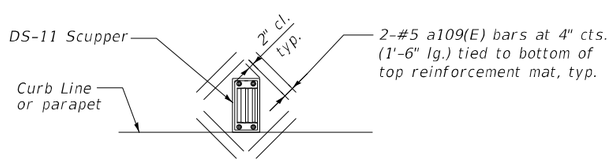

DETAIL A PLAN

Note: Cut longitudinal reinforcement to clear drainage scuppers.

MINIMUM BAR LAP

#5 Bar = 3'-6"
#6 Bar = 3'-7"

NOTES:

1. Bars indicated thus 3x8 #5 etc. indicates 3 lines of bars with 8 lengths per line.
2. For deck cross section, see Sht. S-13.
3. For parapet elevations, see Sht. S-15.
4. For bar list and bent bar details, see Sht. S-14.
5. See field cutting diagram on sheet S-14.
6. For deck pouring sequence, sheet on S-14.

MODEL: TSL_Plan
FILE NAME: G:\P22020 IDOT D1 PTB 204-001 Michigan City Rd Bridge\03A Design\01 CADD\02 Sheets\Structures\Bridge\016R62-012-Super_Deck_Rh.dgn

DELTA ENGINEERING GROUP, LLC
CONSULTING ENGINEERS, CONSTRUCTION MANAGERS, SURVEYORS
111 W JACKSON BLVD, SUITE 910
CHICAGO, IL 60604
T 312.377.7700, F 312.427.6145

USER NAME = $USER$	DESIGNED - RC	REVISED -	
	DRAWN - RM	REVISED -	
PLOT SCALE = $SCALE$	CHECKED - SMK	REVISED -	
PLOT DATE = 2/25/2025	DATE - 12/13/2024	REVISED -	

STATE OF ILLINOIS
DEPARTMENT OF TRANSPORTATION

SUPERSTRUCTURE DECK PLAN
STRUCTURE NO. 016-8320

SCALE: | SHEET S-12 OF S-50 SHEETS | STA. | TO STA.

F.A.I. RTE.	SECTION	COUNTY	TOTAL SHEETS	SHEET NO.
94	FAI 94 22 Structure 2	COOK	157	81
		CONTRACT NO. 62R62		
	ILLINOIS	FED. AID PROJECT		

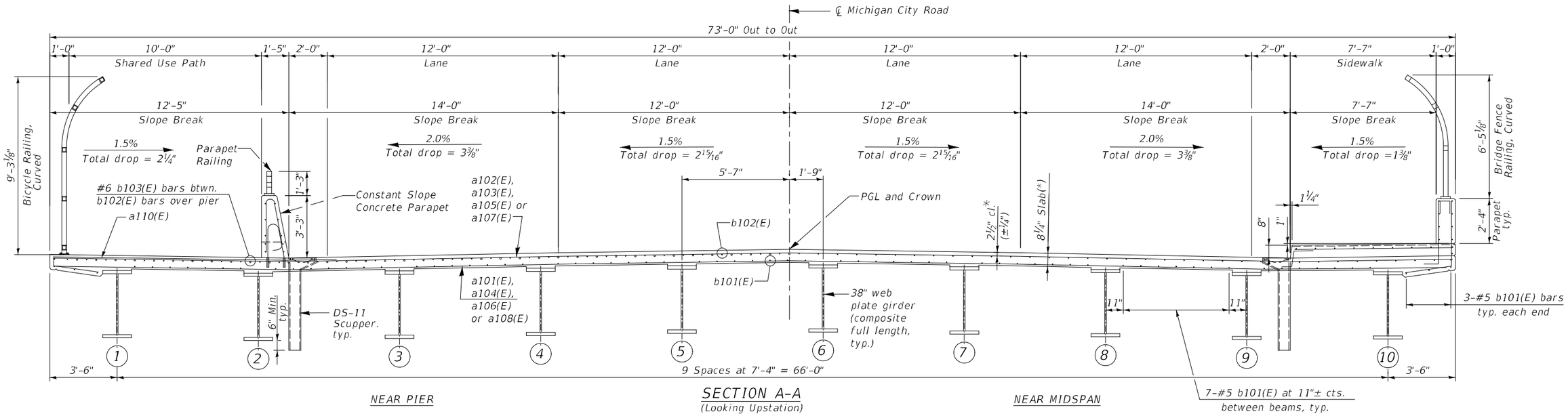

SECTION A-A
(Looking Upstation)

*Prior to grinding

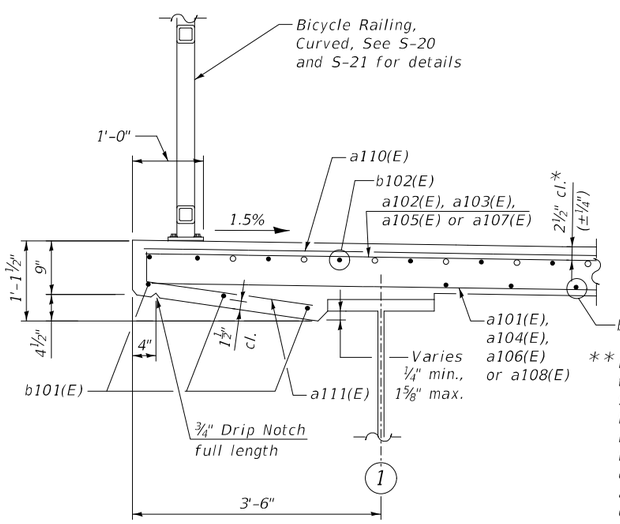

SECTION THRU NORTH SIDE OF DECK AND BICYCLE RAILING, CURVED

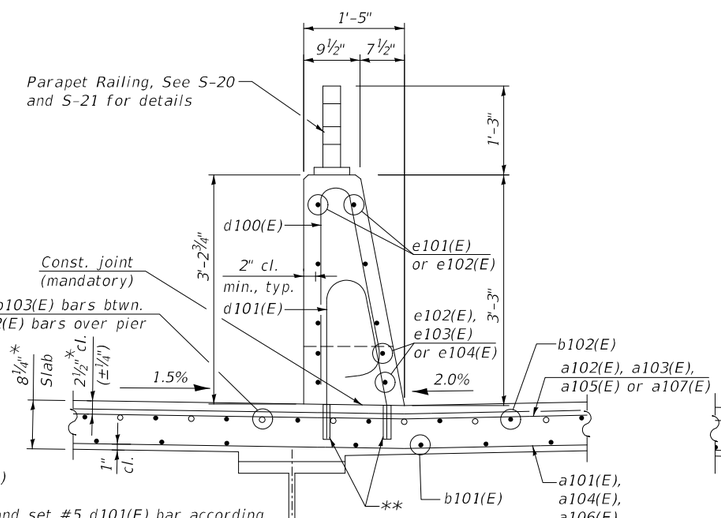

** Drill and set #5 d101(E) bar according to Article 509.06 of the Standard Specifications. Drilled holes shall be roughened or scored per manufacturer's recommendations. Maximum depth of hole shall not exceed 6". Contractor shall take all necessary precautions to prevent drilled hole interference with deck reinforcement bars. Locate drilled holes to miss transverse bars in deck.

SECTION THRU INNER PARAPET

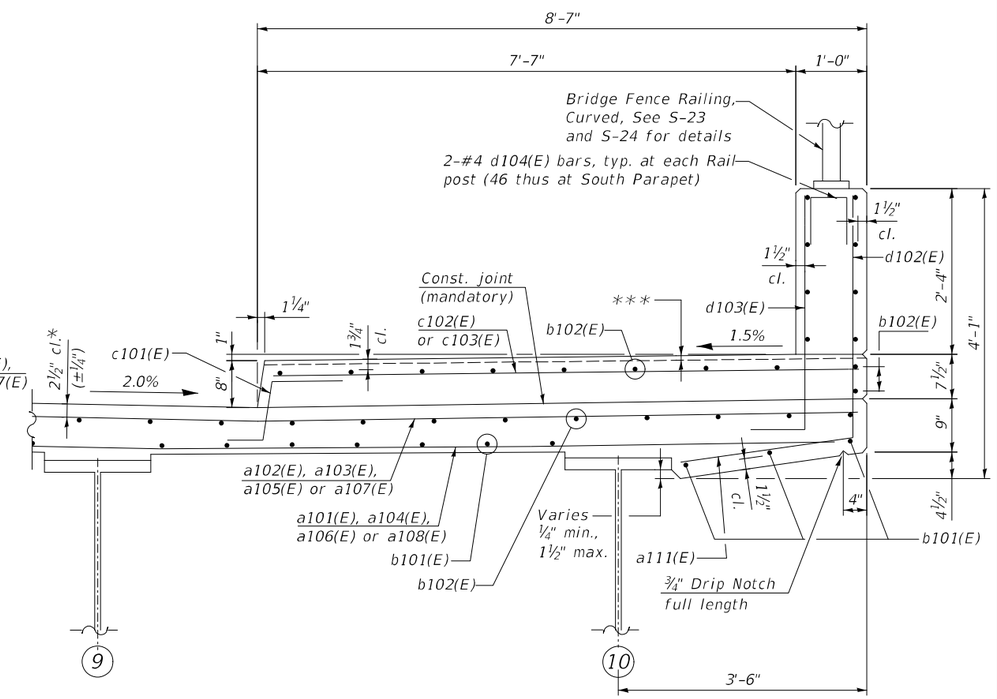

SECTION THRU SIDEWALK & SOUTH PARAPET

*** ¼" x ¾" Formed joint with Bridge Relief joint Sealer (full width along joint backer rod not required) at Pier and either side. See sheet S-12.

MODEL: TSL_Plan
FILE NAME: G:\P220720 IDOT D1 PTB 204-001 Michigan City Rd Bridge\03A Design\01 CADD\02 Sheets\Structures\Bridge\0162R62-013-Super_Dec1Det1.dgn

DELTA ENGINEERING GROUP, LLC
CONSULTING ENGINEERS, CONSTRUCTION MANAGERS, SURVEYORS
111 W JACKSON BLVD, SUITE 910
CHICAGO, IL 60604
T 312.377.7700, F 312.427.6145

USER NAME = $USER$	DESIGNED - RC	REVISED -	
	DRAWN - RM	REVISED -	
PLOT SCALE = $SCALE$	CHECKED - SMK	REVISED -	
PLOT DATE = 2/25/2025	DATE - 12/13/2024	REVISED -	

STATE OF ILLINOIS
DEPARTMENT OF TRANSPORTATION

SUPERSTRUCTURE CROSS SECTION
STRUCTURE NO. 016-8320

SCALE: | SHEET S-13 OF S-50 SHEETS | STA. | TO STA.

F.A.I. RTE.	SECTION	COUNTY	TOTAL SHEETS	SHEET NO.
94	FAI 94 22 Structure 2	COOK	157	82
		CONTRACT NO. 62R62		
		ILLINOIS	FED. AID PROJECT	

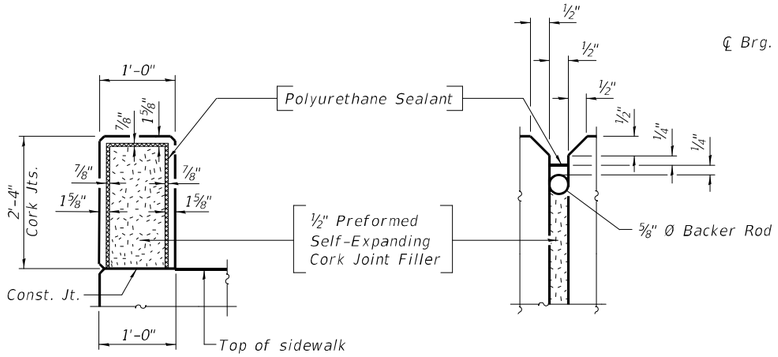

PARAPET JOINT DETAILS

Notes:
The Polyurethane Sealant shall be according to Article 1050.04 of the Std. Spec. and the color shall be gray.

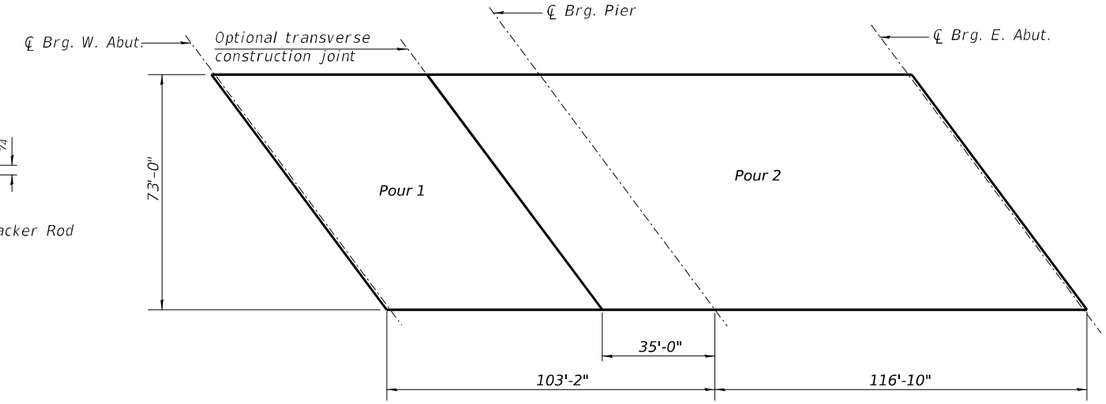

DECK POURING SEQUENCE

When the deck pour is stopped for the day at one or more of the transverse bonded construction joints in the deck pouring sequence as shown, the next pour shall not be made until both of the following are met:

1. At least 72 hours shall be have elasped from the end of the previous pour.
2. The concrete strength shall have attained a minimum flexural strength of 675 psi or a minimum compressive strength of 4,000 psi.

SUPERSTRUCTURE BILL OF MATERIAL

Bar	No.	Size	Length	Shape
a100(E)	12	#5	32'-9"	
a101(E)	585	#5	26'-9"	
a102(E)	1300	#5	20'-0"	
a103(E)	57	#5	38'-0"	
a104(E)	35	#5	38'-0"	
a105(E)	48	#5	37'-5"	
a106(E)	29	#5	37'-5"	
a107(E)	57	#5	48'-3"	
a108(E)	35	#5	48'-3"	
a109(E)	32	#5	1'-6"	
a110(E)	417	#6	14'-0"	
a111E)	316	#6	2'-11"	
b101(E)	690	#5	25'-0"	
b102(E)	772	#5	27'-3"	
b103(E)	219	#6	26'-0"	
c101(E)	218	#5	8'-3"	
c102(E)	210	#5	8'-3"	
c103(E)	4	#5	11'-2"	
d100(E)	325	#5	6'-4¼"	
d101(E)	325	#5	5'-2"	
d102(E)	217	#4	5'-10"	
d103(E)	217	#6	4'-5"	
d104(E)	104	#4	2'-2"	
e101(E)	182	#4	13'-5"	
e102(E)	36	#4	18'-8"	
e103(E)	12	#4	29'-5"	
e104(E)	12	#4	34'-0"	
m100(E)	30	#6	33'-2"	
m101(E)	72	#6	8'-10"	
m102(E)	16	#6	4'-0"	
s100(E)	142	#5	10'-6"	
s101(E)	142	#5	11'-6"	
v100(E)	148	#5	3'-1"	

Item	Unit	Quantity
Protective Coat	Sq. Yd.	2,034
Concrete Superstructure	Cu. Yd.	574.7
Bridge Deck Grooving (Longitudinal)	Sq. Yd.	1,160
Reinforcement Bars, Epoxy Coated	Pound	125,740
Diamond Grinding (Bridge Section)	Sq. Yd.	1,160

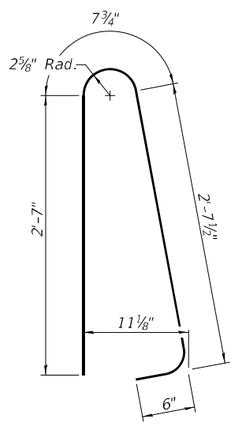

BAR d100(E)

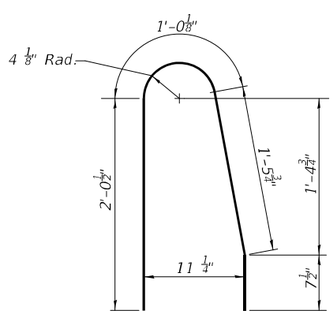

BAR d101(E)

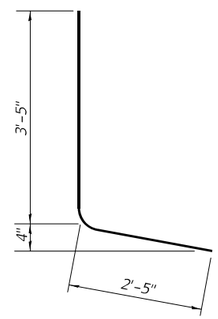

BAR d102(E)

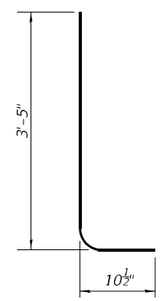

BAR d103(E)

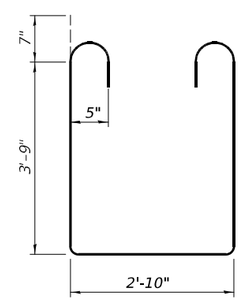

BAR s101(E)

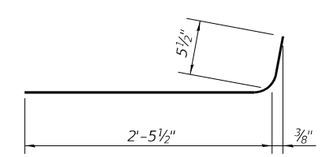

BAR a111(E)

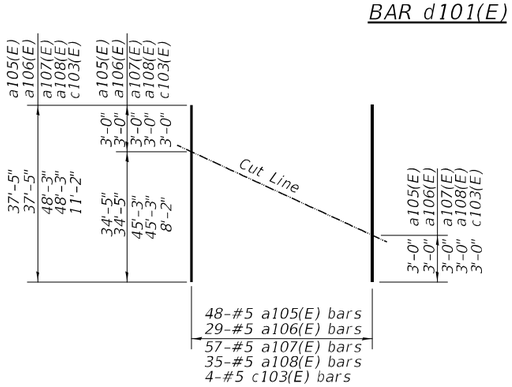

FIELD CUTTING DIAGRAM

Order a105(E), a106(E), a107(E), a108(E) and c103(E) full length.
Cut as shown and use remainder of bars in opposite wing.

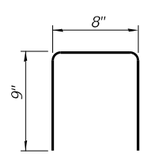

BAR d104(E)

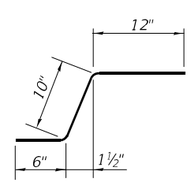

BAR c101(E)

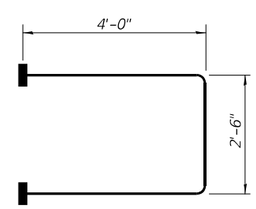

BAR s100(E)
(Headed-284 #5 Bar Terminators)

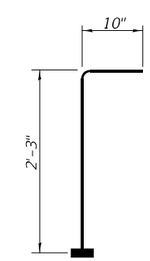

BAR v100(E)
(Headed-148 #5 Bar Terminators)

MINIMUM BAR LAP

#5 Bar = 3'-6"
#6 Bar = 3'-7"

Note:
1. Bar Terminators, paid for separately. See Total Bill of Material.

DELTA ENGINEERING GROUP, LLC
CONSULTING ENGINEERS, CONSTRUCTION MANAGERS, SURVEYORS
111 W. JACKSON BLVD, SUITE 910
CHICAGO, IL 60604
T 312.377.7700, F 312.427.6145

USER NAME = $USER$	DESIGNED - RC	REVISED -
	DRAWN - RM	REVISED -
PLOT SCALE = $SCALE$	CHECKED - SMK	REVISED -
PLOT DATE = 2/25/2025	DATE - 12/13/2024	REVISED -

STATE OF ILLINOIS
DEPARTMENT OF TRANSPORTATION

SUPERSTRUCTURE DETAILS
STRUCTURE NO. 016-8320

SCALE: | SHEET S-14 OF S-50 SHEETS | STA. | TO STA.

F.A.I. RTE.	SECTION	COUNTY	TOTAL SHEETS	SHEET NO.
94	FAI 94 22 Structure 2	COOK	157	83
		CONTRACT NO. 62R62		
		ILLINOIS	FED. AID PROJECT	

MODEL: TSI_Plan
FILE NAME: G:\P220720 IDOT D1 PTB 204-001 Michigan City Rd Bridge\03A Design\01 CAD\0.02 Sheets\Structures\BridgeD162R62-014-Super Deck0d02.dgn

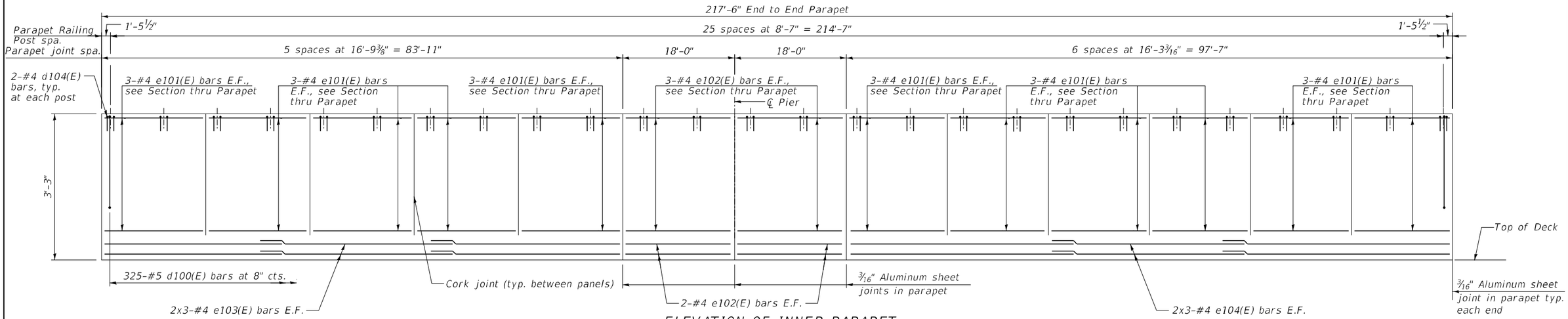

ELEVATION OF INNER PARAPET

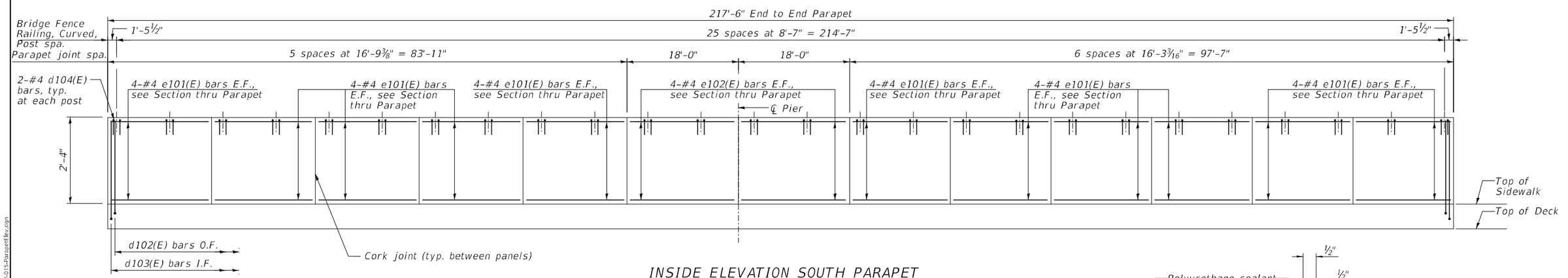

INSIDE ELEVATION SOUTH PARAPET

MINIMUM BAR LAP

#4 Bar = 2'-8"

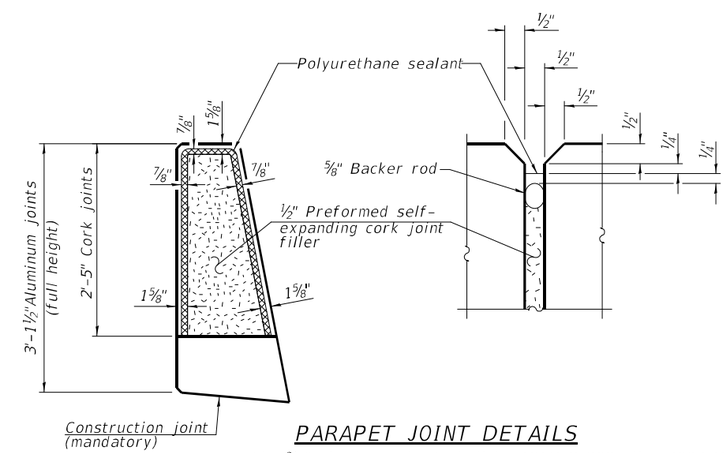

PARAPET JOINT DETAILS

The ³⁄₁₆" aluminum sheet shall be ASTM B 209 alloy 3003-H14 and coated with 5 mils of either bitumen paint or epoxy paint to minimize reaction with wet concrete. Cost included with Concrete Superstructure.

The polyurethane sealant shall be according to Article 1050.04 of the Standard Specifications and the color shall be gray.

MODEL: $MODEL NAMES
FILE NAME: G:\P20720 IDOT D1 PTB 204-001 Michigan City Rd Bridge\03A Design\01 CAD\02 Sheets\Structures\Bridge\016R62-015-ParapetRev.dgn

DELTA ENGINEERING GROUP, LLC
CONSULTING ENGINEERS, CONSTRUCTION MANAGERS, ACCOUNTANTS
111 W JACKSON BLVD, SUITE 910
CHICAGO, IL 60604
T 312.377.7700, F 312.427.6145

USER NAME = rmamucod	DESIGNED - RC	REVISED -	
	DRAWN - RM	REVISED -	
PLOT SCALE = 16:0.0000 ':" / in.	CHECKED - SMK	REVISED -	
PLOT DATE = 12/13/2024	DATE - 12/13/2024	REVISED -	

STATE OF ILLINOIS
DEPARTMENT OF TRANSPORTATION

PARAPET ELEVATION
STRUCTURE NO. 016-8320

SCALE: | SHEET S-15 OF S-50 SHEETS | STA. | TO STA.

F.A.I. RTE.	SECTION	COUNTY	TOTAL SHEETS	SHEET NO.
94	FAI 94 22 Structure 2	COOK	157	84
		CONTRACT NO. 62R62		
		ILLINOIS	FED. AID PROJECT	

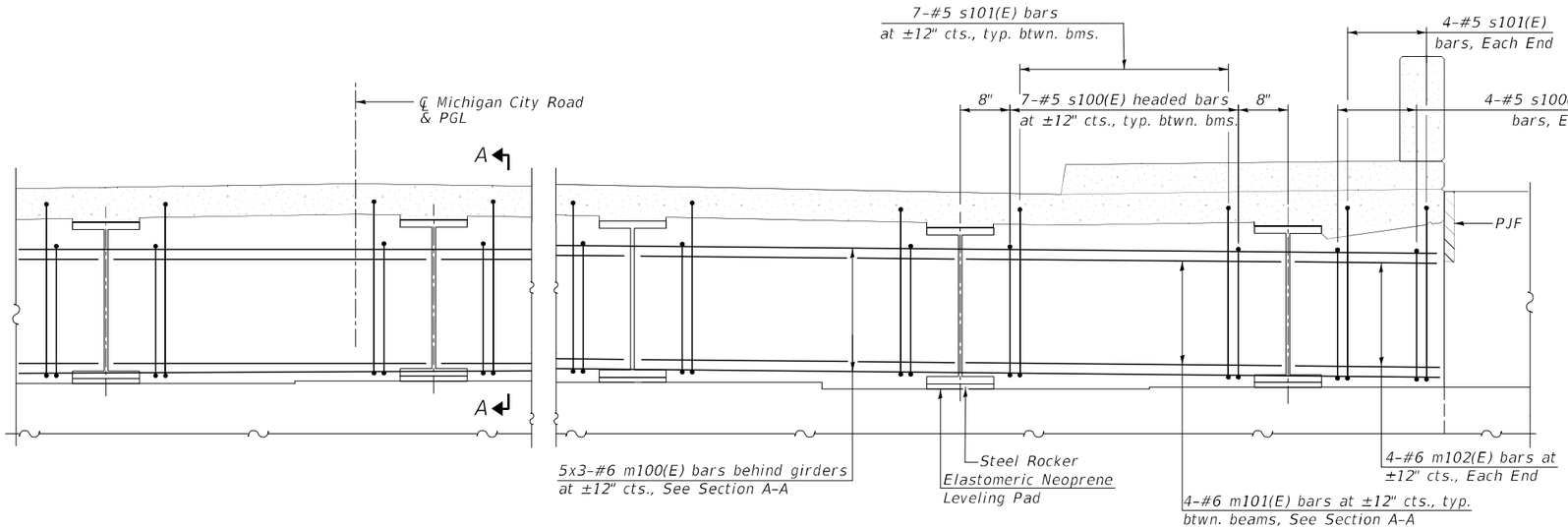

DIAPHRAGM AT ABUTMENT

(Full Diaphragm not shown for clarity)
(East Abutment shown, West Abutment Similar)

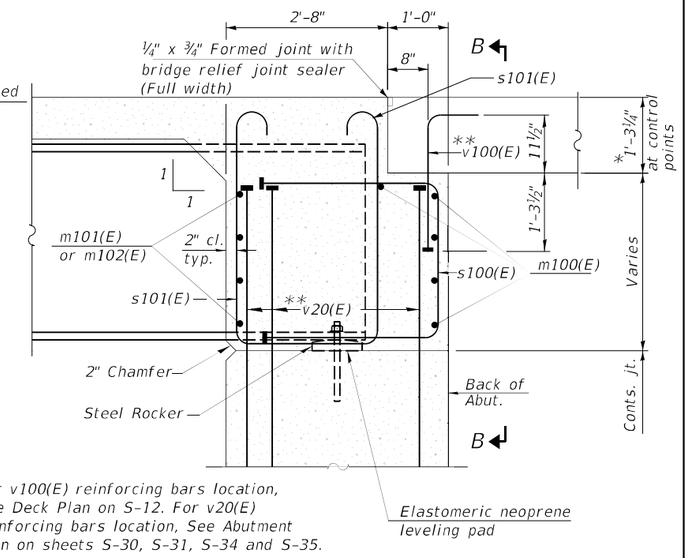

**For v100(E) reinforcing bars location, See Deck Plan on S-12. For v20(E) reinforcing bars location, See Abutment Plan on sheets S-30, S-31, S-34 and S-35.

SECTION A-A

(at Rt. L's)

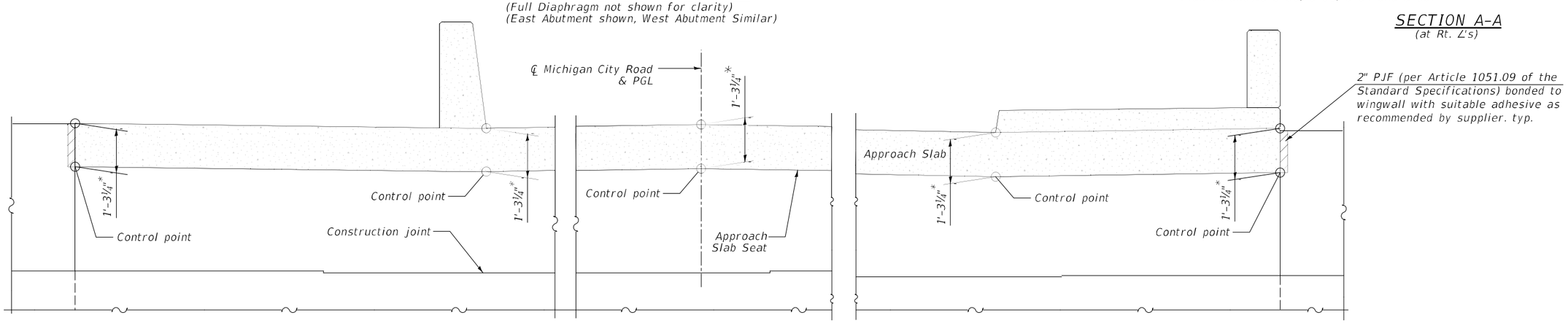

*Prior to grinding

VIEW B-B

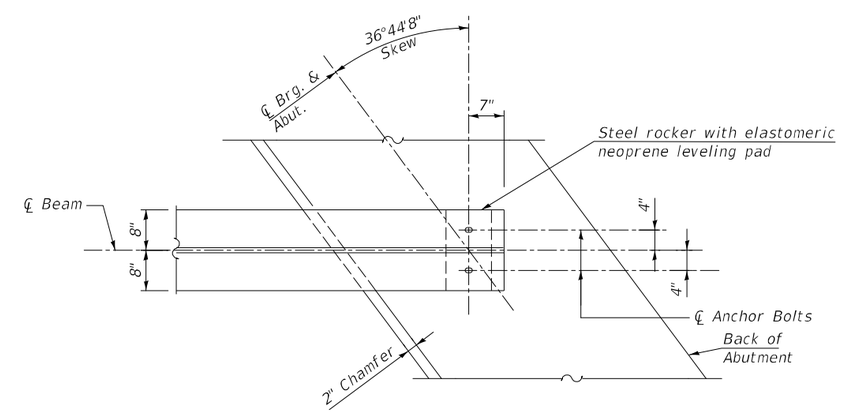

PLAN AT ABUTMENT

(Showing bottom flange of beam)

Notes:

1. Reinforcement bars in diaphragm are billed with superstructure on sheet S-14.
2. Concrete in diaphragm is included with Concrete Superstructure on sheet S-14.
3. For details of bars s100(E), s101(E) and v100(E) see sheet S-14.
4. The approach slab seat shall have a constant slope determined from the control points shown.
5. Steel rocker and fill plates included in the cost of Furnishing and Erecting Structural Steel.
6. The s100(E), s101(E) and v100(E) bars shall be placed parallel to beams. Spacing for these bars shall be at right angles to the beams.

MODEL: TSI_Plan
FILE NAME: G:\P220720 IDOT D1 PTB 204-001 Michigan City Rd. Bridge\03A Design\01 CADD\02 Sheets\Structures\Bridge\0162R62-016-Diaphragm.dgn

DELTA ENGINEERING GROUP, LLC
CONSULTING ENGINEERS, CONSTRUCTION MANAGERS, SURVEYORS
111 W JACKSON BLVD, SUITE 910
CHICAGO, IL 60604
T 312.377.7700, F 312.427.6145

USER NAME = $USER$	DESIGNED - RC	REVISED -	
	DRAWN - RM	REVISED -	
PLOT SCALE = $SCALE$	CHECKED - SMK	REVISED -	
PLOT DATE = 2/25/2025	DATE - 12/13/2024	REVISED -	

STATE OF ILLINOIS
DEPARTMENT OF TRANSPORTATION

DIAPHRAGM DETAILS
STRUCTURE NO. 016-8320

SCALE: | SHEET S-16 OF S-50 SHEETS | STA. | TO STA.

F.A.I. RTE.	SECTION	COUNTY	TOTAL SHEETS	SHEET NO.
94	FAI 94 22 Structure 2	COOK	157	85
		CONTRACT NO. 62R62		
	ILLINOIS	FED. AID PROJECT		

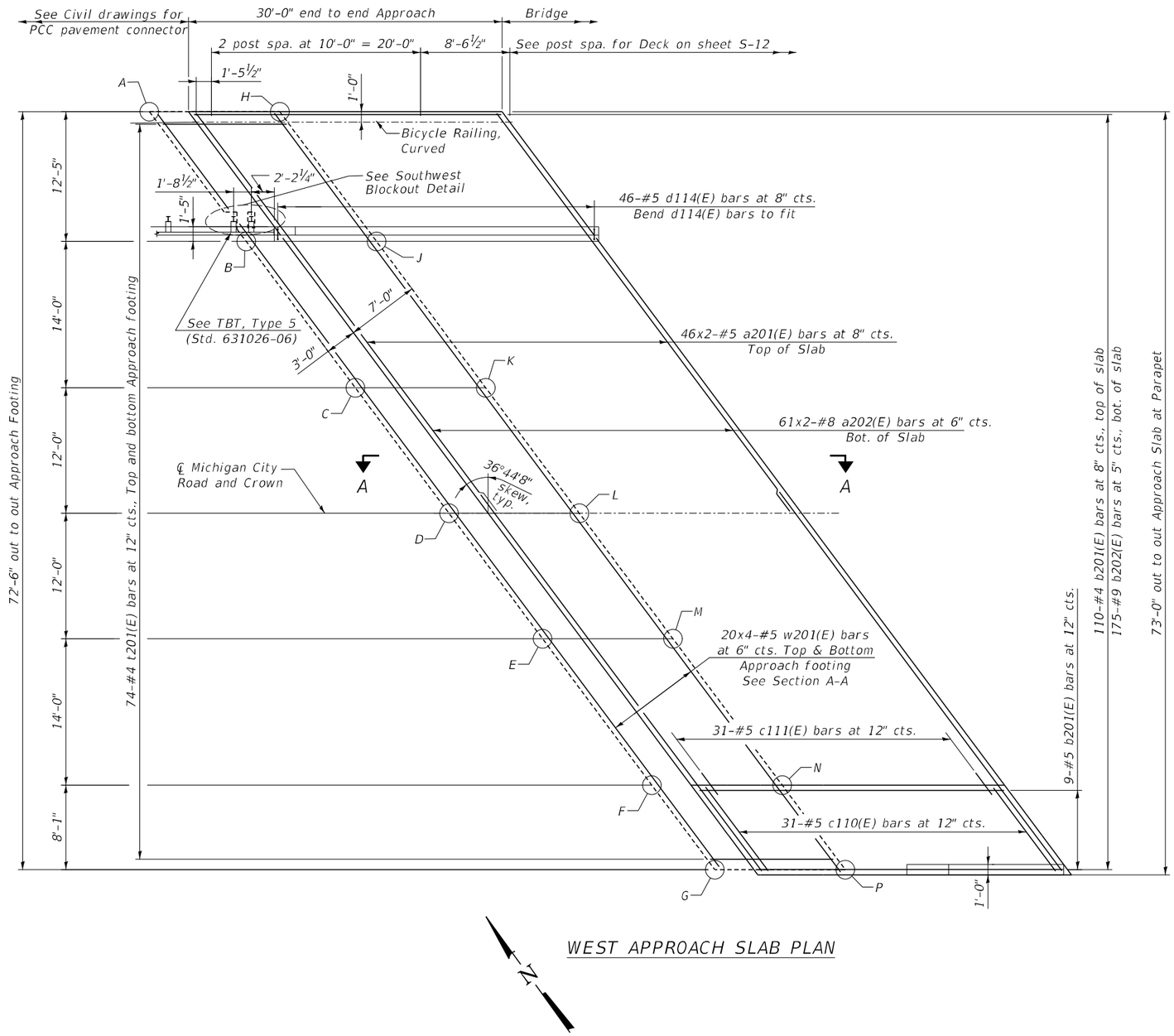

WEST APPROACH SLAB PLAN

MINIMUM BAR LAP

#4 = 2'-5"
#5 = 3'-6"
#8 = 4'-9"

TOP AND BOTTOM ELEVATIONS FOR APPROACH FOOTING

West Approach		
Point/ Location	Top	Bottom
A	613.06	612.23
B	613.12	612.29
C	613.66	612.83
D	614.05	613.22
E	614.07	613.24
F	614.00	613.17
G	614.25	613.42
H	613.39	612.56
J	613.43	612.60
K	613.95	613.12
L	614.32	613.49
M	614.32	613.49
N	614.23	613.40
P	614.46	613.63

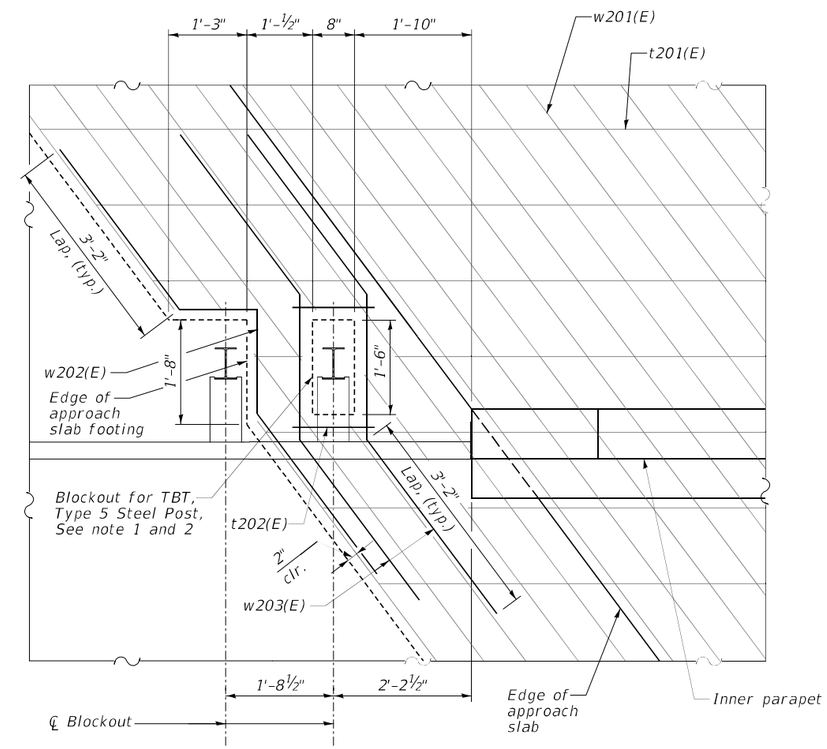

SOUTHWEST BLOCKOUT DETAIL

Notes:
1. Spacing and cutting the t201(E) and w201(E) reinforcing steel in field to clear off blockout.
2. Fill the blockout with CA-11 aggregate backfill. Cost included in Concrete Structures.

MODEL: TSL_Plan
FILE NAME: G:\P20720 IDOT D1 PTB 204-001 Michigan City Rd Bridge\03A Design\01 CADD\02 Sheets\Structures\Bridge\016R62-017-Appr_Slab1R_W.dgn

DELTA ENGINEERING GROUP, LLC
CONSULTING PROFESSIONAL CONSTRUCTION MANAGERS, ALL STAFF WORK
111 W JACKSON BLVD, SUITE 910
CHICAGO, IL 60604
T 312.377.7700, F 312.427.6145

USER NAME = $USER$	DESIGNED - RC	REVISED -	
	DRAWN - RM	REVISED -	
PLOT SCALE = $SCALE$	CHECKED - SMK	REVISED -	
PLOT DATE = 2/25/2025	DATE - 12/13/2024	REVISED -	

STATE OF ILLINOIS
DEPARTMENT OF TRANSPORTATION

WEST APPROACH SLAB PLAN
STRUCTURE NO. 016-8320

SCALE: | SHEET S-17 OF S-50 SHEETS | STA. | TO STA.

F.A.I. RTE.	SECTION	COUNTY	TOTAL SHEETS	SHEET NO.
94	FAI 94 22 Structure 2	COOK	157	86
		CONTRACT NO. 62R62		
		ILLINOIS	FED. AID PROJECT	

TOP AND BOTTOM ELEVATIONS FOR APPROACH FOOTING

East Approach		
Point/ Location	Top	Bottom
A	614.41	613.58
B	614.05	613.22
C	614.13	613.30
D	614.12	613.29
E	613.73	612.90
F	613.20	612.37
H	614.18	613.35
G	613.16	612.33
J	613.80	612.97
K	613.86	613.03
L	613.83	613.00
M	613.42	612.59
N	612.87	612.04
P	612.82	611.99

MINIMUM BAR LAP

#4 = 2'-5"
#5 = 3'-6"
#8 = 4'-9"

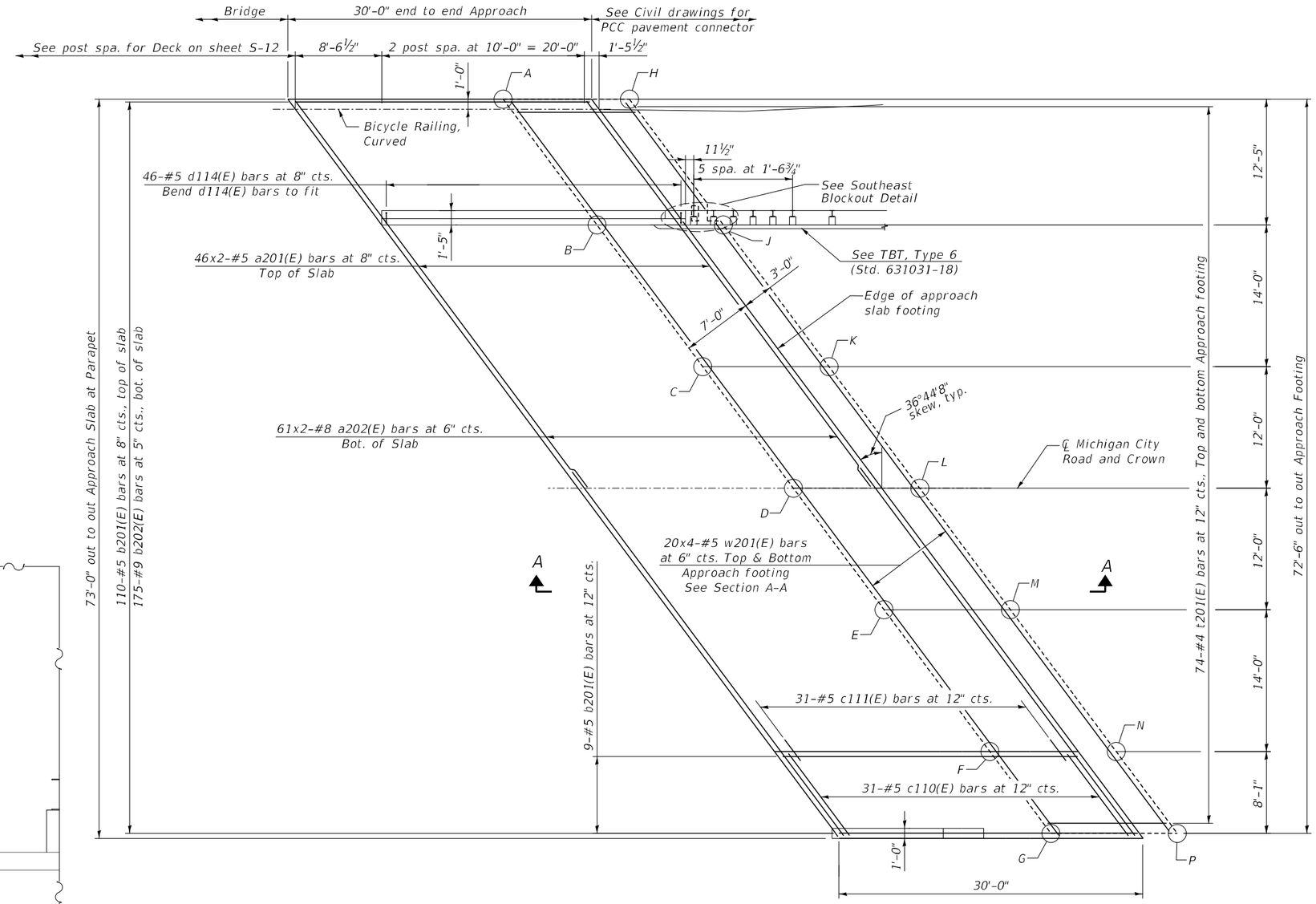

EAST APPROACH SLAB PLAN

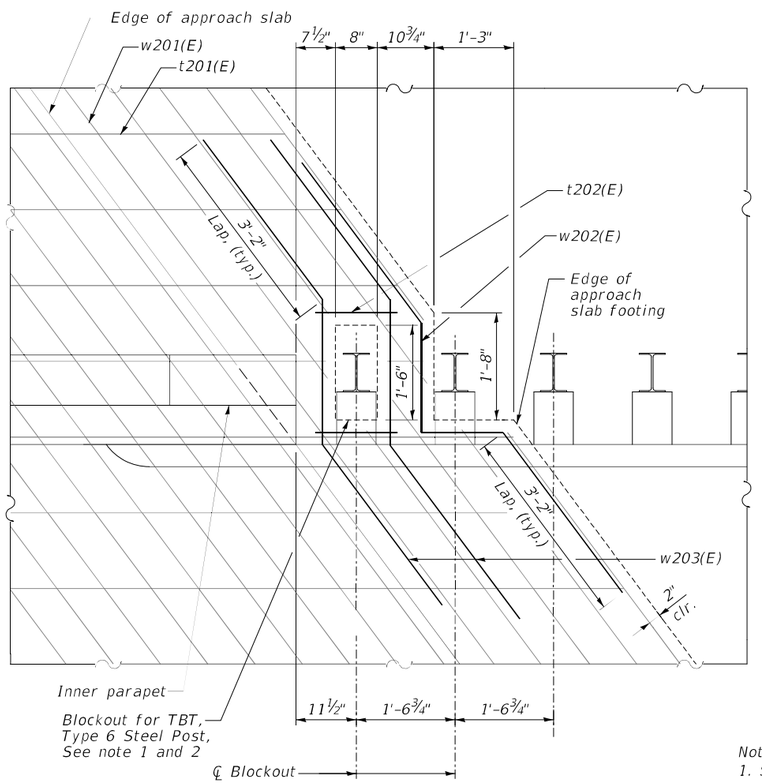

SOUTHEAST BLOCKOUT DETAIL

Notes:
1. Spacing and cutting the t201(E) and w201(E) reinforcing steel in field to clear off blockout.
2. Fill the blockout with CA-11 aggregate backfill. Cost included in Concrete Structures.

MODEL: TSL_Plan
FILE NAME: G:\P20720 IDOT D1 PTB 204-001 Michigan City Rd Bridge\03A Design\01 CADD\02 Sheet\Structures\Bridge\016R62-018-Appr_Slab\A-E.dgn

DELTA ENGINEERING GROUP, LLC
CONSULTING ENGINEERS, CONSTRUCTION MANAGERS, ALL STRUCTURES
111 W JACKSON BLVD, SUITE 910
CHICAGO, IL 60604
T 312.377.7700, F 312.427.6145

USER NAME = $USER$	DESIGNED - RC	REVISED -	
	DRAWN - RM	REVISED -	
PLOT SCALE = $SCALE$	CHECKED - SMK	REVISED -	
PLOT DATE = 2/25/2025	DATE - 12/13/2024	REVISED -	

STATE OF ILLINOIS
DEPARTMENT OF TRANSPORTATION

EAST APPROACH SLAB PLAN
STRUCTURE NO. 016-8320

SCALE: | SHEET S-18 OF S-50 SHEETS | STA. | TO STA.

F.A.I. RTE.	SECTION	COUNTY	TOTAL SHEETS	SHEET NO.
94	FAI 94 22 Structure 2	COOK	157	87
		CONTRACT NO. 62R62		
		ILLINOIS	FED. AID PROJECT	

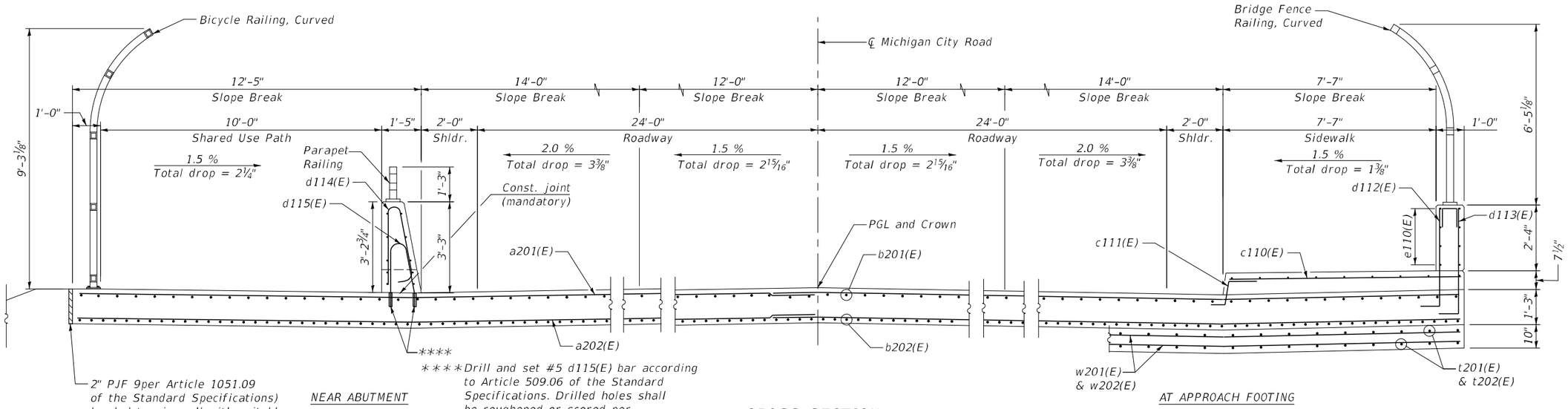

CROSS SECTION

(Looking East)

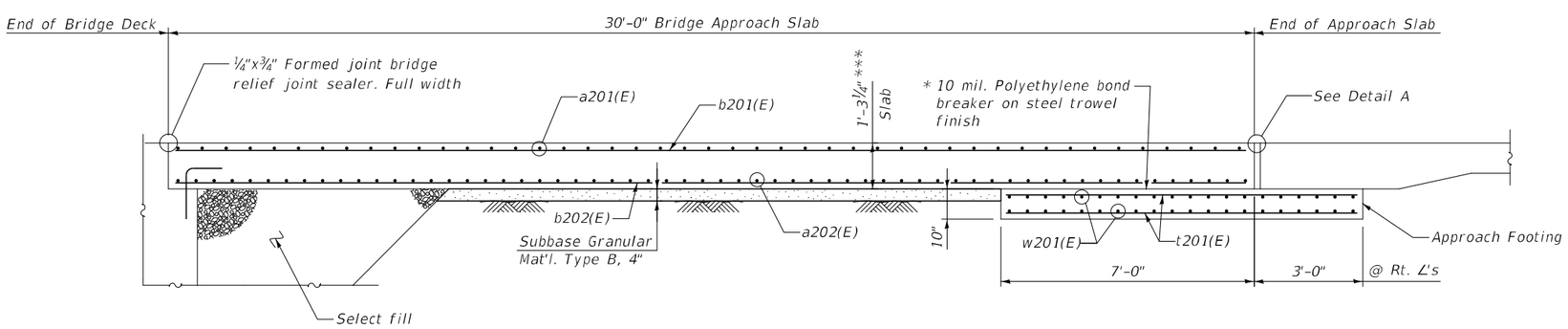

SECTION A-A

*** Prior to grinding

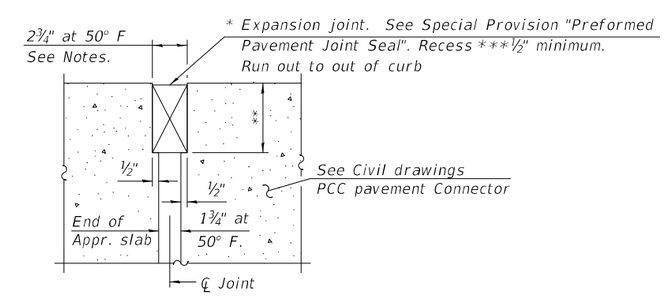

DETAIL A

* Cost included with Concrete Superstructure (Approach Slab).

** Per manufacturer recommendations

MODEL: TSL_Plan
FILE NAME: G:\P20270 IDOT D1 PTB 204-001 Michigan City Rd Bridge\03A Design\01 CADD\02 Sheets\Structures\Bridge\0162R62-019-Approach Slab Detail.dgn

DELTA ENGINEERING GROUP, LLC
CONSULTING ENGINEERS, CONSTRUCTION MANAGERS, SURVEYORS
111 W JACKSON BLVD, SUITE 910
CHICAGO, IL 60604
T 312.377.7700, F 312.427.6145

USER NAME = $USER$	DESIGNED - RC	REVISED -	
	DRAWN - RM	REVISED -	
PLOT SCALE = $SCALE$	CHECKED - SMK	REVISED -	
PLOT DATE = 2/25/2025	DATE - 12/13/2024	REVISED -	

STATE OF ILLINOIS
DEPARTMENT OF TRANSPORTATION

APPROACH SLAB DETAILS - 1
STRUCTURE NO. 016-8320

SCALE: | SHEET S-19 OF S-50 SHEETS | STA. | TO STA.

F.A.I. RTE.	SECTION	COUNTY	TOTAL SHEETS	SHEET NO.
94	FAI 94 22 Structure 2	COOK	157	88
		CONTRACT NO. 62R62		
		ILLINOIS	FED. AID PROJECT	

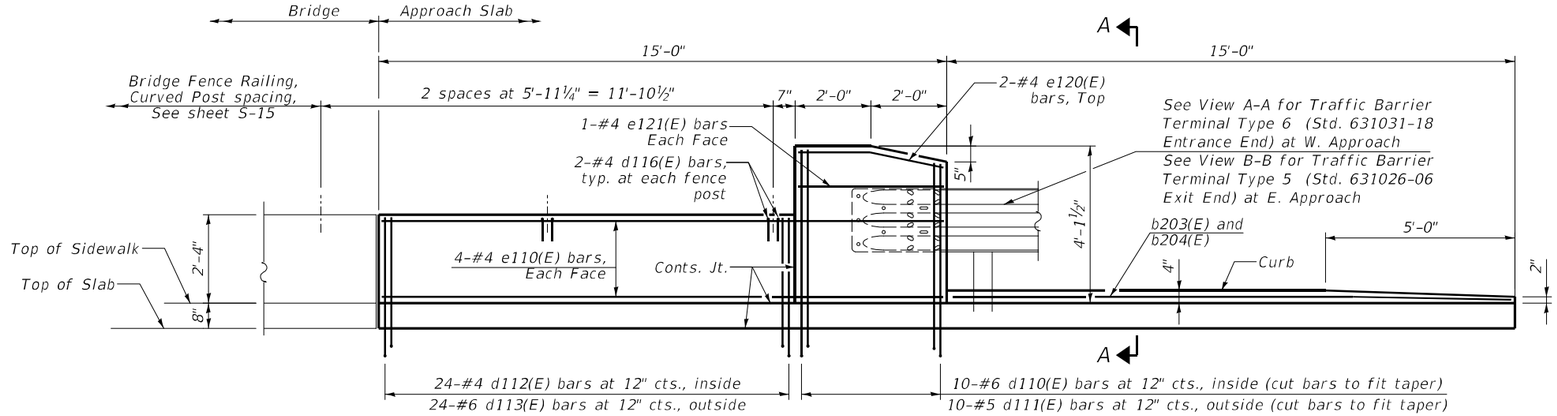

INSIDE ELEVATION - SOUTH PARAPET

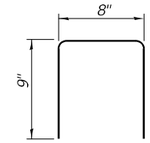

BAR d116(E)

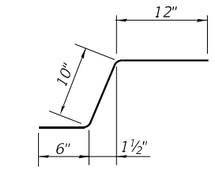

BAR c111(E)

TWO APPROACHES BILL OF MATERIAL

Bar	No.	Size	Length	Shape
a201(E)	192	#5	47'-1"	
a202(E)	244	#8	48'-3"	
b201(E)	238	#5	29'-8"	
b202(E)	350	#9	29'-8"	
c110(E)	62	#5	10'-4"	
c111(E)	62	#5	8'-0"	
d110(E)	20	#6	6'-7"	
d111(E)	20	#5	6'-5"	
d112(E)	48	#4	4'-8"	
d113(E)	48	#6	4'-6"	
d114(E)	184	#5	6'-4¼"	
d115(E)	184	#5	5'-2"	
d116(E)	48	#4	2'-2"	
e110(E)	80	#4	14'-8"	
e111(E)	16	#4	29'-8"	
e120(E)	8	#4	3'-9"	
e121(E)	8	#4	3'-8"	
t201(E)	244	#4	12'-1"	
t202(E)	16	#4	1'-4"	
w201(E)	320	#5	25'-1"	
w202(E)	8	#5	9'-5"	
w203(E)	8	#5	8'-6"	

Item	Unit	Quantity
Protective Coat	Sq. Yd.	562
Concrete Structures	Cu. Yd.	56.2
Concrete Superstructure	Cu. Yd.	26.8
Bridge Deck Grooving (Longitudinal)	Sq. Yd.	320
Concrete Superstructure (Approach Slab)	Cu. Yd.	202.8
Reinforcement Bars, Epoxy Coated	Pound	99,420
Diamond Grinding (Bridge Section)	Sq. Yd.	320

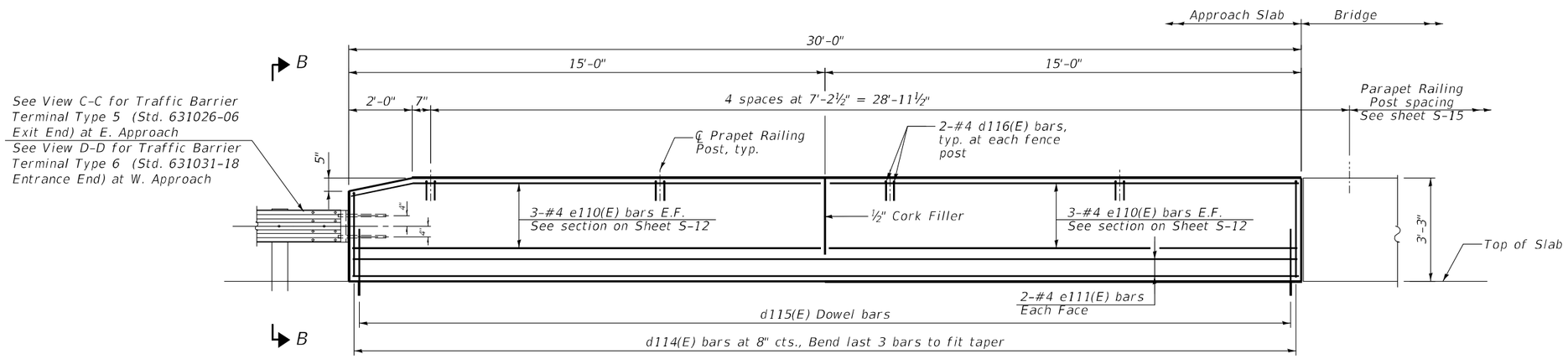

INSIDE ELEVATION - INNER PARAPET

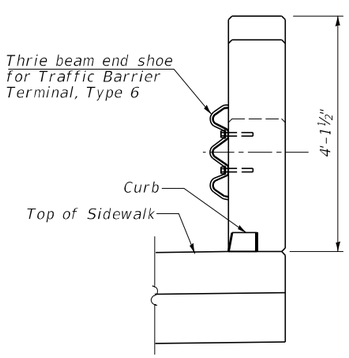

VIEW A-A

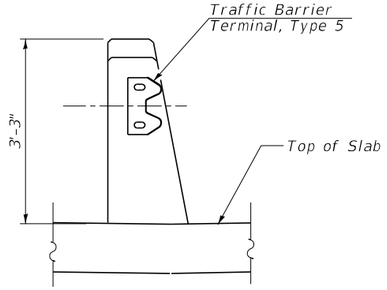

VIEW B-B

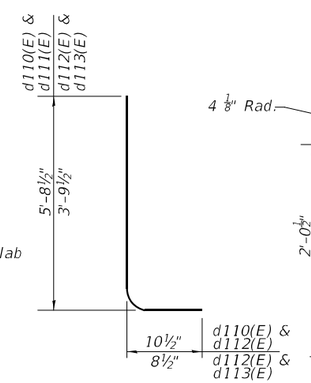

BARS d110(E), d111(E), d112(E) & d113(E),

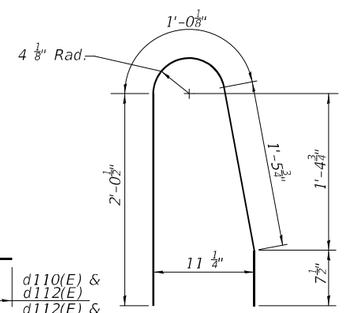

BAR d115(E)

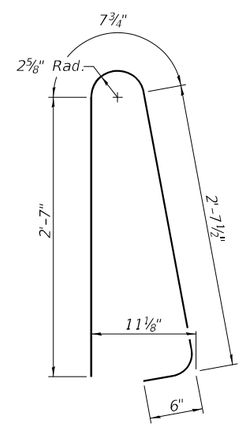

BAR d114(E)

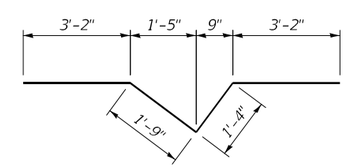

BAR w202(E)

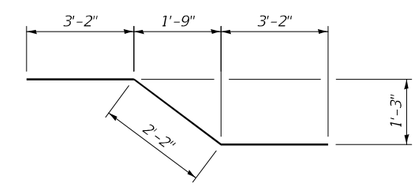

BAR w203(E)

Notes:

The joint opening shall be adjusted for temperature per Article 520.04 of the Standard Specifications. However, since this detail is for jointless structures, the length of bridge used to calculate the adjustment shall be equal to half the total bridge length plus the length of the bridge approach slab.

Parapet and sidewalk concrete shall be paid for as Concrete Superstructure.

Approach slab shall be paid for as Concrete Superstructure (Approach Slab).

Approach footing concrete shall be paid for as Concrete Structures.

The approach footing maximum applied service bearing pressure (Qmax) = 2.0 ksf.

Cost of excavation for approach footing included with Concrete Structures.

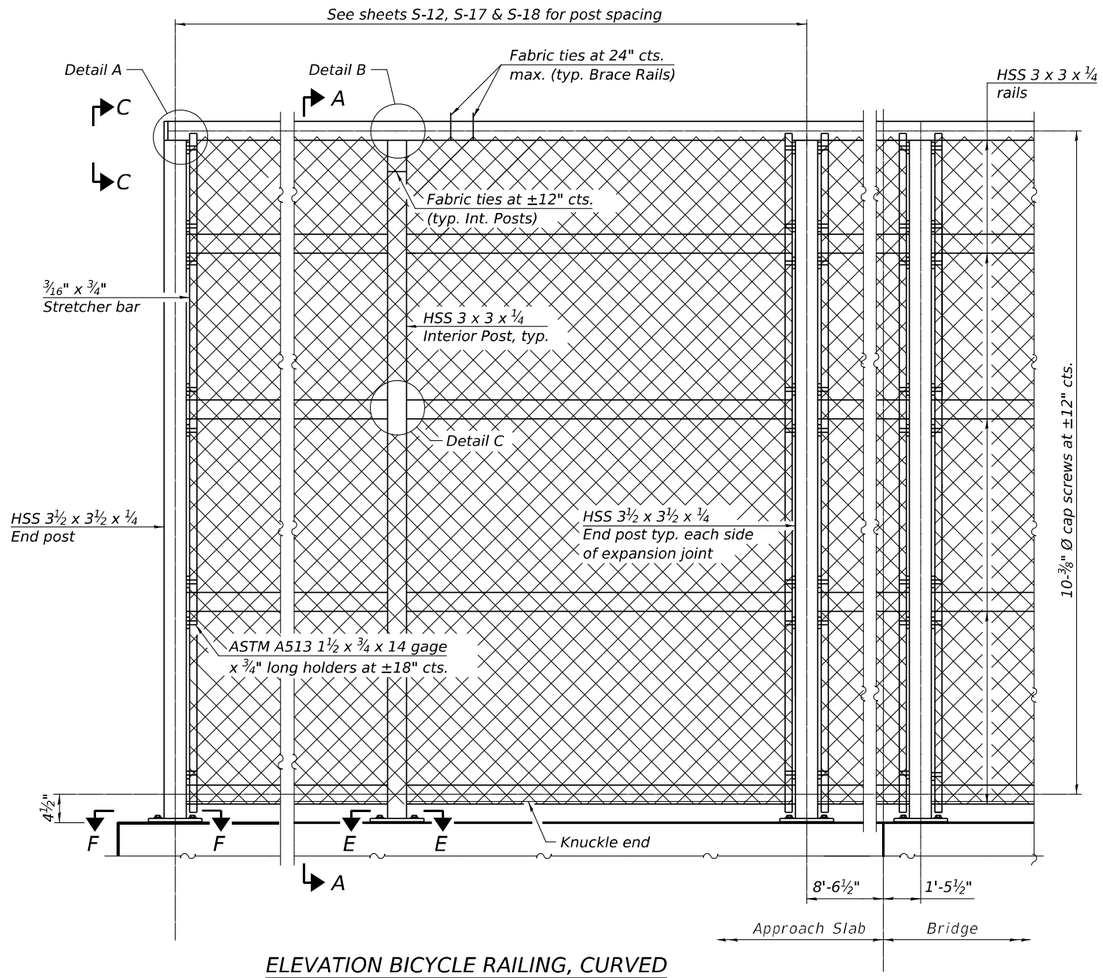

ELEVATION BICYCLE RAILING, CURVED

(Inside face)

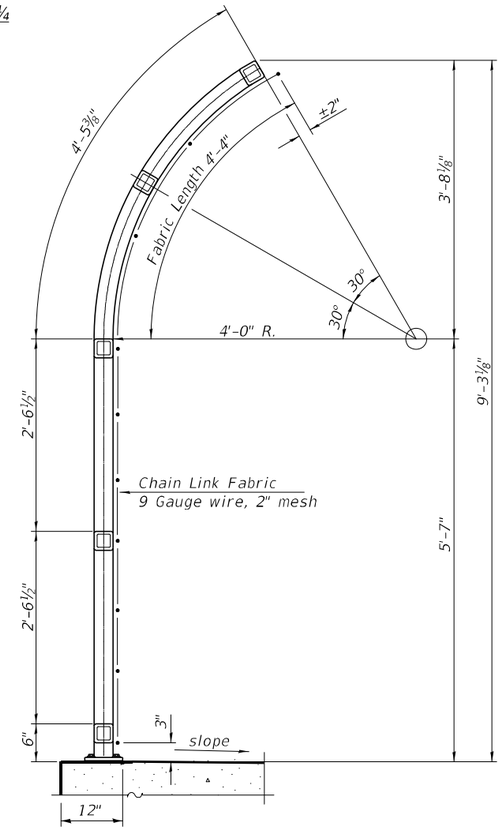

SECTION A-A

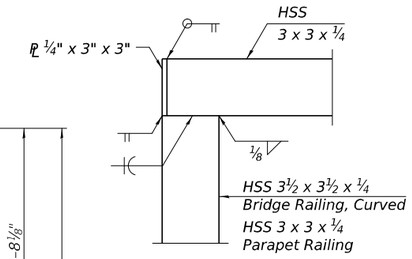

DETAIL A

(Parapet railing shown, bicycle railing similar)

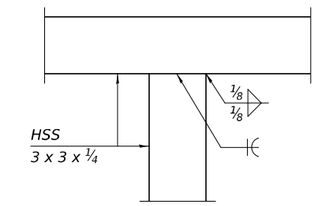

DETAIL B

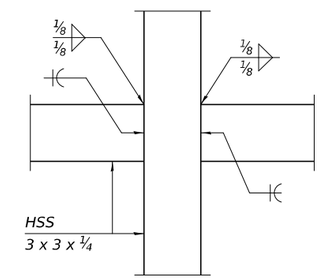

DETAIL C

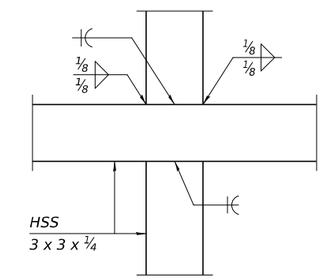

DETAIL D

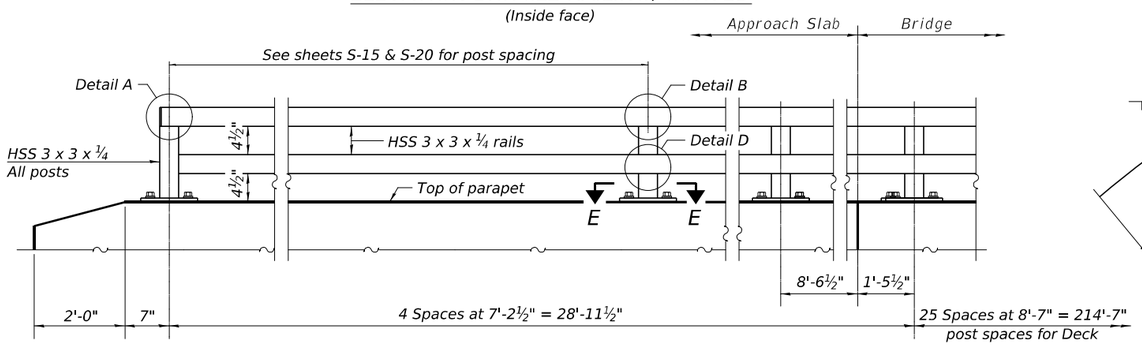

ELEVATION PARAPET RAILING

(Inside face)

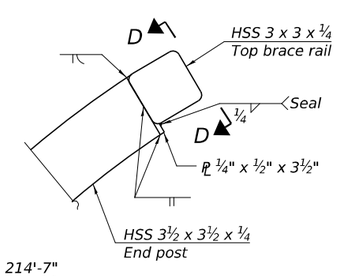

VIEW C-C

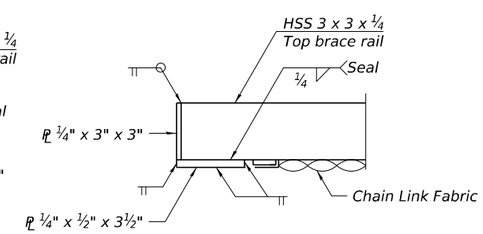

VIEW D-D

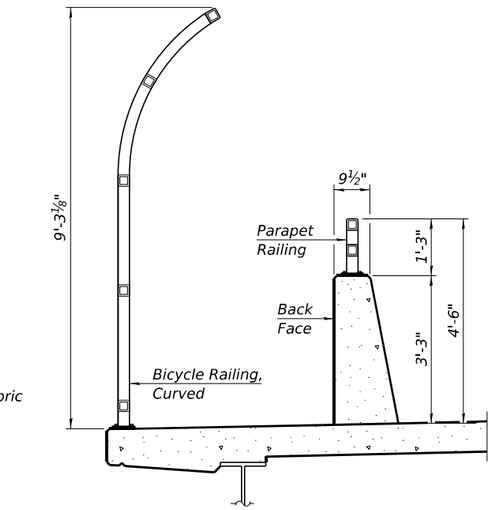

SECTION THRU DECK

RAILING CRITERIA

MASH 2016 Test Level	4
Parapet Railing Weight (plf)	25
Bicycle Railing Weight (plf)	50
Max Post Spacing	10'-0"

R-33

5-15-2023

MODEL: TSL_Plan
FILE NAME: C:\P220720 IDOT D1 PTB 204-001 Michigan City Rd Bridge\03A Design\01 CADD\02 Sheets\Structures\Bridge\016R62-021-Railing R-33 sheet.dgn

DELTA ENGINEERING GROUP, LLC
CONSULTING ENGINEERS, CONSTRUCTION MANAGERS, SURVEYORS
111 W JACKSON BLVD, SUITE 910
CHICAGO, IL 60604
T 312.377.7700, F 312.427.6145

USER NAME = $USER$	DESIGNED - RC	REVISED -	
	DRAWN - RM	REVISED -	
PLOT SCALE = $SCALE$	CHECKED - SMK	REVISED -	
PLOT DATE = 2/25/2025	DATE - 12/13/2024	REVISED -	

STATE OF ILLINOIS
DEPARTMENT OF TRANSPORTATION

BICYCLE RAILING, CURVED & PARAPET RAILING (1 of 2)
STRUCTURE NO. 016-8320

SCALE: | SHEET S-21 OF S-50 SHEETS | STA. | TO STA.

F.A.I. RTE.	SECTION	COUNTY	TOTAL SHEETS	SHEET NO.
94	FAI 94 22 Structure 2	COOK	157	90
		CONTRACT NO. 62R62		
		ILLINOIS	FED. AID PROJECT	

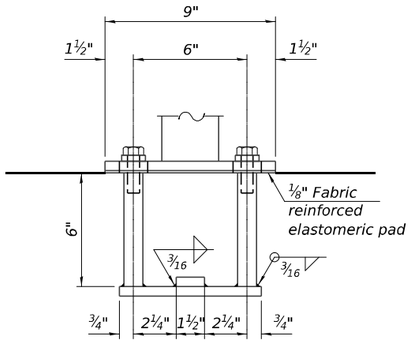

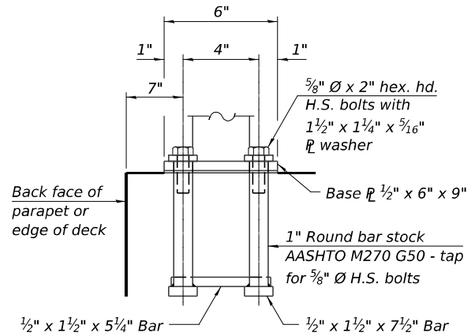

ANCHORAGE ASSEMBLY

The Bicycle Railing, Curved fasteners for end posts near expansion joints may need to be installed prior to installing the bent plates.

In lieu of the cast-in-place anchor device shown, the Contractor has the option of drilling and setting ⅝" Ø fully threaded anchor rods with the same plate washers as specified above and heavy hex lock nuts according to Article 509.06 of the Standard Specifications. Embedment shall be according to the manufacturer's specifications.

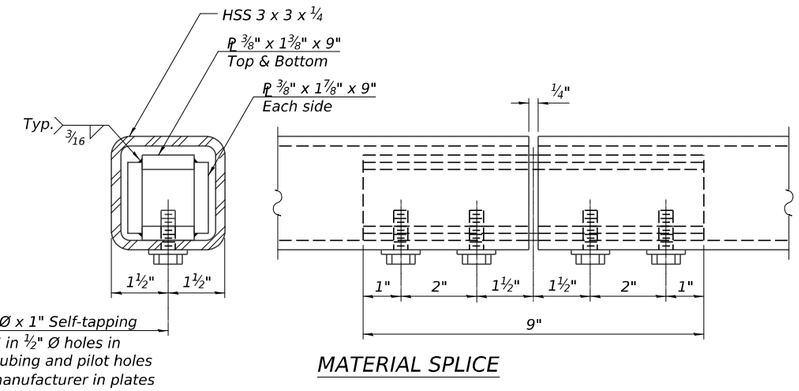

MATERIAL SPLICE

Notes:

Place reinforcement bars to miss anchor rod locations.

CVN testing is not required for the HSS tubing used in the Bicycle Railing, Curved.

All HSS tubing used for the Parapet Railing shall be CVN tested according to Article 1006.34(b) of the Standard Specifications.

All HSS tubing used for the Parapet Railing shall be ASTM A500 grade C.

All base plates used for the Parapet Railing shall be AASHTO M270 grade 50.

All heavy hex nuts shall be according to ASTM A 563 grade DH.

All fully threaded anchor rods shall be ASTM F1554 grade 105.

The post base plate shall be fastened to the curb snug tight and given an additional ⅛" turn.

Rail splice inserts may be built out of bent plates of the same thicknesses and outside geometry limits as the 4 plate rail splice inserts shown.

All steel rail elements shall be galvanized according to Article 509.05 of the Standard Specifications.

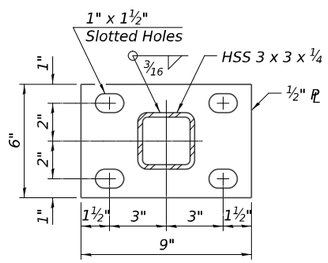

SECTION E-E

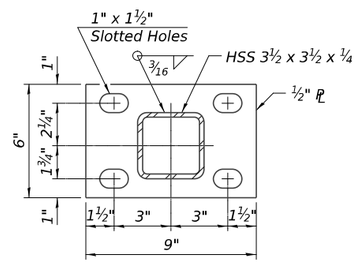

SECTION F-F

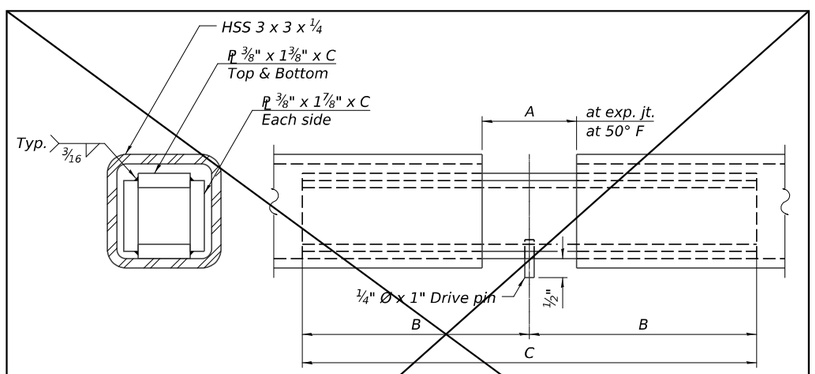

EXPANSION SPLICE

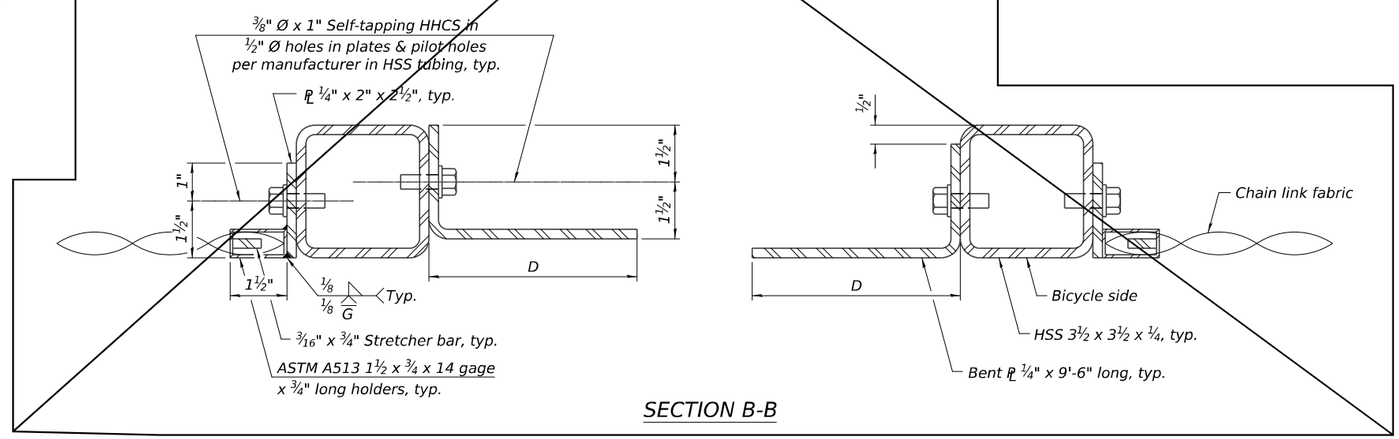

SECTION B-B

TABLE OF DIMENSIONS

Location	T	A	B	C	D	E
Over Strip Seal Jt.	≤4"	2½"	1'-2"	2'-4"	7¼"	7"
Over Finger or Modular Jt.	≤9½"	5½"	1'-7¾"	3'-3½"		
Over Finger or Modular Jt.	≤15"	8¼"	2'-1¼"	4'-2½"		

T= ; total movement based on total temperature range from -20°F to 120°F along centerline of roadway at expansion joint.

BILL OF MATERIAL

Item	Unit	Quantity
Bicycle Railing, Curved	Foot	247
Parapet Railing	Foot	240

R-33 5-15-2023

DELTA ENGINEERING GROUP, LLC
CONSULTING ENGINEERS, CONSTRUCTION MANAGERS, SURVEYORS
111 W JACKSON BLVD, SUITE 910
CHICAGO, IL 60604
T 312.377.7700, F 312.427.6145

USER NAME = rmamucod	DESIGNED - RC	REVISED -	
	DRAWN - RM	REVISED -	
PLOT SCALE = 2:0.0000 ':" / in.	CHECKED - SMK	REVISED -	
PLOT DATE = 12/13/2024	DATE - 12/13/2024	REVISED -	

STATE OF ILLINOIS
DEPARTMENT OF TRANSPORTATION

BICYCLE RAILING, CURVED & PARAPET RAILING (2 of 2)
STRUCTURE NO. 016-8320

SCALE: SHEET S-22 OF S-50 SHEETS STA. TO STA.

F.A.I. RTE.	SECTION	COUNTY	TOTAL SHEETS	SHEET NO.
94	FAI 94 22 Structure 2	COOK	157	91

CONTRACT NO. 62R62

ILLINOIS FED. AID PROJECT

MODEL: $MODEL$NAME
FILE NAME: G:\PZ20720 IDOT D1 PTB 204-001 Michigan City Rd Bridge\03A Design\01 CADD\02 Sheet\Structures\Bridge\016R62-022-Railing R-33.dgn

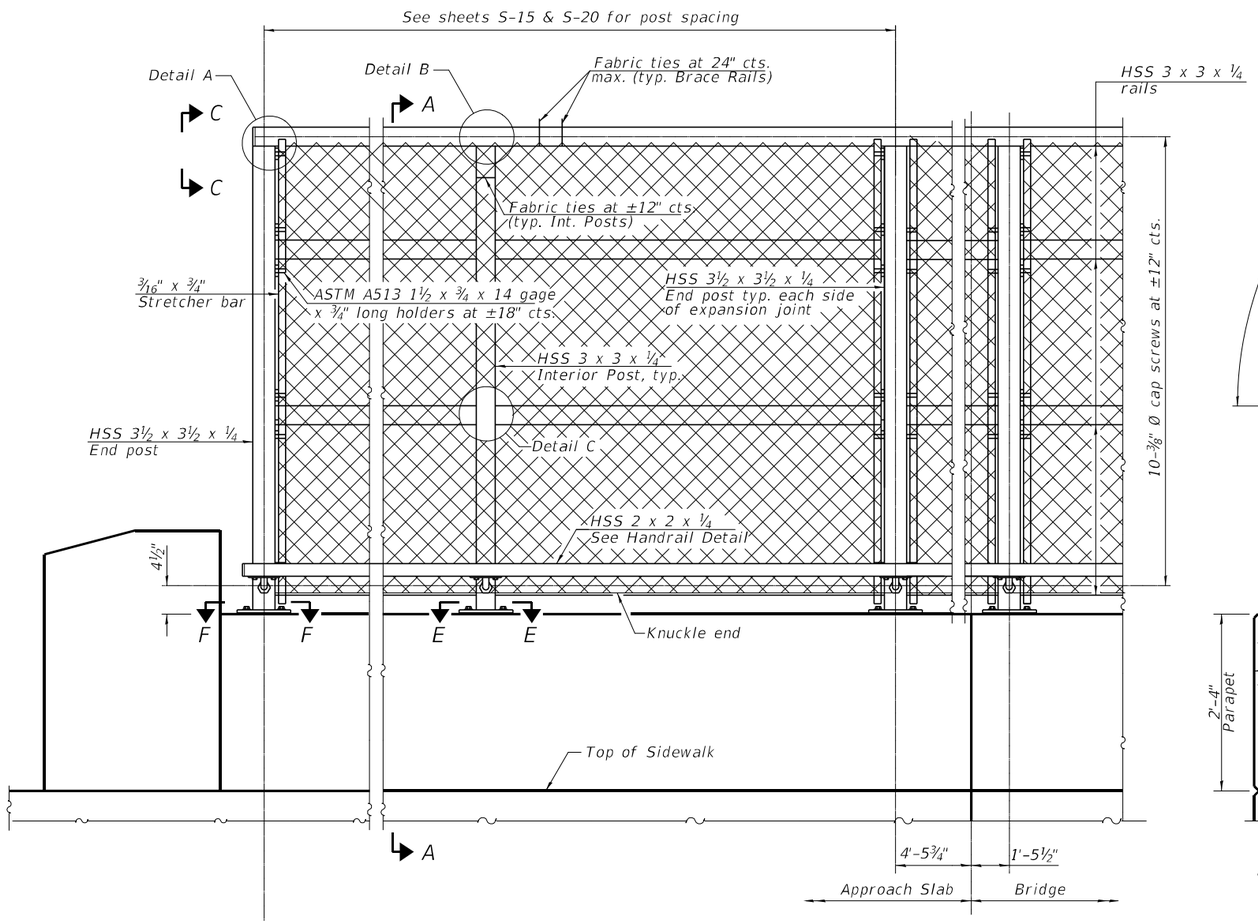

ELEVATION BRIDGE FENCE RAILING, CURVED

(Inside face)

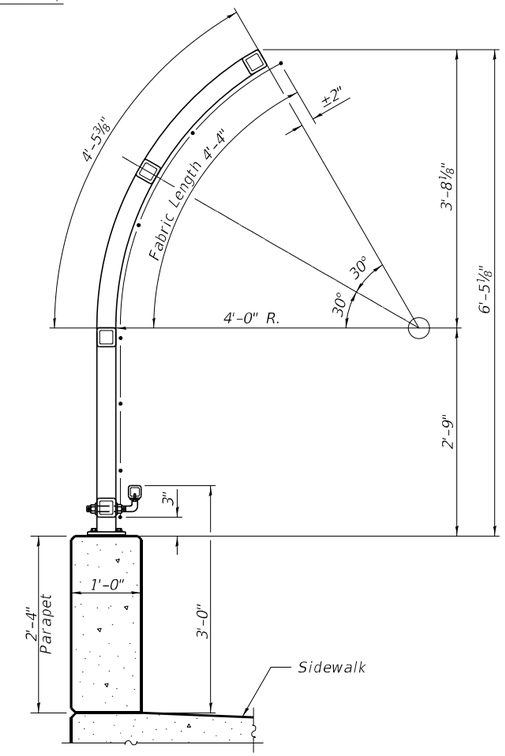

SECTION A-A

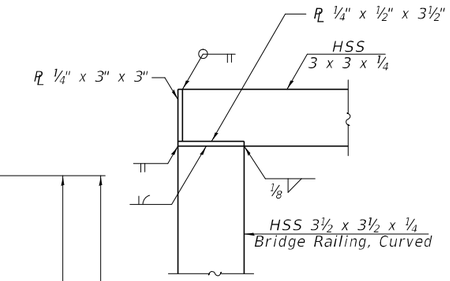

DETAIL A

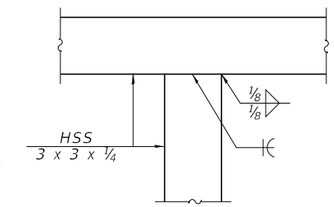

DETAIL B

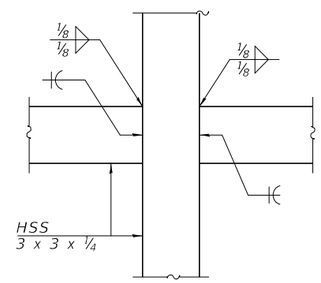

DETAIL C

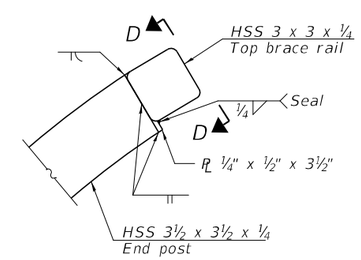

VIEW C-C

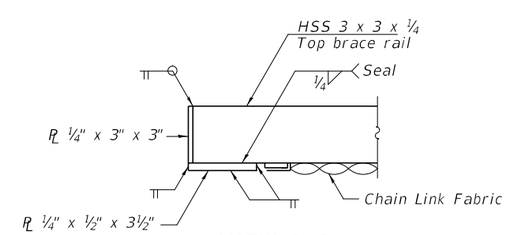

VIEW D-D

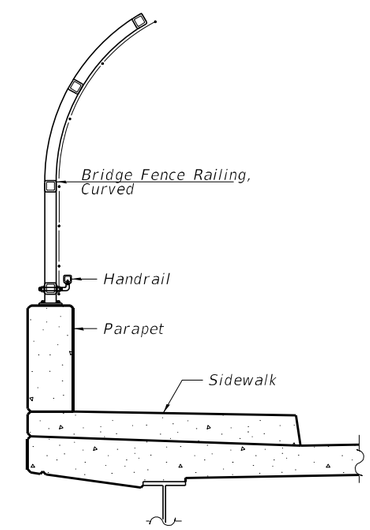

SECTION THRU DECK

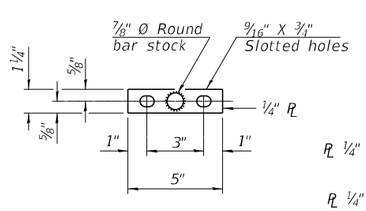

VIEW E-E

(Handrail)

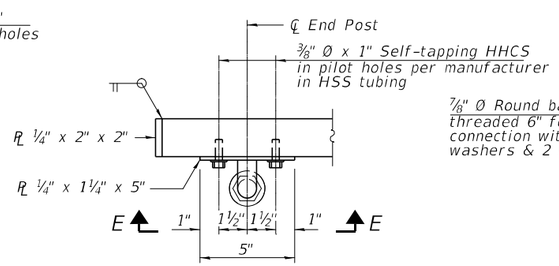

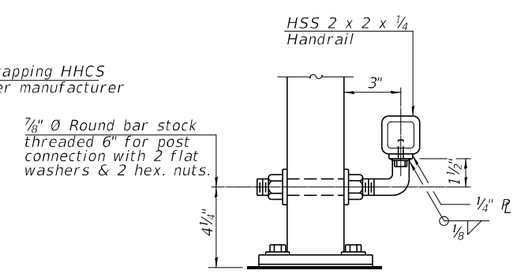

HANDRAIL DETAIL

RAILING CRITERIA

NCHRP 350 Test Level	4
Railing Weight (plf)	70
Max Post Spacing	10'-0"

R-32 5-15-2023

MODEL: TSL_Plan
FILE NAME: G:\P20720 IDOT D1 PTB 204-001 Michigan City Rd Bridge\03A Design\01 CADD\02 Sheets\Structures\Bridge\016R62-023-Railing R-32 det1.dgn

DELTA ENGINEERING GROUP, LLC
CONSULTING ENGINEERS, CONSTRUCTION MANAGERS, ALL STATE WORK
111 W JACKSON BLVD, SUITE 910
CHICAGO, IL 60604
T 312.377.7700, F 312.427.6145

USER NAME = $USER$	DESIGNED - RC	REVISED -	
	DRAWN - RM	REVISED -	
PLOT SCALE = $SCALE$	CHECKED - SMK	REVISED -	
PLOT DATE = 2/25/2025	DATE - 12/13/2024	REVISED -	

STATE OF ILLINOIS
DEPARTMENT OF TRANSPORTATION

BRIDGE FENCE RAILING, CURVED (1 of 2)
STRUCTURE NO. 016-8320

SCALE: | SHEET S-23 OF S-50 SHEETS | STA. | TO STA.

F.A.I. RTE.	SECTION	COUNTY	TOTAL SHEETS	SHEET NO.
94	FAI 94 22 Structure 2	COOK	157	92
		CONTRACT NO. 62R62		
		ILLINOIS	FED. AID PROJECT	

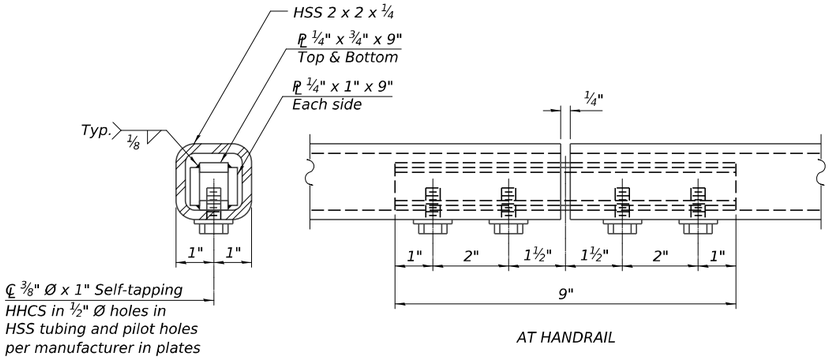

AT HANDRAIL

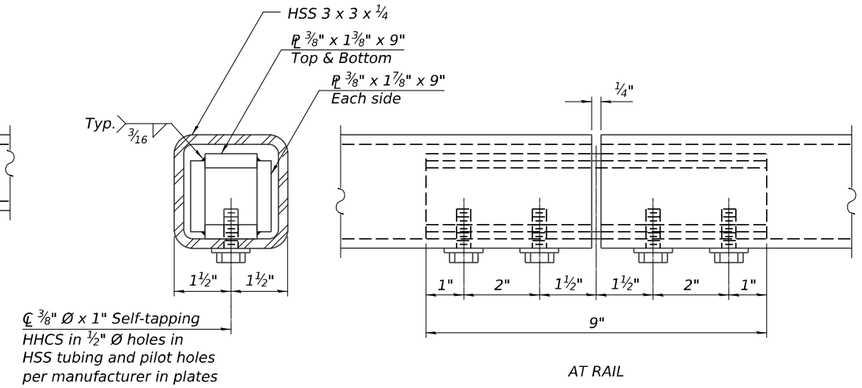

AT RAIL

MATERIAL SPLICE

Notes:

Place reinforcement bars to miss anchor rod locations.

CVN testing is not required for the HSS tubing used in the Bridge Fence Railing, Curved.

All HSS tubing used for the Handrail shall be CVN tested according to Article 1006.34(b) of the Standard Specifications.

All heavy hex nuts shall be according to ASTM A 563 grade DH.

All fully threaded anchor rods shall be ASTM F1554 grade 105.

The post base plate shall be fastened to the curb snug tight and given an additional ⅛" turn.

Rail splice inserts may be built out of bent plates of the same thicknesses and outside geometry limits as the 4 plate rail splice inserts shown.

All steel rail elements shall be galvanized according to Article 509.05 of the Standard Specifications.

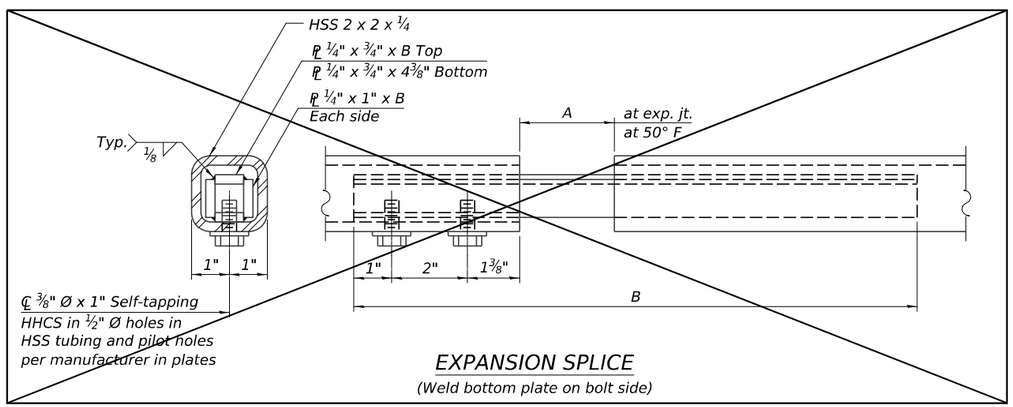

EXPANSION SPLICE

(Weld bottom plate on bolt side)

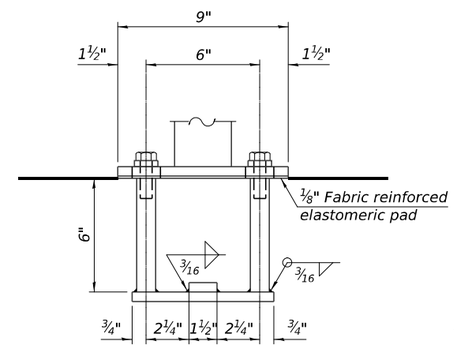

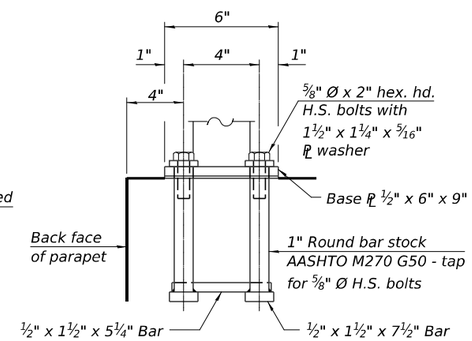

ANCHORAGE ASSEMBLY

The Bridge Fence Railing, Curved fasteners for end posts near expansion joints may need to be installed prior to installing the bent plates.

In lieu of the cast-in-place anchor device shown, the Contractor has the option of drilling and setting ⅝" Ø fully threaded anchor rods with the same plate washers as specified above and heavy hex lock nuts according to Article 509.06 of the Standard Specifications. Embedment shall be according to the manufacturer's specifications.

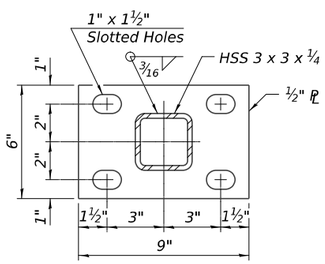

SECTION F-F

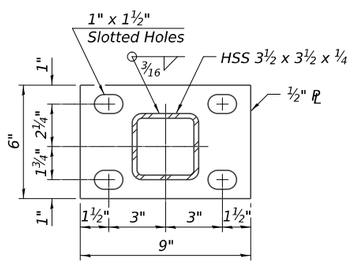

SECTION G-G

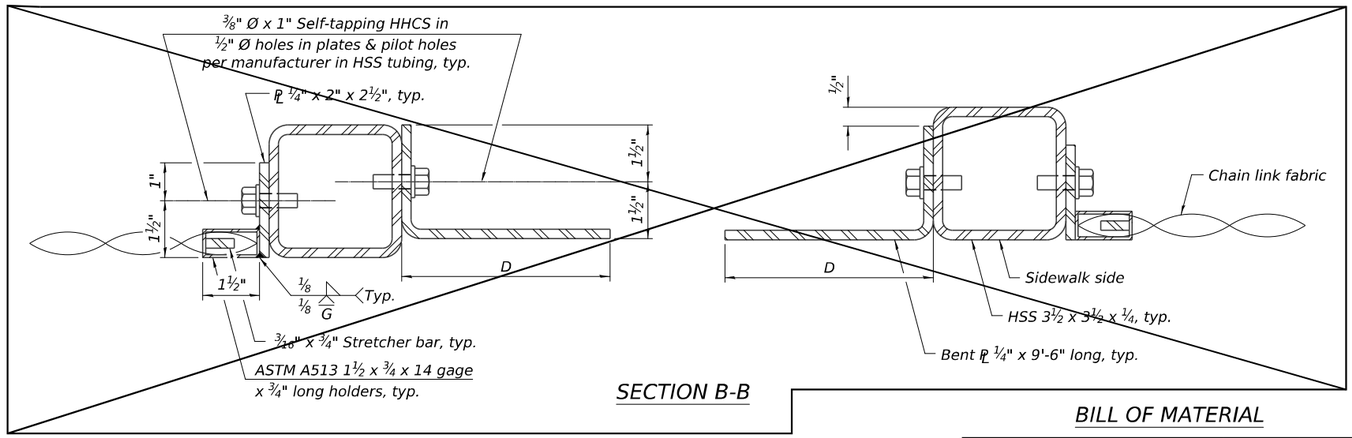

SECTION B-B

Location	T	A	B	C	D
Over Strip Seal Jt.	≤4"	2½"	1'-5⅞"	7¼"	7"
Over Finger or Modular Jt.	≤9½"	5½"	1'-11⅝"		
Over Finger or Modular Jt.	≤15"	8¼"	2'-5⅛"		

T= ; total movement based on total temperature range from -20°F to 120°F along centerline of roadway at expansion joint.

BILL OF MATERIAL

Item	Unit	Quantity
Bridge Fence Railing, Curved	Foot	487

R-32 5-15-2023

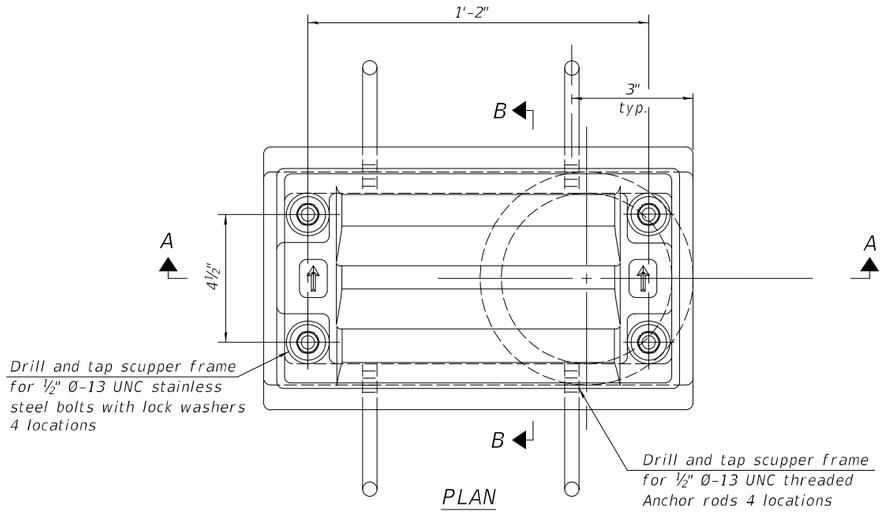

PLAN

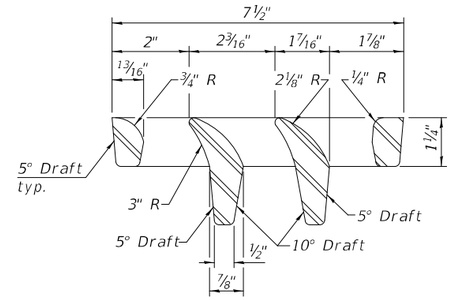

VANE GRATE DETAIL

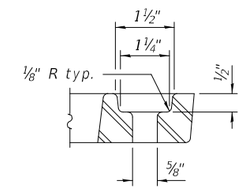

GRATE BOLT HOLE DETAIL

Notes:

All cast iron parts shall be gray iron conforming to the requirements of AASHTO M105, Class 35B and AASHTO M306.

Bolts, anchor rods, nuts and washers shall be according to ASTM A307 and shall be galvanized according to AASHTO M232. As an alternate stainless steel may be used.

Stainless steel hardware shall be according to Article 1006.29(d) of the Standard Specifications.

Structural steel weldments of equal sections and of the same configuration may be substituted for the cast iron scupper frames and downspouts; however, the scupper grates shall remain cast iron. Fillet or full penetration welds shall be used for the weldments. Details shall be submitted to the Engineer for approval.

Structural steel scupper frames and downspouts, when utilized, shall be galvanized according to AASHTO M111.

As an alternate, fiberglass may be used for downspouts according to ASTM D2996 with a short-time rupture strength hoop tensile stress of 30,000 psi min. in lieu of the cast iron or structural steel.

Exterior surfaces of downspouts and exterior exposed surfaces of the scupper frame below deck shall be pigmented or painted to match the color of the adjacent beam.

The Contractor shall take appropriate measures to assure that Protective Coat is not applied to the scupper.

Cost of the grate, frame, downspout, anchor rods, nuts and washers including complete installation of the scupper shall be paid for at the contract unit price for Drainage Scupper, DS-11.

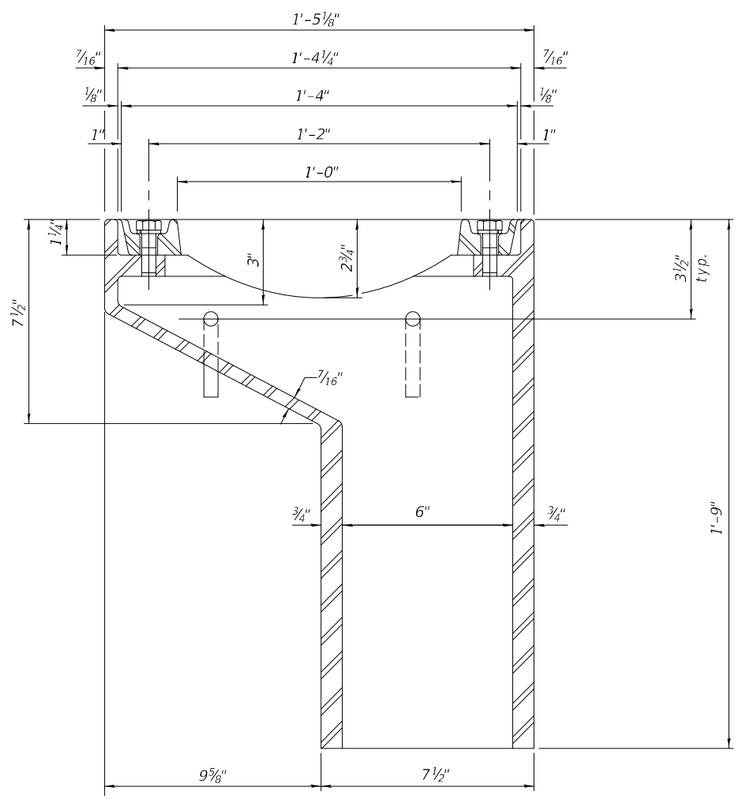

SECTION A-A

See sheet S-13 for scupper location relative to parapet.

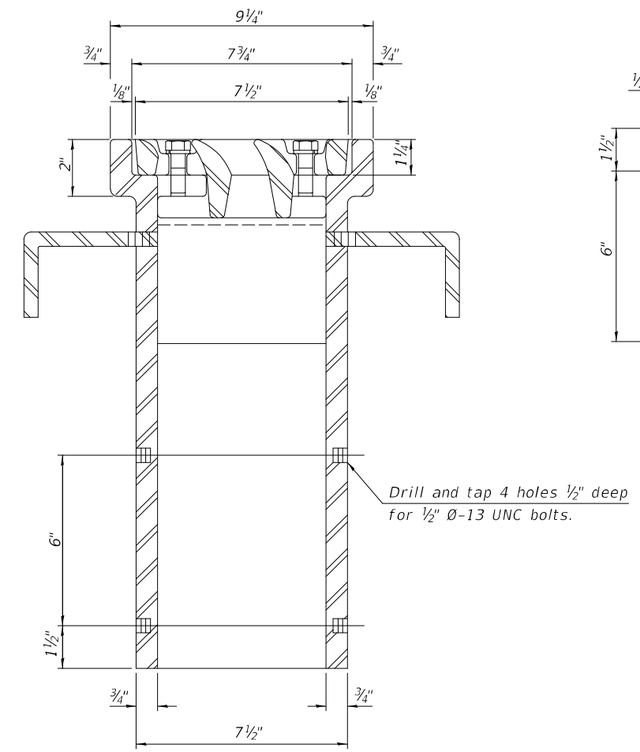

SECTION B-B

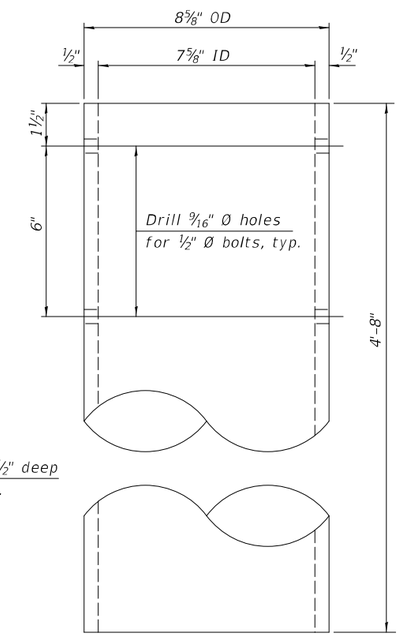

DOWNSPOUT

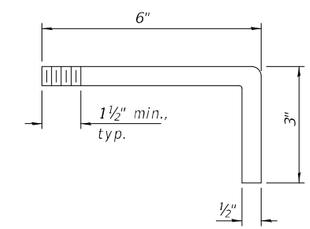

ANCHOR ROD DETAIL

BILL OF MATERIAL

ITEM	UNIT	QUANTITY
Drainage Scuppers, DS-11	Each	4

DS-11 5-15-2023

DELTA ENGINEERING GROUP, LLC
CONSULTING ENGINEERS, CONSTRUCTION MANAGERS, SURVEYORS
111 W JACKSON BLVD, SUITE 910
CHICAGO, IL 60604
T 312.377.7700, F 312.427.6145

USER NAME = $USER$	DESIGNED - RC	REVISED -
	DRAWN - RM	REVISED -
PLOT SCALE = $SCALE$	CHECKED - SMK	REVISED -
PLOT DATE = 2/25/2025	DATE - 12/13/2024	REVISED -

STATE OF ILLINOIS
DEPARTMENT OF TRANSPORTATION

DRAINAGE SCUPPERS, DS-11
STRUCTURE NO. 016-8320

SCALE: SHEET S-25 OF S-50 SHEETS STA. TO STA.

F.A.I. RTE.	SECTION	COUNTY	TOTAL SHEETS	SHEET NO.
94	FAI 94 22 Structure 2	COOK	157	94

CONTRACT NO. 62R62

ILLINOIS FED. AID PROJECT

MODEL: TSI_Plan
FILE NAME: G:\P220720 IDOT D1 PTB 204-001 Michigan City Rd Bridge\03A Design\01 CADD\02 Sheets\Structures\Bridge\0162R67-025-Drainage Det.dgn

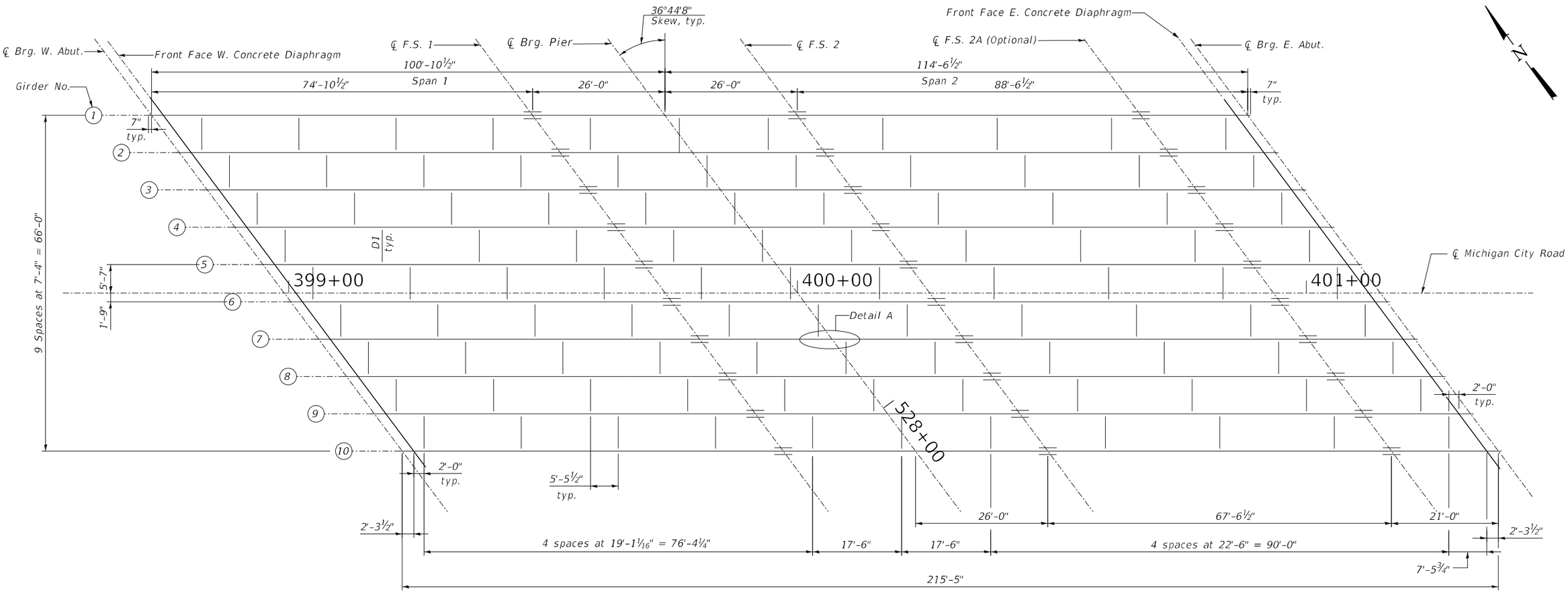

FRAMING PLAN

Notes:

1. All diaphragms between girders shall be installed with erection pins and bolts in accordance with the erection plan approved by the Engineer. Individual diaphragms at supports may be temporarily disconnected to install bearing anchor bolts.
2. Diaphragm spacing measured to back face of channel.
3. All interior diaphragms are to be D1 diaphragms.

MODEL: TSL_Plan
FILE NAME: G:\P220220 IDOT D1 PTB 204-001 Michigan City Rd Bridge\03A Design\01 CADD\02 Sheets\Structures\Bridge\0162R62-026-Framing1k.dgn

DELTA ENGINEERING GROUP, LLC
CONSULTING ENGINEERS, CONSTRUCTION MANAGERS, SURVEYORS
111 W JACKSON BLVD, SUITE 910
CHICAGO, IL 60604
T 312.377.7700, F 312.427.6145

USER NAME = $USER$	DESIGNED - RC	REVISED -	
	DRAWN - RM	REVISED -	
PLOT SCALE = $SCALE$	CHECKED - SMK	REVISED -	
PLOT DATE = 2/25/2025	DATE - 12/13/2024	REVISED -	

STATE OF ILLINOIS
DEPARTMENT OF TRANSPORTATION

FRAMING PLAN
STRUCTURE NO. 016-8320

SCALE: | SHEET S-26 OF S-50 SHEETS | STA. | TO STA.

F.A.I. RTE.	SECTION	COUNTY	TOTAL SHEETS	SHEET NO.
94	FAI 94 22 Structure 2	COOK	157	95
		CONTRACT NO. 62R62		
		ILLINOIS	FED. AID PROJECT	

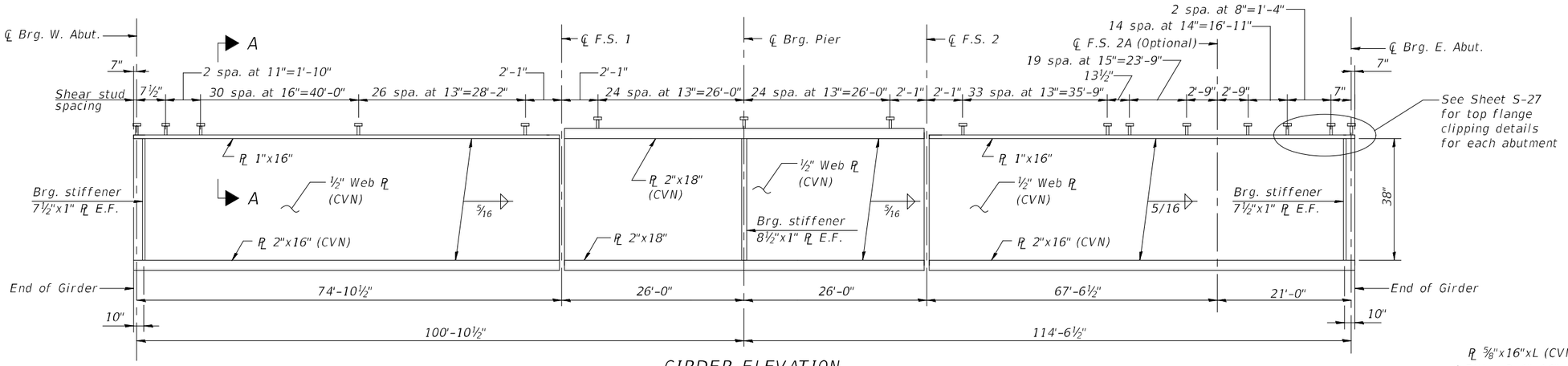

GIRDER ELEVATION

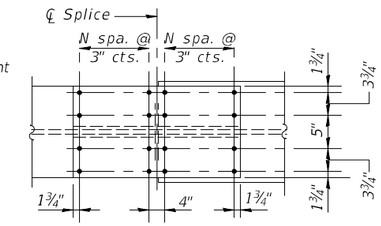

TOP FLANGE SPLICE

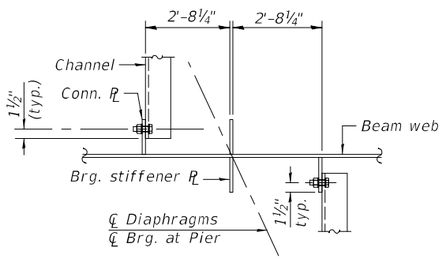

DETAIL A

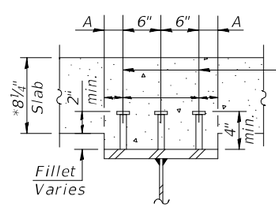

A = 2" for 16" flange
3" for 18" flange

¾" Ø Granular or solid flux filled headed studs automatically end welded to flange. (No. Req'd.= 5430)

SECTION A-A

*Prior to grinding

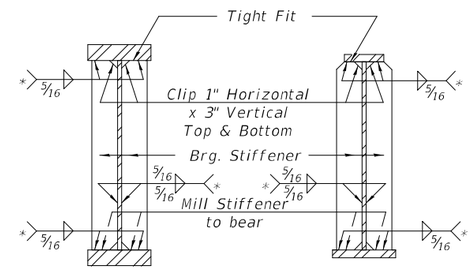

SECTION AT PIER

SECTION AT ABUTMENT

* Terminate ¼" (±⅛") from the end of plate intersects.

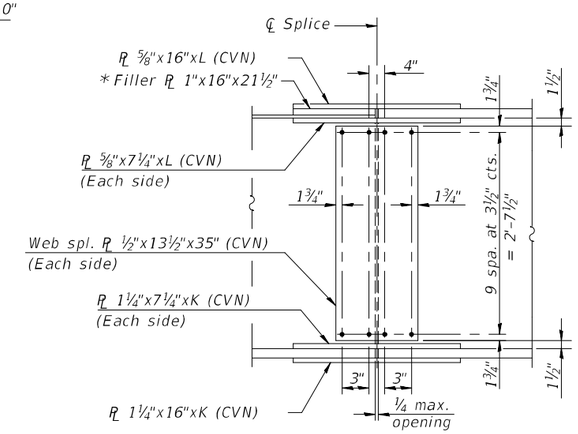

WEB PLATES

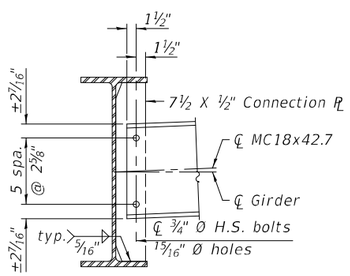

INTERIOR DIAPHRAGM

(D1 Diaphragm)

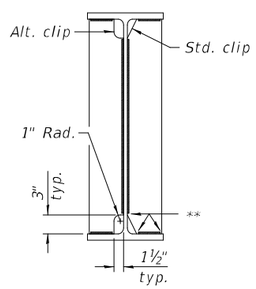

WELD LIMITS AND CLIP DETAILS

** Stop welds ¼" (±⅛") from edges as shown. Typical.

No. of D1 Diaphragm Req'd. = 99

TOP OF WEB ELEVATIONS

(FOR FABRICATION ONLY)

Girder	℄ Brg. W. Abut.	℄ Field Splice 1	℄ Brg. Pier	℄ Field Splice 2	℄ Brg. E. Abut.
1	614.33	615.36	615.52	615.67	615.08
2	614.33	615.29	615.43	615.56	614.89
3	614.53	615.43	615.54	615.65	614.90
4	614.78	615.61	615.70	615.78	614.96
5	614.99	615.75	615.82	615.88	614.98
6	615.15	615.84	615.88	615.92	614.93
7	615.13	615.75	615.77	615.78	614.72
8	615.08	615.63	615.63	615.62	614.48
9	615.01	615.50	615.47	615.44	614.22
10	615.12	615.54	615.49	615.43	614.13

FIELD SPLICE DIMENSION TABLE

	N	M	L	K
Field Splice #1	6	7	43½"	49½"
Field Splice #2	6	7	43½"	49½"
Field Splice #2A Optional	9	9	61½"	61½"

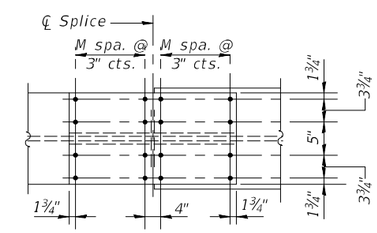

BOTTOM FLANGE SPLICE

FIELD SPLICE

Splice #1 as shown
Splice #2 Symmetrical to as shown
* Splice #2A optional same as shown except no filler plate (Splicing Flanges have same width and thickness)
For dimension N, M, L & K, See field splice dimension table
30 Field Splices Required Total

INTERIOR DIAPHRAGM CONNECTION DETAILS

Two hardened washers required for each set of oversized holes. Alternate channels of equal depth and larger weight are permitted to facilitate material acquisition. Alternate channels, if utilized, shall be provided at no additional cost to the Department. See Detail A for connection plate orientation.

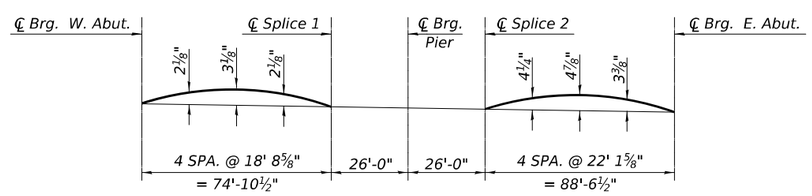

CAMBER DIAGRAM

Notes:
1. All structural steel for girders, bearing stifffener plates, and splice plates except fill plates shall be AASHTO M270 Grade 50.
2. Load carrying components designated "CVN" denotes Charpy-V-Notch impact energy requirements, zone 2.

MODEL: TSI_Plan
FILE NAME: G:\P20720 IDOT D1 PTB 204-001 Michigan City Rd Bridge\03A Design\01 CADD\07 Sheet\Structures\Bridge\016R62-027-GirderDet.dgn

DELTA ENGINEERING GROUP, LLC
CONSULTING ENGINEERS, CONSTRUCTION MANAGERS, ACCESS EXPERTS
111 W JACKSON BLVD, SUITE 910
CHICAGO, IL 60604
T 312.377.7700, F 312.427.6145

USER NAME = $USER$	DESIGNED - RC	REVISED -	
	DRAWN - RM	REVISED -	
PLOT SCALE = $$SCALE$	CHECKED - SMK	REVISED -	
PLOT DATE = 2/25/2025	DATE - 12/13/2024	REVISED -	

STATE OF ILLINOIS
DEPARTMENT OF TRANSPORTATION

GIRDER ELEVATION AND DETAILS
STRUCTURE NO. 016-8320

SCALE: | SHEET S-27 OF S-50 SHEETS | STA. | TO STA.

F.A.I. RTE.	SECTION	COUNTY	TOTAL SHEETS	SHEET NO.
94	FAI 94 22 Structure 2	COOK	157	96
		CONTRACT NO. 62R62		
		ILLINOIS	FED. AID PROJECT	

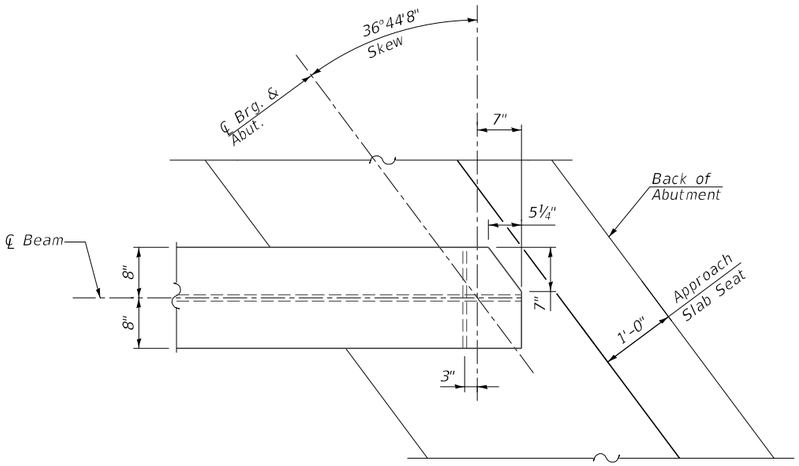

TOP FLANGE PLAN - CLIPPED

(E. Abut. shown W. Abut. similar)

I_s, S_s : Non-composite moment of inertia and section modulus of the steel section used for computing f_s(Total-Strength I, and Service II) due to non-composite dead loads (in.^{4} and in.^{3}).

$I_c(n)$, $S_c(n)$: Composite moment of inertia and section modulus of the steel and deck based upon the modular ratio, "n", used for computing f_s(Total-Strength I, and Service II) in uncracked sections due to short-term composite live loads (in.^{4} and in.^{3}).

$I_c(3n)$, $S_c(3n)$: Composite moment of inertia and section modulus of the steel and deck based upon 3 times the modular ratio, "3n", used for computing f_s(Total-Strength I, and Service II) in uncracked sections, due to long-term composite (superimposed) dead loads (in.^{4} and in.^{3}).

$I_c(cr)$, $S_c(cr)$: Composite moment of inertia and section modulus of the steel and longitudinal deck reinforcement, used for computing f_s (Total-Strength I and Service II) in cracked sections, due to both short-term composite live loads and long-term composite (superimposed) dead loads (in.^{4} and in.^{3}).

S_x : Section modulus about the major axis of a section to the controlling flange, tension or compression, taken as yield moment with respect to the controlling flange over the yield strength of the controlling flange (in.^{3}). See Design Guide 3.3.4 on the primary Bridges and Structures Page.

DC1: Un-factored non-composite dead load (kips/ft.).

M_{DC1} : Un-factored moment due to non-composite dead load (kip-ft.).

DC2: Un-factored long-term composite (superimposed excluding future wearing surface) dead load (kips/ft.).

M_{DC2} : Un-factored moment due to long-term composite (superimposed excluding future wearing surface) dead load (kip-ft.).

DW: Un-factored long-term composite (superimposed future wearing surface only) dead load (kips/ft.).

M_{DW} : Un-factored moment due to long-term composite (superimposed future wearing surface only) dead load (kip-ft.).

LLDF: Live Load Distribution Factor for moment and shear computed according to Article 4.6.2.2 and further IDOT provisions.

M_{LL+IM} : Un-factored live load moment plus dynamic load allowance (impact) (kip-ft.).

M_u : Strength I load combination of factored design moments (kip-ft.). $1.25\ (M_{DC1} + M_{DC2}) + 1.5\ M_{DW} + 1.75\ M_{LL+IM}$

f_ℓ : Factored calculated flange lateral bending stress as calculated using Article 6.10.1.6 and as further simplified by IDOT provisions (ksi).

$\phi_f M_n$: Factored nominal flexural resistance of the section determined as specified in Article 6.10.7.1 or A6 as applicable (kip-ft.).

f_s DC1: Un-factored stress at edge of flange for controlling steel flange due to vertical non-composite dead loads as calculated below (ksi).
M_{DC1} / S_s

f_s DC2: Un-factored stress at edge of flange for controlling steel flange due to vertical composite dead loads as calculated below (ksi).
$M_{DC2} / S_c(3n)$ or $M_{DC2} / S_c(cr)$ as applicable.

f_s DW: Un-factored stress at edge of flange for controlling steel flange due to vertical composite future wearing surface loads as calculated below (ksi).
$M_{DW} / S_c(3n)$ or $M_{DW} / S_c(cr)$ as applicable.

f_s (LL + IM): Un-factored stress at edge of flange for controlling steel flange due to vertical composite live load plus impact loads as calculated below (ksi).
$M_{LL+IM} / S_c(n)$ or $M_{LL+IM} / S_c(cr)$ as applicable.

$f_s + f_\ell/2$ (Service II): Sum of stresses as computed below (ksi).
f_s DC1 + f_s DC2 + f_s DW + 1.3 f_s (LL + IM) + $f_\ell/2$

Service II Resistance: Composite ($0.95R_hF_{yf}$) or noncomposite ($0.80R_hF_{yf}$) stress capacity according to Article 6.10.4.2 (ksi).

$f_s + f_\ell/3$ (Strength I): Sum of stresses as computed below on non-compact sections (ksi).
$1.25\ (f_s\ DC1 + f_s\ DC2) + 1.5\ f_s\ DW + 1.75\ f_s\ (LL + IM) + f_\ell/3$

$\phi_f F_n$: Factored nominal flexural resistance of the section as specified in Article 6.10.7.2 or 6.10.8 as applicable (ksi).

V_f : Maximum factored shear range in span computed according to Article 6.10.10.

LLDF: Live Load Distribution Factor for moment and shear computed according to Article 4.6.2.2 and further IDOT provisions.

OCF: Obtuse Correction Factor computed according to Article 4.6.2.2.3c or as further simplified by IDOT provisions.

R_{DC1} : Un-factored reaction due to non-composite dead load (kip).

R_{DC2} : Un-factored reaction due to long-term composite (superimposed excluding future wearing surface) dead load (kip).

R_{DW} : Un-factored reaction due to long-term composite (superimposed future wearing surface only) dead load (kip).

R_{LL} : Un-factored live load reaction (kip).

R_{IM} : Un-factored dynamic load allowance (impact) (kip).

R_{Total} (Strength I)(Impact): Strength I load combination of factored design reactions (kip).
$1.25\ (R_{DC1} + R_{DC2}) + 1.5R_{DW} + 1.75\ (R_{LL} + R_{IM})$

R_{Total} (Strength I)(No Impact): Strength I load combination of factored design reactions, not including (kip). dynamic load allowance (Impact) (kip).
$1.25\ (R_{DC1} + R_{DC2}) + 1.5R_{DW} + 1.75\ (R_{LL})$

INTERIOR GIRDER MOMENT TABLE

		0.4 Span 1	Pier	0.6 Span 2
I_s	(in^4)	19,229	30,822	19,229
$I_c(n)$	(in^4)	51,654	——	51,654
$I_c(3n)$	(in^4)	36,173	——	36,173
$I_c(cr)$	(in^4)	——	35,287	——
S_s	(in^3)	1,207	1,468	1,207
$S_c(n)$	(in^3)	1,595	——	1,595
$S_c(3n)$	(in^3)	1,472	——	1,472
$S_c(cr)$	(in^3)	——	1,539	——
S_x	(in^3)	1,595	——	1,595
DC1	(k/')	1.065	1.065	1.065
M_{DC1}	('k)	607	1771	954
DC2	(k/')	0.462	0.462	0.462
M_{DC2}	('k)	295	523	441
DW	(k/')	0.260	0.260	0.260
M_{DW}	('k)	166	295	248
LLDF		0.592	0.592	0.579
M_{LL+IM}	('k)	1,400	1,314	1,605
f_ℓ (Strength I)	(ksi)	0	0	0
$M_u + \frac{1}{3} f_\ell S_x$	('k)	3,805	5,577	4,920
$\phi_f M_n$	('k)	7,086	——	7,086
f_s DC1	(ksi)	6.03	14.48	9.49
f_s DC2	(ksi)	2.40	4.07	3.60
f_s DW	(ksi)	1.35	2.30	2.02
f_s (LL +IM)	(ksi)	10.53	10.24	12.07
f_ℓ (Service II)	(ksi)	0	0	0
$f_s + {}^{f}/_{2}$ (Service II)	(ksi)	23.47	34.16	30.80
Service II Resistance	(ksi)	47.50	47.50	47.50
$f_s + {}^{f}/_{3}$ (Strength I)	(ksi)	30.99	44.56	40.52
$\phi_f F_n$	(ksi)	50.00	50.00	50.00
V_f	(k)	18.9	27.4	20.0

INTERIOR GIRDER REACTION TABLE

		E. Abut.	Pier	W. Abut.
LLDF		0.767	0.767	0.767
OCF		1.15	1.15	1.15
R_{DC1}	(k)	46.7	146.5	41.2
R_{DC2}	(k)	14.6	45.9	12.9
R_{DW}	(k)	11.4	35.8	10.1
R_{LL}	(k)	84.2	158.0	82.0
R_{Im}	(k)	20.6	75.8	20.6
R_{Total} (Strength I)(Impact)	(k)	277.1	703.4	262.4
R_{Total} (Strength I)(No Impact)	(k)	240.0	570.7	226.3

	$\triangle_{Allow}$	$\triangle_{LL+IM}$ (*)
Service I live load plus impact deflection (inches) per AASHO LRFD Bridge Design Specification 9.5.2	1.37	1.18

(*) Calculated maximum deflection occurs in span 2.

MODEL: $MODELNAME
FILE NAME: G:\P220720 IDOT D1 PTB 204-001 Michigan City Rd Bridge\03A Design\01 CADD\02 Sheets\Structures\Bridge\016R62-028-GirderDet2.dgn

DELTA ENGINEERING GROUP, LLC
CONSULTING ENGINEERS, CONSTRUCTION MANAGERS, SURVEYORS
111 W JACKSON BLVD, SUITE 910
CHICAGO, IL 60604
T 312.377.7700, F 312.427.6145

USER NAME = rmamucod	DESIGNED - RC	REVISED -	
	DRAWN - RM	REVISED -	
PLOT SCALE = 2:0.0000 ':" / in.	CHECKED - SMK	REVISED -	
PLOT DATE = 12/13/2024	DATE - 12/13/2024	REVISED -	

STATE OF ILLINOIS
DEPARTMENT OF TRANSPORTATION

GIRDER DETAILS AND MOMENT TABLE
STRUCTURE NO. 016-8320

SCALE: SHEET S-28 OF S-50 SHEETS STA. TO STA.

F.A.I. RTE.	SECTION	COUNTY	TOTAL SHEETS	SHEET NO.
94	FAI 94 22 Structure 2	COOK	157	97
		CONTRACT NO. 62R62		
	ILLINOIS	FED. AID PROJECT		

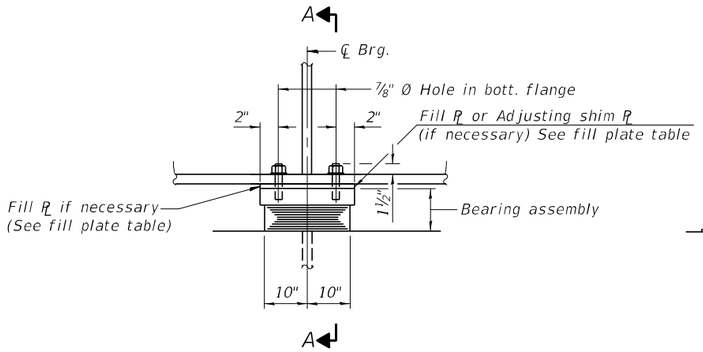

ELEVATION AT PIER

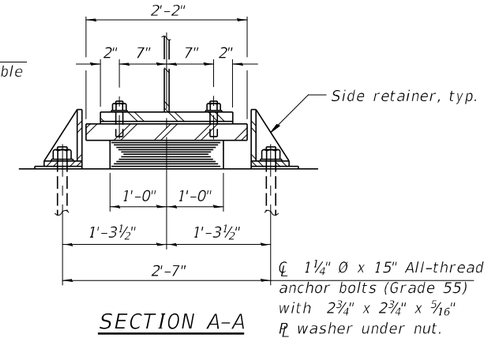

SECTION A-A

TYPE I ELASTOMERIC EXP. BRG.

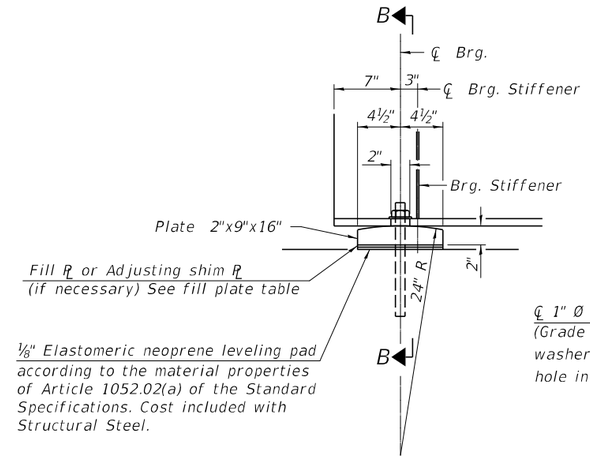

ELEVATION AT ABUTMENT

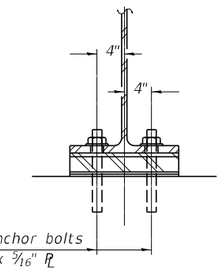

SECTION B-B

FIXED BEARING

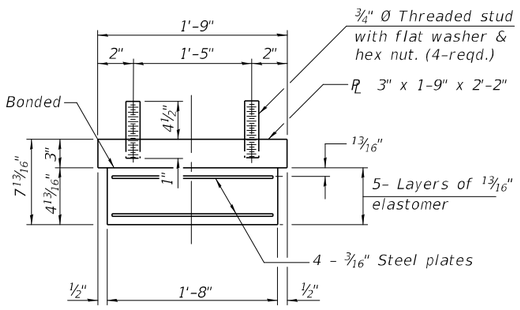

BEARING ASSEMBLY

Note:
Shim plates shall not be placed under bearing assembly.

FILL PLATE

WEST ABUTMENT	
Girder #	Dimensions
2	PL ⅛"x1'-4"x0'-9"
7	PL ½"x1'-4"x0'-9"

PIER	
Girder #	Dimensions
6	PL ⅝"x1'-6"x1'-9"
7	PL ½"x1'-6"x1'-9"
10	PL ¼"x1'-6"x1'-9"

EAST ABUTMENT	
Girder #	Dimensions
4	PL ⅝"x1'-4"x0'-9"

Notes:
The structural steel plates of the Bearing Assembly shall conform to the requirements of AASTHO M270 Grade 50. All bearing plates, side retainers, anchor bolts, nuts and washers shall be galvanized according to AASHTO M111 or M232 as applicable.
Side retainers and stainless steel plates shall be included in the cost of Elastomeric Bearing Assembly, Type I.
Anchor bolts and side retainers at all supports shall be installed as each member is erected unless an equivalent temporary means of lateral restraint is used.
Two ⅛" adjusting shims shall be provided for each bearing in addition to all other plates or shims and placed as shown on bearing details.
Bearing seat surfaces shall be constructed or adjusted to the designated elevations within a tolerance of ⅛" (0.01 ft.). Adjustments shall be made either by grinding the surface or by shimming the bearings.

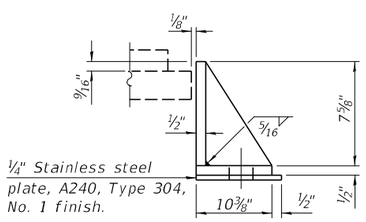

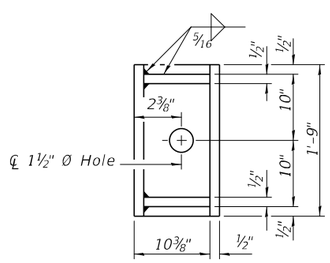

SIDE RETAINER

Equivalent rolled angle with stiffeners will be allowed in lieu of welded plates.

BILL OF MATERIAL

Item	Unit	Total
Elastomeric Bearing Assembly Type I	Each	10
Anchor Bolts, 1"	Each	40
Anchor Bolts 1¼"	Each	20

MODEL: TSL_Plan
FILE NAME: G:\P20720 IDOT D1 PTB 204-001 Michigan City Rd Bridge\03A Design\01 CADD\02 Sheet\Structures\Bridge\016R62-029-BearingDet.dgn

DELTA ENGINEERING GROUP, LLC
CONSULTING ENGINEERS, CONSTRUCTION MANAGERS, SUPERVISORS
111 W JACKSON BLVD, SUITE 910
CHICAGO, IL 60604
T 312.377.7700, F 312.427.6145

USER NAME = $USER$	DESIGNED - RC	REVISED -
	DRAWN - RM	REVISED -
PLOT SCALE = $SCALE$	CHECKED - SMK	REVISED -
PLOT DATE = 2/25/2025	DATE - 12/13/2024	REVISED -

STATE OF ILLINOIS
DEPARTMENT OF TRANSPORTATION

BEARING DETAILS
STRUCTURE NO. 016-8320

SCALE: | SHEET S-29 OF S-50 SHEETS | STA. | TO STA.

F.A.I. RTE.	SECTION	COUNTY	TOTAL SHEETS	SHEET NO.
94	FAI 94 22 Structure 2	COOK	157	98
		CONTRACT NO. 62R62		
	ILLINOIS	FED. AID PROJECT		

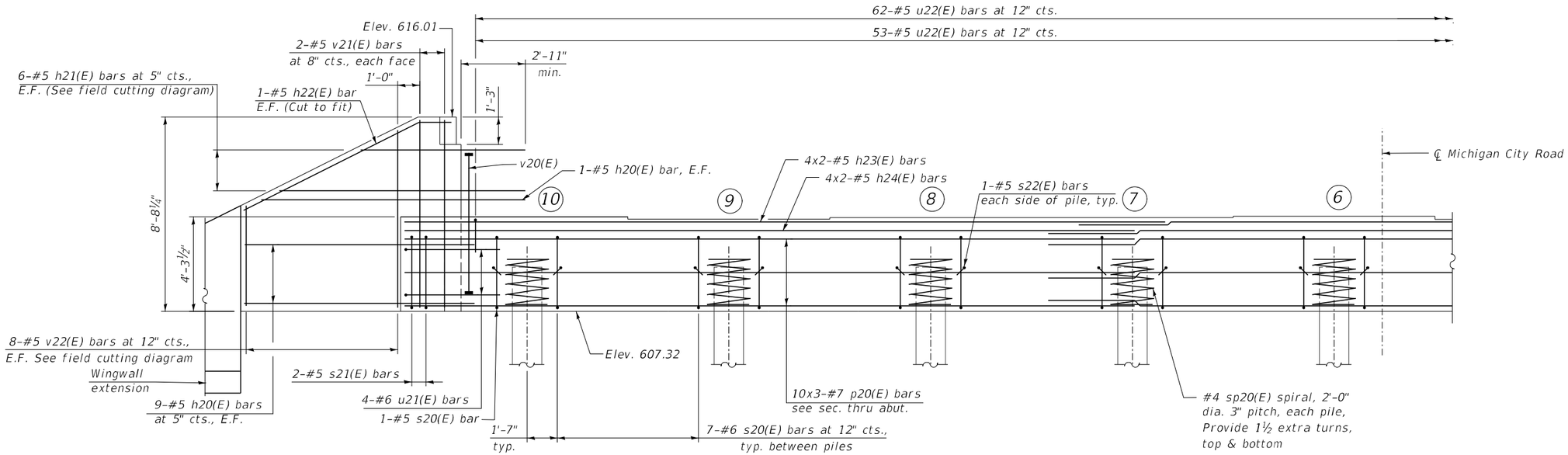

ELEVATION

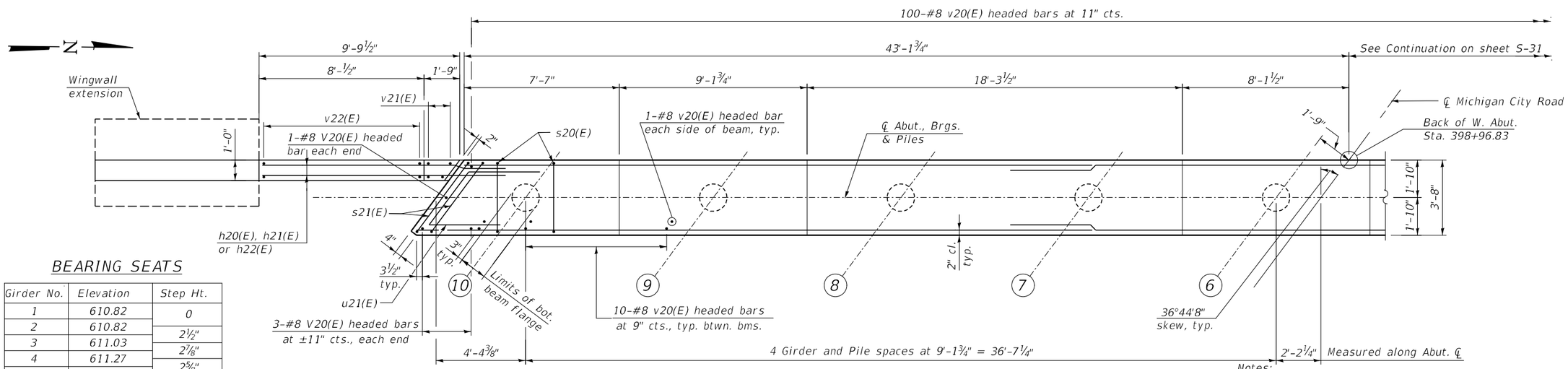

PLAN

BEARING SEATS

Girder No.	Elevation	Step Ht.
1	610.82	0
2	610.82	2½"
3	611.03	2⅞"
4	611.27	2⅝"
5	611.49	1¾"
6	611.64	⅞"
7	611.57	0
8	611.57	⅞"
9	611.50	1⅜"
10	611.61	

PILE DATA

Type: MS 16"x0.312" with pile shoes
Nominal Required Bearing: 469 kips
Factored Resistance Available: 258 kips
Est. Length: 54'
No. Production Piles: 9
No. Test Piles: 1

MINIMUM BAR LAP

#5 = 3'-7"
#7 = 5'-0"

Notes:
1. See Sheet S-33 for bar cutting diagrams, typical section, bar diagrams, and BOM.
2. Cut h23(E) bars to fit skew.
3. Pour steps monolithically with cap.
4. For details of piles see sheet S-43.
5. For wingwall extension details, see sheet S-32.
6. Piles shall be driven through 24" diameter precored holes with pipe sleeve according to Article 512.09(c) of the Standard Specifications. Fill up pipe sleeve with sand except leave top 10'-0" empty. Cost included in Driving Piles. see sheet S-1 for note in Elevation View.
7. See sheet S-5 for Sequence of Construction.

DELTA ENGINEERING GROUP, LLC
CONSULTING ENGINEERS, CONSTRUCTION MANAGERS, SURVEYORS
111 W JACKSON BLVD, SUITE 910
CHICAGO, IL 60604
T 312.377.7700, F 312.427.6145

USER NAME = rmamucod	DESIGNED - RC	REVISED -	
	DRAWN - RM	REVISED -	
PLOT SCALE = 5:4,0000 ':" / in.	CHECKED - SMK	REVISED -	
PLOT DATE = 12/13/2024	DATE - 12/13/2024	REVISED -	

STATE OF ILLINOIS
DEPARTMENT OF TRANSPORTATION

WEST ABUTMENT PLAN AND ELEVATION - 1
STRUCTURE NO. 016-8320

SCALE: | SHEET S-30 OF S-50 SHEETS | STA. | TO STA.

F.A.I. RTE.	SECTION	COUNTY	TOTAL SHEETS	SHEET NO.
94	FAI 94 22 Structure 2	COOK	157	99
		CONTRACT NO. 62R62		
		ILLINOIS	FED. AID PROJECT	

MODEL: $MODELNAME$
FILE NAME: G:\P230720 IDOT D1 PTB 204-001 Michigan City Rd Bridge\03A Design\01 CADD\02 Sheets\Structures\Bridge\D162R67-030-Abutment W.dgn

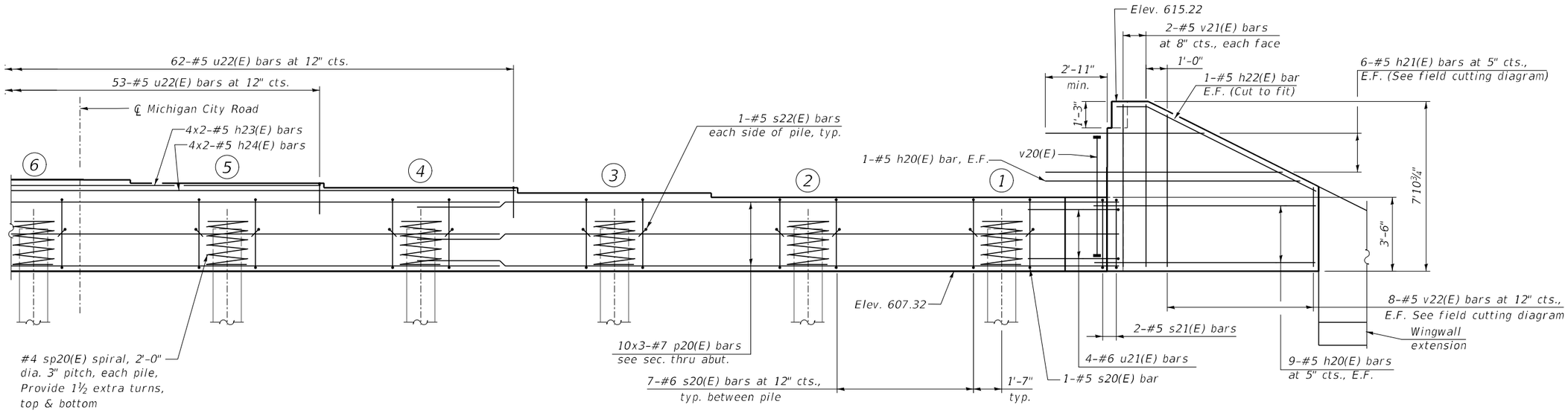

ELEVATION

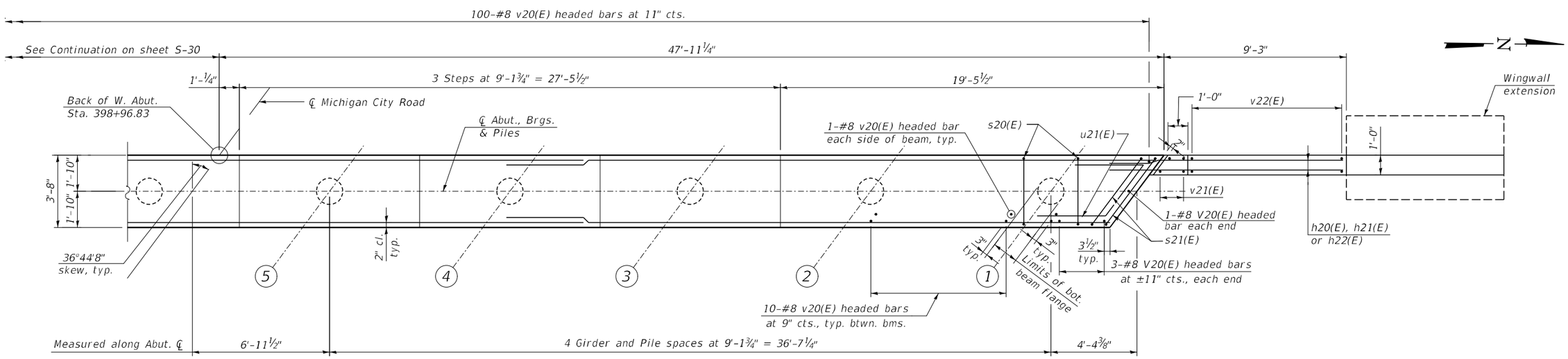

PLAN

Note:
See Sheet S-30 for bearing seats and pile data.

MODEL: $MODELNAME$
FILE NAME: G:\P20720 IDOT D1 PTB 204-001 Michigan City Rd Bridge\03A Design\01 CADD\02 Sheets\StructureBridge\0162R67-031-Abutment W.dgn

DELTA ENGINEERING GROUP, LLC
CONSULTING ENGINEERS, CONSTRUCTION MANAGERS, SURVEYORS
111 W JACKSON BLVD, SUITE 910
CHICAGO, IL 60604
T 312.377.7700, F 312.427.6145

USER NAME = rmamucod	DESIGNED - RC	REVISED -	
	DRAWN - RM	REVISED -	
PLOT SCALE = 5:4,0000 ':" / in.	CHECKED - SMK	REVISED -	
PLOT DATE = 12/13/2024	DATE - 12/13/2024	REVISED -	

STATE OF ILLINOIS
DEPARTMENT OF TRANSPORTATION

WEST ABUTMENT PLAN AND ELEVATION - 2
STRUCTURE NO. 016-8320

SCALE: | SHEET S-31 OF S-50 SHEETS | STA. | TO STA.

F.A.I. RTE.	SECTION	COUNTY	TOTAL SHEETS	SHEET NO.
94	FAI 94 22 Structure 2	COOK	157	100
		CONTRACT NO. 62R62		
		ILLINOIS	FED. AID PROJECT	

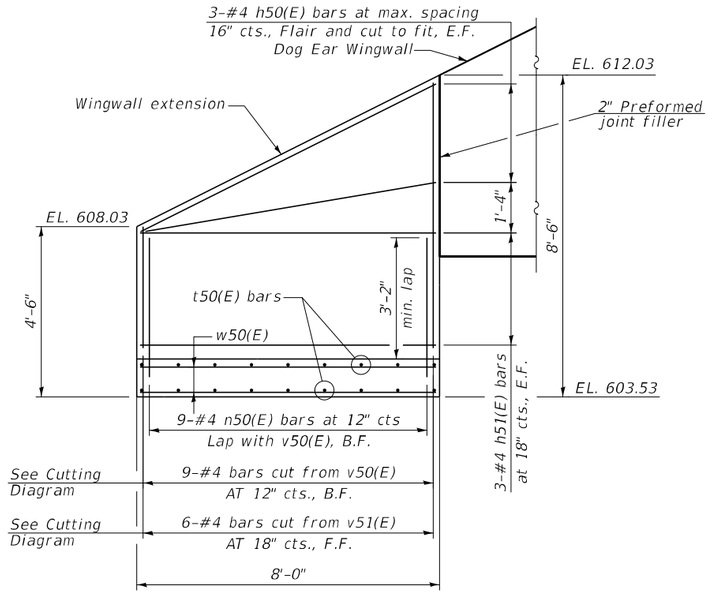

SOUTH WINGWALL EXTENSION ELEVATION

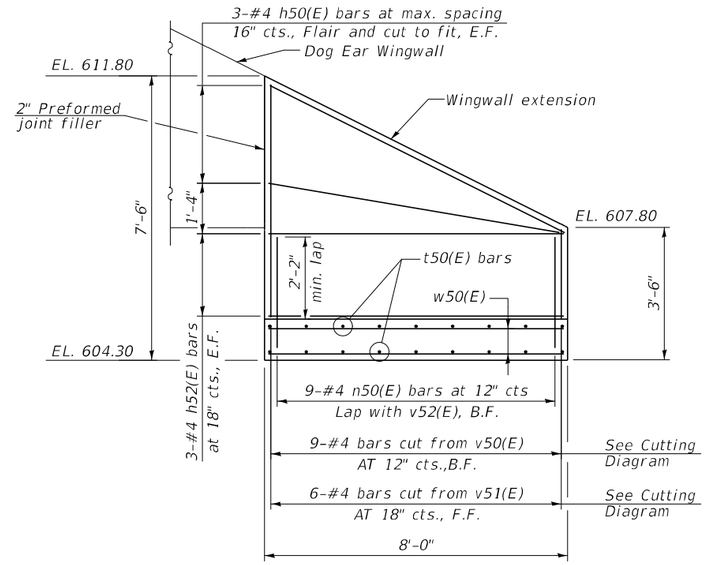

NORTH WINGWALL EXTENSION ELEVATION

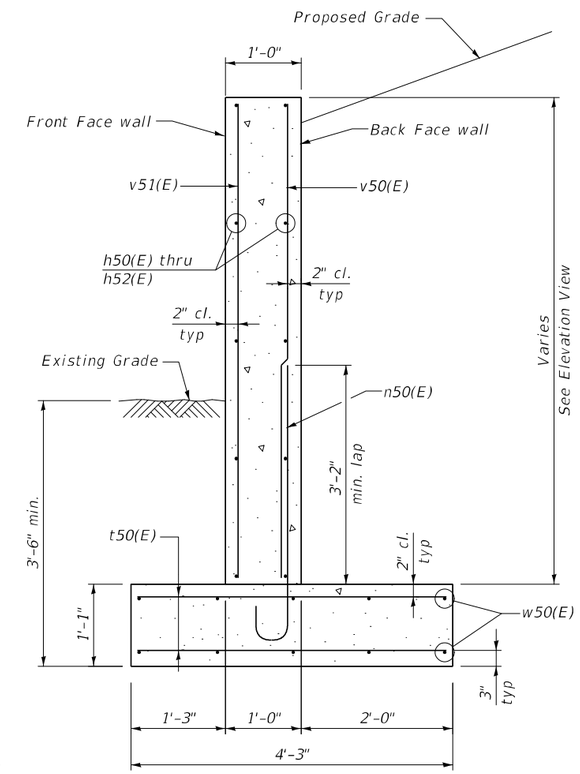

TYPICAL CROSS SECTION
THROUGH WING WALL EXTENSION

Maximum applied service bearing pressure
Q_{max} =2100 psf

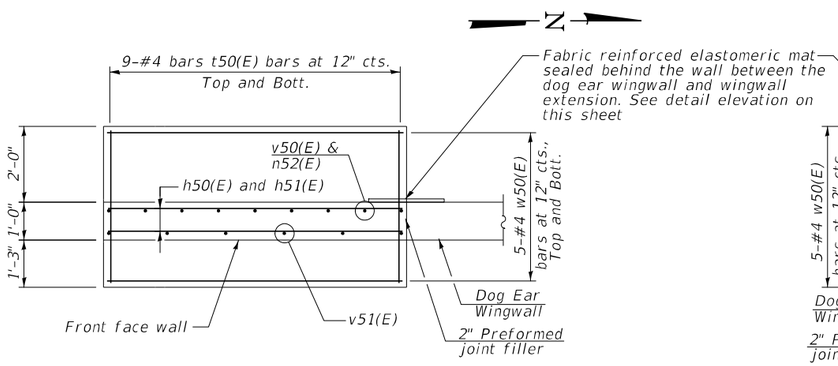

SOUTH WINGWALL EXTENSION PLAN

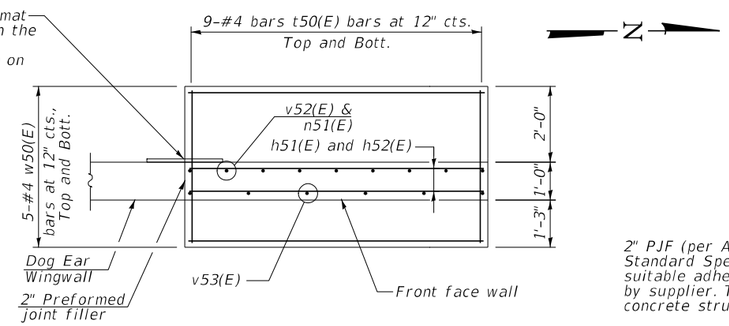

NORTH WINGWALL EXTENSION PLAN

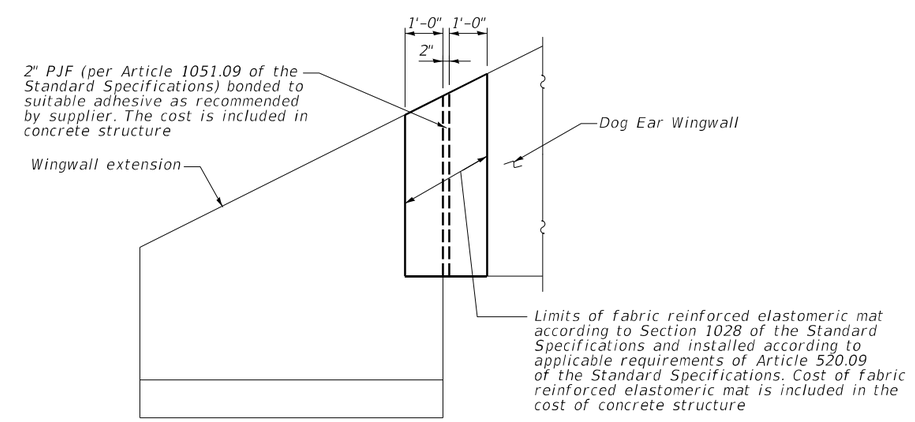

ELEVATION AT BACK OF WINGWALLS

MODEL: $MODELNAME$
FILE NAME: G:\P230720 IDOT D1 PTB 204-001 Michigan City Rd Bridge\03A Design\01 CAD\02 Sheets\Structures\Bridge\016R62-032-W Wingwall Ext.dgn

DELTA ENGINEERING GROUP, LLC
CONSULTING ENGINEERS, CONSTRUCTION MANAGERS, SURVEYORS
111 W JACKSON BLVD, SUITE 910
CHICAGO, IL 60604
T 312.377.7700, F 312.427.6145

USER NAME = rmamucod	DESIGNED - RC	REVISED -	
	DRAWN - RM	REVISED -	
PLOT SCALE = 4:0.0000 ':" / in.	CHECKED - SMK	REVISED -	
PLOT DATE = 12/13/2024	DATE - 12/13/2024	REVISED -	

STATE OF ILLINOIS
DEPARTMENT OF TRANSPORTATION

WEST ABUTMENT WINGWALL EXTENSION
STRUCTURE NO. 016-8320

SCALE: | SHEET S-32 OF S-50 SHEETS | STA. | TO STA.

F.A.I. RTE.	SECTION	COUNTY	TOTAL SHEETS	SHEET NO.
94	FAI 94 22 Structure 2	COOK	157	101
		CONTRACT NO. 62R62		
		ILLINOIS	FED. AID PROJECT	

BILL OF MATERIAL

	Bar	No.	Size	Length	Shape
	h20(E)	40	#5	13'-6"	
	h21(E)	12	#5	19'-2"	
	h22(E)	4	#5	10'-2"	
	h23(E)	8	#5	30'-8"	
	h24(E)	8	#5	26'-2"	
	h50(E)	12	#4	8'-9"	
	h51(E)	6	#4	7'-8"	
	h52(E)	6	#4	7'-8"	
	n50(E)	18	#4	4'-1"	
	p20(E)	30	#7	33'-6"	
	s20(E)	65	#6	14'-4"	
	s21(E)	4	#6	16'-0"	
	s22(E)	20	#5	4'-2"	
*	sp20(E)	10	#4	2'-0"	
	t50(E)	36	#4	3'-11"	
	u21(E)	8	#6	12'-8"	
	u22(E)	115	#5	9'-2"	
	v20(E)	218	#8	6'-0"	
	v21(E)	8	#5	8'-6"	
	v22(E)	16	#5	10'-0"	
	v50(E)	9	#4	9'-2"	
	v51(E)	6	#4	9'-2"	
	w50(E)	20	#4	7'-8"	
	Removal and Disposal of Unsuitable Material for Structures		Cu. yd.	157.0	
	Concrete Structures		Cu. yd.	70.9	
	Reinforcement Bars, Epoxy Coated		Pound	13,160	
	Furnishing Metal Shell Piles 16"x0.312		Foot	486	
	Driving Piles		Foot	486	
	Test Pile Metal Shells		Each	1	
	Pile Shoes		Each	10	

* Length is height of spiral.

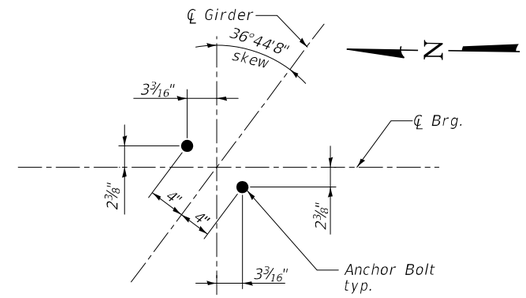

BEARING ANCHOR BOLT LAYOUT DETAILS

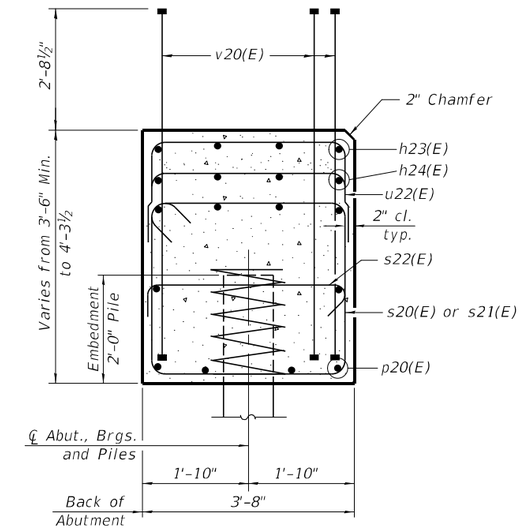

SEC. THRU ABUT.

Dimensions at right angles to abutment.

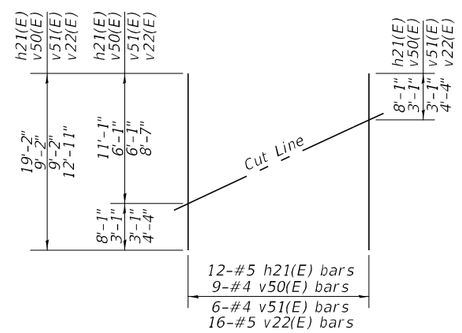

FIELD CUTTING DIAGRAM

Order h21(E), v22(E), v50(E) and v51(E) full length. Cut as shown and use remainder of bars in opposite wing.

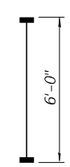

BAR v20(E)

(Headed-436 #8 Bar Terminators)

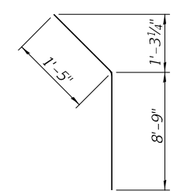

BAR h22(E)

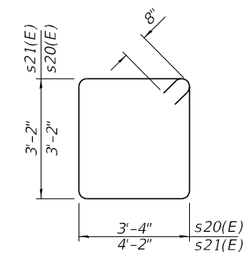

BAR s20(E) & s21(E)

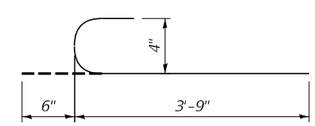

n50(E) Bar

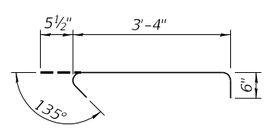

BAR s22(E)

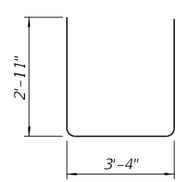

BAR u22(E)

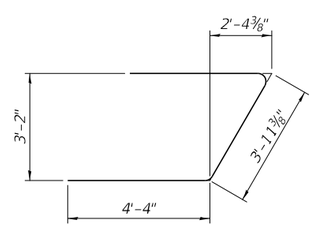

BAR u21(E)

Note:
1. Bar Terminators, paid for separately. See Total Bill of Material.

MODEL: TSI_Plan
FILE NAME: G:\P20720 IDOT D1 PTB 204-001 Michigan City Rd Bridge\03A Design\01 CADD\02 Sheets\Structures\Bridge\0162R62-033-Abutment_W_Det.dgn

DELTA ENGINEERING GROUP, LLC
CONSULTING ENGINEERS, CONSTRUCTION MANAGERS, SURVEYORS
111 W JACKSON BLVD, SUITE 910
CHICAGO, IL 60604
T 312.377.7700, F 312.427.6145

USER NAME = $USER$	DESIGNED - RC	REVISED -	
	DRAWN - RM	REVISED -	
PLOT SCALE = $SCALE$	CHECKED - SMK	REVISED -	
PLOT DATE = 2/25/2025	DATE - 12/13/2024	REVISED -	

STATE OF ILLINOIS
DEPARTMENT OF TRANSPORTATION

WEST ABUTMENT DETAILS
STRUCTURE NO. 016-8320

SCALE: | SHEET S-33 OF S-50 SHEETS | STA. | TO STA.

F.A.I. RTE.	SECTION	COUNTY	TOTAL SHEETS	SHEET NO.
94	FAI 94 22 Structure 2	COOK	157	102
		CONTRACT NO. 62R62		
	ILLINOIS	FED. AID PROJECT		

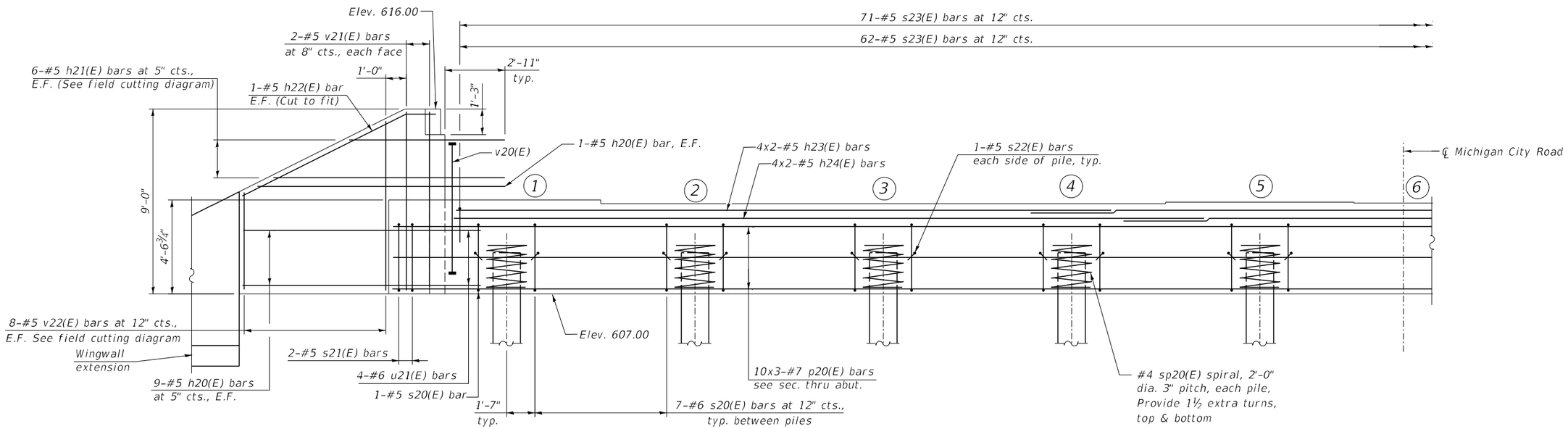

ELEVATION

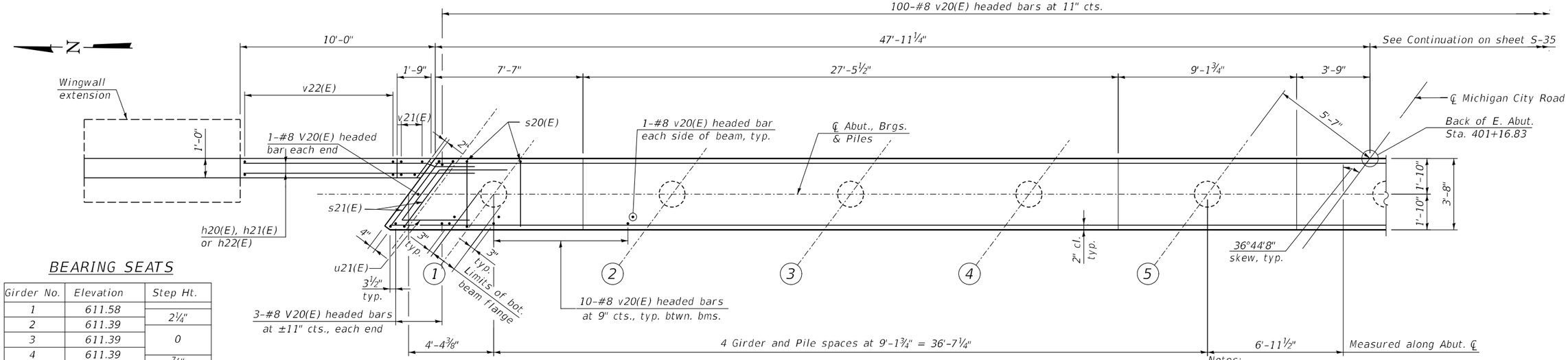

PLAN

BEARING SEATS

Girder No.	Elevation	Step Ht.
1	611.58	
		2¼"
2	611.39	
		0
3	611.39	
		⅞"
4	611.39	
		½"
5	611.46	
		2½"
6	611.42	
		2⅞"
7	611.21	
		3⅛"
8	610.97	
		1⅛"
9	610.71	
10	610.62	

PILE DATA

Type: MS 16" x 0.312" with pile shoes
Nominal Required Bearing: 582 kips
Factored Resistance Available: 320 kips
Est. Length: 56'
No. Production Piles: 9
No. Test Piles: 1

MINIMUM BAR LAP

#5 = 3'-7"
#7 = 5'-0"

Notes:
1. See Sheet S-33 for bar cutting diagrams, typical section, bar diagrams, and BOM.
2. Cut h23(E) bars to fit skew.
3. Pour steps monolithically with cap.
4. For details of piles see sheet S-43.
5. For wingwall extension details, see sheet S-32.
6. Piles shall be driven through 24" diameter precored holes with pipe sleeve according to Article 512.09(c) of the Standard Specifications. Fill up pipe sleeve with sand except leave top 10'-0" empty. Cost included in Driving Piles. see sheet S-1 for note in Elevation View.
7. See sheet S-5 for Sequence of Construction.

MODEL: ABUT PLAN
FILE NAME: G:\P230720 IDOT D1 PTB 204-001 Michigan City Rd Bridge\03A Design\01 CADD\02 Sheets\Structures\Bridge\0162R67-034-Abutment E.dgn

DELTA ENGINEERING GROUP, LLC
CONSULTING ENGINEERS, CONSTRUCTION MANAGERS, SURVEYORS
111 W JACKSON BLVD, SUITE 910
CHICAGO, IL 60604
T 312.377.7700, F 312.427.6145

USER NAME = $USER$	DESIGNED - RC	REVISED -	
	DRAWN - RM	REVISED -	
PLOT SCALE = $SCALE$	CHECKED - SMK	REVISED -	
PLOT DATE = 2/25/2025	DATE - 12/13/2024	REVISED -	

STATE OF ILLINOIS
DEPARTMENT OF TRANSPORTATION

EAST ABUTMENT PLAN AND ELEVATION - 1
STRUCTURE NO. 016-8320

SCALE: | SHEET S-34 OF S-50 SHEETS | STA. | TO STA.

F.A.I. RTE.	SECTION	COUNTY	TOTAL SHEETS	SHEET NO.
94	FAI 94 22 Structure 2	COOK	157	103
		CONTRACT NO. 62R62		
		ILLINOIS	FED. AID PROJECT	

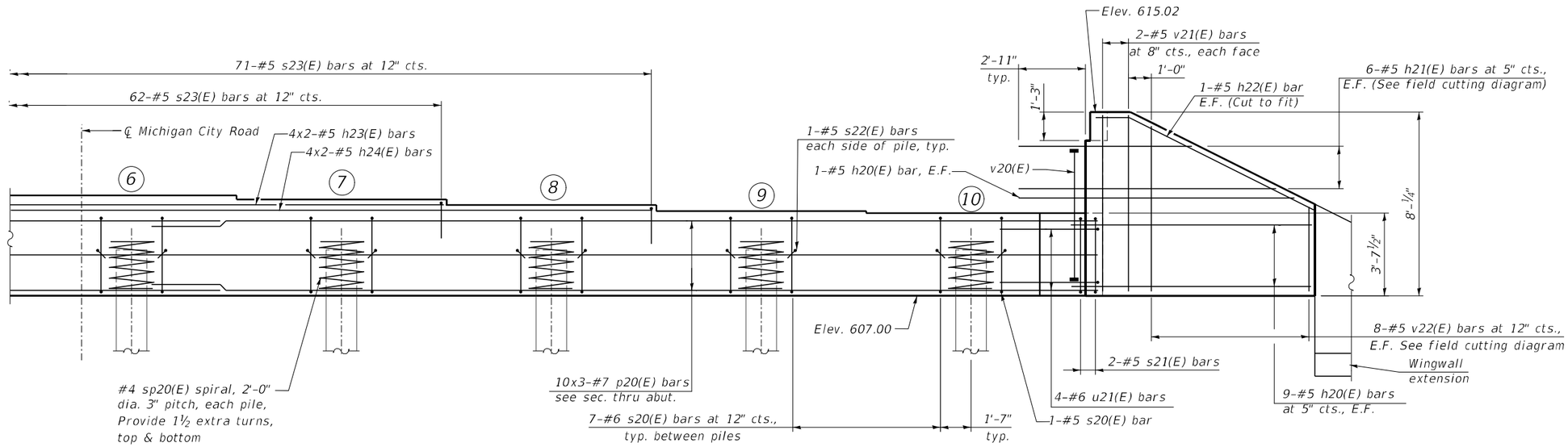

ELEVATION

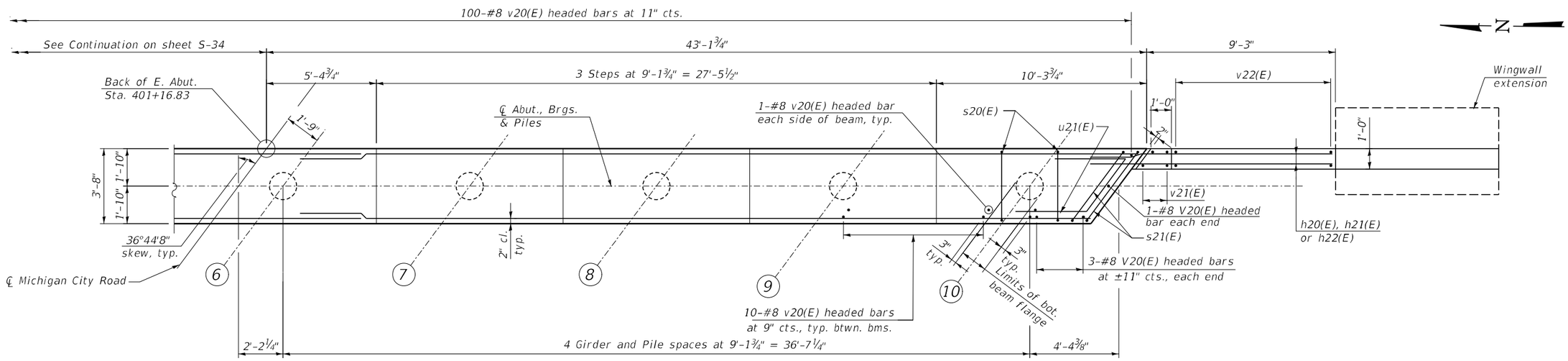

PLAN

Note:
See Sheet S-34 for bearing seats and pile data.

MODEL: $MODEL NAMES
FILE NAME: G:\P220720 IDOT D1 PTB 204-001 Michigan City Rd Bridge\03A Design\01 CADD\02 Sheet\Structures\Bridge\016R62-035-Abutment E.dgn

DELTA ENGINEERING GROUP, LLC
CONSULTING ENGINEERS, CONSTRUCTION MANAGERS, SUPERVISORS
111 W JACKSON BLVD, SUITE 910
CHICAGO, IL 60604
T 312.377.7700, F 312.427.6145

USER NAME = rmanucod	DESIGNED - RC	REVISED -	
	DRAWN - RM	REVISED -	
PLOT SCALE = 5:4.0000 ':" / in.	CHECKED - SMK	REVISED -	
PLOT DATE = 12/13/2024	DATE - 12/13/2024	REVISED -	

STATE OF ILLINOIS
DEPARTMENT OF TRANSPORTATION

EAST ABUTMENT PLAN AND ELEVATION - 2
STRUCTURE NO. 016-8320

SCALE: | SHEET S-35 OF S-50 SHEETS | STA. | TO STA.

F.A.I. RTE.	SECTION	COUNTY	TOTAL SHEETS	SHEET NO.
94	FAI 94 22 Structure 2	COOK	157	104
		CONTRACT NO. 62R62		
	ILLINOIS	FED. AID PROJECT		

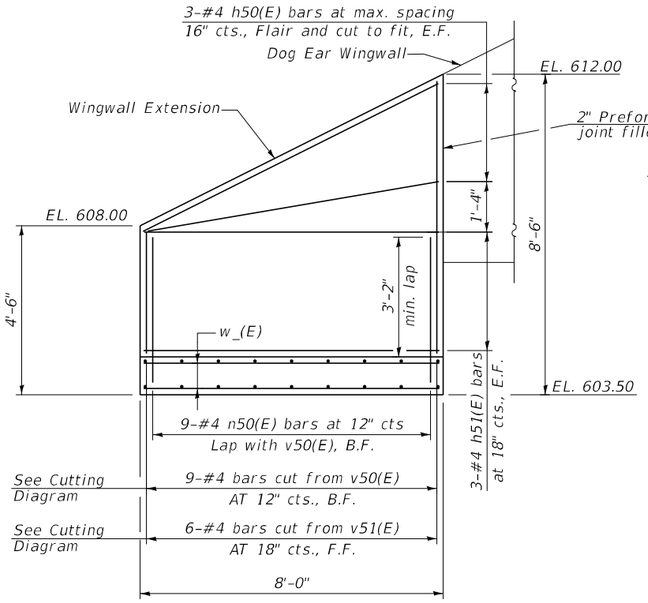

SOUTH WINGWALL EXTENSION ELEVATION

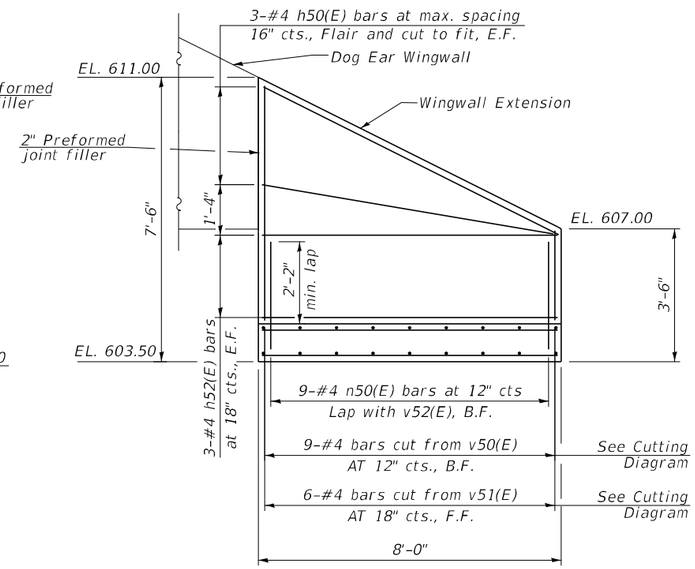

NORTH WINGWALL EXTENSION ELEVATION

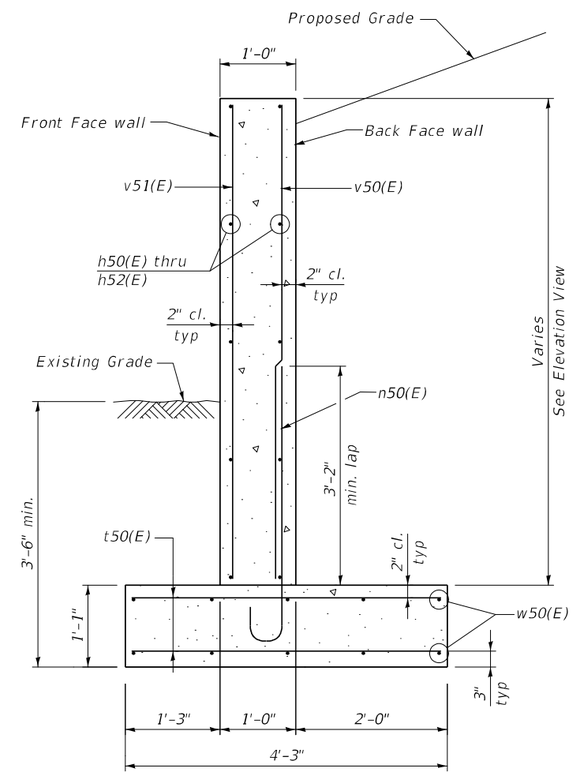

TYPICAL CROSS SECTION
THROUGH WING WALL EXTENSION

Maximum applied service bearing pressure
Q_{max} =2100 psf

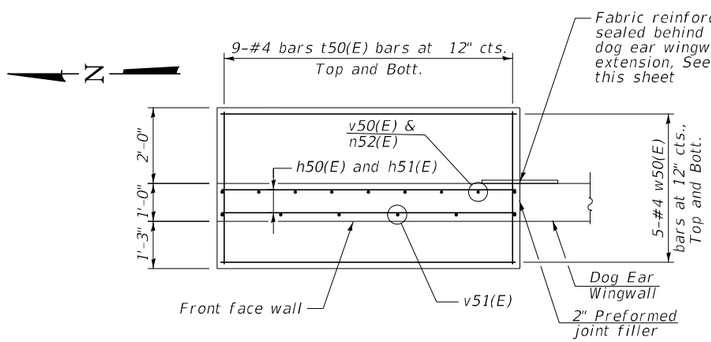

SOUTH WINGWALL EXTENSION PLAN

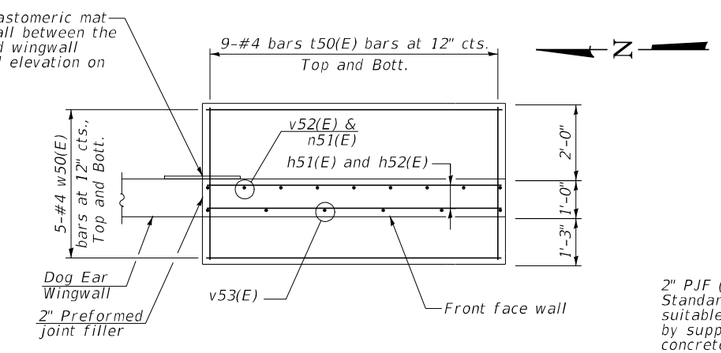

NORTH WINGWALL EXTENSION PLAN

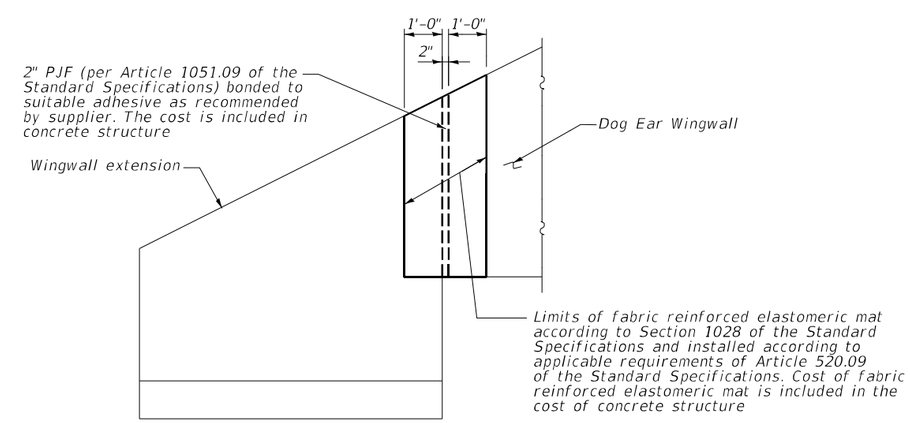

ELEVATION AT BACK OF WINGWALLS

MODEL: $MODELNAME$
FILE NAME: G:\P230720 IDOT D1 PTB 204-001 Hickson City Rd Bridge\03A Design\01 CADD\02 Sheets\Structures\Bridge\0162R67-036-E Wingwall Ext.dgn

DELTA ENGINEERING GROUP, LLC
CONSULTING ENGINEERS, CONSTRUCTION MANAGERS, SURVEYORS
111 W JACKSON BLVD, SUITE 910
CHICAGO, IL 60604
T 312.377.7700, F 312.427.6145

USER NAME = rmamucod	DESIGNED - RC	REVISED -	
	DRAWN - RM	REVISED -	
PLOT SCALE = 4:0.0000 ':" / in.	CHECKED - SMK	REVISED -	
PLOT DATE = 12/13/2024	DATE - 12/13/2024	REVISED -	

STATE OF ILLINOIS
DEPARTMENT OF TRANSPORTATION

EAST ABUTMENT WINGWALL EXTENSION
STRUCTURE NO. 016-8320

SCALE: | SHEET S-36 OF S-50 SHEETS | STA. | TO STA.

F.A.I. RTE.	SECTION	COUNTY	TOTAL SHEETS	SHEET NO.
94	FAI 94 22 Structure 2	COOK	157	105
		CONTRACT NO. 62R62		
	ILLINOIS	FED. AID PROJECT		

BILL OF MATERIAL

	Bar	No.	Size	Length	Shape
	h20(E)	40	#5	13'-6"	
	h21(E)	12	#5	19'-2"	
	h22(E)	4	#5	10'-2"	
	h23(E)	8	#5	30'-8"	
	h24(E)	8	#5	26'-2"	
	h50(E)	12	#4	8'-9"	
	h51(E)	6	#4	7'-8"	
	h52(E)	6	#4	7'-8"	
	n50(E)	18	#4	4'-1"	
	p20(E)	30	#7	33'-6"	
	s20(E)	65	#6	14'-4"	
	s21(E)	4	#6	16'-0"	
	s22(E)	20	#5	4'-2"	
*	sp20(E)	10	#4	2'-0"	
	t50(E)	36	#4	3'-11"	
	u21(E)	8	#6	12'-8"	
	u22(E)	115	#5	9'-2"	
	v20(E)	218	#8	6'-0"	
	v21(E)	8	#5	8'-6"	
	v22(E)	16	#5	10'-0"	
	v50(E)	9	#4	9'-2"	
	v51(E)	6	#4	9'-2"	
	w50(E)	20	#4	7'-8"	
	Removal and Disposal of Unsuitable Material for Structures		Cu. yd.	157.0	
	Concrete Structures		Cu. yd.	70.9	
	Reinforcement Bars, Epoxy Coated		Pound	13,160	
	Furnishing Metal Shell Piles 16"x0.312		Foot	504	
	Driving Piles		Foot	504	
	Test Pile Metal Shells		Each	1	
	Pile Shoes		Each	10	

* Length is height of spiral.

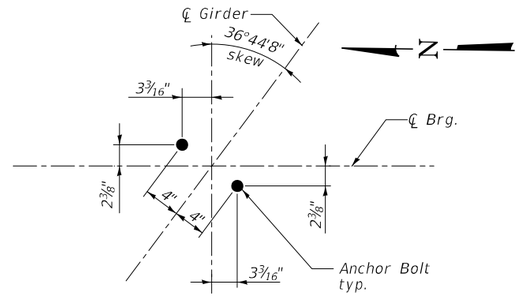

BEARING ANCHOR BOLT LAYOUT DETAILS

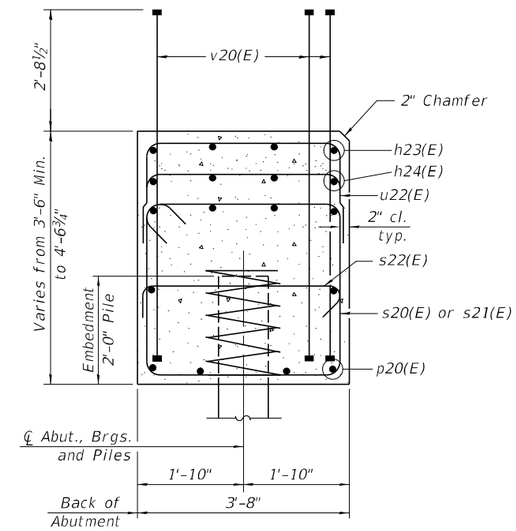

SEC. THRU ABUT.

Dimensions at right angles to abutment.

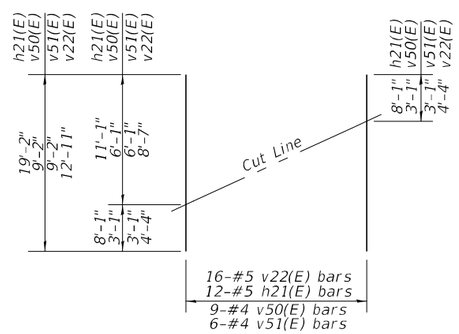

FIELD CUTTING DIAGRAM

Order h21(E), v22(E), v50(E) and v51(E) full length. Cut as shown and use remainder of bars in opposite wing.

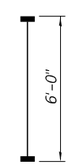

BAR v20(E)

(Headed-436 #8 Bar Terminators)

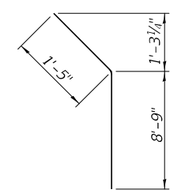

BAR h22(E)

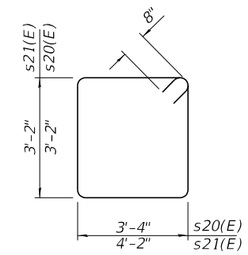

BAR s20(E) & s21(E)

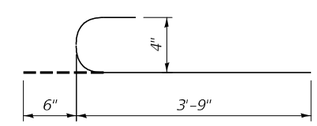

n50(E) Bar

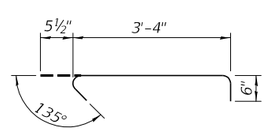

BAR s22(E)

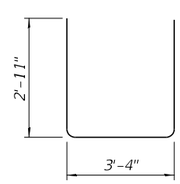

BAR u22(E)

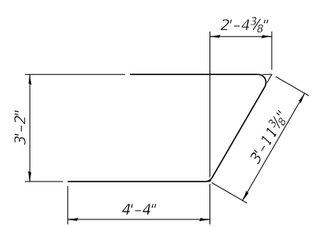

BAR u21(E)

Note:

1. Bar Terminators, paid for separately. See Total Bill of Material.

MODEL: TSL_Plan
FILE NAME: G:\P20720 IDOT D1 PTB 204-001 Michigan City Rd Bridge\03A Design\01 CADD\02 Sheets\Structures\Bridge\016R62-037-Abutment_E Det.dgn

DELTA ENGINEERING GROUP, LLC
CONSULTING ENGINEERS, CONSULTING SURVEYORS, SCANNING
111 W JACKSON BLVD, SUITE 910
CHICAGO, IL 60604
T 312.377.7700, F 312.427.6145

USER NAME = $USER$	DESIGNED - RC	REVISED -	
	DRAWN - RM	REVISED -	
PLOT SCALE = $SCALE$	CHECKED - SMK	REVISED -	
PLOT DATE = 2/25/2025	DATE - 12/13/2024	REVISED -	

STATE OF ILLINOIS
DEPARTMENT OF TRANSPORTATION

EAST ABUTMENT DETAILS
STRUCTURE NO. 016-8320

SCALE: | SHEET S-37 OF S-50 SHEETS | STA. | TO STA.

F.A.I. RTE.	SECTION	COUNTY	TOTAL SHEETS	SHEET NO.
94	FAI 94 22 Structure 2	COOK	157	106
		CONTRACT NO. 62R62		
	ILLINOIS	FED. AID PROJECT		

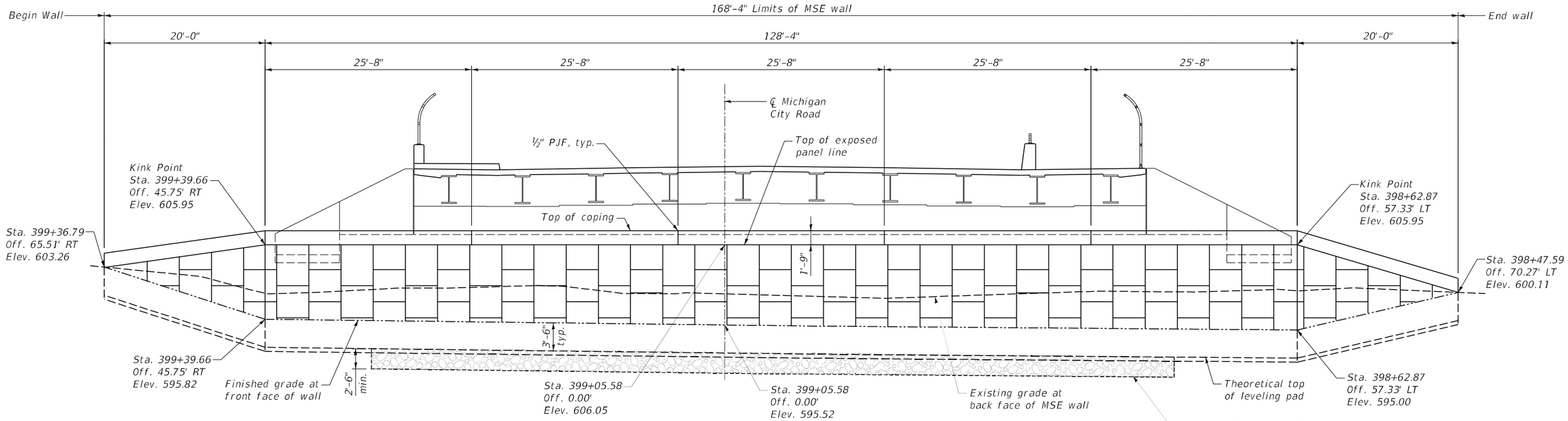

WEST ABUTMENT MSE WALL

(Unfolded elevation along front face of wall)

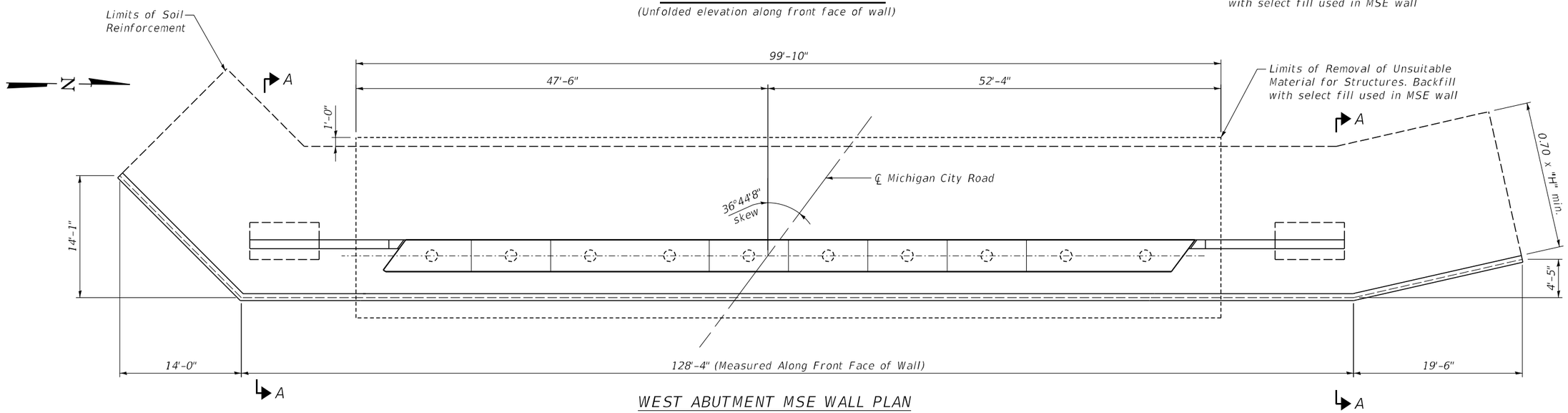

WEST ABUTMENT MSE WALL PLAN

BILL OF MATERIAL

	Item	Unit	Quantity
	Mechanically Stabilized Earth Retaining Wall	Sq ft	2,155
*	Structure Excavation	Cu. yd.	157

* For location, See S-5 section D.

Note:
For section A-A, See sheet S-3.

MODEL: TSL_Plan
FILE NAME: G:\P20720 IDOT D1 PTB 204-001 Michigan City Rd Bridge\03A Design\01 CADD\02 Sheets\Structures\Bridge\016R62-038-MSEwall W.dgn

DELTA ENGINEERING GROUP, LLC
CONSULTING ENGINEERS, CONSTRUCTION MANAGERS, ALL STAFF WORK
111 W JACKSON BLVD, SUITE 910
CHICAGO, IL 60604
T 312.377.7700, F 312.427.6145

USER NAME = $USER$	DESIGNED - RC	REVISED -	
	DRAWN - RM	REVISED -	
PLOT SCALE = $SCALE$	CHECKED - SMK	REVISED -	
PLOT DATE = 2/25/2025	DATE - 12/13/2024	REVISED -	

STATE OF ILLINOIS
DEPARTMENT OF TRANSPORTATION

WEST MSE WALL DETAILS
STRUCTURE NO. 016-8320

SCALE: | SHEET S-38 OF S-50 SHEETS | STA. TO STA.

F.A.I. RTE.	SECTION	COUNTY	TOTAL SHEETS	SHEET NO.
94	FAI 94 22 Structure 2	COOK	157	107
		CONTRACT NO. 62R62		
	ILLINOIS	FED. AID PROJECT		

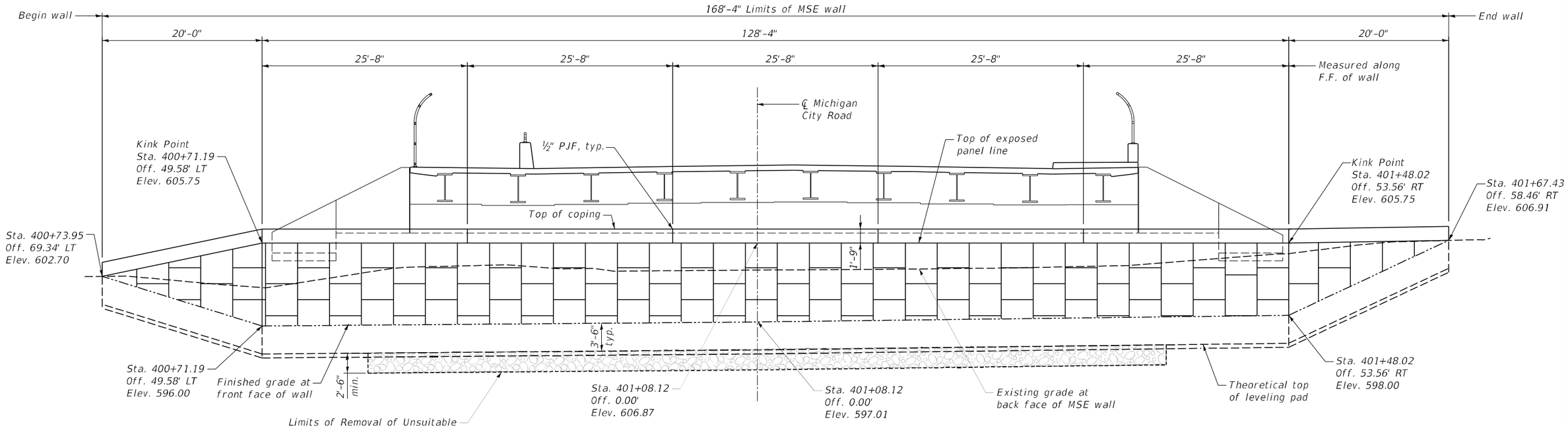

EAST ABUTMENT MSE WALL

(Unfolded elevation along front face of wall)

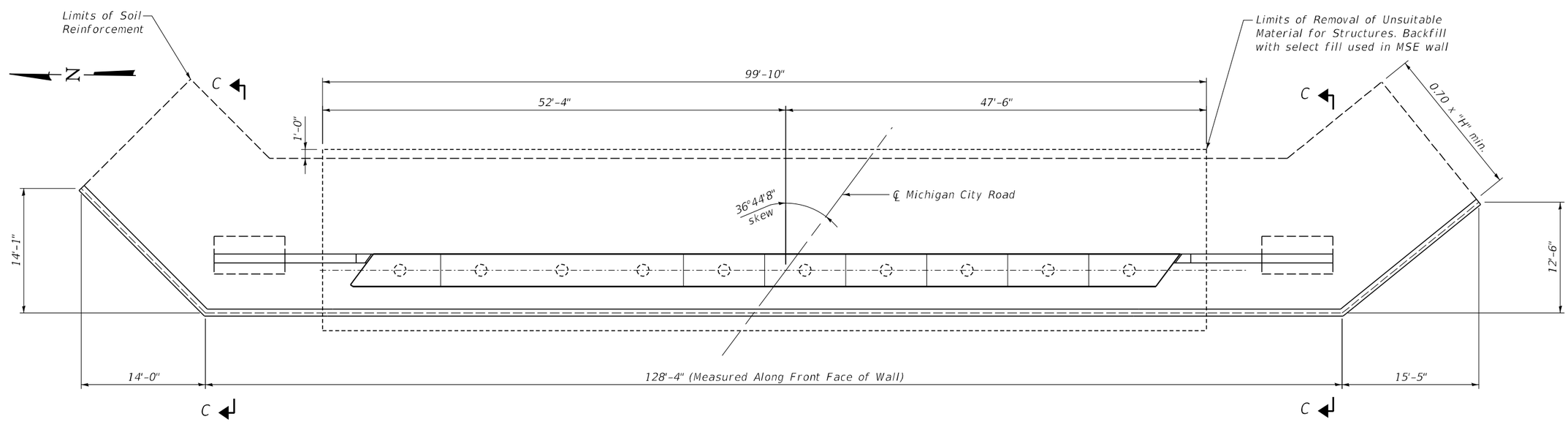

EAST ABUTMENT MSE WALL PLAN

Note:
For section C-C, See sheet S-3.

BILL OF MATERIAL

	Item	Unit	Quantity
	Mechanically Stabilized Earth Retaining Wall	Sq ft	1,937
*	Structure Excavation	Cu. yd.	157

* For location, See S-5 section D.

MODEL: TSL_Plan
FILE NAME: G:\P20720 IDOT D1 PTB 204-001 Michigan City Rd Bridge\03A Design\01 CADD\02 Sheets\Structures\Bridge\016R62-039-MSEwall E.dgn

DELTA ENGINEERING GROUP, LLC
CONSULTING ENGINEERS, STRUCTURE MAINTENANCE, SUPERVISORS
111 W JACKSON BLVD, SUITE 910
CHICAGO, IL 60604
T 312.377.7700, F 312.427.6145

USER NAME = $USER$	DESIGNED - RC	REVISED -
	DRAWN - RM	REVISED -
PLOT SCALE = $SCALE$	CHECKED - SMK	REVISED -
PLOT DATE = 2/25/2025	DATE - 12/13/2024	REVISED -

STATE OF ILLINOIS
DEPARTMENT OF TRANSPORTATION

EAST MSE WALL DETAILS
STRUCTURE NO. 016-8320

SCALE: | SHEET S-39 OF S-50 SHEETS | STA. TO STA.

F.A.I. RTE.	SECTION	COUNTY	TOTAL SHEETS	SHEET NO.
94	FAI 94 22 Structure 2	COOK	157	108
		CONTRACT NO. 62R62		
	ILLINOIS	FED. AID PROJECT		

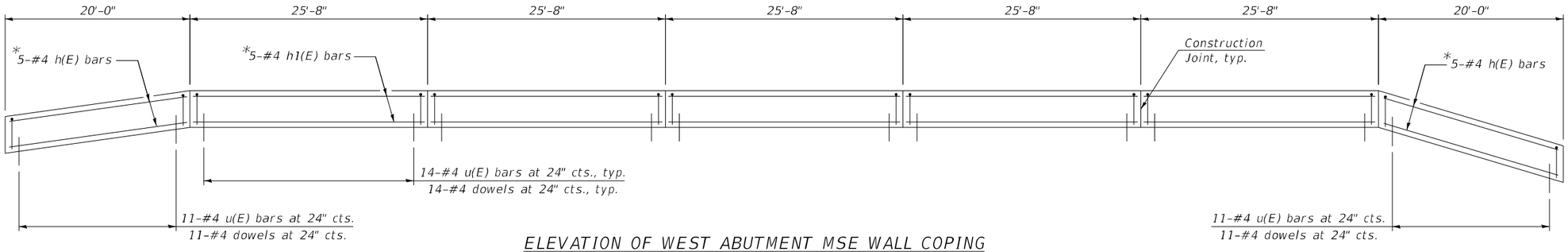

ELEVATION OF WEST ABUTMENT MSE WALL COPING

(Looking West)

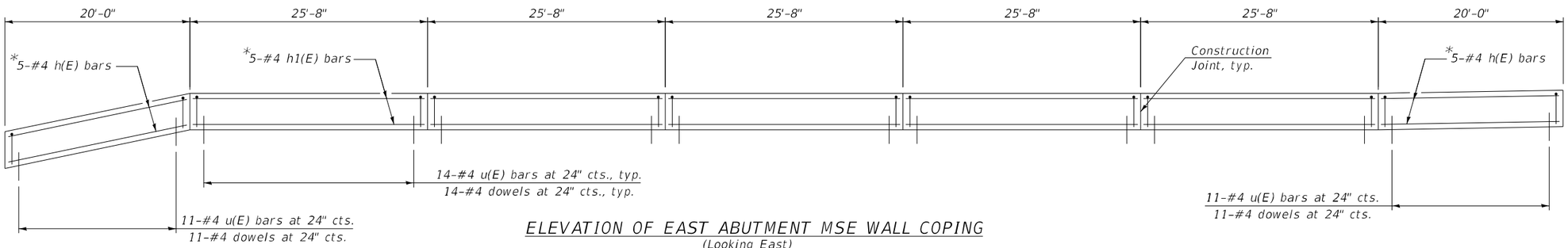

ELEVATION OF EAST ABUTMENT MSE WALL COPING

(Looking East)

* See typical section Abutment Coping

MINIMUM BAR LAPS

#4 = 2'-7"

*BAR LIST

WEST ABUTMENT MSE WALL COPING

Bar	No.	Size	Length	Shape
h(E)	10	#4	19'-6"	
h1(E)	25	#4	25'-4"	
u(E)	92	#4	3'-2"	

* For information only

*BAR LIST

EAST ABUTMENT MSE WALL COPING

Bar	No.	Size	Length	Shape
h(E)	10	#4	19'-6"	
h1(E)	25	#4	25'-4"	
u(E)	92	#4	3'-2"	

* For information only

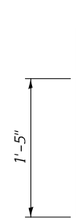

Bar u(E)

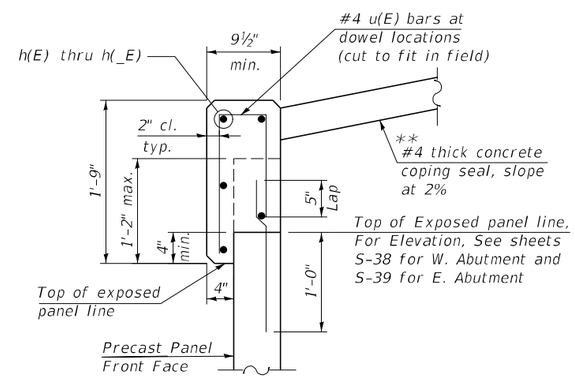

TYPICAL SECTION - COPING

** Use 4" thick concrete coping seal at abutment and wingwall

Note:

For MSE wall cross section, See sheet on S-3 section A-A and section C-C.

Notes:

The cost of coping seal, cast-in-place concrete coping, reinforcement bars and dowel bars are included in cost of " Mechanically Stabilized Earth Retaining Wall".

The contractor may substitute a precast coping at their own expense, the details of which must be included in the shop plans and approved by the engineer.

MODEL: TSI_Plan
FILE NAME: G:\P20720 IDOT D1 PTB 204-001 Michigan City Rd Bridge\03A Design\01 CADD\02 Sheets\Structures\Bridge\016R62-040-MSE_Coping.dgn

DELTA ENGINEERING GROUP, LLC
CONSULTING ENGINEERS, CONSTRUCTION MANAGERS, SURVEYORS
111 W JACKSON BLVD, SUITE 910
CHICAGO, IL 60604
T 312.377.7700, F 312.427.6145

USER NAME = $USER$	DESIGNED - RC	REVISED -	
	DRAWN - RM	REVISED -	
PLOT SCALE = $SCALE$	CHECKED - SMK	REVISED -	
PLOT DATE = 2/25/2025	DATE - 12/13/2024	REVISED -	

STATE OF ILLINOIS
DEPARTMENT OF TRANSPORTATION

MSE WALL COPING DETAILS
STRUCTURE NO. 016-8320

SCALE: | SHEET S-40 OF S-50 SHEETS | STA. | TO STA.

F.A.I. RTE.	SECTION	COUNTY	TOTAL SHEETS	SHEET NO.
94	FAI 94 22 Structure 2	COOK	157	109
		CONTRACT NO. 62R62		
	ILLINOIS	FED. AID PROJECT		

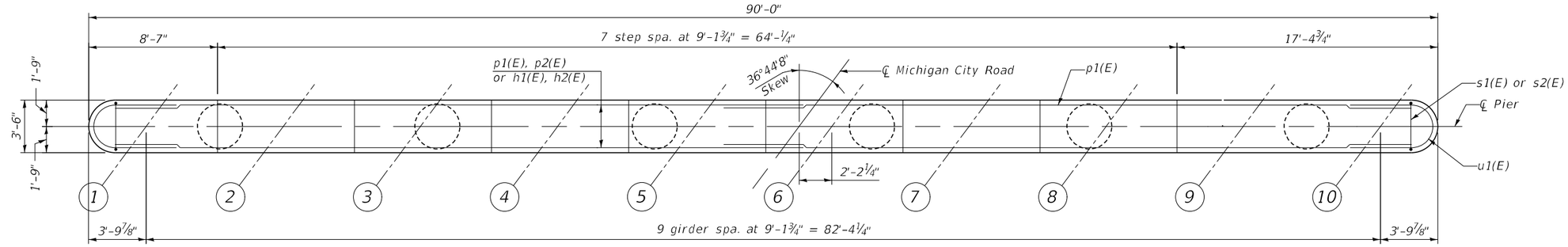

TOP PLAN

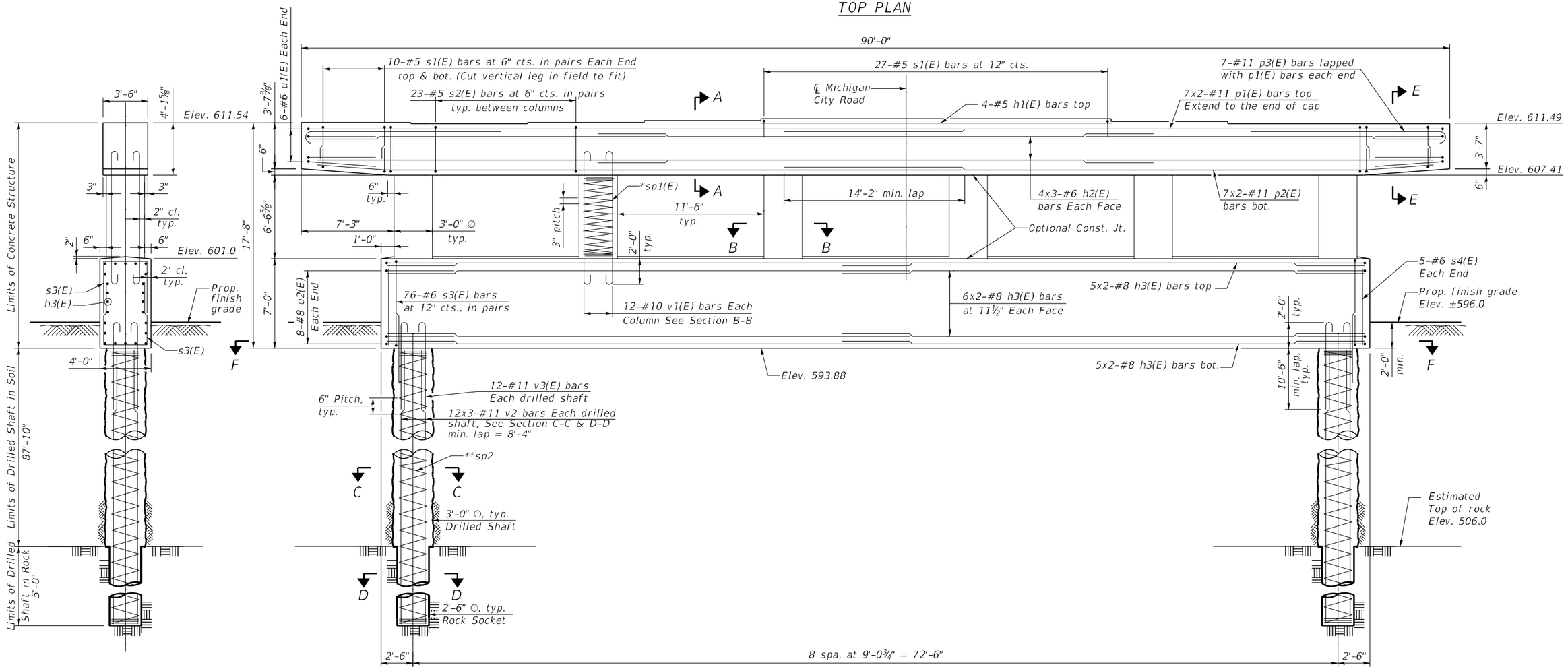

END VIEW

MINIMUM BAR LAP

#5 Bar = 3'-7"
#6 Bar = 4'-4"
#8 Bar = 5'-9"

ELEVATION
(Looking East)

Notes:
1. The quantities and reinforcement detailing are based on the top of shaft and the estimated top of rock elevations shown and may change based on the actual top of rock encountered at each shaft and the final top of shaft elevation.
2. Concrete Sealer shall be applied to all exposed surfaces areas of the pier.

*#5 sp1(E) Spiral each column provide 1½" extra turns top and bottom. Extend spiral 2" into pier cap. Provide 4-#4 spacers or equivalent.
**#5 sp2 Spiral each drilled shaft provide 1½" extra turns extra turns top and bottom. Extend spiral 2" into crash wall. Provide 4-#4 spacers or equivalent.

MODEL: TSL_Plan
FILE NAME: G:\P20220 IDOT D1 PTB 204-001 Michigan City Rd Bridge\03A Design\01 CADD\02 Sheets\Structures\Bridge\0162R62-041-PierDet1.dgn

DELTA ENGINEERING GROUP, LLC
CONSULTING ENGINEERS, LANDSCAPE ARCHITECTS, SURVEYORS
111 W JACKSON BLVD, SUITE 910
CHICAGO, IL 60604
T 312.377.7700, F 312.427.6145

USER NAME = $USER$	DESIGNED - RC	REVISED -	
	DRAWN - RM	REVISED -	
PLOT SCALE = $SCALE$	CHECKED - SMK	REVISED -	
PLOT DATE = 2/25/2025	DATE - 12/13/2024	REVISED -	

STATE OF ILLINOIS
DEPARTMENT OF TRANSPORTATION

PIER DETAILS - 1
STRUCTURE NO. 016-8320

SCALE: | SHEET S-41 OF S-50 SHEETS | STA. | TO STA.

F.A.I. RTE.	SECTION	COUNTY	TOTAL SHEETS	SHEET NO.
94	FAI 94 22 Structure 2	COOK	157	110
		CONTRACT NO. 62R62		
	ILLINOIS	FED. AID PROJECT		

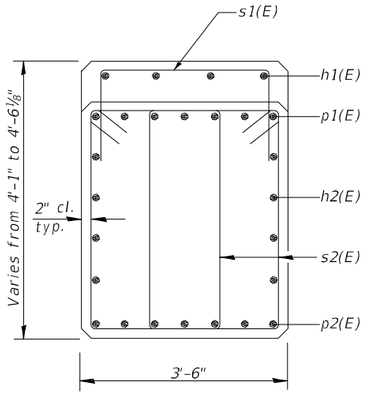

SECTION A-A

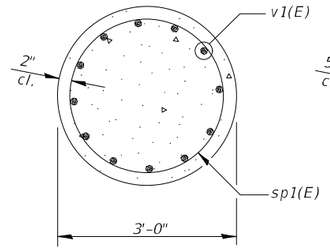

SECTION B-B

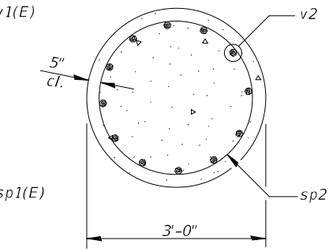

SECTION C-C

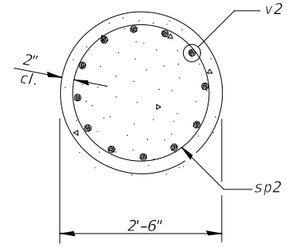

SECTION D-D

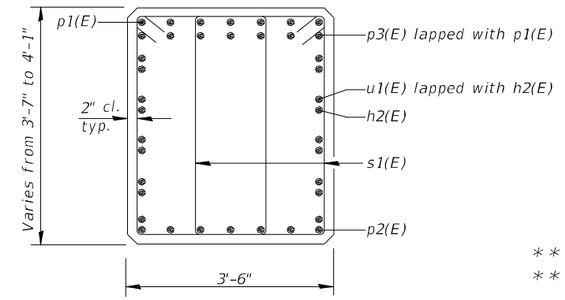

SECTION E-E

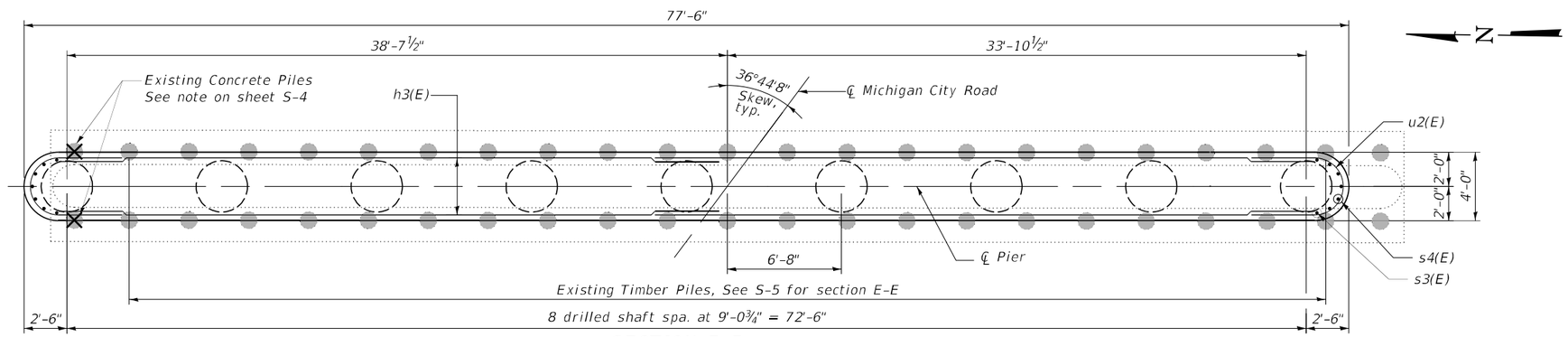

SECTION F-F

BILL OF MATERIAL

	Bar	No.	Size	Length	Shape
	h1(E)	4	#5	24'-6"	
	h2(E)	24	#6	32'-9"	
	h3(E)	22	#8	39'-8"	
	p1(E)	14	#11	51'-11"	
	p2(E)	14	#11	51'-11"	
	p3(E)	14	#11	16'-5"	
	s1(E)	48	#5	10'-4"	
	s2(E)	230	#5	12'-11"	
	s3(E)	152	#6	14'-8"	
	s4(E)	10	#6	6'-8"	
**	sp1(E)	6	#5	6'-9"	
**	sp2	9	#5	93'-0"	
	u1(E)	12	#6	14'-0"	
	u2(E)	16	#8	17'-9"	
	v1(E)	72	#10	13'-5"	
	v2	324	#11	36'-5"	
	v3(E)	108	#11	14'-1"	
	Structure Excavation			Cu. yd.	130
	Concrete Structures			Cu. yd.	136.6
	Reinforcement Bars, Epoxy Coated			Pound	58,250
	Reinforcement Bars			Pound	62,690
	Drilled Shaft in Soil			Cu. yd.	207
	Drilled Shaft in Rock			Cu. yd.	8
*	Temporay Soil Retention System			Sq. ft.	342
	Concrete Sealer			Sq. ft.	2,056

* See sheets S-4 & S-5 for location.
** Length is height of spiral.

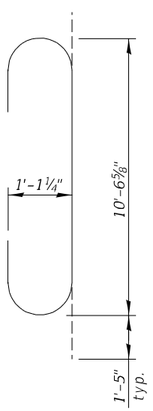

BAR v1(E)

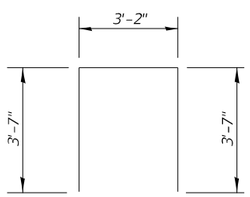

BAR s1(E)

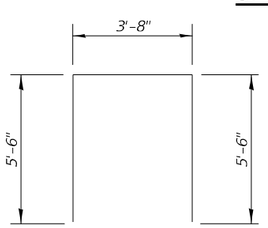

BAR s3(E)

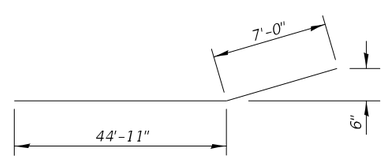

BAR p2(E)

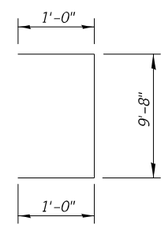

BAR v1(E)

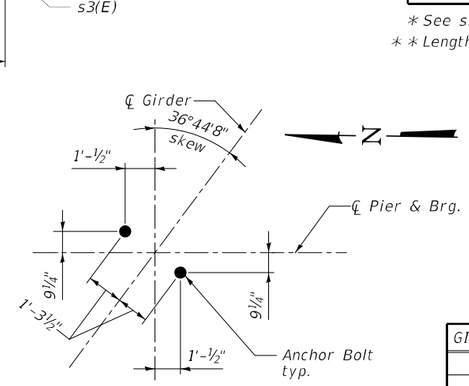

BEARING ANCHOR BOLT LAYOUT DETAILS

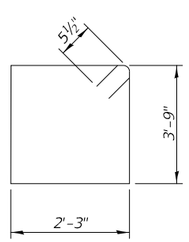

BAR s2(E)

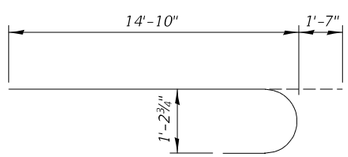

BAR p3(E)

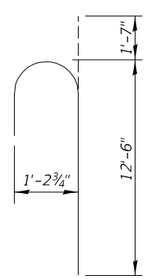

BAR v3(E)

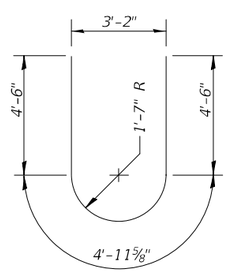

BAR u1(E)

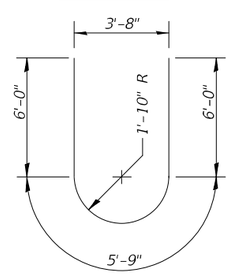

BAR u2(E)

BEARING SEATS

GIRDER #	ELEVATION	STEP HT.
1	611.54	
2	611.45	1⅛"
3	611.56	1¼"
4	611.72	1⅞"
5	611.84	1⅜"
6	611.84	0
7	611.84	
8	611.65	2¼"
9	611.49	1⅞"
10	611.49	

Notes:
Cast steps monolithically with cap.
Space cap reinforcement to miss anchor bolts.
Minimum lap for spirals = 10'-6"

DELTA ENGINEERING GROUP, LLC
CONSULTING ENGINEERS, CONSTRUCTION MANAGERS, ACCESS TOURS
111 W JACKSON BLVD, SUITE 910
CHICAGO, IL 60604
T 312.377.7700, F 312.427.6145

USER NAME = $USER$	DESIGNED - RC	REVISED -	
	DRAWN - RM	REVISED -	
PLOT SCALE = $SCALE$	CHECKED - SMK	REVISED -	
PLOT DATE = 2/25/2025	DATE - 12/13/2024	REVISED -	

STATE OF ILLINOIS
DEPARTMENT OF TRANSPORTATION

PIER DETAILS - 2
STRUCTURE NO. 016-8320

SCALE: | SHEET S-42 OF S-50 SHEETS | STA. | TO STA.

F.A.I. RTE.	SECTION	COUNTY	TOTAL SHEETS	SHEET NO.
94	FAI 94 22 Structure 2	COOK	157	111
		CONTRACT NO. 62R62		
		ILLINOIS	FED. AID PROJECT	

MODEL: TSL_Plan
FILE NAME: G:\P20720 IDOT D1 PTB 204-001 Michigan City Rd Bridge\03A Design\01 CADD\02 Sheets\Structures\Bridge\016R62-043-Pier0e2.dgn

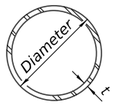

METAL SHELL PILE TABLE

Designation and outside diameter	Wall thickness t	Weight per foot (Lbs./ft.)	Inside volume (yd.³/ft.)
PP12	0.250"	31.40	0.0267
PP14	0.250"	36.75	0.0368
PP14	0.312"	45.65	0.0361
PP16	0.312"	52.32	0.0478
PP16	0.375"	62.64	0.0470

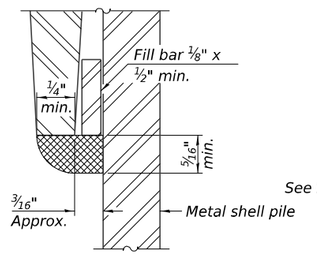

DETAIL A

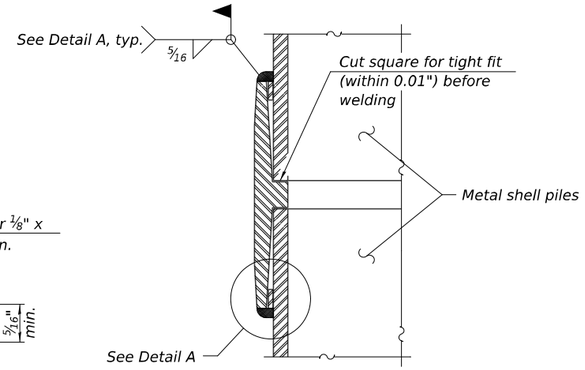

WELDED COMMERCIAL SPLICE

Notes:
The 1/8" x 1/2" min. fill bar may be constructed of 2 bars with a 1/8" max. gap between them.
Pile segments shall be driven to solid contact with splicer before welding.

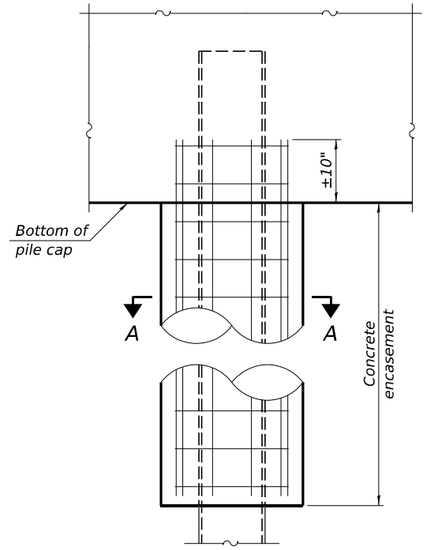

ELEVATION

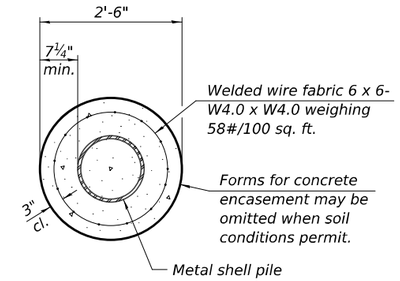

SECTION A-A

INDIVIDUAL PILE CONCRETE ENCASEMENT

(When specified)

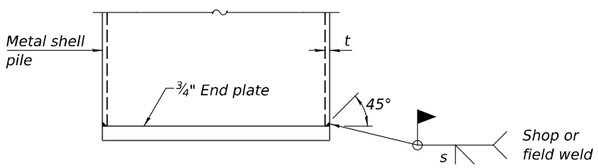

$s = t - \frac{1}{8}"$

END PLATE ATTACHMENT

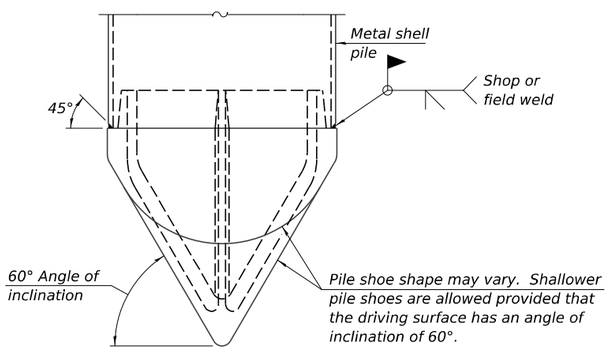

PILE SHOE ATTACHMENT

(When called for on the plans, the Contractor shall furnish metal shell pile shoes consisting of a single piece conical pile point as shown. The pile shoes shall be cast in one piece steel according to either ASTM A 148 Grade 80-50 or AASHTO M 103 Grade 65-35 and shall provide full bearing over the full circumference of the metal shell pile. The pile shoe shall have tapered leads to assure proper alignment and fitting and shall be secured to the pile with a circumferential weld).

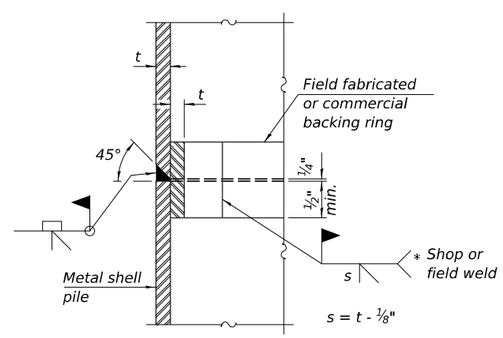

$s = t - \frac{1}{8}"$

COMPLETE PENETRATION WELD SPLICE

* Field fabricated backing ring may be made from pile shell by removing segment to allow reducing circumference and vertically rejoin with partial joint penetration weld.

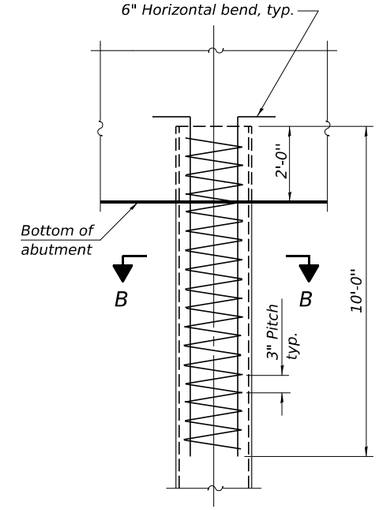

ELEVATION

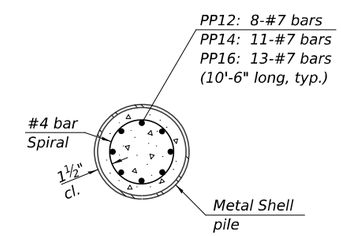

SECTION B-B

REINFORCEMENT AT ABUTMENTS

(Omit when concrete encasement is specified)

Note:
The metal shell piles shall be according to Article 1006.05 of the Standard Specifications.

F-MS 5-15-2023

MODEL: SMODELNAMES
FILE NAME: G:\P20720 IDOT D1 PTB 204-001 Michigan City Rd Bridge\03A Design\01 CADD\02 Sheets\Structures\Bridge\016R62-043-MetalPileDet.dgn

DELTA ENGINEERING GROUP, LLC
CONSULTING ENGINEERS, CONSTRUCTION MANAGERS, ALL STAFF WORK
111 W JACKSON BLVD, SUITE 910
CHICAGO, IL 60604
T 312.377.7700, F 312.427.6145

USER NAME = rmamucod	DESIGNED - RC	REVISED -	STATE OF ILLINOIS DEPARTMENT OF TRANSPORTATION
	DRAWN - RM	REVISED -	
PLOT SCALE = 2:0.0000 ':" / in.	CHECKED - SMK	REVISED -	
PLOT DATE = 12/13/2024	DATE - 12/13/2024	REVISED -	

METAL SHELL PILES DETAILS
STRUCTURE NO. 016-8320

SCALE: | SHEET S-43 OF S-50 SHEETS | STA. | TO STA.

F.A.I. RTE.	SECTION	COUNTY	TOTAL SHEETS	SHEET NO.
94	FAI 94 22 Structure 2	COOK	157	112
		CONTRACT NO. 62R62		
	ILLINOIS	FED. AID PROJECT		

Illinois Department of Transportation
Division of Highways
GSG

SOIL BORING LOG

Page 1 of 3

Date 7/26/23

ROUTE Michigan City Rd DESCRIPTION Bridge Boring LOGGED BY TS

SECTION Michigan City Rd LOCATION , SEC. , TWP. , RNG. ,
Latitude 41.6212571, Longitude -87.5795654

COUNTY COOK DRILLING RIG CME 75 HAMMER TYPE AUTO
DRILLING METHOD HSA HAMMER EFF (%) 79.8

STRUCT. NO.
Station
BORING NO. BSB-01
Station 397+96.00
Offset 8.90ft RT
Ground Surface Elev. 614.00 ft

Surface Water Elev. N/A ft
Stream Bed Elev. N/A ft
Groundwater Elev.:
First Encounter None ft
Upon Completion N/A ft
After N/A Hrs. N/A ft

Description	Elev.	DEPTH (ft)	BLOWS (/6")	UCS Qu (tsf)	MOIST (%)
10 inches of Concrete	613.17				
2 inches of Base	613.00				
Orange Brown, Moist FILL: SAND, trace gravel			11		
			15		7
			13		
			9		
			11		9
		-5	9		
			8		
			14		13
			15		
			8		
			8		9
		-10	6		
Loose to Medium Dense Light Brown, Moist SAND, trace gravel (SP)	603.00		4		
			5		8
			7		
			5		
			5		8
		-15	5		
			10		
			14		12
			16		
			14		
			13		23
		-20	17		
Loose to Medium Dense Light Brown, Moist SAND, trace gravel (SP) *(continued)*			5		
			4		27
			2		
	590.00		3		
Hard Gray, Moist SILTY CLAY, trace gravel (CL/ML)			5	6.0	18
		-25	7	B	
	588.00				
Medium Dense Gray, Moist SILTY LOAM, trace gravel (ML)			5		
			10		23
			6		
	585.50				
Very Stiff to Very Hard Gray, Moist SILTY CLAY, trace gravel (CL)			3		
			4	2.3	10
		-30	5	B	
			4		
			6	4.4	17
		-35	5	R	
			4		
			4	3.0	18
		-40	5	B	

The Unconfined Compressive Strength (UCS) Failure Mode is indicated by (B-Bulge, S-Shear, P-Penetrometer)
The SPT (N value) is the sum of the last two blow values in each sampling zone (AASHTO T206)

BBS, form 137 (Rev. 8-99)

Illinois Department of Transportation
Division of Highways
GSG

SOIL BORING LOG

Page 2 of 3

Date 7/26/23

ROUTE Michigan City Rd DESCRIPTION Bridge Boring LOGGED BY TS

SECTION Michigan City Rd LOCATION , SEC. , TWP. , RNG. ,
Latitude 41.6212571, Longitude -87.5795654

COUNTY COOK DRILLING RIG CME 75 HAMMER TYPE AUTO
DRILLING METHOD HSA HAMMER EFF (%) 79.8

STRUCT. NO.
Station
BORING NO. BSB-01
Station 397+96.00
Offset 8.90ft RT
Ground Surface Elev. 614.00 ft

Surface Water Elev. N/A ft
Stream Bed Elev. N/A ft
Groundwater Elev.:
First Encounter None ft
Upon Completion N/A ft
After N/A Hrs. N/A ft

Description	Elev.	DEPTH (ft)	BLOWS (/6")	UCS Qu (tsf)	MOIST (%)
Very Stiff to Very Hard Gray, Moist SILTY CLAY, trace gravel (CL) *(continued)*					
			3		
			3	3.1	20
		-45	5	B	
			4		
			4	4.2	20
		-50	5	B	
			6		
			9	8.8	16
		-55	11	R	
			9		
			11	10.4	17
		-60	13	B	
Very Stiff to Very Hard Gray, Moist SILTY CLAY, trace gravel (CL) *(continued)*					
			9		
			12	10.2	15
		-65	17	B	
			12		
			17	9.0	12
	544.00	-70	29	B	
Very Dense to Extremely Dense Gray, Moist SILTY LOAM, trace gravel (ML)					
			24		
			26		11
		-75	37		
			50/4"		
					13
		-80			

The Unconfined Compressive Strength (UCS) Failure Mode is indicated by (B-Bulge, S-Shear, P-Penetrometer)
The SPT (N value) is the sum of the last two blow values in each sampling zone (AASHTO T206)

BBS, form 137 (Rev. 8-99)

Illinois Department of Transportation
Division of Highways
GSG

SOIL BORING LOG

Page 3 of 3

Date 7/26/23

ROUTE Michigan City Rd DESCRIPTION Bridge Boring LOGGED BY TS

SECTION Michigan City Rd LOCATION , SEC. , TWP. , RNG. ,
Latitude 41.6212571, Longitude -87.5795654

COUNTY COOK DRILLING RIG CME 75 HAMMER TYPE AUTO
DRILLING METHOD HSA HAMMER EFF (%) 79.8

STRUCT. NO.
Station
BORING NO. BSB-01
Station 397+96.00
Offset 8.90ft RT
Ground Surface Elev. 614.00 ft

Surface Water Elev. N/A ft
Stream Bed Elev. N/A ft
Groundwater Elev.:
First Encounter None ft
Upon Completion N/A ft
After N/A Hrs. N/A ft

Description	Elev.	DEPTH (ft)	BLOWS (/6")	UCS Qu (tsf)	MOIST (%)
Very Dense to Extremely Dense Gray, Moist SILTY LOAM, trace gravel (ML) *(continued)*					
			19		
			39		15
		-85	50/5"		
			50/2"		
		-90			
	520.50				
Very Hard Gray, Moist SILTY CLAY, trace gravel and rock fragments (CL/ML)			10		
			17	9.4	22
		-95	39	R	
			10		
			25	10.8	23
		-100	50/3"	B	
Very Hard Gray, Moist SILTY CLAY, trace gravel and rock fragments (CL/ML) *(continued)*					
	510.50				
Very Dense Gray, Moist SILTY CLAY (CL/ML)			15		
			24	4.5	17
		-105	27	P	
	504.00	-110			
End of Boring					
		-115			
		-120			

The Unconfined Compressive Strength (UCS) Failure Mode is indicated by (B-Bulge, S-Shear, P-Penetrometer)
The SPT (N value) is the sum of the last two blow values in each sampling zone (AASHTO T206)

BBS, form 137 (Rev. 8-99)

MODEL: $MODELNAME$
FILE NAME: G:\P220720 IDOT D1 PTB 204-001 Michigan City Rd Bridge\03A Design\01 CADD\02 Sheets\Structures\Bridge\D1 62R62-04-Boring Logs1.dgn

DELTA ENGINEERING GROUP, LLC
CONSULTING ENGINEERS, CONSTRUCTION MANAGERS, SURVEYORS
111 W JACKSON BLVD. SUITE 910
CHICAGO, IL 60604
T 312.377.7700, F 312.427 6145

USER NAME = rmamucod	DESIGNED - RC	REVISED -	
	DRAWN - RM	REVISED -	
PLOT SCALE = 2:0.0000 ':" / in.	CHECKED - SMK	REVISED -	
PLOT DATE = 12/13/2024	DATE - 12/13/2024	REVISED -	

STATE OF ILLINOIS
DEPARTMENT OF TRANSPORTATION

BORING LOGS - 1
STRUCTURE NO. 016-8320

SCALE: SHEET S-44 OF S-50 SHEETS STA. TO STA.

F.A.I. RTE.	SECTION	COUNTY	TOTAL SHEETS	SHEET NO.
94	FAI 94 22 Structure 2	COOK	157	113
		CONTRACT NO. 62R62		
		ILLINOIS FED. AID PROJECT		

Illinois Department of Transportation
Division of Highways
GSG

SOIL BORING LOG

Date 8/2/23

ROUTE Michigan City Rd DESCRIPTION Bridge Boring LOGGED BY TS

SECTION Michigan City Rd LOCATION , SEC. , TWP. , RNG. ,
Latitude 41.62120421, Longitude -87.57915855

COUNTY COOK DRILLING RIG CME 75 HAMMER TYPE AUTO
DRILLING METHOD HSA HAMMER EFF (%) 79.8

STRUCT. NO.
Station
BORING NO. BSB-02
Station 399+00.00
Offset 42.00ft LT
Ground Surface Elev. 595.00 ft

Surface Water Elev. N/A ft
Stream Bed Elev. N/A ft
Groundwater Elev.:
First Encounter None ft
Upon Completion N/A ft
After N/A Hrs. N/A ft

Description	Elev.	DEPTH (ft)	BLOWS (/6")	UCS Qu (tsf)	MOIST (%)
14 inches of Asphalt	593.83				
Brown, Moist FILL: SAND, trace gravel and organics			3 8 9		25
Loose Brown, Moist SAND, trace gravel (GP)	591.50	-5	2 6 3		26
Hard Gray, Moist SILTY CLAY LOAM, trace gravel (ML/CL)	589.00		4 12 16	4.5 P	17
Medium Dense Gray, Moist SILTY LOAM (ML)	586.50	-10	7 9 8		10
Medium Stiff to Hard Gray, Moist SILTY CLAY, trace gravel (CL/ML)	584.00	-15	3 3 5 1 4 4	0.8 P 4.2 R	19 17
		-20	2 4 5 2 4 5	2.5 B 3.3 B	22 21
Medium Stiff to Hard Gray, Moist SILTY CLAY, trace gravel (CL/ML) *(continued)*	555.00	-40	2 3 5 6 6 3 4 7 3 1 7 6 6 3 6 6 5 7 8	4.4 B 4.0 R 3.3 B 3.1 B 4.0 R 5.4 B	21 21 22 20 18 17

The Unconfined Compressive Strength (UCS) Failure Mode is indicated by (B-Bulge, S-Shear, P-Penetrometer)
The SPT (N value) is the sum of the last two blow values in each sampling zone (AASHTO T206)

BBS, form 137 (Rev. 8-99)

Illinois Department of Transportation
Division of Highways
GSG

SOIL BORING LOG

Date 8/2/23

ROUTE Michigan City Rd DESCRIPTION Bridge Boring LOGGED BY TS

SECTION Michigan City Rd LOCATION , SEC. , TWP. , RNG. ,
Latitude 41.62120421, Longitude -87.57915855

COUNTY COOK DRILLING RIG CME 75 HAMMER TYPE AUTO
DRILLING METHOD HSA HAMMER EFF (%) 79.8

STRUCT. NO.
Station
BORING NO. BSB-02
Station 399+00.00
Offset 42.00ft LT
Ground Surface Elev. 595.00 ft

Surface Water Elev. N/A ft
Stream Bed Elev. N/A ft
Groundwater Elev.:
First Encounter None ft
Upon Completion N/A ft
After N/A Hrs. N/A ft

Description	Elev.	DEPTH (ft)	BLOWS (/6")	UCS Qu (tsf)	MOIST (%)
Hard to Very Hard Gray, Moist SILTY CLAY, trace gravel (CL)			8 12 15	9.6 B	15
Very Dense Gray, Moist SILTY LOAM (ML) *(continued)*	530.00	-45	15 17 17	4.5 P	12
Hard Gray, Moist SILTY CLAY, trace gravel (CL/ML)		-50	19 19 23	4.5 P	13
Very Dense Gray, Moist SILTY LOAM (ML)	536.50	-60	24 36 44		14
Very Dense Gray, Moist SILTY LOAM (ML) *(continued)*			25 32 36		17
Hard Gray, Moist SILTY CLAY, trace gravel (CL/ML)	510.00	-65	45 50/3"	4.5 P	11

The Unconfined Compressive Strength (UCS) Failure Mode is indicated by (B-Bulge, S-Shear, P-Penetrometer)
The SPT (N value) is the sum of the last two blow values in each sampling zone (AASHTO T206)

BBS, form 137 (Rev. 8-99)

Illinois Department of Transportation
Division of Highways
GSG

SOIL BORING LOG

Date 8/2/23

ROUTE Michigan City Rd DESCRIPTION Bridge Boring LOGGED BY TS

SECTION Michigan City Rd LOCATION , SEC. , TWP. , RNG. ,
Latitude 41.62120421, Longitude -87.57915855

COUNTY COOK DRILLING RIG CME 75 HAMMER TYPE AUTO
DRILLING METHOD HSA HAMMER EFF (%) 79.8

STRUCT. NO.
Station
BORING NO. BSB-02
Station 399+00.00
Offset 42.00ft LT
Ground Surface Elev. 595.00 ft

Surface Water Elev. N/A ft
Stream Bed Elev. N/A ft
Groundwater Elev.:
First Encounter None ft
Upon Completion N/A ft
After N/A Hrs. N/A ft

Description	Elev.	DEPTH (ft)	BLOWS (/6")	UCS Qu (tsf)	MOIST (%)
Hard Gray, Moist SILTY CLAY, trace gravel (CL/ML) *(continued)*			50/4"		19
HIGHLY WEATHERED BEDROCK	510.00	-85			
Auger Refusal at 93.5 feet End of Boring	501.50	-90			
		-95			
		-100			

The Unconfined Compressive Strength (UCS) Failure Mode is indicated by (B-Bulge, S-Shear, P-Penetrometer)
The SPT (N value) is the sum of the last two blow values in each sampling zone (AASHTO T206)

BBS, form 137 (Rev. 8-99)

MODEL: $MODELNAME$
FILE NAME: G:\LP20720 IDOT D1 PTB 204-001 Michigan City Rd Bridge\03A Design\01 CADD\02 Sheet\Structures\Bridge\D162R62-2-5-Boring Logs2.dgn

DELTA ENGINEERING GROUP, LLC
CONSULTING ENGINEERS, CONSTRUCTION MANAGERS, SURVEYORS
111 W JACKSON BLVD. SUITE 910
CHICAGO, IL 60604
T 312.377.7700, F 312.427 6145

USER NAME = rmamucod	DESIGNED - RC	REVISED -	
	DRAWN - RM	REVISED -	
PLOT SCALE = 2:0.0000 ':" / in.	CHECKED - SMK	REVISED -	
PLOT DATE = 12/13/2024	DATE - 12/13/2024	REVISED -	

STATE OF ILLINOIS
DEPARTMENT OF TRANSPORTATION

BORING LOGS - 2
STRUCTURE NO. 016-8320

SCALE: SHEET S-45 OF S-50 SHEETS STA. TO STA.

F.A.I. RTE.	SECTION	COUNTY	TOTAL SHEETS	SHEET NO.
94	FAI 94 22 Structure 2	COOK	157	114

CONTRACT NO. 62R62
ILLINOIS FED. AID PROJECT

Illinois Department of Transportation
Division of Highways
GSG

SOIL BORING LOG

Date 7/26/23

ROUTE Michigan City Rd DESCRIPTION Bridge Boring LOGGED BY EH

SECTION Michigan City Rd LOCATION , SEC. , TWP. , RNG. ,
Latitude 41.620749, Longitude -87.578908

COUNTY COOK DRILLING RIG Mobile B57 HAMMER TYPE AUTO
DRILLING METHOD HSA HAMMER EFF (%) 89.0

STRUCT. NO.
Station
BORING NO. BSB-03
Station 400+48.00
Offset 51.00ft RT
Ground Surface Elev. 596.00 ft

Surface Water Elev. N/A ft
Stream Bed Elev. N/A ft

Groundwater Elev.:
First Encounter None ft
Upon Completion N/A ft
After N/A Hrs. N/A ft

Description	Elev.	DEPTH (ft)	BLOWS (/6")	UCS Qu (tsf)	MOIST (%)
5 inches of Asphalt	595.58				
10 inches of Reinforced Concrete	594.75				
Brown, Moist FILL: SAND (SP)			7 9 11	13	
Medium Dense Brown, Moist SAND, trace gravel (SP)	592.50	-5	5 9 7	28	
Stiff to Hard Gray, Moist SILTY CLAY, trace gravel (CL/ML)	590.00	-10	2 2 3 4 10	2.5 B 2.0 B	22 23
		-15	5 5 6 2 4 6	2.9 B 2.9 R	22 22
		-20	2 4 4 3 4 6	2.5 B 3.3 B	14 21
Stiff to Hard Gray, Moist SILTY CLAY, trace gravel (CL/ML) *(continued)*		-25	3 4 5	2.9 B	21
		-30	3 3 7	2.5 B	22
		-35	2 2 3	1.7 B	22
		-40	1 2 5 3 5 8	1.7 R 3.3 B	21 19

The Unconfined Compressive Strength (UCS) Failure Mode is indicated by (B-Bulge, S-Shear, P-Penetrometer)
The SPT (N value) is the sum of the last two blow values in each sampling zone (AASHTO T206)

BBS, form 137 (Rev. 8-99)

Illinois Department of Transportation
Division of Highways
GSG

SOIL BORING LOG

Date 7/26/23

ROUTE Michigan City Rd DESCRIPTION Bridge Boring LOGGED BY EH

SECTION Michigan City Rd LOCATION , SEC. , TWP. , RNG. ,
Latitude 41.620749, Longitude -87.578908

COUNTY COOK DRILLING RIG Mobile B57 HAMMER TYPE AUTO
DRILLING METHOD HSA HAMMER EFF (%) 89.0

STRUCT. NO.
Station
BORING NO. BSB-03
Station 400+48.00
Offset 51.00ft RT
Ground Surface Elev. 596.00 ft

Surface Water Elev. N/A ft
Stream Bed Elev. N/A ft

Groundwater Elev.:
First Encounter None ft
Upon Completion N/A ft
After N/A Hrs. N/A ft

Description	Elev.	DEPTH (ft)	BLOWS (/6")	UCS Qu (tsf)	MOIST (%)
Stiff to Hard Gray, Moist SILTY CLAY, trace gravel (CL/ML) *(continued)*			3		
		-45	6 11 10	5.0 R	20
Hard to Very Hard Gray, Moist SILTY CLAY, trace gravel (CL/ML)	547.50	-50	11 10 15	8.3 B	12
		-55	21 21 22	6.3 R	14
Cobbles at 58.8 to 60 feet		-60	50/5.5"	4.5 P	16
Hard to Very Hard Gray, Moist SILTY CLAY, trace gravel (CL/ML) *(continued)*		-65	15 16 27	10.4 R	16
		-70	18 24 37	8.3 B	17
Rock fragments at 74.5 feet		-75	38 29 50/3"	7.5 R	11
		-80			

The Unconfined Compressive Strength (UCS) Failure Mode is indicated by (B-Bulge, S-Shear, P-Penetrometer)
The SPT (N value) is the sum of the last two blow values in each sampling zone (AASHTO T206)

BBS, form 137 (Rev. 8-99)

Illinois Department of Transportation
Division of Highways
GSG

SOIL BORING LOG

Date 7/26/23

ROUTE Michigan City Rd DESCRIPTION Bridge Boring LOGGED BY EH

SECTION Michigan City Rd LOCATION , SEC. , TWP. , RNG. ,
Latitude 41.620749, Longitude -87.578908

COUNTY COOK DRILLING RIG Mobile B57 HAMMER TYPE AUTO
DRILLING METHOD HSA HAMMER EFF (%) 89.0

STRUCT. NO.
Station
BORING NO. BSB-03
Station 400+48.00
Offset 51.00ft RT
Ground Surface Elev. 596.00 ft

Surface Water Elev. N/A ft
Stream Bed Elev. N/A ft

Groundwater Elev.:
First Encounter None ft
Upon Completion N/A ft
After N/A Hrs. N/A ft

Description	Elev.	DEPTH (ft)	BLOWS (/6")	UCS Qu (tsf)	MOIST (%)
Hard to Very Hard Gray, Moist SILTY CLAY, trace gravel (CL/ML) *(continued)*		-85	25 28 50	6.3 R	15
HIGHLY WEATHERED BEDROCK	506.00	-90	50/1"		
Auger Refusal at 97 feet End of Boring	499.00	-100			

The Unconfined Compressive Strength (UCS) Failure Mode is indicated by (B-Bulge, S-Shear, P-Penetrometer)
The SPT (N value) is the sum of the last two blow values in each sampling zone (AASHTO T206)

BBS, form 137 (Rev. 8-99)

MODEL: $MODELNAME$
FILE NAME: G:\P220720 IDOT D1 PTB 204-001 Michigan City Rd Bridge\03A Design\01 CADD\02 Sheets\Structures\Bridge\D1 62R62-04-6-Boring Logs3.dgn

DELTA ENGINEERING GROUP, LLC
CONSULTING ENGINEERS, CONSTRUCTION MANAGERS, SURVEYORS
111 W JACKSON BLVD. SUITE 910
CHICAGO, IL 60604
T 312.377.7700, F 312.427 6145

USER NAME = rmamucod	DESIGNED - RC	REVISED -	
	DRAWN - RM	REVISED -	
PLOT SCALE = 2:0.0000 ':" / in.	CHECKED - SMK	REVISED -	
PLOT DATE = 12/13/2024	DATE - 12/13/2024	REVISED -	

STATE OF ILLINOIS
DEPARTMENT OF TRANSPORTATION

BORING LOGS - 3
STRUCTURE NO. 016-8320

SCALE: SHEET S-46 OF S-50 SHEETS STA. TO STA.

F.A.I. RTE.	SECTION	COUNTY	TOTAL SHEETS	SHEET NO.
94	FAI 94 22 Structure 2	COOK	157	115
		CONTRACT NO. 62R62		
		ILLINOIS FED. AID PROJECT		

Illinois Department of Transportation
Division of Highways
GSG

SOIL BORING LOG

Date 7/24/23

ROUTE Michigan City Rd DESCRIPTION Bridge Boring LOGGED BY EH

SECTION Michigan City Rd LOCATION , SEC. , TWP. , RNG. ,
Latitude 41.62109073, Longitude -87.57894435

COUNTY COOK DRILLING RIG Mobile B57 HAMMER TYPE AUTO
DRILLING METHOD HSA HAMMER EFF (%) 89.0

STRUCT. NO.
Station
BORING NO. BSB-04
Station 399+69.68
Offset 43.00ft LT
Ground Surface Elev. 596.00 ft

Surface Water Elev. N/A ft
Stream Bed Elev. N/A ft
Groundwater Elev.:
First Encounter None ft
Upon Completion N/A ft
After N/A Hrs. N/A ft

Description	Elev.	DEPTH (ft)	BLOWS (/6")	UCS Qu (tsf)	MOIST (%)
3 inches of Asphalt	595.75				
9 inches of Concrete	595.00				
Brown, Wet FILL: SAND			7 5 9		26
	592.50				
Medium Dense Brown, Moist SAND, trace gravel (SP)		-5	3 9 10		25
	590.00				
Medium Dense Gray, Moist to Very Moist SILTY LOAM (ML)			7 7 9		23
			6		
		-10	12 14		19
	585.00				
Very Stiff to Hard Gray, Moist SILTY CLAY, trace gravel (CL)			4 3 5	2.9 B	24
			2		
		-15	4 4	2.1 R	22
			3		
			3 4	2.9 B	23
			2		
		-20	3 4	2.5 B	23
Very Stiff to Hard Gray, Moist SILTY CLAY, trace gravel (CL) *(continued)*			2 4 5	2.5 B	21
			3		
		-25	4 6	2.5 R	20
			3		
			5 5	2.5 B	19
			3		
		-30	3 5	2.0 B	22
			4		
		-35	6 10	4.2 R	16
	558.00				
Very Hard Gray, Moist SILTY CLAY, trace gravel (CL/ML)			6		
		-40	8 10	6.3 B	15

The Unconfined Compressive Strength (UCS) Failure Mode is indicated by (B-Bulge, S-Shear, P-Penetrometer)
The SPT (N value) is the sum of the last two blow values in each sampling zone (AASHTO T206)

BBS, form 137 (Rev. 8-99)

Illinois Department of Transportation
Division of Highways
GSG

SOIL BORING LOG

Date 7/24/23

ROUTE Michigan City Rd DESCRIPTION Bridge Boring LOGGED BY EH

SECTION Michigan City Rd LOCATION , SEC. , TWP. , RNG. ,
Latitude 41.62109073, Longitude -87.57894435

COUNTY COOK DRILLING RIG Mobile B57 HAMMER TYPE AUTO
DRILLING METHOD HSA HAMMER EFF (%) 89.0

STRUCT. NO.
Station
BORING NO. BSB-04
Station 399+69.68
Offset 43.00ft LT
Ground Surface Elev. 596.00 ft

Surface Water Elev. N/A ft
Stream Bed Elev. N/A ft
Groundwater Elev.:
First Encounter None ft
Upon Completion N/A ft
After N/A Hrs. N/A ft

Description	Elev.	DEPTH (ft)	BLOWS (/6")	UCS Qu (tsf)	MOIST (%)
Very Hard Gray, Moist SILTY CLAY, trace gravel (CL/ML) *(continued)*			8		
		-45	9 13	6.3 B	13
			8		
		-50	8 8	6.3 B	13
			15		
		-55	50/5.5"	10.4 R	17
	537.50				
Extremely Dense Gray, Moist SILTY LOAM, trace gravel (ML)		-60	48 50/4"		13
Extremely Dense Gray, Moist SILTY LOAM, trace gravel (ML) *(continued)*			24		
		-65	36 50/5"		16
	527.50				
Hard Gray, Moist SILTY CLAY (CL/ML)		-70	13 11 50/5"	6.3 B	17
	522.50				
Extremely Dense Gray, Very Moist SILTY LOAM, trace gravel (ML)		-75	50/3"		
	517.50				
Hard Gray, Moist SILTY CLAY (CL/ML)	516.00	-80	13 34 30	6.3 B	20
End of Boring					

The Unconfined Compressive Strength (UCS) Failure Mode is indicated by (B-Bulge, S-Shear, P-Penetrometer)
The SPT (N value) is the sum of the last two blow values in each sampling zone (AASHTO T206)

BBS, form 137 (Rev. 8-99)

MODEL: $MODELNAME$
FILE NAME: G:\P20720 IDOT D1 PTB 204-001 Michigan City Rd Bridge\03A Design\01 CADD\02 Sheet\Structures\Bridge\D162R62-2-47-Boring Logs4.dgn

DELTA ENGINEERING GROUP, LLC
CONSULTING ENGINEERS, CONSTRUCTION MANAGERS, SURVEYORS
111 W JACKSON BLVD. SUITE 910
CHICAGO, IL 60604
T 312.377.7700, F 312.427 6145

USER NAME = rmamucod	DESIGNED - RC	REVISED -	
	DRAWN - RM	REVISED -	
PLOT SCALE = 2:0.0000 ':" / in.	CHECKED - SMK	REVISED -	
PLOT DATE = 12/13/2024	DATE - 12/13/2024	REVISED -	

STATE OF ILLINOIS
DEPARTMENT OF TRANSPORTATION

BORING LOGS - 4
STRUCTURE NO. 016-8320

SCALE: SHEET S-47 OF S-50 SHEETS STA. TO STA.

F.A.I. RTE.	SECTION	COUNTY	TOTAL SHEETS	SHEET NO.
94	FAI 94 22 Structure 2	COOK	157	116

CONTRACT NO. 62R62
ILLINOIS FED. AID PROJECT

Illinois Department of Transportation
Division of Highways
GSG

SOIL BORING LOG

Date 7/23/23

ROUTE Michigan City Rd DESCRIPTION Bridge Boring LOGGED BY EH

SECTION Michigan City Rd LOCATION , SEC. , TWP. , RNG. ,
Latitude 41.62070743, Longitude -87.57876953

COUNTY COOK DRILLING RIG Mobile B57 HAMMER TYPE AUTO
DRILLING METHOD HSA HAMMER EFF (%) 89.0

STRUCT. NO.
Station

BORING NO. BSB-05
Station 400+90.70
Offset 40.00ft RT
Ground Surface Elev. 595.00 ft

Surface Water Elev. N/A ft
Stream Bed Elev. N/A ft

Groundwater Elev.:
First Encounter None ft
Upon Completion N/A ft
After N/A Hrs. N/A ft

Description	Elev.	DEPTH (ft)	BLOWS (/6")	UCS Qu (tsf)	MOIST (%)
15 inches of Asphalt	593.75				
Brown, Wet FILL: SAND			4 9 11		24
	591.50				
Medium Dense Brown, Moist SAND, trace gravel (SP)		-5	5 9 10		32
	589.00				
Medium Dense to Dense Gray, Moist SILT LOAM (ML)			7 15 19		20
	586.50				
Very Stiff to Hard Gray, Moist SILTY CLAY (CL/ML)		-10	9 9 7	4.2 B	20
		-15	4 4 8 4 5 5	5.2 B 4.2 R	20 20
		-20	3 4 5 4 5 6	2.5 B 2.5 B	20 20
Very Stiff to Hard Gray, Moist SILTY CLAY (CL/ML) *(continued)*		-25	3 4 6 5 7	2.5 B 2.5 R	22 18
		-30	2 3 5 6 6	2.0 B 2.1 B	22 21
		-35	4 5 7	2.1 R	20
		-40	4 5 9	2.1 B	18

The Unconfined Compressive Strength (UCS) Failure Mode is indicated by (B-Bulge, S-Shear, P-Penetrometer)
The SPT (N value) is the sum of the last two blow values in each sampling zone (AASHTO T206)

BBS, form 137 (Rev. 8-99)

Illinois Department of Transportation
Division of Highways
GSG

SOIL BORING LOG

Date 7/23/23

ROUTE Michigan City Rd DESCRIPTION Bridge Boring LOGGED BY EH

SECTION Michigan City Rd LOCATION , SEC. , TWP. , RNG. ,
Latitude 41.62070743, Longitude -87.57876953

COUNTY COOK DRILLING RIG Mobile B57 HAMMER TYPE AUTO
DRILLING METHOD HSA HAMMER EFF (%) 89.0

STRUCT. NO.
Station

BORING NO. BSB-05
Station 400+90.70
Offset 40.00ft RT
Ground Surface Elev. 595.00 ft

Surface Water Elev. N/A ft
Stream Bed Elev. N/A ft

Groundwater Elev.:
First Encounter None ft
Upon Completion N/A ft
After N/A Hrs. N/A ft

Description	Elev.	DEPTH (ft)	BLOWS (/6")	UCS Qu (tsf)	MOIST (%)
Very Stiff to Hard Gray, Moist SILTY CLAY (CL/ML) *(continued)*		-45	3 6 9	4.2 R	19
	547.00				
Hard Gray, Moist SILTY CLAY (CL/ML)		-50	11 11 15	5.8 B	12
		-55	15 23 26	7.5 R	13
	535.00	-60	18 30 40	6.3 B	13

End of Boring

The Unconfined Compressive Strength (UCS) Failure Mode is indicated by (B-Bulge, S-Shear, P-Penetrometer)
The SPT (N value) is the sum of the last two blow values in each sampling zone (AASHTO T206)

BBS, form 137 (Rev. 8-99)

MODEL: $MODELNAME$
FILE NAME: G:\LP220720 IDOT D1 PTB 204-001 Michigan City Rd Bridge\03A Design\01 CADD\02 Sheet\Structures\Bridge\D162R62-24-B-Boring Logs5.dgn

DELTA ENGINEERING GROUP, LLC
CONSULTING ENGINEERS, CONSTRUCTION MANAGERS, SURVEYORS
111 W JACKSON BLVD. SUITE 910
CHICAGO, IL 60604
T 312.377.7700, F 312.427 6145

USER NAME = rmamucod	DESIGNED - RC	REVISED -	
	DRAWN - RM	REVISED -	
PLOT SCALE = 2:0.0000 ':" / in.	CHECKED - SMK	REVISED -	
PLOT DATE = 12/13/2024	DATE - 12/13/2024	REVISED -	

STATE OF ILLINOIS
DEPARTMENT OF TRANSPORTATION

BORING LOGS - 5
STRUCTURE NO. 016-8320

SCALE: SHEET S-48 OF S-50 SHEETS STA. TO STA.

F.A.I. RTE.	SECTION	COUNTY	TOTAL SHEETS	SHEET NO.
94	FAI 94 22 Structure 2	COOK	157	117
		CONTRACT NO. 62R62		
		ILLINOIS FED. AID PROJECT		

Illinois Department of Transportation
Division of Highways
GSG

SOIL BORING LOG

Date 7/31/23

ROUTE Michigan City Rd DESCRIPTION Bridge Boring LOGGED BY DV/EH

SECTION Michigan City Rd LOCATION , SEC. , TWP. , RNG. ,
Latitude 41.6206242, Longitude -87.5784571

COUNTY COOK DRILLING RIG D-50 ATV HAMMER TYPE AUTO
DRILLING METHOD HSA HAMMER EFF (%) 91.5

STRUCT. NO.
Station
BORING NO. BSB-06
Station 401+77.00
Offset 14.60ft RT
Ground Surface Elev. 614.00 ft

Surface Water Elev. N/A ft
Stream Bed Elev. N/A ft
Groundwater Elev.:
First Encounter 595.5 ft ▼
Upon Completion N/A ft
After N/A Hrs. N/A ft

Description	Elev.	DEPTH (ft)	BLOWS (/6")	UCS Qu (tsf)	MOIST (%)
10 inches of Concrete	613.17				
Brown and Gray, Moist FILL: SAND, trace gravel, asphalt, and concrete fragments			9 9 8		7
	609.50		5 4 4		20
Dark Gray and Brown, Moist FILL: SAND, with clay, trace gravel and concrete fragments	608.00	-5			
Dark Brown, Moist FILL: SAND, trace gravel			7 14 15		9
			5 3 2		9
		-10			
			2 1 1		10
			1 1 2		8
	599.00	-15			
Loose to Medium Dense Light Brown, Moist SAND, trace gravel (SP)			11 14 17		14
		▼	9 18 18		25
		-20			

Description	Elev.	DEPTH (ft)	BLOWS (/6")	UCS Qu (tsf)	MOIST (%)
Loose to Medium Dense Light Brown, Moist SAND, trace gravel (SP) *(continued)*	592.50		5		
Stiff to Very Stiff Gray, Moist SILTY CLAY, trace sand (CL)			4 4	1.5 B	20
			2 2 4	2.5 R	23
		-25			
			4		
			6 12	3.8 B	22
			4		
			7 8	3.5 B	20
		-30			
			3		
			6 7	2.5 R	22
		-35			
			3		
			4 6	3.1 B	21
		-40			

The Unconfined Compressive Strength (UCS) Failure Mode is indicated by (B-Bulge, S-Shear, P-Penetrometer)
The SPT (N value) is the sum of the last two blow values in each sampling zone (AASHTO T206)

BBS, form 137 (Rev. 8-99)

Illinois Department of Transportation
Division of Highways
GSG

SOIL BORING LOG

Date 7/31/23

ROUTE Michigan City Rd DESCRIPTION Bridge Boring LOGGED BY DV/EH

SECTION Michigan City Rd LOCATION , SEC. , TWP. , RNG. ,
Latitude 41.6206242, Longitude -87.5784571

COUNTY COOK DRILLING RIG D-50 ATV HAMMER TYPE AUTO
DRILLING METHOD HSA HAMMER EFF (%) 91.5

STRUCT. NO.
Station
BORING NO. BSB-06
Station 401+77.00
Offset 14.60ft RT
Ground Surface Elev. 614.00 ft

Surface Water Elev. N/A ft
Stream Bed Elev. N/A ft
Groundwater Elev.:
First Encounter 595.5 ft ▼
Upon Completion N/A ft
After N/A Hrs. N/A ft

Description	Elev.	DEPTH (ft)	BLOWS (/6")	UCS Qu (tsf)	MOIST (%)
Stiff to Very Stiff Gray, Moist SILTY CLAY, trace sand (CL) *(continued)*	570.50				
Stiff Gray, Moist SANDY CLAY, with silt, trace gravel (SC)			2 5 7	1.3 P	15
		-45			
	565.50				
Very Stiff to Hard SILTY CLAY, trace gravel (CL/ML)			3 6 9	3.5 B	18
		-50			
			5 8 12	5.2 R	16
		-55			
			7 11 15	6.0 B	10
		-60			

Description	Elev.	DEPTH (ft)	BLOWS (/6")	UCS Qu (tsf)	MOIST (%)
Very Stiff to Hard SILTY CLAY, trace gravel (CL/ML) *(continued)*					
			9		
			18 25	3.3 B	19
		-65			
	545.50				
Hard Gray, Moist SILTY CLAY LOAM, trace gravel (ML/CL)			15 21 32	6.7 B	14
		-70			
	540.50				
Hard Gray, Moist SILTY CLAY, trace gravel (CL/ML)			20 34 50/4"	7.9 R	14
		-75			
	535.50				
Very Stiff to Hard Gray, Moist SILTY CLAY, with gravel (CL/ML)			50/5"	3.3 B	12
		-80			

The Unconfined Compressive Strength (UCS) Failure Mode is indicated by (B-Bulge, S-Shear, P-Penetrometer)
The SPT (N value) is the sum of the last two blow values in each sampling zone (AASHTO T206)

BBS, form 137 (Rev. 8-99)

Illinois Department of Transportation
Division of Highways
GSG

SOIL BORING LOG

Date 7/31/23

ROUTE Michigan City Rd DESCRIPTION Bridge Boring LOGGED BY DV/EH

SECTION Michigan City Rd LOCATION , SEC. , TWP. , RNG. ,
Latitude 41.6206242, Longitude -87.5784571

COUNTY COOK DRILLING RIG D-50 ATV HAMMER TYPE AUTO
DRILLING METHOD HSA HAMMER EFF (%) 91.5

STRUCT. NO.
Station
BORING NO. BSB-06
Station 401+77.00
Offset 14.60ft RT
Ground Surface Elev. 614.00 ft

Surface Water Elev. N/A ft
Stream Bed Elev. N/A ft
Groundwater Elev.:
First Encounter 595.5 ft ▼
Upon Completion N/A ft
After N/A Hrs. N/A ft

Description	Elev.	DEPTH (ft)	BLOWS (/6")	UCS Qu (tsf)	MOIST (%)
Very Stiff to Hard Gray, Moist SILTY CLAY, with gravel (CL/ML) *(continued)*					
		-85			
			50/3"		8
		-90			
		-95			
	515.50				
			50/4"		12
		-100			

Description	Elev.	DEPTH (ft)	BLOWS (/6")	UCS Qu (tsf)	MOIST (%)
Extremely Dense Gray, Moist SILTY LOAM, with rock fragments (ML) *(continued)*					
		-105			
	508.00				
HIGHLY WEATHERED BEDROCK - Gray - Moist					
Auger Refusal at 108.5 feet	505.50				
End of Boring		-110			
		-115			
		-120			

The Unconfined Compressive Strength (UCS) Failure Mode is indicated by (B-Bulge, S-Shear, P-Penetrometer)
The SPT (N value) is the sum of the last two blow values in each sampling zone (AASHTO T206)

BBS, form 137 (Rev. 8-99)

MODEL: $MODELNAME$
FILE NAME: G:\P220720 IDOT D1 PTB 204-001 Michigan City Rd Bridge\03A Design\01 CADD\02 Sheets\Structures\Bridge\D162R62-2-9-Boring Logs6.dgn

DELTA ENGINEERING GROUP, LLC
CONSULTING ENGINEERS, CONSTRUCTION MANAGERS, SURVEYORS
111 W JACKSON BLVD. SUITE 910
CHICAGO, IL 60604
T 312.377.7700, F 312.427 6145

USER NAME = rmamucod	DESIGNED - RC	REVISED -	
	DRAWN - RM	REVISED -	
PLOT SCALE = 2:0.0000 ':" / in.	CHECKED - SMK	REVISED -	
PLOT DATE = 12/13/2024	DATE - 12/13/2024	REVISED -	

STATE OF ILLINOIS
DEPARTMENT OF TRANSPORTATION

BORING LOGS - 6
STRUCTURE NO. 016-8320

SCALE: SHEET S-49 OF S-50 SHEETS STA. TO STA.

F.A.I. RTE.	SECTION	COUNTY	TOTAL SHEETS	SHEET NO.
94	FAI 94 22 Structure 2	COOK	157	118
		CONTRACT NO. 62R62		
		ILLINOIS FED. AID PROJECT		

Illinois Department of Transportation
Division of Highways
GSG

SOIL BORING LOG

Date 10/26/23

ROUTE Michigan City Rd DESCRIPTION Bridge Boring LOGGED BY DV

SECTION Michigan City Rd LOCATION , SEC. , TWP. , RNG. ,
Latitude 41.6207222, Longitude -087.5783806

COUNTY COOK DRILLING RIG Mobile B57 HAMMER TYPE AUTO
DRILLING METHOD HSA HAMMER EFF (%) 89.0

STRUCT. NO.
Station

BORING NO. BSB-6A
Station 401+71.66
Offset 26.64ft LT
Ground Surface Elev. 614.00 ft

Surface Water Elev. N/A ft
Stream Bed Elev. N/A ft

Groundwater Elev.:
First Encounter 590.5 ft ▼
Upon Completion N/A ft
After N/A Hrs. N/A ft

Description	Elev.	DEPTH (ft)	BLOWS (/6")	UCS Qu (tsf)	MOIST (%)
10 inches of Concrete	613.17				
8 inches of Aggregate Base	612.50		10		
Brown, Moist FILL: SAND, with gravel			15 13		9
	610.50				
Brown, Moist FILL: SAND, trace gravel			5		
		-5	7 7		8
			3		
			5 6		10
			4		
		-10	8 4		6
			1		
			1 1		8
			1		
	599.00	-15	1 2		9
Medium Dense to Dense Light Brown, Moist to Wet SAND, trace gravel (SP)			6		
			8 13		9
			12		
		-20	19 16		22
	593.00				
Medium Dense Gray, Wet SAND, trace gravel (SP)			11		
			8 3		25
	590.50 ▼				
Very Stiff to Hard Gray, Moist SILTY CLAY, trace gravel (CL/ML)			3		
			5 10	4.4 B	20
			5		
			5 9	5.0 B	19
			4		
		-30	4 7	5.8 B	20
			5		
		-35	7 10	4.2 R	20
			3		
		-40	4 7	3.5 B	20

The Unconfined Compressive Strength (UCS) Failure Mode is indicated by (B-Bulge, S-Shear, P-Penetrometer)
The SPT (N value) is the sum of the last two blow values in each sampling zone (AASHTO T206)

BBS, form 137 (Rev. 8-99)

Illinois Department of Transportation
Division of Highways
GSG

SOIL BORING LOG

Date 10/26/23

ROUTE Michigan City Rd DESCRIPTION Bridge Boring LOGGED BY DV

SECTION Michigan City Rd LOCATION , SEC. , TWP. , RNG. ,
Latitude 41.6207222, Longitude -087.5783806

COUNTY COOK DRILLING RIG Mobile B57 HAMMER TYPE AUTO
DRILLING METHOD HSA HAMMER EFF (%) 89.0

STRUCT. NO.
Station

BORING NO. BSB-6A
Station 401+71.66
Offset 26.64ft LT
Ground Surface Elev. 614.00 ft

Surface Water Elev. N/A ft
Stream Bed Elev. N/A ft

Groundwater Elev.:
First Encounter 590.5 ft ▼
Upon Completion N/A ft
After N/A Hrs. N/A ft

Description	Elev.	DEPTH (ft)	BLOWS (/6")	UCS Qu (tsf)	MOIST (%)
Very Stiff to Hard Gray, Moist SILTY CLAY, trace gravel (CL/ML) *(continued)*					
			3		
		-45	4 5	3.8 B	21
			3		
		-50	5 6	3.5 B	17
			5		
		-55	6 10	5.0 R	16
			9		
	555.00	-60	16 15	7.5 B	14
Hard Gray, Moist SILTY CLAY LOAM, trace gravel (ML/CL) *(continued)*					
	550.50				
Hard to Very Hard Gray, Moist SILTY CLAY, trace gravel (CL/ML)			6		
		-65	8 9	5.0 B	18
			10		
		-70	11 14	10.0 B	13
	540.50				
Very Hard Gray, Moist SILTY CLAY LOAM, trace gravel (ML/CL)			15		
		-75	33 40	10.8 R	13
Push Rock at 78.5 feet			50		
	534.00	-80			

End of Boring

The Unconfined Compressive Strength (UCS) Failure Mode is indicated by (B-Bulge, S-Shear, P-Penetrometer)
The SPT (N value) is the sum of the last two blow values in each sampling zone (AASHTO T206)

BBS, form 137 (Rev. 8-99)

MODEL: $MODELNAME$
FILE NAME: G:\LP20720 IDOT D1 PTB 204-001 Michigan City Rd Bridge\03A Design\01 CADD\02 Sheet\Structures\Bridge\D162R62-050-Boring Log7.dgn

DELTA ENGINEERING GROUP, LLC
CONSULTING ENGINEERS, CONSTRUCTION MANAGERS, SURVEYORS
111 W JACKSON BLVD. SUITE 910
CHICAGO, IL 60604
T 312.377.7700, F 312.427 6145

USER NAME = rmamucod	DESIGNED - RC	REVISED -	
	DRAWN - RM	REVISED -	
PLOT SCALE = 2:0.0000 ':" / in.	CHECKED - SMK	REVISED -	
PLOT DATE = 12/13/2024	DATE - 12/13/2024	REVISED -	

STATE OF ILLINOIS
DEPARTMENT OF TRANSPORTATION

BORING LOGS - 7
STRUCTURE NO. 016-8320

SCALE: SHEET S-50 OF S-50 SHEETS STA. TO STA.

F.A.I. RTE.	SECTION	COUNTY	TOTAL SHEETS	SHEET NO.
94	FAI 94 22 Structure 2	COOK	157	119

CONTRACT NO. 62R62
ILLINOIS FED. AID PROJECT

Bench Mark: Chiseled square cut in Northeast corner of wingwall at Northwest corner of Michigan City Road deck Elev. 613.98.

Existing Structure: None

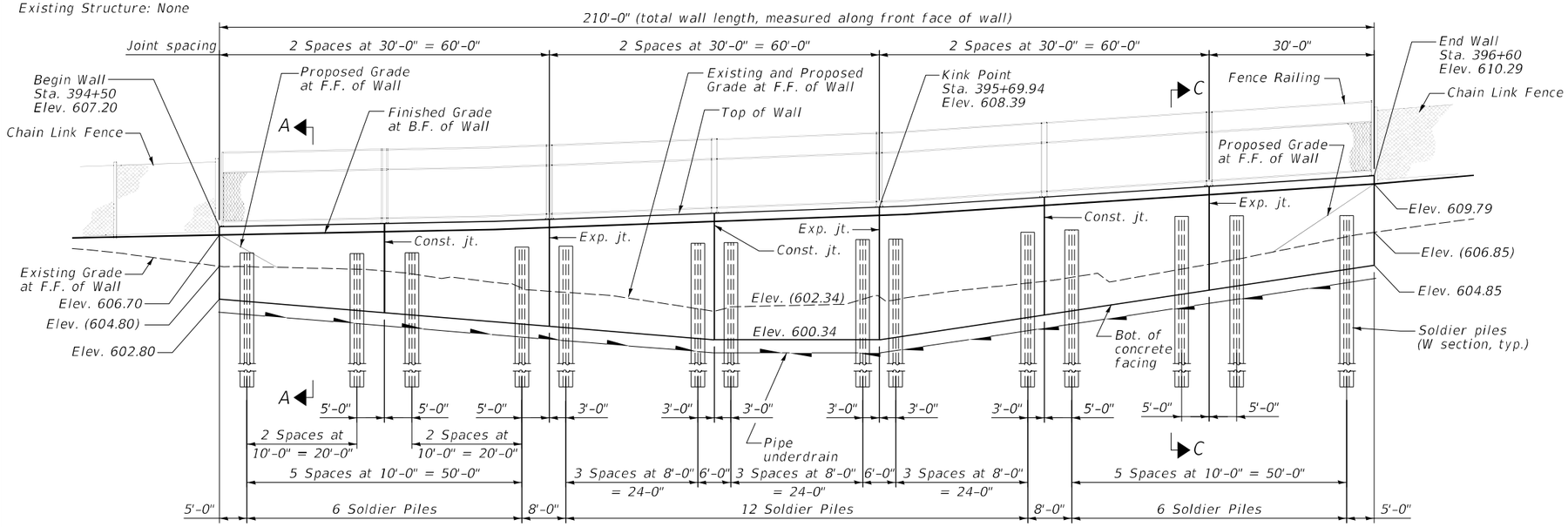

ELEVATION PROFILE
(Looking @ B.F. Wall)

DESIGN SPECIFICATIONS

2020 AASHTO LRFD Bridge Design Specifications, 9th Edition with 2015 Interims

DESIGN STRESSES

FIELD UNITS

f'c = 3,500 psi
fy = 60,000 psi (Reinforcement)
fy = 50,000 psi (M270 Grade 50)

HIGHWAY CLASSIFICATION

Michigan City Road
Functional Class: Other Principal Arterial
ADT: 9,300 (2014); 9,579 (2032)
ADTT: 279 (2014); 287 (2032)
DHV: 930 (2014)
Design Speed: 35 m.p.h.
Posted Speed: 35 m.p.h.
Two-Way Traffic
Directional Distribution: 50:50

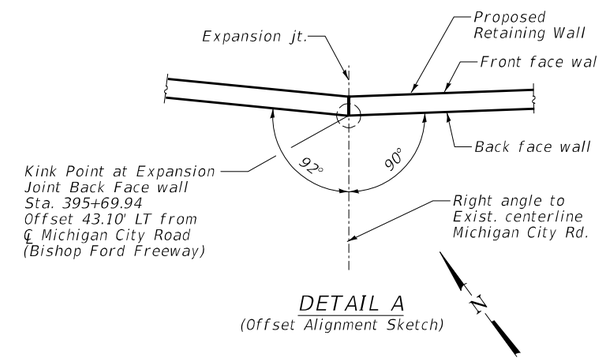

DETAIL A
(Offset Alignment Sketch)

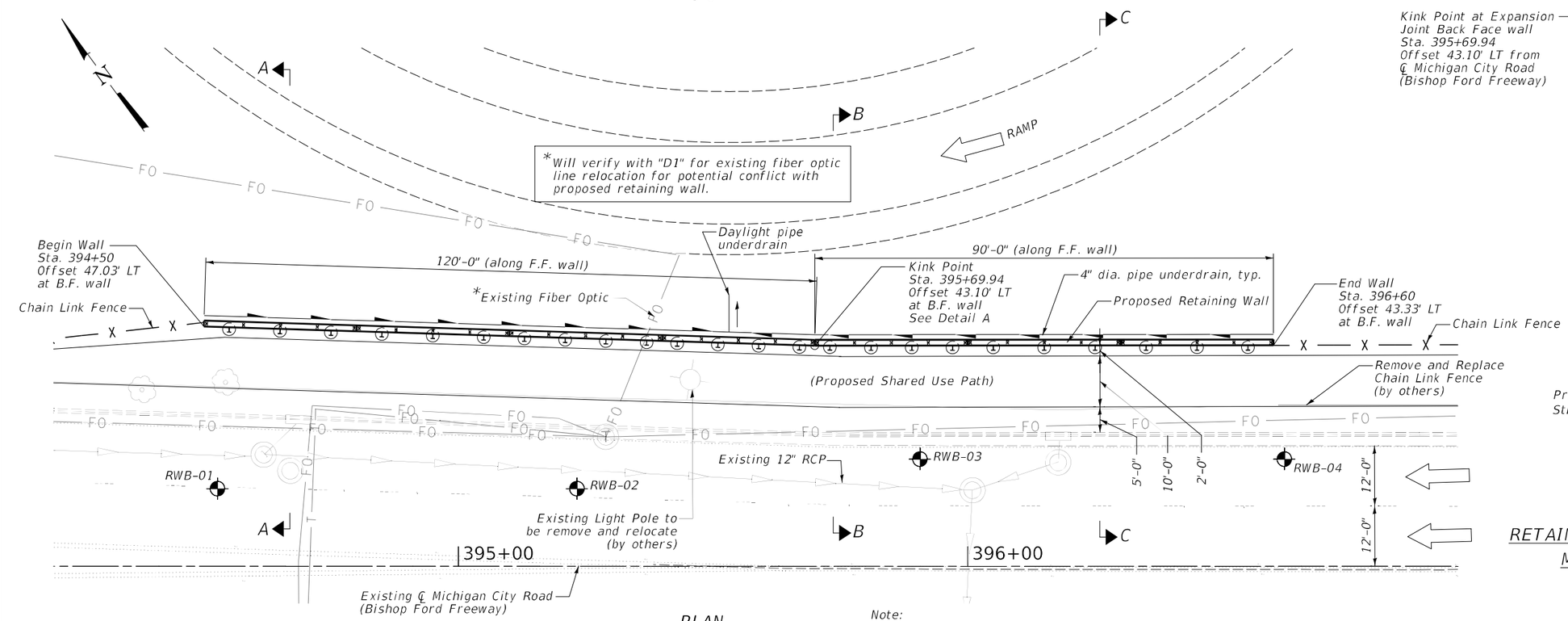

PLAN

Note:
1. All offsets are measured to Back Face Wall from the centerline of Michigan City Road.

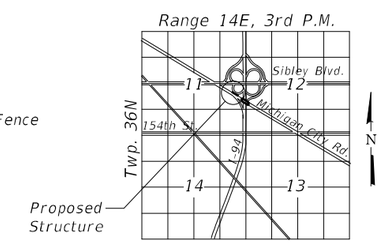

LOCATION SKETCH

GENERAL PLAN & ELEVATION
RETAINING WALL ALONG SHARED USE PATH
MICHIGAN CITY ROAD OVER I-94
(BISHOP FORD FREEWAY)
COOK COUNTY
STATION 394+50 TO 396+60

RW-1

GENERAL NOTES:

1. No field welding is permitted except as specified in the contract documents.
2. Reinforcement bars shall conform to the requirements of ASTM A706 Grade 60.
3. Reinforcement bars designated (E) shall be epoxy coated.
4. The Contractor is responsible for the design and performance of the lagging using no less than a 3 inches nominal rough sawn thickness and timber with a minimum allowable bending stress of 1,000 psi.
5. The clear cover for the reinforcement bars to the surface of concrete shall be 2" unless otherwise shown.
6. Protective Coat shall be applied to all exposed surfaces of the concrete facing for the full length of the wall.
7. All exposed concrete edges shall have 3/4"x45 degree chamfer, except where shown otherwise. Chamfer on vertical edges shall be continued a minimum of one foot below finished grade level.

INDEX OF SHEETS

TOTAL BILL OF MATERIAL

ITEM	UNIT	TOTAL
Structure Excavation	Cu. Yd.	39
Concrete Structures	Cu. Yd.	57.5
Protective Coat	Sq. yd.	51
Stud Shear Connectors	Each	264
Reinforcement Bars, Epoxy Coated	Pound	8,700
Name Plates	Each	1
Bicycle Railing	Foot	210
Drilling and Setting Soldier Piles (In Soil)	Cu. Ft.	2,592
Form Liner Textured Surface	Sq. Ft.	960
Furnishing Soldier Piles (W Section)	Foot	480
Geocomposite Wall Drain	Sq. yd.	107
Pipe Underdrains for Structures 4"	Foot	220
Granular Backfill for Structures	Cu. Yd.	126
Untreated Timber Lagging	Sq. Ft.	960

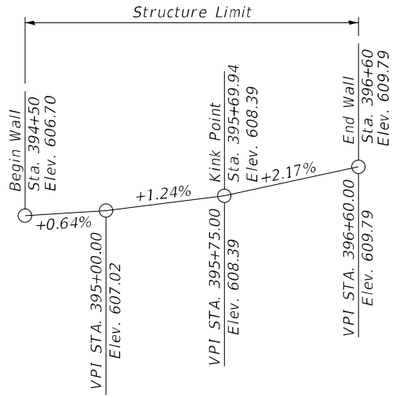

PROFILE GRADE

(Gutter line behind Retaining Wall)

MODEL: $MODELNAME$
FILE NAME: G:\P230720 IDOT D1 PTB 204-001 Hitchcock City Rd Bridge\03A Design\01 CADD\02 Sheets\Structures\Retaining Wall\0162R62-951-RW-GenData.dgn

DELTA ENGINEERING GROUP, LLC
CONSULTING ENGINEERS, CONSTRUCTION MANAGERS, SURVEYORS
111 W JACKSON BLVD, SUITE 910
CHICAGO, IL 60604
T 312.377.7700, F 312.427.6145

USER NAME = rmamucod	DESIGNED - RC	REVISED -	
	DRAWN - RM	REVISED -	
PLOT SCALE = 2:0.0000 ':" / in.	CHECKED - SMK	REVISED -	
PLOT DATE = 12/13/2024	DATE - 12/13/2024	REVISED -	

STATE OF ILLINOIS
DEPARTMENT OF TRANSPORTATION

GENERAL DATA

SCALE: SHEET OF SHEETS STA. TO STA.

F.A.I. RTE.	SECTION	COUNTY	TOTAL SHEETS	SHEET NO.
94	FAI 94 22 Structure 2	COOK	157	121
		CONTRACT NO. 62R62		
		ILLINOIS	FED. AID PROJECT	

RW-2

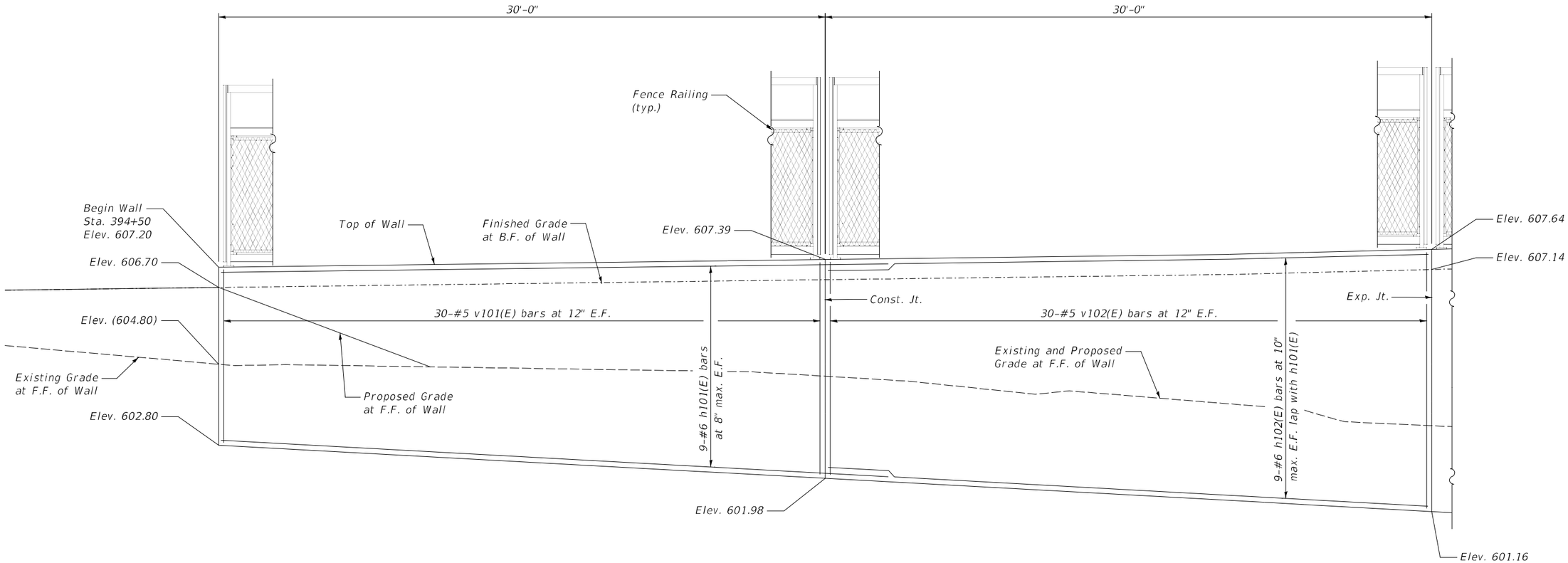

ELEVATION

(Looking @ B.F. Wall)

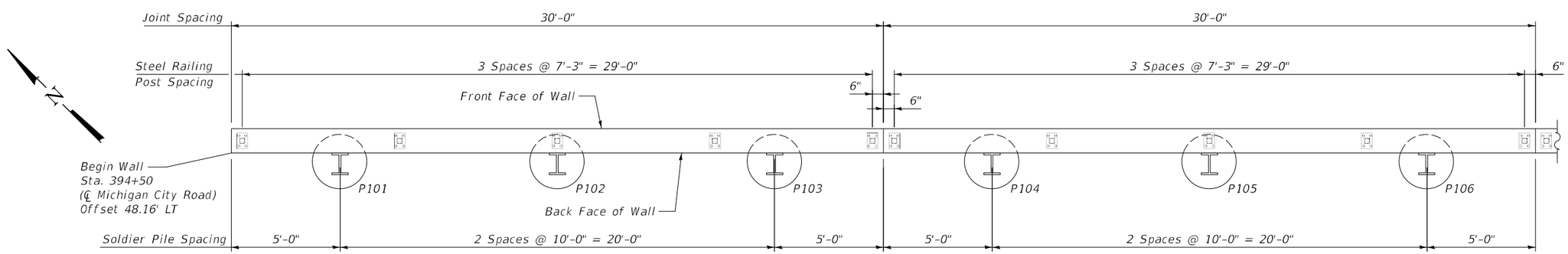

PLAN

RW-3

DELTA ENGINEERING GROUP, LLC CONSULTING ENGINEERS, CONSTRUCTION MANAGERS, SURVEYORS 111 W JACKSON BLVD, SUITE 910 CHICAGO, IL 60604 T 312.377.7700, F 312.427.6145	USER NAME = rmanucod	DESIGNED - RC	REVISED -	STATE OF ILLINOIS DEPARTMENT OF TRANSPORTATION	PLAN AND ELEVATION 1; STA. 394+50 TO STA. 395+09.97 RETAINING WALL ALONG SHARED USE PATH	F.A.I. RTE.	SECTION	COUNTY	TOTAL SHEETS / SHEET NO.
		DRAWN - RM	REVISED -			94	FAI 94 22 Structure 2	COOK	157 / 122
	PLOT SCALE = 5:4.0000 ':" / in.	CHECKED - SMK	REVISED -					CONTRACT NO. 62R62	
	PLOT DATE = 12/13/2024	DATE - 12/13/2024	REVISED -		SCALE: SHEET OF SHEETS STA. TO STA.		ILLINOIS FED. AID PROJECT		

MODEL: $MODELNAMES
FILE NAME: G:\P20720 IDOT D1 PTB 204-001 Michigan City Rd Bridge\03A Design\01 CADD\02 Sheets\Structures\Retaining Wall\D162R62-052-RW-R1-sElev01.dgn

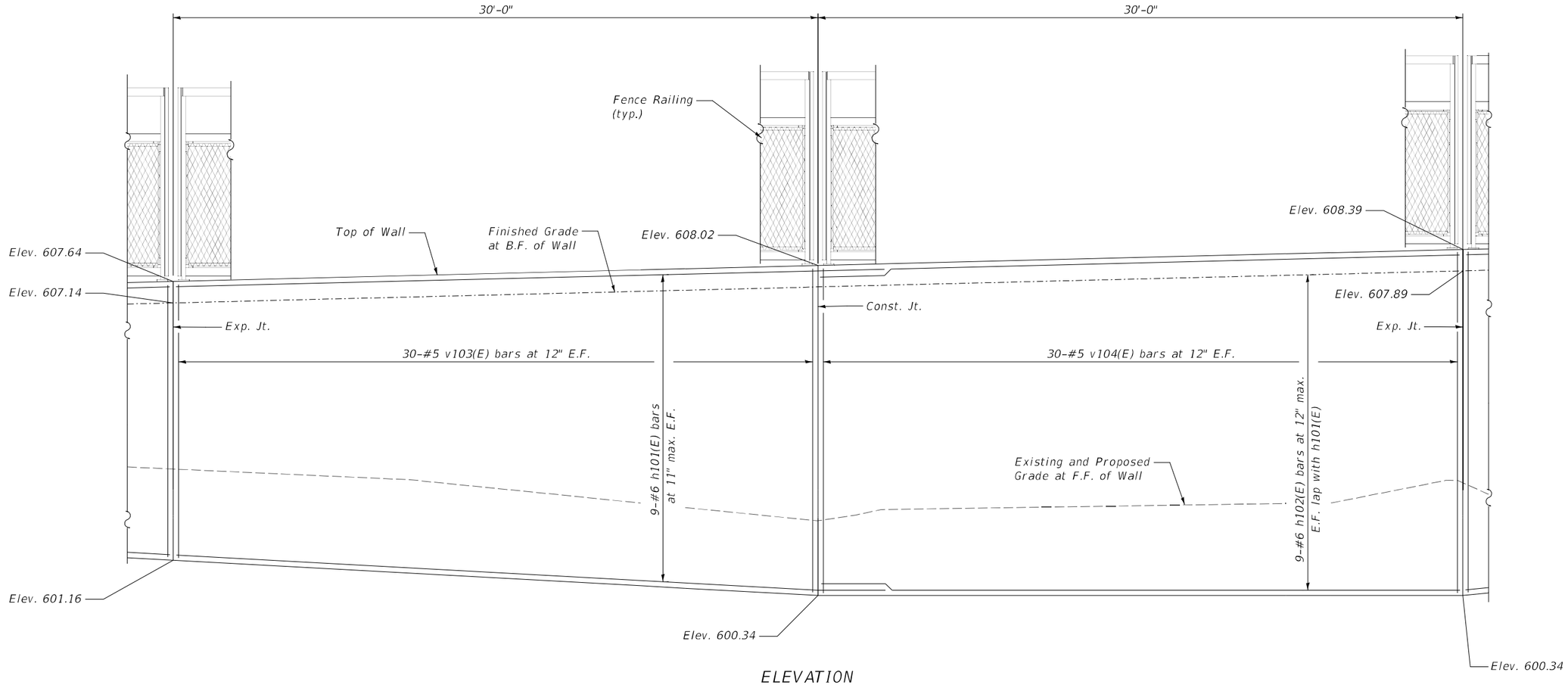

ELEVATION
(Looking @ B.F. Wall)

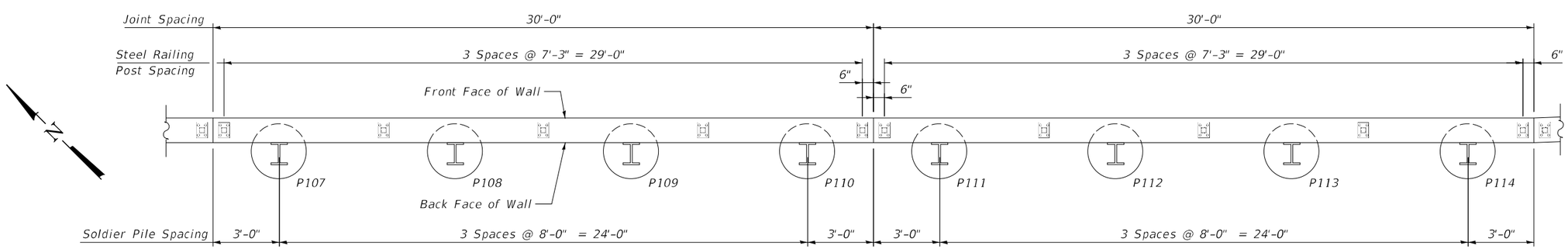

PLAN

RW-4

MODEL: $MODELNAME$
FILE NAME: G:\P20720 IDOT D1 PTB 204-001 Michigan City Rd Bridge\03A Design\01 CADD\02 Sheets\Structures\Retaining Wall\D162R62-053-RW-4_Plan-Elev-02.dgn

DELTA ENGINEERING GROUP, LLC
CONSULTING ENGINEERS, CONSTRUCTION MANAGERS, ACCESS PLANNERS
111 W JACKSON BLVD, SUITE 910
CHICAGO, IL 60604
T 312.377.7700, F 312.427.6145

USER NAME = rmamucod	DESIGNED - RC	REVISED -	
	DRAWN - RM	REVISED -	
PLOT SCALE = 5:4.0000 ':" / in.	CHECKED - SMK	REVISED -	
PLOT DATE = 12/13/2024	DATE - 12/13/2024	REVISED -	

STATE OF ILLINOIS
DEPARTMENT OF TRANSPORTATION

PLAN AND ELEVATION 2; STA. 395+09.97 TO STA. 395+69.94
RETAINING WALL ALONG SHARED USE PATH

SCALE: SHEET OF SHEETS STA. TO STA.

F.A.I. RTE.	SECTION	COUNTY	TOTAL SHEETS	SHEET NO.
94	FAI 94 22 Structure 2	COOK	157	123
		CONTRACT NO. 62R62		
	ILLINOIS	FED. AID PROJECT		

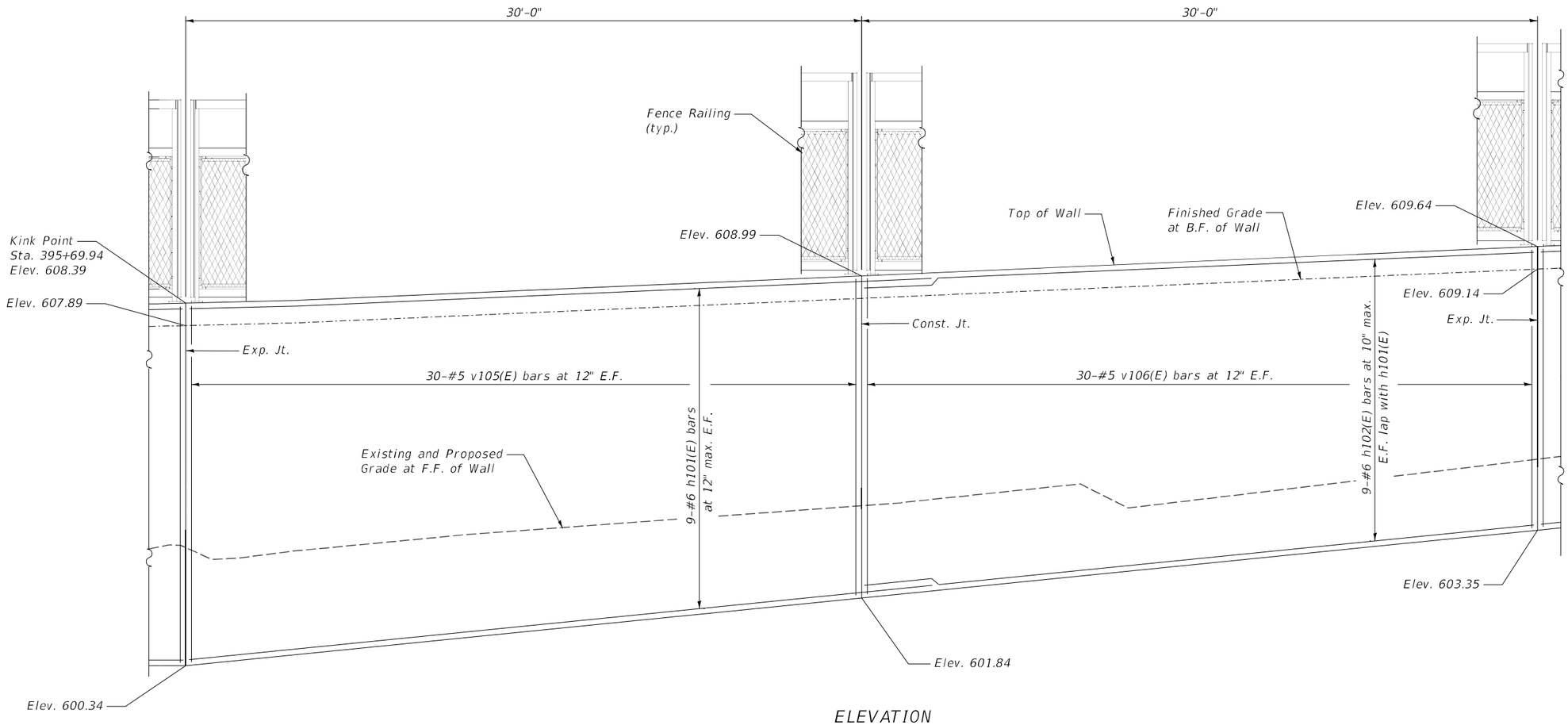

ELEVATION
(Looking @ B.F. Wall)

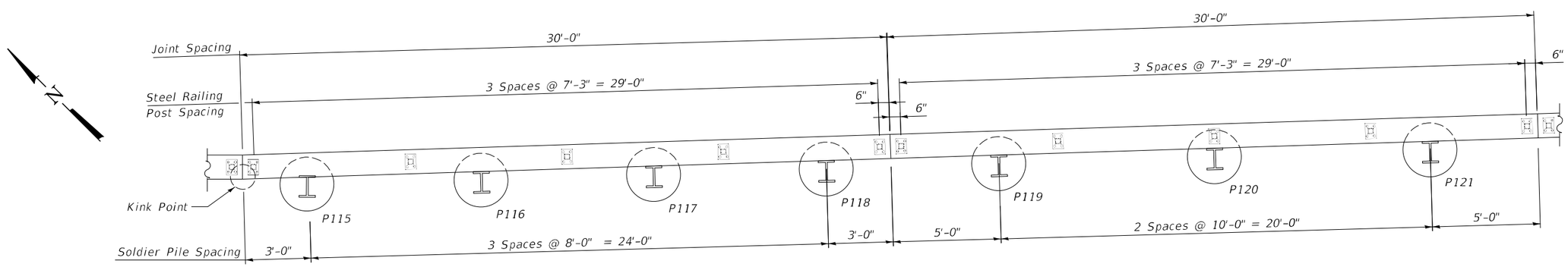

PLAN

RW-5

MODEL: SMODELNAMES
FILE NAME: G:\P20270 IDOT D1 PTB 204-001 Michigan City Rd Bridge\03A Design\01 CADD\02 Sheets\Structures\Retaining Wall\D162R62-0594-RW-PL-sfle03.dgn

DELTA ENGINEERING GROUP, LLC
CONSULTING ENGINEERS, CONSTRUCTION MANAGERS, SURVEYORS
111 W JACKSON BLVD, SUITE 910
CHICAGO, IL 60604
T 312.377.7700, F 312.427.6145

USER NAME = rmamucod	DESIGNED - RC	REVISED -	
	DRAWN - RM	REVISED -	
PLOT SCALE = 5:4.0000 ':" / in.	CHECKED - SMK	REVISED -	
PLOT DATE = 12/13/2024	DATE - 12/13/2024	REVISED -	

STATE OF ILLINOIS
DEPARTMENT OF TRANSPORTATION

PLAN AND ELEVATION 3; STA. 395+69.94 TO STA. 396+30.02
RETAINING WALL ALONG SHARED USE PATH

SCALE: SHEET OF SHEETS STA. TO STA.

F.A.I. RTE.	SECTION	COUNTY	TOTAL SHEETS	SHEET NO.
94	FAI 94 22 Structure 2	COOK	157	124
		CONTRACT NO. 62R62		
		ILLINOIS	FED. AID PROJECT	

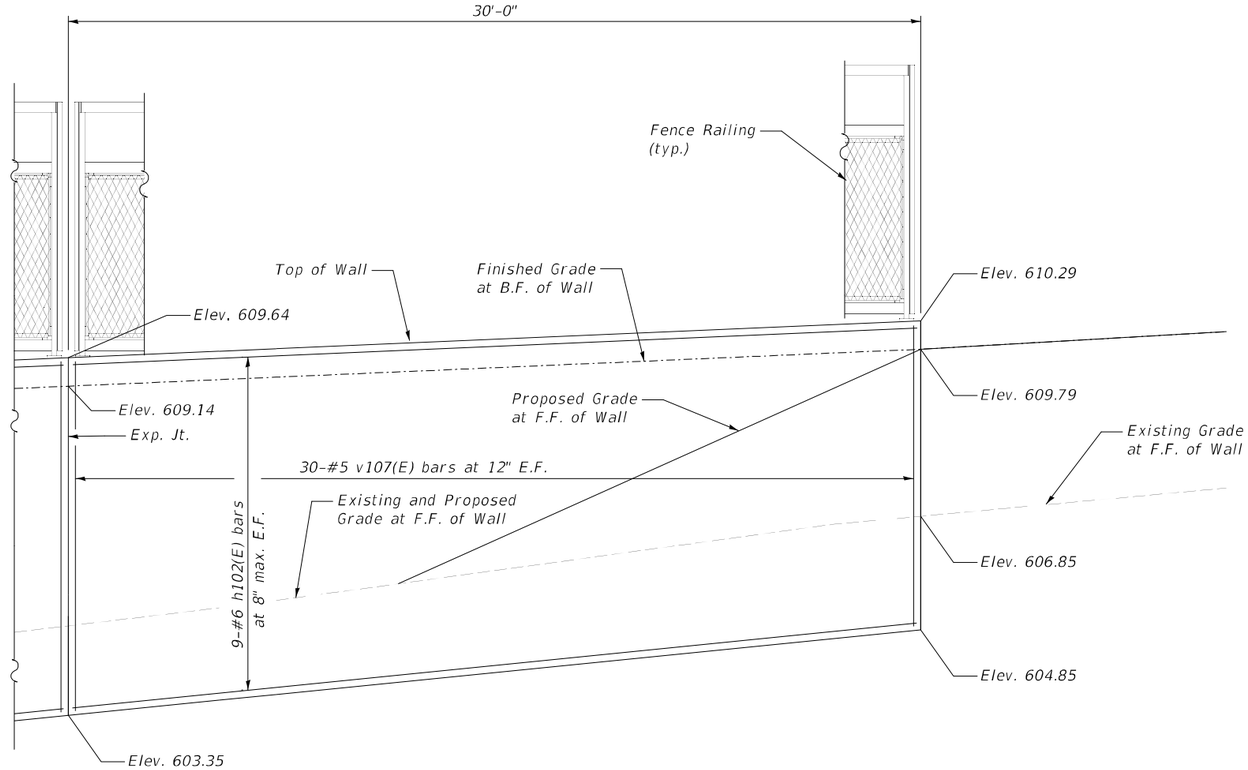

ELEVATION

(Looking @ B.F. Wall)

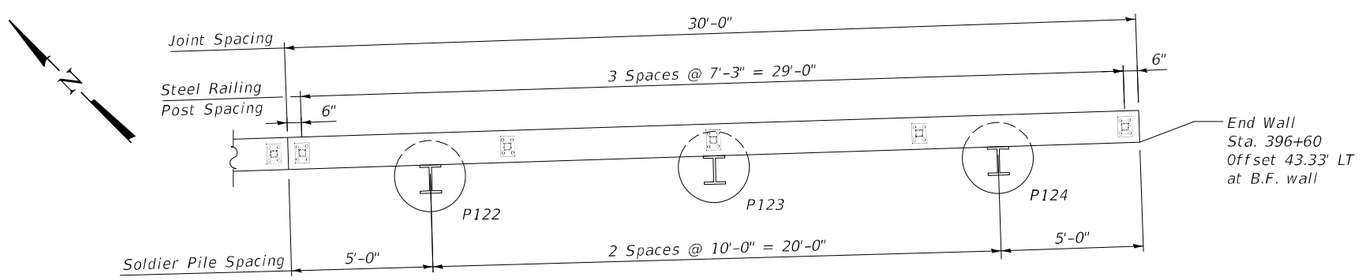

PLAN

RW-6

DELTA ENGINEERING GROUP, LLC CONSULTING ENGINEERS, CONSTRUCTION MANAGERS, SURVEYORS 111 W. JACKSON BLVD. SUITE 910 CHICAGO, IL 60604 T 312.377.7700, F 312.427.6145	USER NAME = rmanucod	DESIGNED - RC	REVISED -	STATE OF ILLINOIS DEPARTMENT OF TRANSPORTATION	PLAN AND ELEVATION 4; STA. 396+30.02 TO STA. 396+40 RETAINING WALL ALONG SHARED USE PATH	F.A.I. RTE.	SECTION	COUNTY	TOTAL SHEETS / SHEET NO.
		DRAWN - RM	REVISED -			94	FAI 94 22 Structure 2	COOK	157 / 125
	PLOT SCALE = 5:4,0000 ':" / in.	CHECKED - SMK	REVISED -					CONTRACT NO. 62R62	
	PLOT DATE = 12/13/2024	DATE - 12/13/2024	REVISED -		SCALE: SHEET OF SHEETS STA. TO STA.		ILLINOIS	FED. AID PROJECT	

MODEL: $MODELNAME$
FILE NAME: G:\P220720 IDOT D1 PTB 204-001 Michigan City Rd Bridge\03A Design\01 CADD\02 Sheets\Structures\Retaining Wall\D162R62-095-RW-4_sfiles\d4.dgn

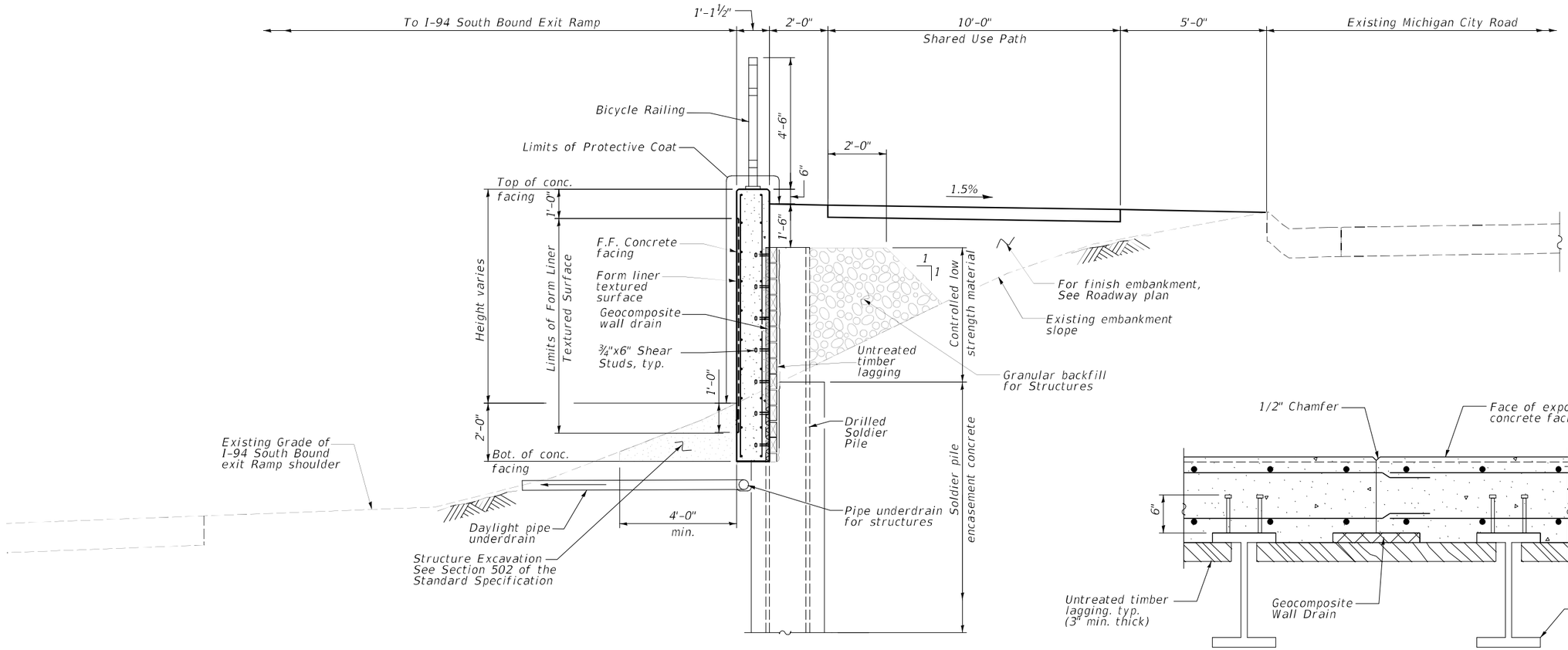

TYPICAL SECTION - SOLDIER PILE WALL

(Looking Upstation)

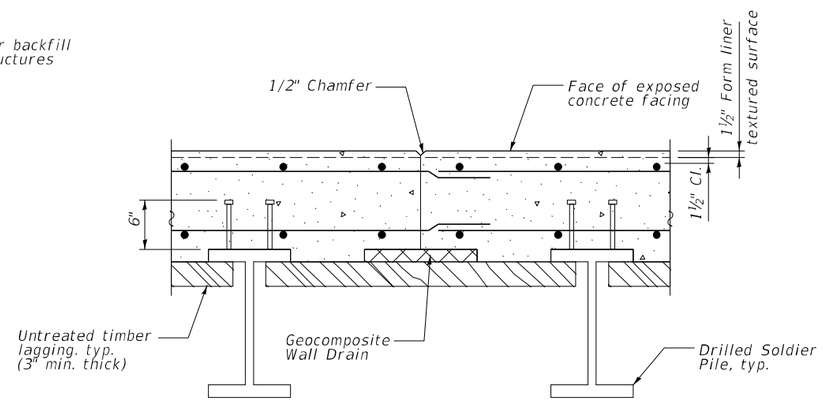

CONSTRUCTION JOINT DETAILS

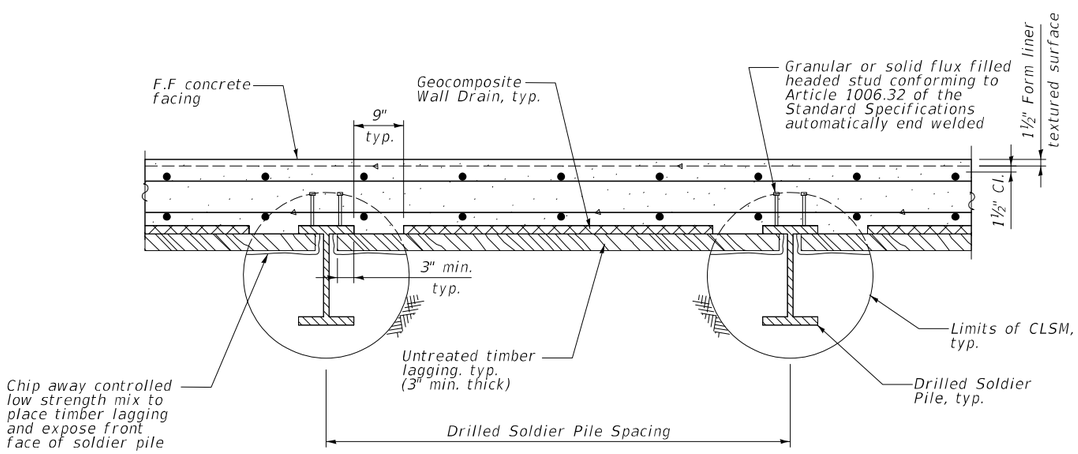

HORIZONTAL SECTION THRU SOLDIER WALL

The Contractor is responsible for the design and performance of the lagging using no less than a 3 in. nominal rough-sawn thickness and timber with minimum allowable bending stress of 1000 psi. A nominal thickness up to 6 in. is expected in some portions of the wall.

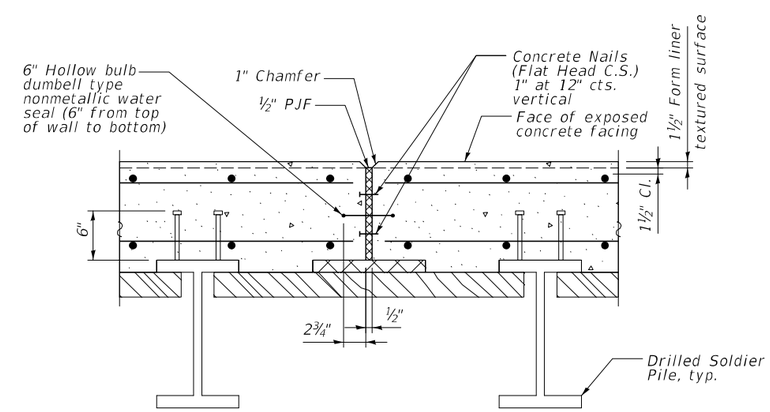

EXPANSION JOINT DETAILS

MODEL: sMODELNAMES
FILE NAME: G:\P220720 IDOT D1 PTB 204-001 Michigan City Rd Bridge\03A Design\01 CADD\02 Sheets\Structures\Retaining Wall\D162R62-dsb-RW-Det.dgn

DELTA ENGINEERING GROUP, LLC
CONSULTING ENGINEERS, CONSTRUCTION MANAGERS, SURVEYORS
111 W JACKSON BLVD, SUITE 910
CHICAGO, IL 60604
T 312.377.7700, F 312.427.6145

USER NAME = rmanucod	DESIGNED - RC	REVISED -	
	DRAWN - RM	REVISED -	
PLOT SCALE = 4:0.0000 ':" / in.	CHECKED - SMK	REVISED -	
PLOT DATE = 12/13/2024	DATE - 12/13/2024	REVISED -	

STATE OF ILLINOIS
DEPARTMENT OF TRANSPORTATION

SECTION AND DETAILS - 1

SCALE: | SHEET OF SHEETS | STA. TO STA.

RW-7

F.A.I. RTE.	SECTION	COUNTY	TOTAL SHEETS	SHEET NO.
94	FAI 94 22 Structure 2	COOK	157	126

CONTRACT NO. 62R62

ILLINOIS FED. AID PROJECT

SOLDIER PILE SCHEDULE

Soldier Pile Data						Concrete Encasement Data		
Pile No.	Size	Top Elev.	Bot. Elev.	Length (ft)	No. of Studs	Dia. (in)	Top Elev.	Length (ft)
P101	W24x131	605.23	587.23	18.00	6	36"	602.66	15.43
P102	W24x131	605.29	587.29	18.00	8	36"	602.36	15.07
P103	W24x131	605.34	587.34	18.00	8	36"	602.06	14.72
P104	W24x131	605.41	587.41	18.00	8	36"	601.90	14.49
P105	W24x131	605.50	587.50	18.00	10	36"	601.60	14.10
P106	W24x131	605.58	587.58	18.00	10	36"	601.30	13.72
P107	W24x131	605.68	583.68	22.00	10	36"	601.08	17.40
P108	W24x131	605.78	583.78	22.00	12	36"	600.86	17.08
P109	W24x131	605.88	583.88	22.00	12	36"	600.64	16.76
P110	W24x131	605.98	583.98	22.00	12	36"	600.42	16.44
P111	W24x131	606.05	584.05	22.00	12	36"	600.34	16.29
P112	W24x131	606.15	584.15	22.00	14	36"	600.34	16.19
P113	W24x131	606.25	584.25	22.00	14	36"	600.34	16.09
P114	W24x131	606.35	584.35	22.00	14	36"	600.34	15.99
P115	W24x131	606.42	584.42	22.00	14	36"	600.49	16.07
P116	W24x131	606.59	584.59	22.00	14	36"	600.56	15.97
P117	W24x131	606.75	584.75	22.00	14	36"	600.62	15.87
P118	W24x131	606.92	584.92	22.00	14	36"	600.69	15.77
P119	W24x131	607.10	589.10	18.00	10	36"	602.90	13.80
P120	W24x131	607.34	589.34	18.00	10	36"	603.05	13.71
P121	W24x131	607.58	589.58	18.00	10	36"	603.20	13.62
P122	W24x131	607.71	589.71	18.00	10	36"	603.50	13.79
P123	W24x131	607.95	589.95	18.00	10	36"	604.05	14.11
P124	W24x131	608.18	590.18	18.00	8	36"	604.60	14.42

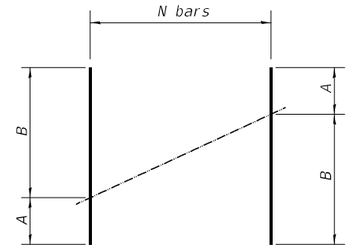

Bar	A	B	N
v101(E)	4'-1"	5'-2"	30
v102(E)	5'-2"	6'-3"	30
v103(E)	6'-3"	7'-5"	30
v104(E)	7'-5"	7'-9"	30
v105(E)	6'-6"	7'-9"	30
v106(E)	5'-6"	6'-6"	30
v107(E)	5'-2"	5'-6"	30

BAR LIST

Bar	No.	Size	Length	Shape
h101(E)	54	#6	34'-2"	
h102(E)	72	#6	29'-9"	
v101(E)	30	#5	9'-3"	
v102(E)	30	#5	11'-5"	
v103(E)	30	#5	13'-8"	
v104(E)	30	#5	15'-2"	
v105(E)	30	#5	14'-3"	
v106(E)	30	#5	12'-0"	
v107(E)	30	#5	10'-8"	

BAR CUTTING BAR

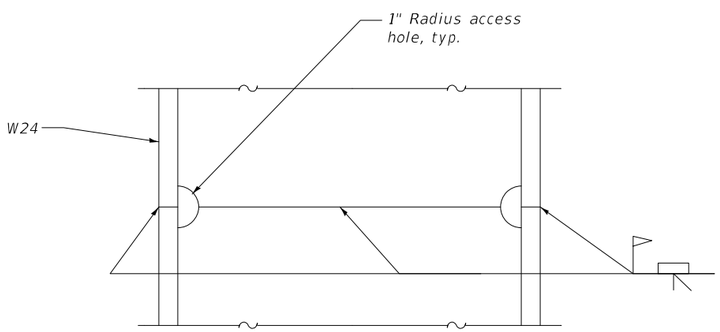

SOLDIER PILE WELDED SPLICE DETAIL (OPTIONAL)

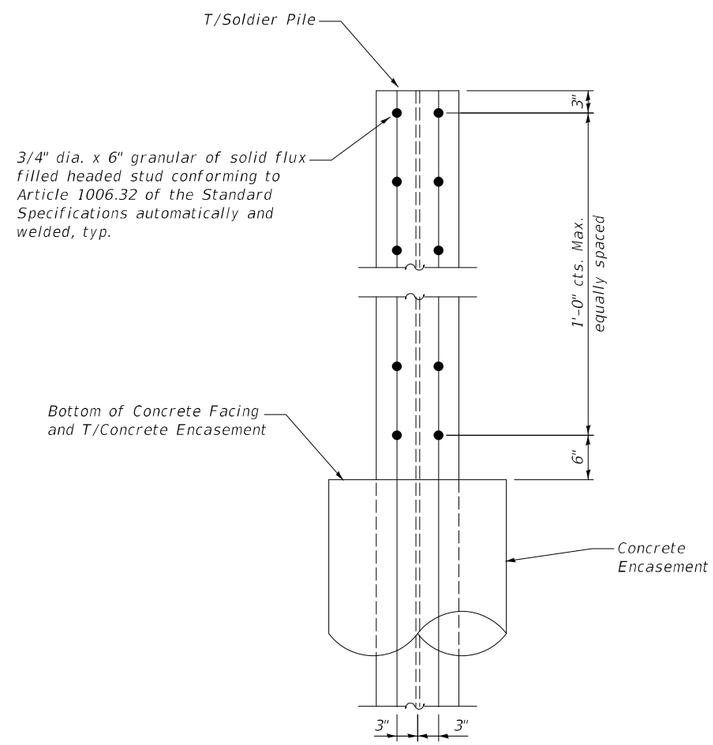

SHEAR STUD DETAIL

MODEL: $MODELNAME$
FILE NAME: G:\P20220 IDOT D1 PTB 204-001 Kitchigan City Rd Bridge\03A Design\01 CAD\02 Sheets\Structures\Retaining Wall\D162R62-052-RW-Detail02.dgn

RW-8

DELTA ENGINEERING GROUP, LLC
CONSULTING ENGINEERS, CONSTRUCTION MANAGERS, SURVEYORS
111 W JACKSON BLVD, SUITE 910
CHICAGO, IL 60604
T 312.377.7700, F 312.427.6145

USER NAME = rmamucod	DESIGNED - RC	REVISED -	
	DRAWN - RM	REVISED -	
PLOT SCALE = 2:0.0000 ':" / in.	CHECKED - SMK	REVISED -	
PLOT DATE = 12/13/2024	DATE - 12/13/2024	REVISED -	

STATE OF ILLINOIS
DEPARTMENT OF TRANSPORTATION

SECTION AND DETAILS - 2

SCALE: | SHEET OF SHEETS | STA. TO STA.

F.A.I. RTE.	SECTION	COUNTY	TOTAL SHEETS	SHEET NO.
94	FAI 94 22 Structure 2	COOK	157	127

CONTRACT NO. 62R62

ILLINOIS | FED. AID PROJECT

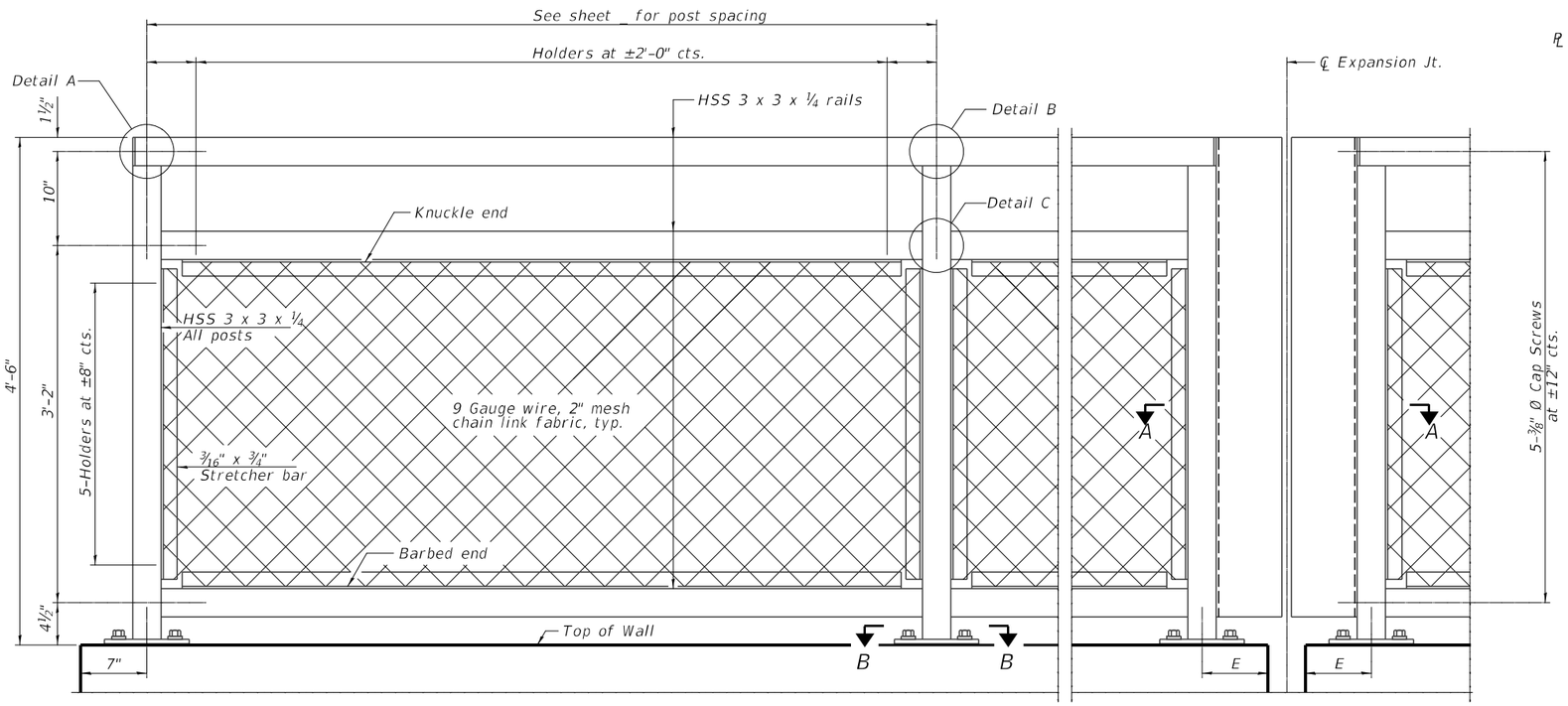

ELEVATION BICYCLE RAILING
(Inside face)

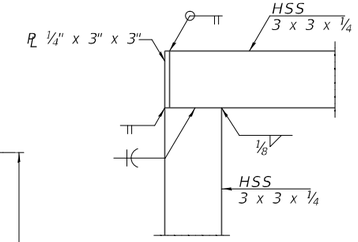

DETAIL A

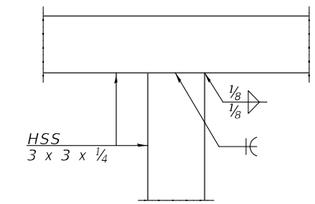

DETAIL B

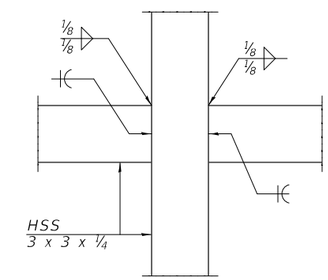

DETAIL C

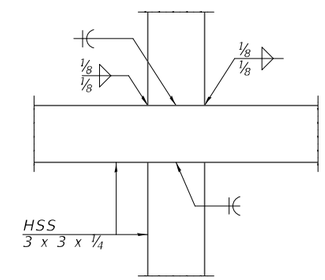

DETAIL D

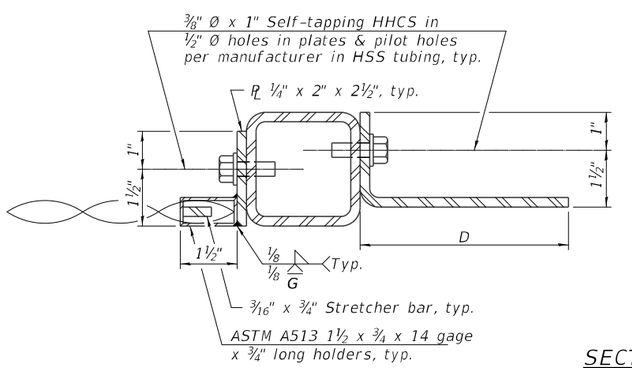

SECTION A-A

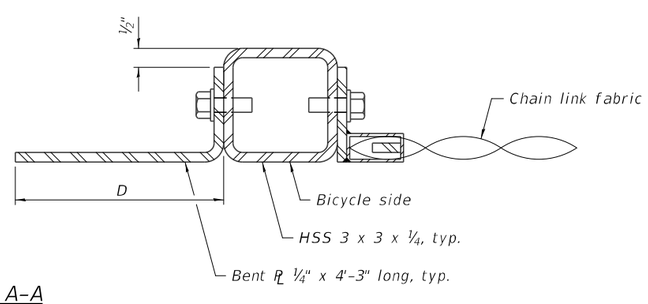

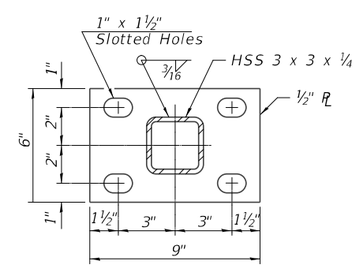

SECTION B-B

TABLE OF DIMENSIONS

Location	T	A	B	C	D	E
Over Strip Seal Jt.	≤4"	2½"	1'-2"	2'-4"	7¼"	7"
Over Finger or Modular Jt.	≤9½"	5½"	1'-7¾"	3'-3½"		
Over Finger or Modular Jt.	≤15"	8¼"	2'-1¼"	4'-2½"		

$T=1\frac{1}{8}$" ; total movement based on total temperature range from -20°F to 120°F along centerline of roadway at expansion joint.

BILL OF MATERIAL

Item	Unit	Quantity
Bicycle Railing	Foot	210

RW-9

MODEL: $MODELNAME$
FILE NAME: G:\P229720 IDOT D1 PTB 204-001 Michigan City Rd Bridge\03A Design\01 CADD\02 Sheets\Structure\Retaining Wall\0162R62-058-RW-Railing Details01.dgn

DELTA ENGINEERING GROUP, LLC
CONSULTING ENGINEERS, CONSTRUCTION MANAGERS, SURVEYORS
111 W JACKSON BLVD, SUITE 910
CHICAGO, IL 60604
T 312.377.7700, F 312.427.6145

USER NAME = rmanucod	DESIGNED - RC	REVISED -	
	DRAWN - RM	REVISED -	
PLOT SCALE = 2:0.0000 ':" / in.	CHECKED - SMK	REVISED -	
PLOT DATE = 12/13/2024	DATE - 12/13/2024	REVISED -	

STATE OF ILLINOIS
DEPARTMENT OF TRANSPORTATION

BICYCLE RAILING DETAILS (1 OF 2)

SCALE: SHEET OF SHEETS STA. TO STA.

F.A.I. RTE.	SECTION	COUNTY	TOTAL SHEETS	SHEET NO.
94	FAI 94 22 Structure 2	COOK	157	128

CONTRACT NO. 62R62

ILLINOIS FED. AID PROJECT

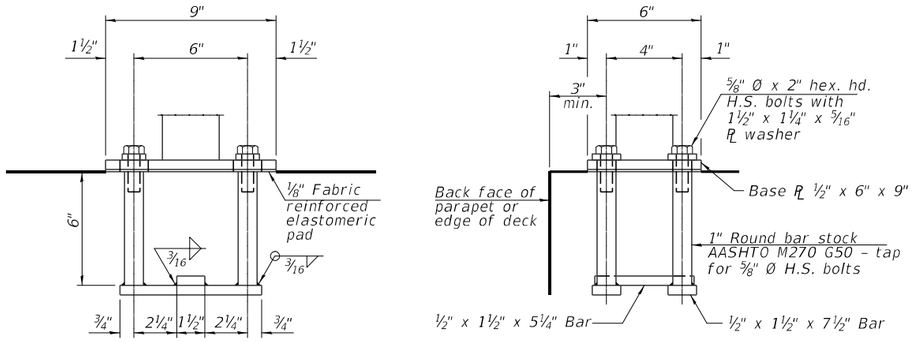

ANCHORAGE ASSEMBLY

The Bicycle Railing fasteners for end posts near expansion joints may need to be installed prior to installing the bent plates.

In lieu of the cast-in-place anchor device shown, the Contractor has the option of drilling and setting ⅝" Ø fully threaded anchor rods with the same plate washers as specified above and heavy hex lock nuts according to Article 509.06 of the Standard Specifications. Embedment shall be according to the manufacturer's specifications.

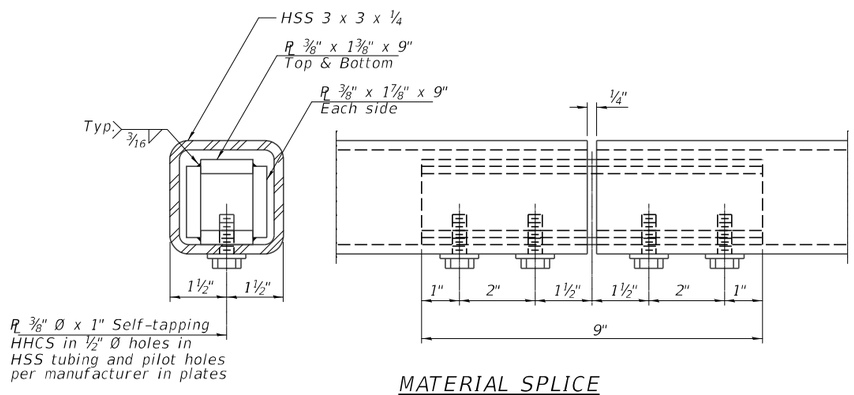

MATERIAL SPLICE

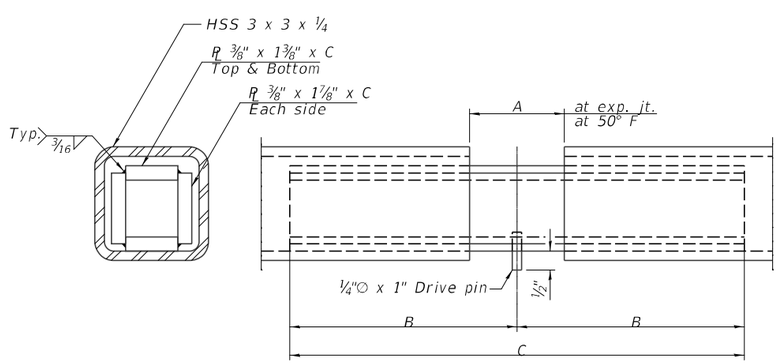

EXPANSION SPLICE

Notes:

Place reinforcement bars to miss anchor rod locations.

CVN testing is not required for the HSS tubing used in the Bicycle Railing.

All HSS tubing used for the Parapet Railing shall be CVN tested according to Article 1006.34(b) of the Standard Specifications.

All HSS tubing used for the Parapet Railing shall be ASTM A500 grade C.

All base plates used for the Paraper Railing shall be AASHTO M270 grade 50.

All heavy hex nuts shall be according to ASTM A 563 grade DH.

All fully threaded anchor rods shall be ASTM F1554 grade 105.

The post base plate shall be fastened to the curb snug tight and given an additional ⅛" turn.

Rail splice inserts may be built out of bent plates of the same thicknesses and outside geometry limits as the 4 plate rail splice inserts shown.

When the contract specifies a galvanized railing, all steel rail elements shall be galvanized according to Article 509.05 of the Standard Specifications. When the contract specifies a painted railing, all posts, rail, splices, anchor devices and plates of the railing shall be painted according to the paint system for railings as specified in the General Notes.

See sheet _ of _ for dimensions of concrete openings at expansion joints.

Illinois Department of Transportation
Division of Highways
GSG

SOIL BORING LOG

Page 1 of 1

Date 9/20/23

ROUTE Michigan City Rd DESCRIPTION Retaining Wall Boring LOGGED BY AA

SECTION Michigan City Rd LOCATION , SEC. , TWP. , RNG. ,
Latitude 41.6218694, Longitude -087.5805250

COUNTY COOK DRILLING RIG CME 75 HAMMER TYPE AUTO
DRILLING METHOD HSA HAMMER EFF (%) 79.8

STRUCT. NO.
Station

BORING NO. RWB-01
Station 394+52.69
Offset 15.20ft LT
Ground Surface Elev. 606.24 ft

Surface Water Elev. N/A ft
Stream Bed Elev. N/A ft

Groundwater Elev.:
First Encounter 595.2 ft ▼
Upon Completion N/A ft
After N/A Hrs. N/A ft

Description	Elev.	DEPTH (ft)	BLOWS (/6")	UCS Qu (tsf)	MOIST (%)
10 inches of Concrete	605.41				
5 inches of Subbase	604.99		9		
Brown, Moist FILL: SAND, trace gravel			14 15		5
			5		
			7 10		5
	601.24	-5			
Medium Dense to Dense Light Brown, Moist to Wet SAND, (SP)			3		
			5 6		10
			4		
			7 10		20
		-10			
		▼	6		
	594.24		16 17		25
Medium Dense to Dense Gray, Wet SAND, trace gravel (SP)			6		
			12 9		27
		-15			
			7		
			14 15		16
Cobbles at 17 feet	588.74				
Medium Dense Gray, Moist SILTY LOAM, (ML)			4		
			6 7		23
		-20			

Description	Elev.	DEPTH (ft)	BLOWS (/6")	UCS Qu (tsf)	MOIST (%)
	585.24				
Stiff to Very Stiff Gray, Moist to Very Moist SILTY CLAY, (CL/ML)			3		
			3 6	2.3 B	28
			2		
			3 2	1.0 B	28
		-25			
			3		
			4 7	2.5 B	24
			4		
			6 6	2.5 B	23
	576.24	-30			
End of Boring					
		-35			
		-40			

The Unconfined Compressive Strength (UCS) Failure Mode is indicated by (B-Bulge, S-Shear, P-Penetrometer)
The SPT (N value) is the sum of the last two blow values in each sampling zone (AASHTO T206)

BBS, form 137 (Rev. 8-99)

Illinois Department of Transportation
Division of Highways
GSG

SOIL BORING LOG

Page 1 of 1

Date 9/20/23

ROUTE Michigan City Rd DESCRIPTION Retaining Wall Boring LOGGED BY AA

SECTION Michigan City Rd LOCATION , SEC. , TWP. , RNG. ,
Latitude 41.6217528, Longitude -087.5803139

COUNTY COOK DRILLING RIG CME 75 HAMMER TYPE AUTO
DRILLING METHOD HSA HAMMER EFF (%) 79.8

STRUCT. NO.
Station

BORING NO. RWB-02
Station 395+23.26
Offset 15.21ft LT
Ground Surface Elev. 606.71 ft

Surface Water Elev. N/A ft
Stream Bed Elev. N/A ft

Groundwater Elev.:
First Encounter 595.7 ft ▼
Upon Completion N/A ft
After N/A Hrs. N/A ft

Description	Elev.	DEPTH (ft)	BLOWS (/6")	UCS Qu (tsf)	MOIST (%)
10 inches of Concrete	605.88				
5 inches of Subbase	605.46		6		
Brown, Moist FILL: SAND, trace gravel			11 12		9
			3		
			6 9		6
		-5			
	600.71				
Medium Dense to Dense Light Brown, Moist to Wet SAND, (SP)			5		
			7 7		5
			5		
			7 8		9
		-10			
		▼	9		
			14 16		25
	593.21				
Medium Dense Gray, Wet SAND, (SP)			5		
			12 14		26
		-15			
			5		
	589.71		6 4		21
Medium Dense Gray, Moist SILTY LOAM, trace gravel (ML)			8		
			10 9		23
		-20			

Description	Elev.	DEPTH (ft)	BLOWS (/6")	UCS Qu (tsf)	MOIST (%)
Medium Dense Gray, Moist SILTY LOAM, trace gravel (ML) *(continued)*			6		
	584.71		7 4	1.5 P	24
Stiff to Very Stiff Gray, Moist to Very Moist SILTY CLAY, trace gravel (CL/ML)			1		
			2 5	2.1 B	21
		-25			
			4		
			3 5	1.9 B	27
			2		
			4 6	1.5 B	19
	576.71	-30			
End of Boring					
		-35			
		-40			

The Unconfined Compressive Strength (UCS) Failure Mode is indicated by (B-Bulge, S-Shear, P-Penetrometer)
The SPT (N value) is the sum of the last two blow values in each sampling zone (AASHTO T206)

BBS, form 137 (Rev. 8-99)

MODEL: $MODELNAME$
FILE NAME: G:\LP220720 IDOT D1 PTB 204-001 Michigan City Rd Bridge\03A Design\01 CADD\02 Sheets\Structures\Retaining Wall\D162R62-060-RW-Boring Log01.dgn

RW-11

DELTA ENGINEERING GROUP, LLC
CONSULTING ENGINEERS, CONSTRUCTION MANAGERS, SURVEYORS
111 W JACKSON BLVD. SUITE 910
CHICAGO, IL 60604
T 312.377.7700, F 312.427 6145

USER NAME = rmamucod	DESIGNED - RC	REVISED -	
	DRAWN - RM	REVISED -	
PLOT SCALE = 2:0.0000 ':" / in.	CHECKED - SMK	REVISED -	
PLOT DATE = 12/13/2024	DATE - 12/13/2024	REVISED -	

STATE OF ILLINOIS
DEPARTMENT OF TRANSPORTATION

SOIL BORING LOGS - 1

SCALE: SHEET OF SHEETS STA. TO STA.

F.A.I. RTE.	SECTION	COUNTY	TOTAL SHEETS	SHEET NO.
94	FAI 94 22 Structure 2	COOK	157	130

CONTRACT NO. 62R62

ILLINOIS | FED. AID PROJECT

Illinois Department of Transportation
Division of Highways
GSG

SOIL BORING LOG

Page 1 of 1

Date 9/20/23

ROUTE Michigan City Rd DESCRIPTION Retaining Wall Boring LOGGED BY AA

SECTION Michigan City Rd LOCATION , SEC. , TWP. , RNG. ,
Latitude 41.6216556, Longitude -087.5801028

COUNTY COOK DRILLING RIG CME 75 HAMMER TYPE AUTO
DRILLING METHOD HSA HAMMER EFF (%) 79.8

STRUCT. NO.
Station

BORING NO. RWB-03
Station 395+90.61
Offset 21.00ft LT
Ground Surface Elev. 607.90 ft

Surface Water Elev. N/A ft
Stream Bed Elev. N/A ft

Groundwater Elev.:
First Encounter 595.9 ft ▼
Upon Completion N/A ft
After N/A Hrs. N/A ft

Description	Elev.	DEPTH (ft)	BLOWS (/6")	UCS Qu (tsf)	MOIST (%)
10 inches of Concrete	607.07				
5 inches of Subbase	606.65				
Brown, Moist FILL: SAND			9 7 7		8
			5		
		-5	4 4		6
Brown, Dry FILL: SAND, with clay tiles fragments	601.90 600.40		3 1 20		4
Dark Brown & Gray, Wet FILL: SAND			4		
		-10	4 6		22
Medium Dense Light Brown, Wet SAND, (SP)	597.90		5		
		▼	8 9		24
			5		
		-15	12 15		29
Medium Dense Gray, Wet SAND, (SP)	591.90		5 6 11		30
Loose to Medium Dense Gray, Very Moist SILTY LOAM, (ML)	589.40	-20	7 7 9		22
Loose to Medium Dense Gray, Very Moist SILTY LOAM, (ML) *(continued)*			4		
	585.40		5 4		24
Medium Stiff Gray, Very Moist SILTY CLAY, (CL/ML)			WoH		
		-25	3 4	0.8 B	26
			WoH		
			2 3	1.0 B	36
			WoH		
	577.90	-30	2 4	0.8 B	37
Stiff Gray, Moist SILTY CLAY, (CL/ML)			3		
			5 5	1.3 B	20
			3		
	572.90	-35	5 6	1.9 B	22
End of Boring		-40			

The Unconfined Compressive Strength (UCS) Failure Mode is indicated by (B-Bulge, S-Shear, P-Penetrometer)
The SPT (N value) is the sum of the last two blow values in each sampling zone (AASHTO T206)

BBS, form 137 (Rev. 8-99)

Illinois Department of Transportation
Division of Highways
GSG

SOIL BORING LOG

Page 1 of 1

Date 9/20/23

ROUTE Michigan City Rd DESCRIPTION Retaining Wall Boring LOGGED BY AA

SECTION Michigan City Rd LOCATION , SEC. , TWP. , RNG. ,
Latitude 41.6215389, Longitude -087.5798917

COUNTY COOK DRILLING RIG CME 75 HAMMER TYPE AUTO
DRILLING METHOD HSA HAMMER EFF (%) 79.8

STRUCT. NO.
Station

BORING NO. RWB-04
Station 396+62.14
Offset 21.00ft LT
Ground Surface Elev. 609.33 ft

Surface Water Elev. N/A ft
Stream Bed Elev. N/A ft

Groundwater Elev.:
First Encounter 595.8 ft ▼
Upon Completion N/A ft
After N/A Hrs. N/A ft

Description	Elev.	DEPTH (ft)	BLOWS (/6")	UCS Qu (tsf)	MOIST (%)
10 inches of Concrete	608.49				
5 inches of Subbase	608.08		14		
Dark Brown, Moist FILL: SAND			19 19		12
			6		
		-5	11 11		15
			3		
	602.33		1 1		7
Very Loose to Medium Dense Light Brown, Moist to Wet SAND, (SP)			2		
		-10	2 3		7
			5		
			6 9		10
		▼	4		
		-15	10 17		25
	593.33		8		
Medium Dense Gray, Wet SAND, (SP)			13 11		24
	590.83		4		
Medium Dense to Dense Gray, Moist to Very Moist SILTY LOAM, (ML)		-20	7 11		23
Medium Dense to Dense Gray, Moist to Very Moist SILTY LOAM, (ML) *(continued)*			9		
			16 14		20
	585.83		4		
Very Stiff Gray, Moist to Very Moist SILTY CLAY, (CL/ML)			4 6	2.9 B	22
			3		
			4 6	2.5 B	24
			4		
		-30	4 5	2.5 B	30
			5		
			5 8	3.1 B	19
			3		
		-35	5 6	2.1 B	9
	569.33	-40	4 7	2.3 B	21

End of Boring

The Unconfined Compressive Strength (UCS) Failure Mode is indicated by (B-Bulge, S-Shear, P-Penetrometer)
The SPT (N value) is the sum of the last two blow values in each sampling zone (AASHTO T206)

BBS, form 137 (Rev. 8-99)

MODEL: $MODELNAME$
FILE NAME: G:\LP20720 IDOT D1 PTB 204-001 Michigan City Rd Bridge\03A Design\01 CADD\02 Sheets\Structures\Retaining Wall\D162R62-061-RW-Boring Log02.dgn

RW-12

DELTA ENGINEERING GROUP, LLC
CONSULTING ENGINEERS, CONSTRUCTION MANAGERS, SURVEYORS
111 W JACKSON BLVD. SUITE 910
CHICAGO, IL 60604
T 312.377.7700, F 312.427 6145

USER NAME = rmamucod	DESIGNED - RC	REVISED -	
	DRAWN - RM	REVISED -	
PLOT SCALE = 2:0.0000 ':" / in.	CHECKED - SMK	REVISED -	
PLOT DATE = 12/13/2024	DATE - 12/13/2024	REVISED -	

STATE OF ILLINOIS
DEPARTMENT OF TRANSPORTATION

SOIL BORING LOGS - 2

SCALE: SHEET OF SHEETS STA. TO STA.

F.A.I. RTE.	SECTION	COUNTY	TOTAL SHEETS	SHEET NO.
94	FAI 94 22 Structure 2	COOK	157	131
		CONTRACT NO. 62R62		
	ILLINOIS	FED. AID PROJECT		

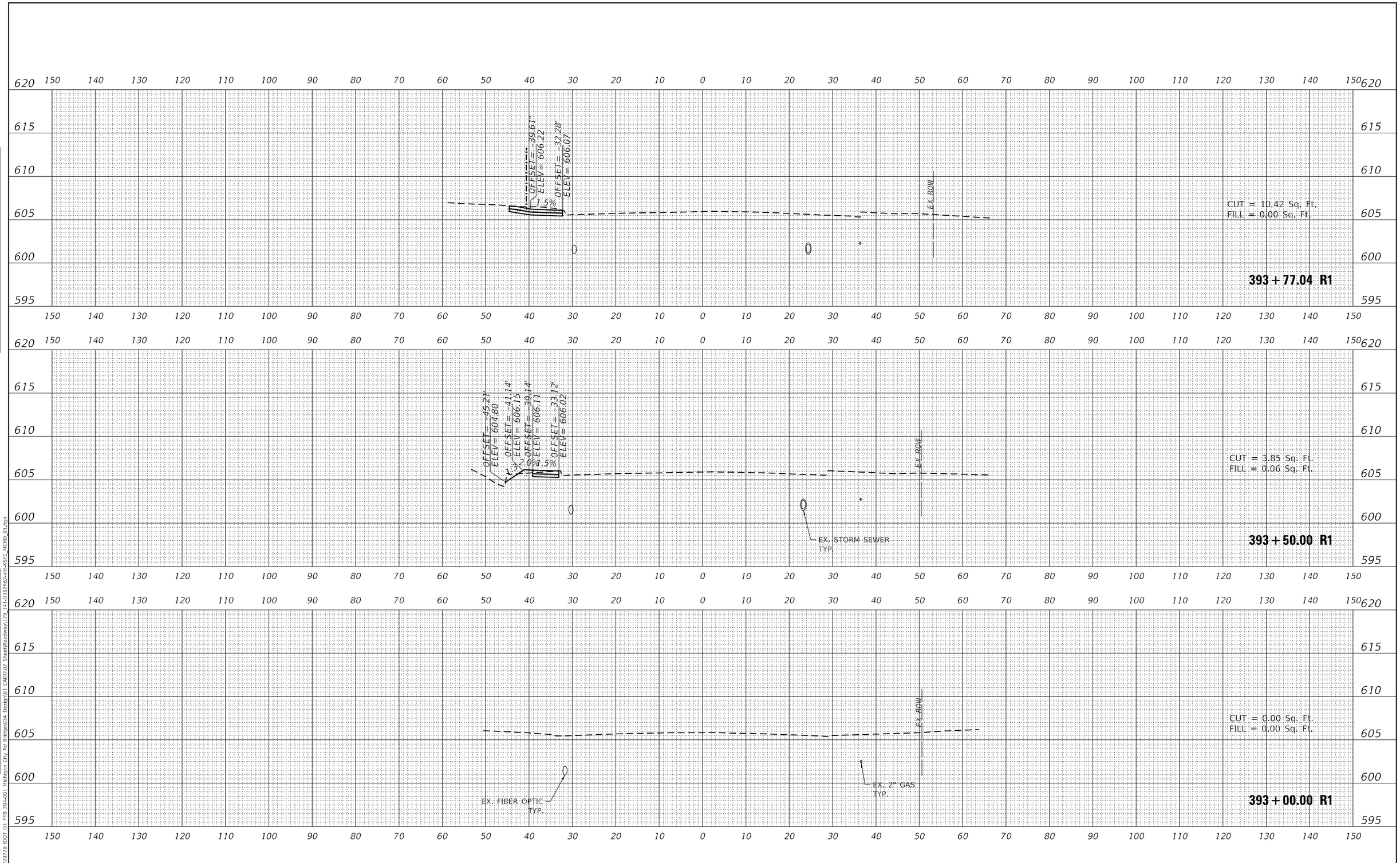

FINAL SURVEY	BY	DATE
SURVEYED		
PLOTTED		
TEMPLATE		
AREAS		
AREAS CHECKED		
NOTE BOOK NO.		

ORIGINAL SURVEY	BY	DATE
SURVEYED		
PLOTTED		
TEMPLATE		
AREAS		
AREAS CHECKED		
NOTE BOOK NO.		

MODEL: $MODEL$NAME$
FILE NAME: G:\P270720 IDOT D1 PTB 204-001 Michigan City Rd Bridge\03A Design\01 CADD\02 Sheet\Roadway\129_141-D162R62-sht-XSEC_MCRD_01.dgn

DELTA ENGINEERING GROUP, LLC
CONSULTING ENGINEERS, CONSTRUCTION MANAGERS, SURVEYORS
111 W JACKSON BLVD, SUITE 910
CHICAGO, IL 60604
T 312.377.7700, F 312.427.6145

USER NAME = denisb	DESIGNED - DB	REVISED -	
	DRAWN - DB	REVISED -	
PLOT SCALE = 20.0000 ' / in.	CHECKED - MA	REVISED -	
PLOT DATE = 12/13/2024	DATE - 12/13/2024	REVISED -	

STATE OF ILLINOIS
DEPARTMENT OF TRANSPORTATION

MICHIGAN CITY ROAD OVER I-94
PROPOSED CROSS SECTION

SCALE: 1:10 | SHEET 01 OF 13 SHEETS | STA. 393+00.00 R1 TO STA. 393+77.04 R1

F.A. RTE.	SECTION	COUNTY	TOTAL SHEETS	SHEET NO.
94	FAI 94 22 STRUCTURE 2	COOK	157	132
		CONTRACT NO. 62R62		
		ILLINOIS	FED. AID PROJECT	

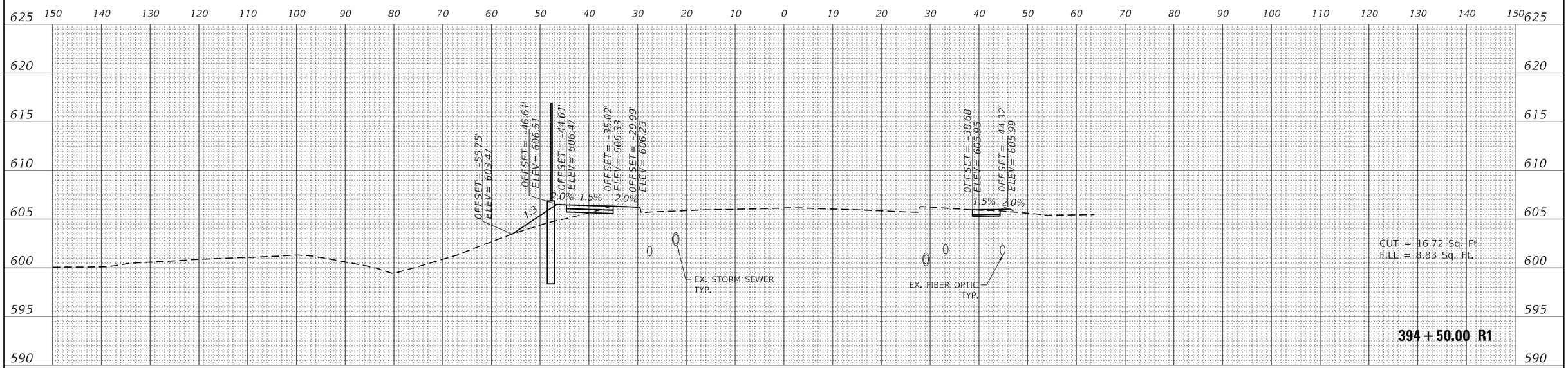

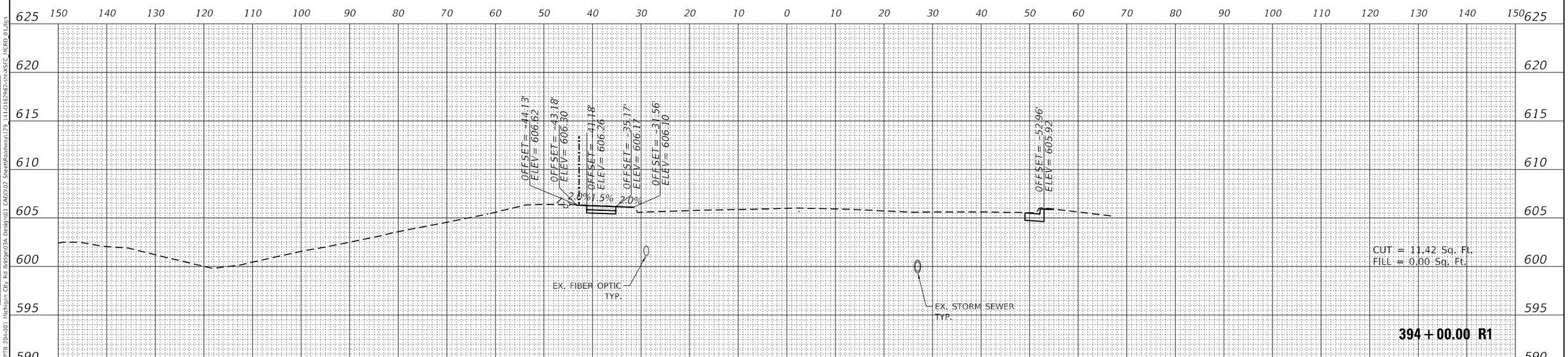

FINAL SURVEY	BY	DATE
SURVEYED		
PLOTTED		
TEMPLATE		
AREAS		
AREAS CHECKED		
NOTE BOOK NO.		

ORIGINAL SURVEY	BY	DATE
SURVEYED		
PLOTTED		
TEMPLATE		
AREAS		
AREAS CHECKED		
NOTE BOOK NO.		

MODEL: $MODEL$NAME$
FILE NAME: G:\P270720 IDOT D1 PTB 204-001 Michigan City Rd Bridge\03A Design\01 CAD\02 Sheet\Roadway\29_141-D162R62-sht-XSEC_MCRD_01.dgn

DELTA ENGINEERING GROUP, LLC
CONSULTING ENGINEERS, CONSTRUCTION MANAGERS, SURVEYORS
111 W JACKSON BLVD, SUITE 910
CHICAGO, IL 60604
T 312.377.7700, F 312.427.6145

USER NAME = denisb	DESIGNED - DB	REVISED -	
	DRAWN - DB	REVISED -	
PLOT SCALE = 20.0000 ' / in.	CHECKED - MA	REVISED -	
PLOT DATE = 12/13/2024	DATE - 12/13/2024	REVISED -	

STATE OF ILLINOIS
DEPARTMENT OF TRANSPORTATION

MICHIGAN CITY ROAD OVER I-94
PROPOSED CROSS SECTION

SCALE: 1:10 | SHEET 01 OF 13 SHEETS | STA. 394+00.00 R1 TO STA. 394+50.00 R1

F.A. RTE.	SECTION	COUNTY	TOTAL SHEETS	SHEET NO.
94	FAI 94 22 STRUCTURE 2	COOK	157	133
		CONTRACT NO. 62R62		
		ILLINOIS	FED. AID PROJECT	

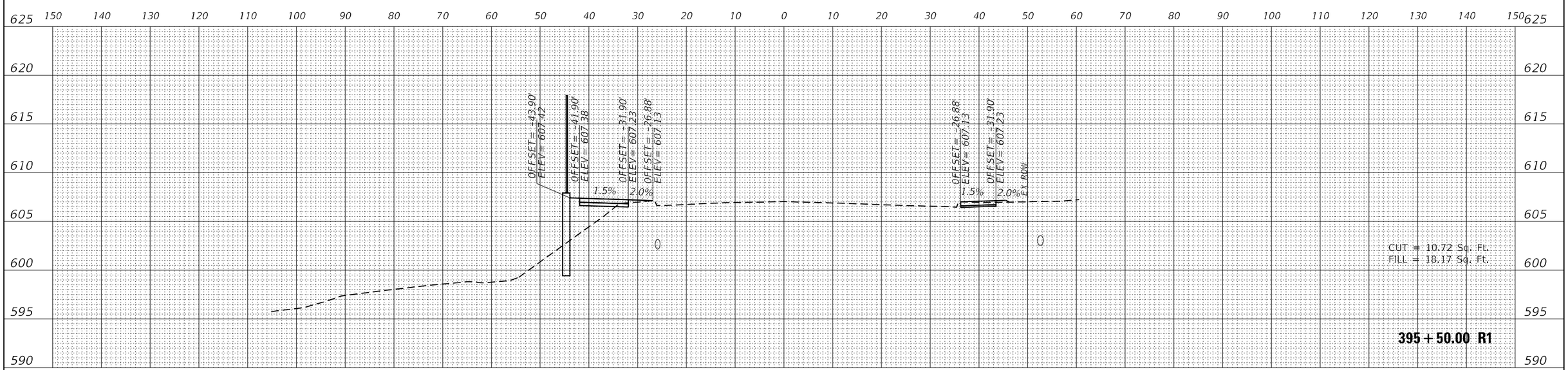

FINAL SURVEY		BY	DATE
SURVEYED			
PLOTTED			
TEMPLATE			
AREAS			
AREAS CHECKED			
NOTE BOOK			
NO.			

ORIGINAL SURVEY		BY	DATE
SURVEYED			
PLOTTED			
TEMPLATE			
AREAS			
AREAS CHECKED			
NOTE BOOK			
NO.			

MODEL: $MODELNAME
FILE NAME: G:\IP220720 IDOT D1 PTB 204-001 Michigan City Rd Bridge\03A Design\01 CADD\02 Sheet\Roadway\129 141-2\62R62-int-XSEC_MCRD_01.dgn

DELTA ENGINEERING GROUP, LLC
CONSULTING ENGINEERS, LANDSCAPE ARCHITECTS, SURVEYORS
111 W JACKSON BLVD, SUITE 910
CHICAGO, IL 60604
T 312.377.7700, F 312.427.6145

USER NAME = denisb	DESIGNED - DB	REVISED -	
	DRAWN - DB	REVISED -	
PLOT SCALE = 20.0000 ' / in.	CHECKED - MA	REVISED -	
PLOT DATE = 12/13/2024	DATE - 12/13/2024	REVISED -	

STATE OF ILLINOIS
DEPARTMENT OF TRANSPORTATION

MICHIGAN CITY ROAD OVER I-94
PROPOSED CROSS SECTION

SCALE: 1:10 | SHEET 01 OF 13 SHEETS | STA. 395+00.00 R1 TO STA. 395+50.00 R1

F.A. RTE.	SECTION	COUNTY	TOTAL SHEETS	SHEET NO.
94	FAI 94 22 STRUCTURE 2	COOK	157	134

CONTRACT NO. 62R62
ILLINOIS | FED. AID PROJECT

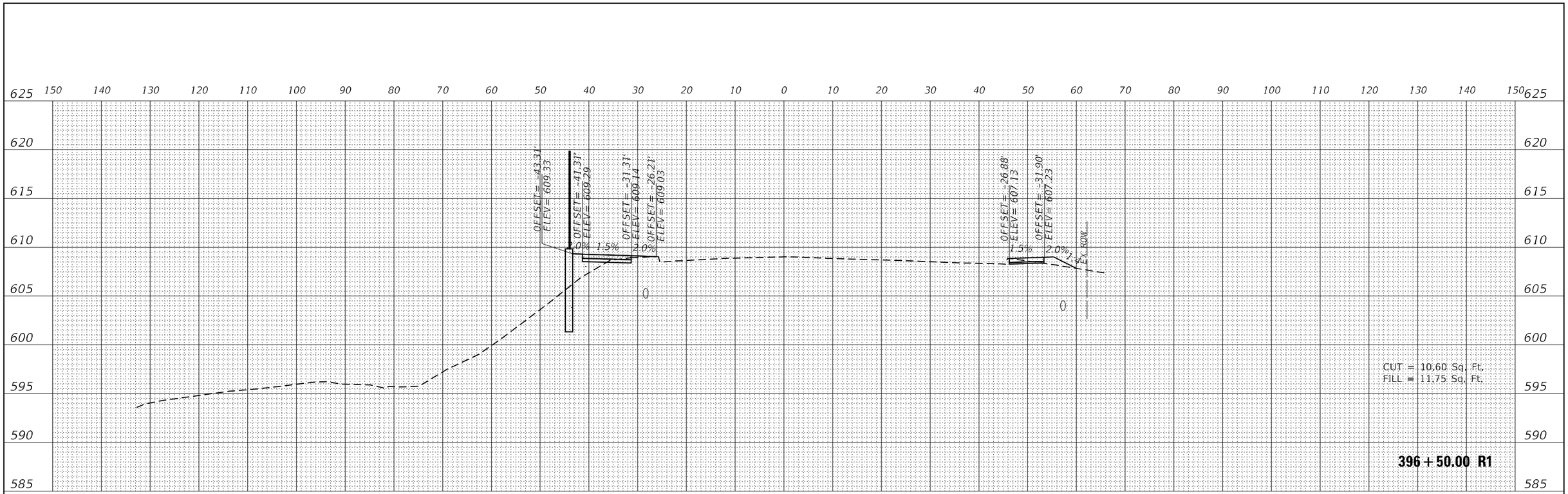

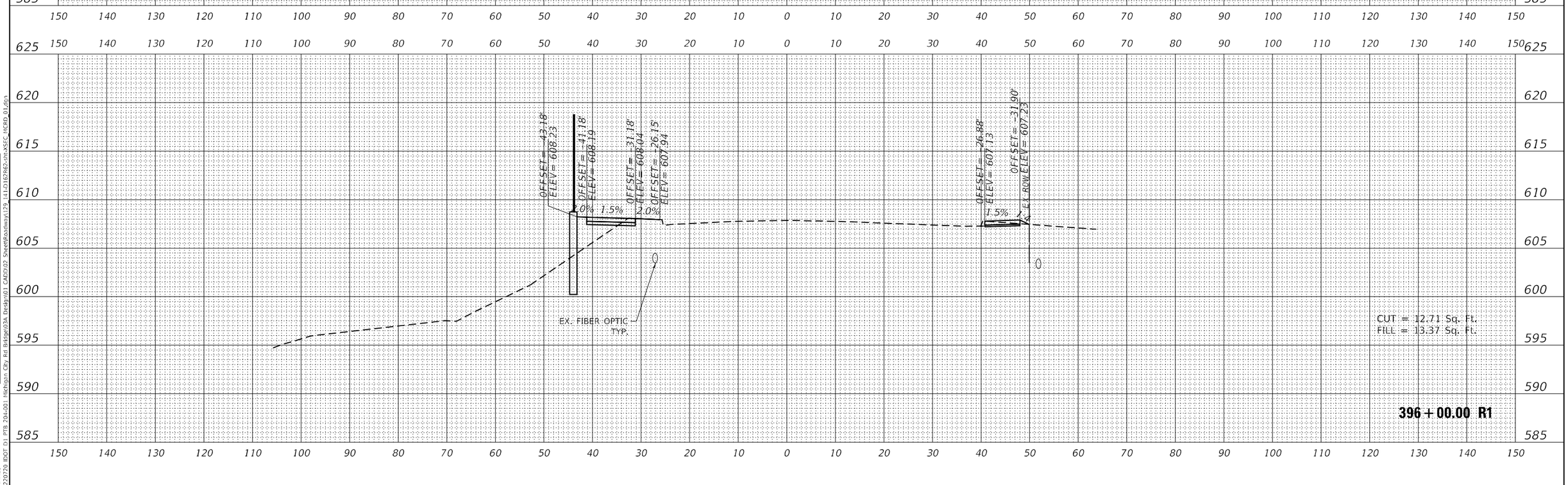

FINAL SURVEY	BY	DATE
SURVEYED		
PLOTTED		
TEMPLATE		
AREAS		
AREAS CHECKED		
NOTE BOOK NO.		

ORIGINAL SURVEY	BY	DATE
SURVEYED		
PLOTTED		
TEMPLATE		
AREAS		
AREAS CHECKED		
NOTE BOOK NO.		

MODEL: $MODELNAME$
FILE NAME: G:\P220720 IDOT D1 PTB 204-001 Michigan City Rd Bridge\03A Design\01 CADD\02 Sheet\Roadway\129 (4)-D162R62-sht-xSEC_MCRD_01.dgn

DELTA ENGINEERING GROUP, LLC
CONSULTING ENGINEERS, CONSTRUCTION MANAGERS, SURVEYORS
111 W JACKSON BLVD, SUITE 910
CHICAGO, IL 60604
T 312.377.7700, F 312.427.6145

USER NAME = denisb	DESIGNED - DB	REVISED -	
	DRAWN - DB	REVISED -	
PLOT SCALE = 20.0000 ' / in.	CHECKED - MA	REVISED -	
PLOT DATE = 12/13/2024	DATE - 12/13/2024	REVISED -	

STATE OF ILLINOIS
DEPARTMENT OF TRANSPORTATION

MICHIGAN CITY ROAD OVER I-94
PROPOSED CROSS SECTION

SCALE: 1:10 | SHEET 01 OF 13 SHEETS | STA. 396+00.00 R1 TO STA. 396+50.00 R1

F.A. RTE.	SECTION	COUNTY	TOTAL SHEETS	SHEET NO.
94	FAI 94 22 STRUCTURE 2	COOK	157	135
		CONTRACT NO. 62R62		
		ILLINOIS	FED. AID PROJECT	

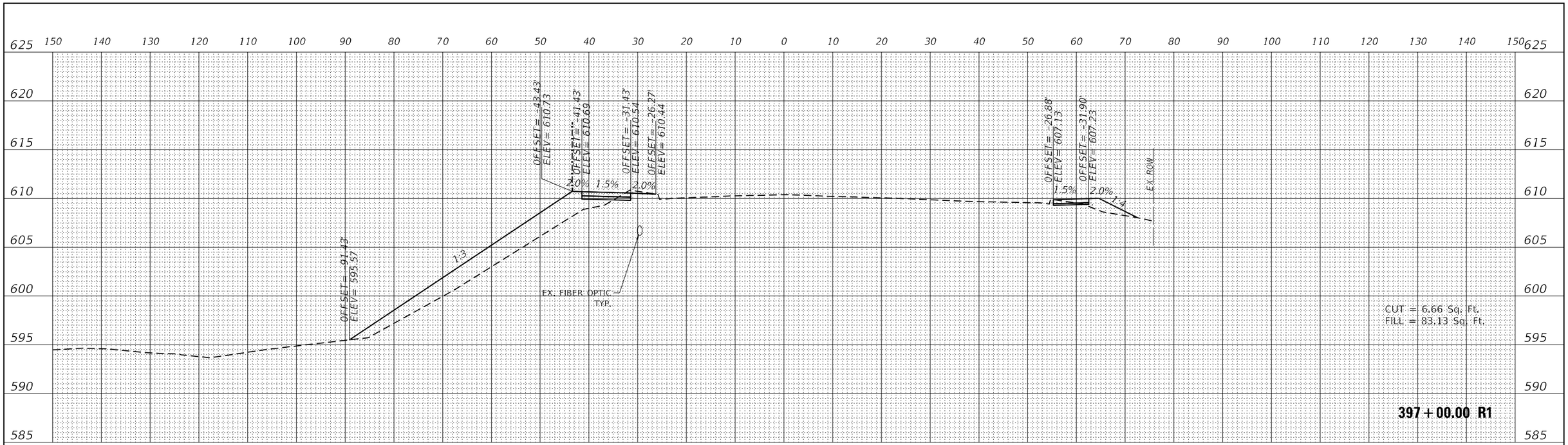

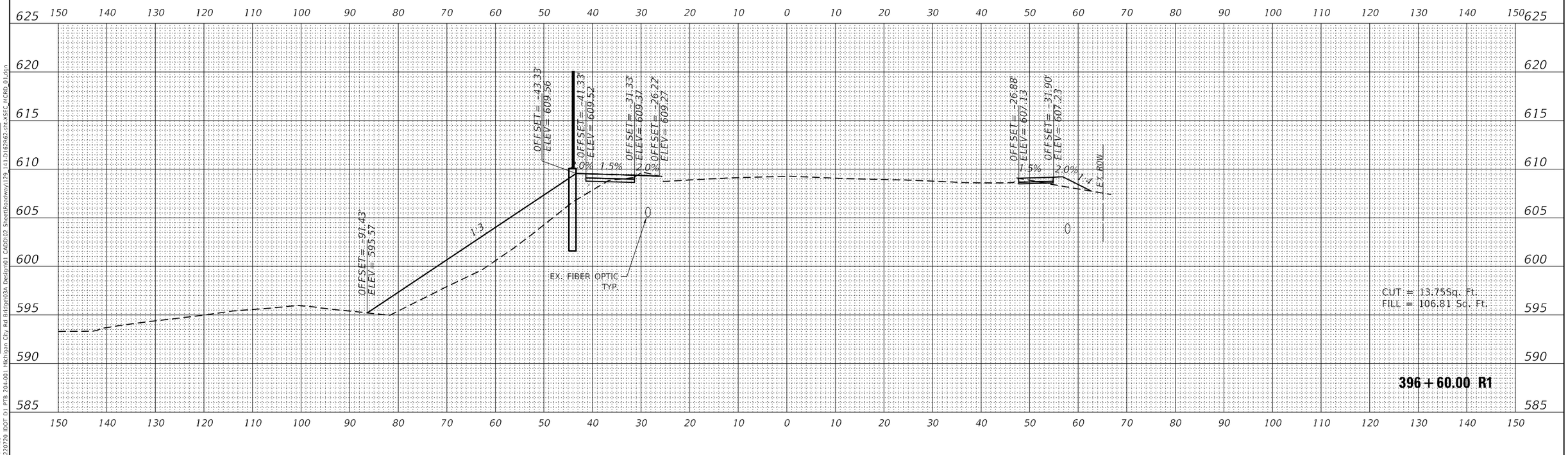

FINAL SURVEY	BY	DATE
SURVEYED		
PLOTTED		
TEMPLATE		
AREAS		
AREAS CHECKED		
NOTE BOOK NO.		

ORIGINAL SURVEY	BY	DATE
SURVEYED		
PLOTTED		
TEMPLATE		
AREAS		
AREAS CHECKED		
NOTE BOOK NO.		

MODEL: SMODELNAME5
FILE NAME: G:\P220720 IDOT D1 PTB 204-001 Michigan City Rd Bridge\03A Design\01 CADD\02 Sheet\Roadway\29 141-D162R62-sht-xSEC_MCRD 01.dgn

DELTA ENGINEERING GROUP, LLC
CONSULTING ENGINEERS, LANDSCAPE ARCHITECTS, SURVEYORS
111 W JACKSON BLVD, SUITE 910
CHICAGO, IL 60604
T 312.377.7700, F 312.427.6145

USER NAME = denisb	DESIGNED - DB	REVISED -	
	DRAWN - DB	REVISED -	
PLOT SCALE = 20.0000 ' / in.	CHECKED - MA	REVISED -	
PLOT DATE = 12/13/2024	DATE - 12/13/2024	REVISED -	

STATE OF ILLINOIS
DEPARTMENT OF TRANSPORTATION

MICHIGAN CITY ROAD OVER I-94
PROPOSED CROSS SECTION

SCALE: 1:10 | SHEET 01 OF 13 SHEETS | STA. 396+60.00 R1 TO STA. 397+00.00 R1

F.A. RTE.	SECTION	COUNTY	TOTAL SHEETS	SHEET NO.
94	FAI 94 22 STRUCTURE 2	COOK	157	136
		CONTRACT NO. 62R62		
		ILLINOIS	FED. AID PROJECT	

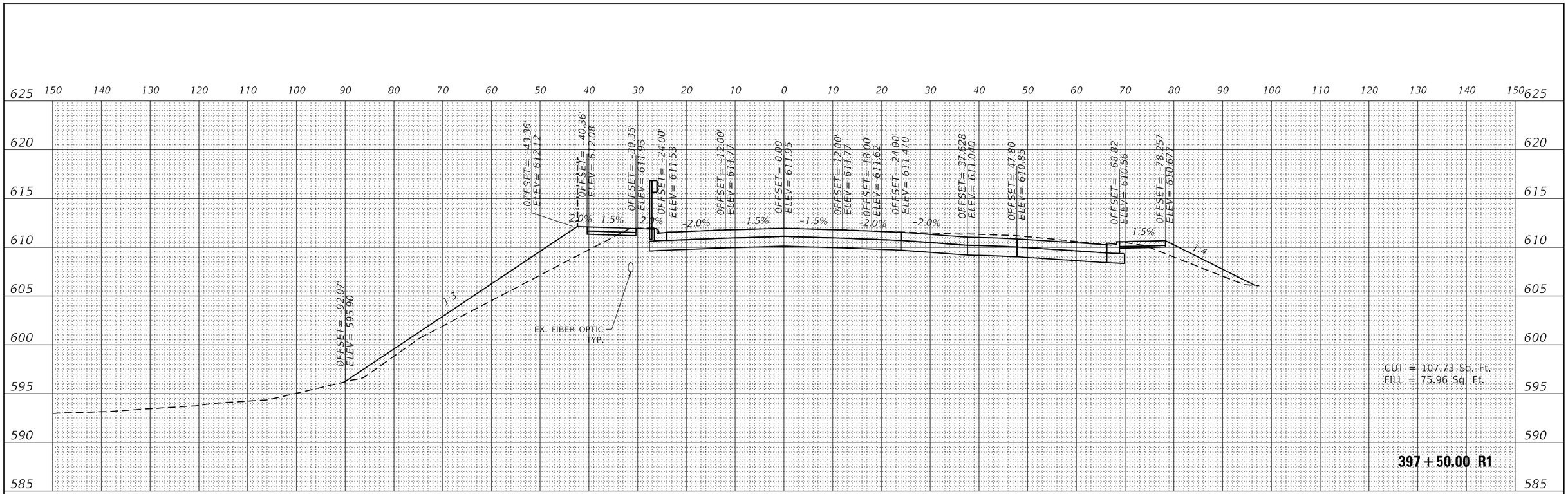

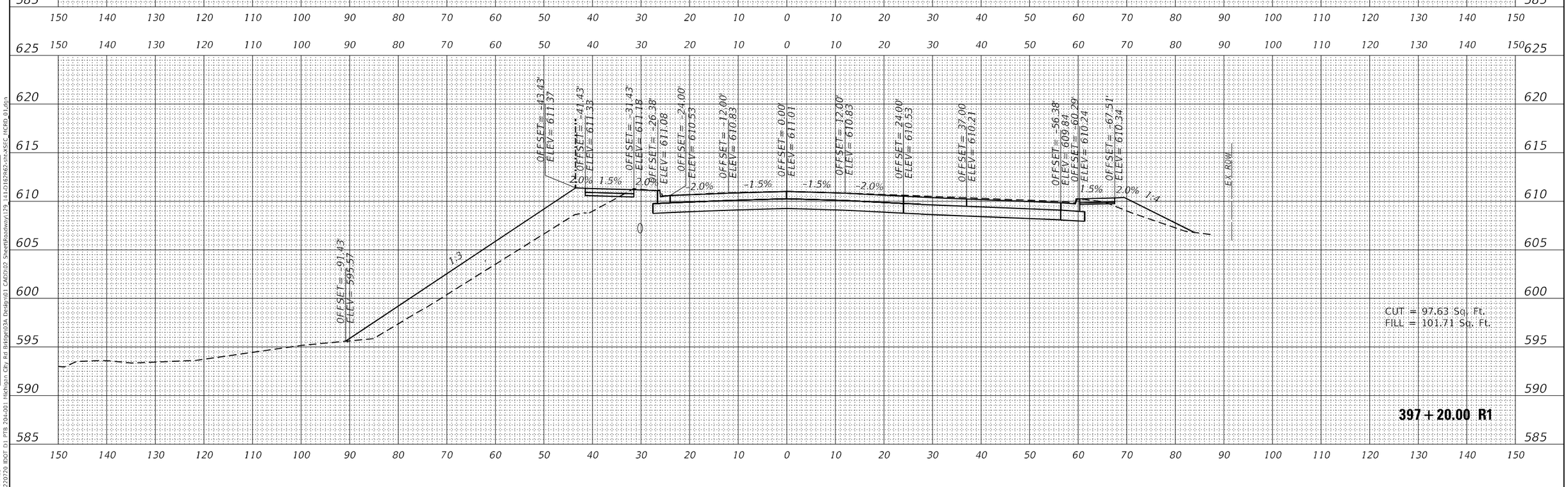

FINAL SURVEY	BY	DATE
SURVEYED		
PLOTTED		
TEMPLATE		
AREAS		
AREAS CHECKED		
NOTE BOOK NO.		

ORIGINAL SURVEY	BY	DATE
SURVEYED		
PLOTTED		
TEMPLATE		
AREAS		
AREAS CHECKED		
NOTE BOOK NO.		

MODEL: SMODELNAME5
FILE NAME: G:\P220720 IDOT D1 PTB 204-001 Michigan City Rd Bridge\03A Design\01 CADD\02 Sheet\Roadway\29 141-D162R62-sht-xSEC (RCRD 01.dgn

DELTA ENGINEERING GROUP, LLC
CONSULTING ENGINEERS, LANDSCAPE ARCHITECTS, SURVEYORS
111 W JACKSON BLVD, SUITE 910
CHICAGO, IL 60604
T 312.377.7700, F 312.427.6145

USER NAME = denisb	DESIGNED - DB	REVISED -	
	DRAWN - DB	REVISED -	
PLOT SCALE = 20.0000 ' / in.	CHECKED - MA	REVISED -	
PLOT DATE = 12/13/2024	DATE - 12/13/2024	REVISED -	

STATE OF ILLINOIS
DEPARTMENT OF TRANSPORTATION

MICHIGAN CITY ROAD OVER I-94
PROPOSED CROSS SECTION

SCALE: 1:10 | SHEET 01 OF 13 SHEETS | STA. 397+20.00 R1 TO STA. 397+50.00 R1

F.A. RTE.	SECTION	COUNTY	TOTAL SHEETS	SHEET NO.
94	FAI 94 22 STRUCTURE 2	COOK	157	137
		CONTRACT NO. 62R62		
		ILLINOIS	FED. AID PROJECT	

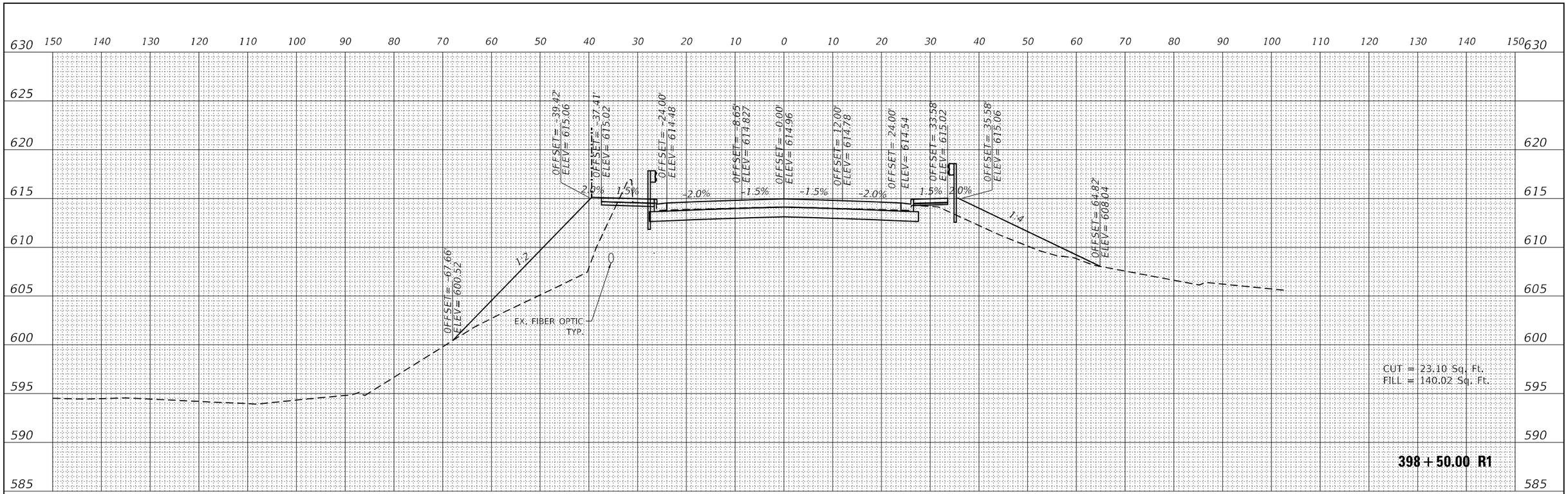

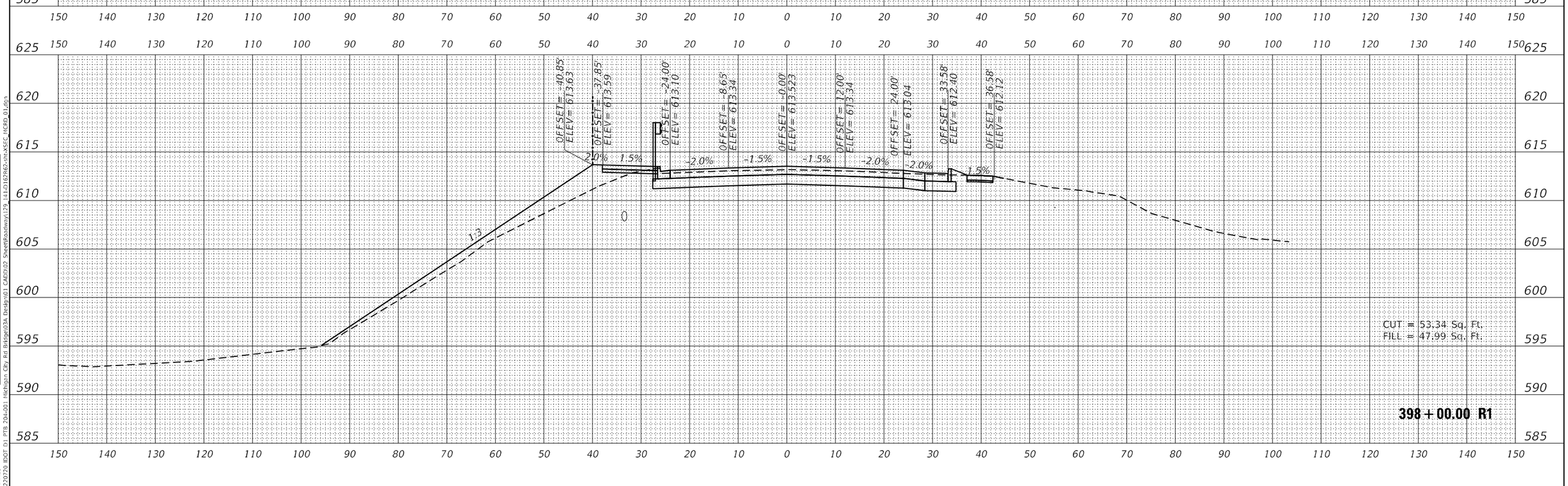

FINAL SURVEY	BY	DATE
SURVEYED		
PLOTTED		
TEMPLATE		
AREAS		
AREAS CHECKED		
NOTE BOOK		
NO.		

ORIGINAL SURVEY	BY	DATE
SURVEYED		
PLOTTED		
TEMPLATE		
AREAS		
AREAS CHECKED		
NOTE BOOK		
NO.		

MODEL: $MODELNAME$
FILE NAME: G:\P220720 IDOT D1 PTB 204-001 Michigan City Rd Bridge\03A Design\01 CAD\02 Sheet\Roadway\129 141-D162R62-sht-xSEC (MCRD 01.dgn

DELTA ENGINEERING GROUP, LLC
CONSULTING ENGINEERS, LANDSCAPE ARCHITECTS, SURVEYORS
111 W JACKSON BLVD, SUITE 910
CHICAGO, IL 60604
T 312.377.7700, F 312.427.6145

USER NAME = denisb	DESIGNED - DB	REVISED -	
	DRAWN - DB	REVISED -	
PLOT SCALE = 20.0000 ' / in.	CHECKED - MA	REVISED -	
PLOT DATE = 12/13/2024	DATE - 12/13/2024	REVISED -	

STATE OF ILLINOIS
DEPARTMENT OF TRANSPORTATION

MICHIGAN CITY ROAD OVER I-94
PROPOSED CROSS SECTION

SCALE: 1:10 | SHEET 01 OF 13 SHEETS | STA. 398+00.00 R1 TO STA. 398+50.00 R1

F.A. RTE.	SECTION	COUNTY	TOTAL SHEETS	SHEET NO.
94	FAI 94 22 STRUCTURE 2	COOK	157	138
		CONTRACT NO. 62R62		
		ILLINOIS	FED. AID PROJECT	

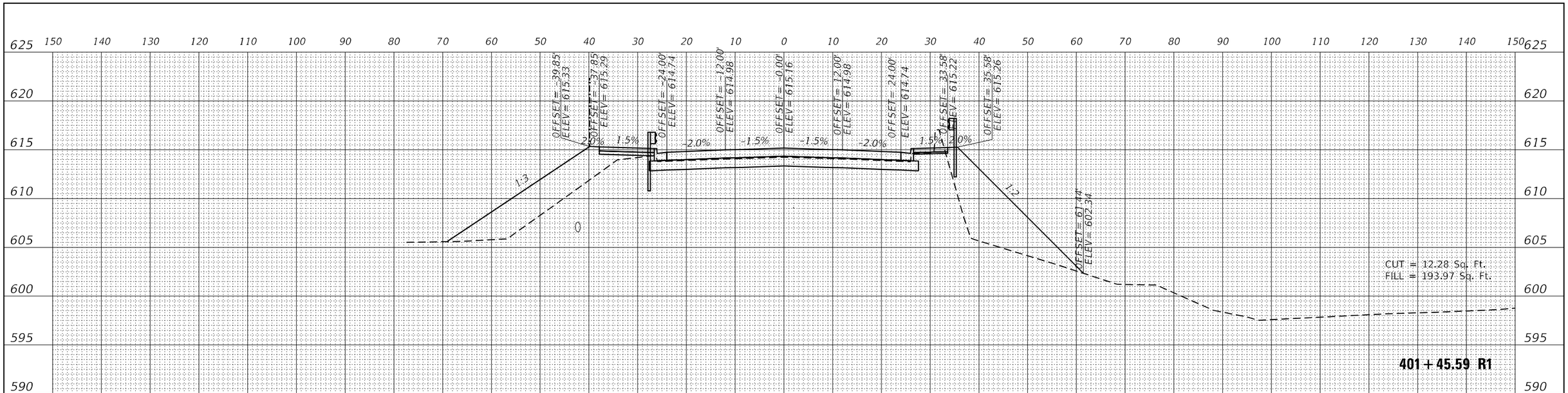

BRIDGE OMISSION

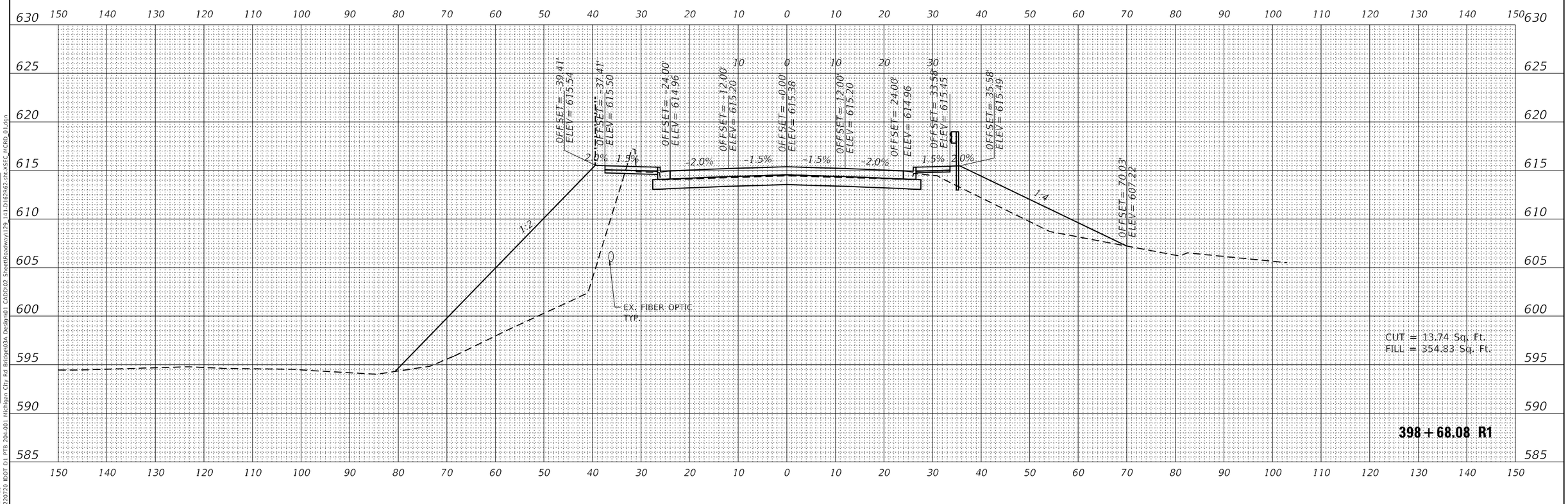

FINAL SURVEY	BY	DATE
SURVEYED		
PLOTTED		
TEMPLATE		
AREAS		
AREAS CHECKED		
NOTE BOOK		
NO.		

ORIGINAL SURVEY	BY	DATE
SURVEYED		
PLOTTED		
TEMPLATE		
AREAS		
AREAS CHECKED		
NOTE BOOK		
NO.		

MODEL: $MODELNAME$
FILE NAME: G:\LP220720 IDOT D1 PTB 204-001 Michigan City Rd Bridge\03A Design\01 CAD\02 Sheet\Roadway\129_141-0162R62-sht-xSEC_IMCRD_01.dgn

DELTA ENGINEERING GROUP, LLC
CONSULTING ENGINEERS, CONSTRUCTION MANAGERS, SURVEYORS
111 W JACKSON BLVD, SUITE 910
CHICAGO, IL 60604
T 312.377.7700, F 312.427.6145

USER NAME = denisb	DESIGNED - DB	REVISED -
	DRAWN - DB	REVISED -
PLOT SCALE = 20.0000 ' / in.	CHECKED - MA	REVISED -
PLOT DATE = 12/13/2024	DATE - 12/13/2024	REVISED -

STATE OF ILLINOIS
DEPARTMENT OF TRANSPORTATION

MICHIGAN CITY ROAD OVER I-94
PROPOSED CROSS SECTION

SCALE: 1:10 | SHEET 01 OF 13 SHEETS | STA. 398+68.08 R1 TO STA. 401+45.59 R1

F.A. RTE.	SECTION	COUNTY	TOTAL SHEETS	SHEET NO.
94	FAI 94 22 STRUCTURE 2	COOK	157	139
		CONTRACT NO. 62R62		
		ILLINOIS	FED. AID PROJECT	

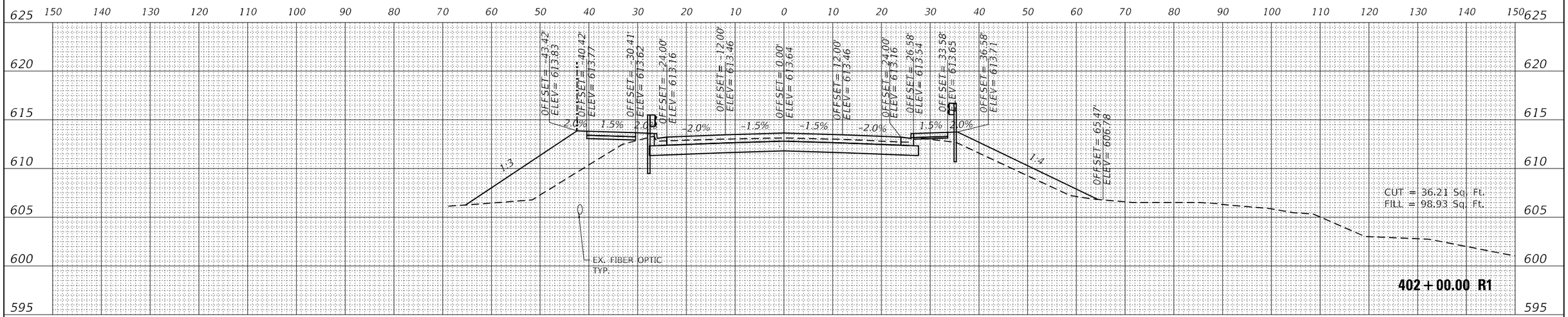

FINAL SURVEY	BY	DATE
SURVEYED		
PLOTTED		
TEMPLATE		
AREAS		
AREAS CHECKED		
NOTE BOOK		
NO.		

ORIGINAL SURVEY	BY	DATE
SURVEYED		
PLOTTED		
TEMPLATE		
AREAS		
AREAS CHECKED		
NOTE BOOK		
NO.		

MODEL: $MODELNAME
FILE NAME: G:\LP\220720 IDOT D1 PTB 204-001 Michigan City Rd Bridge\03A Design\01 CADD\02 Sheet\Roadway\129 141-D162R62-sht-XSEC_HCRD_01.dgn

DELTA ENGINEERING GROUP, LLC
CONSULTING ENGINEERS, LANDSCAPE ARCHITECTS, SURVEYORS
111 W JACKSON BLVD, SUITE 910
CHICAGO, IL 60604
T 312.377.7700, F 312.427.6145

USER NAME = denisb	DESIGNED - DB	REVISED -	
	DRAWN - DB	REVISED -	
PLOT SCALE = 20.0000 ' / in.	CHECKED - MA	REVISED -	
PLOT DATE = 12/13/2024	DATE - 12/13/2024	REVISED -	

STATE OF ILLINOIS
DEPARTMENT OF TRANSPORTATION

MICHIGAN CITY ROAD OVER I-94
PROPOSED CROSS SECTION

SCALE: 1:10 | SHEET 01 OF 13 SHEETS | STA. 401+50.00 R1 TO STA. 402+00.00 R1

F.A. RTE.	SECTION	COUNTY	TOTAL SHEETS	SHEET NO.
94	FAI 94 22 STRUCTURE 2	COOK	157	140

CONTRACT NO. 62R62
ILLINOIS | FED. AID PROJECT

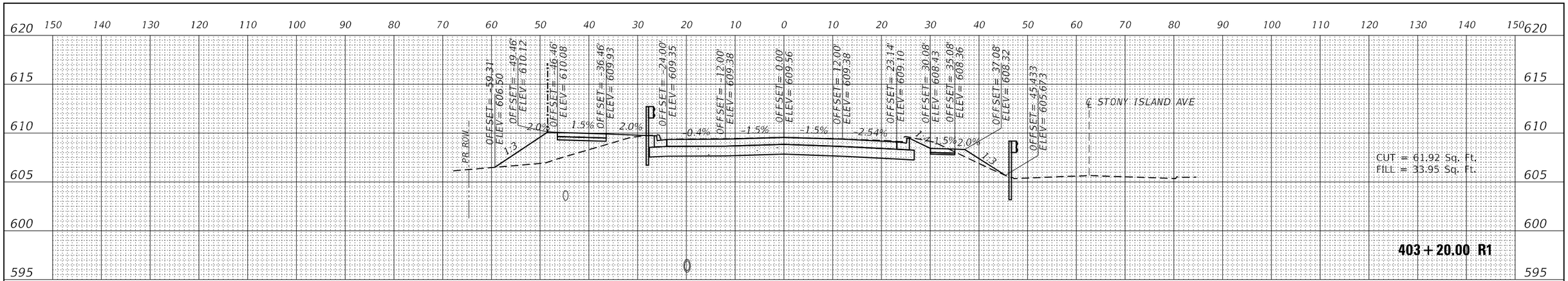

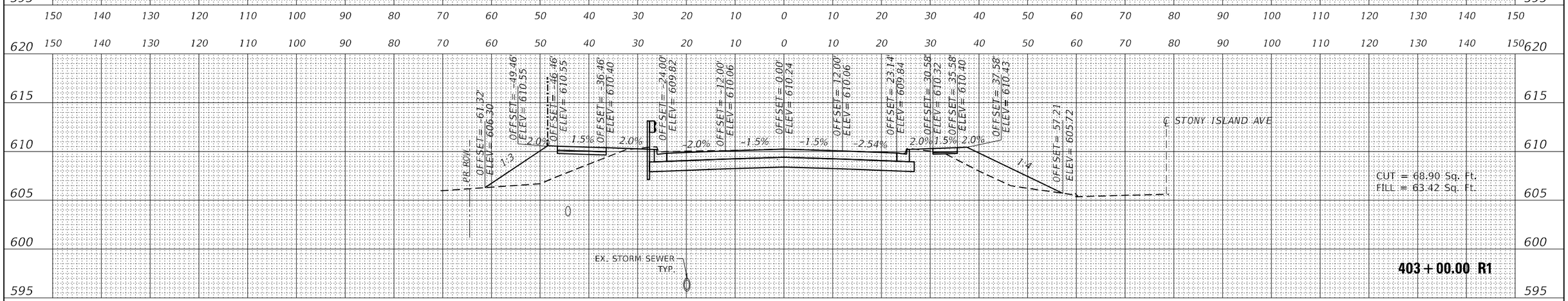

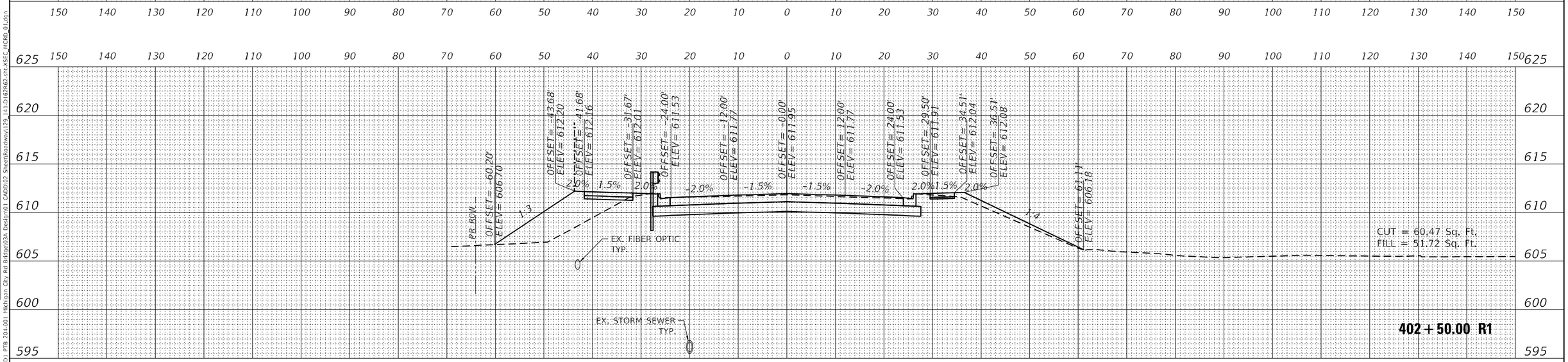

FINAL SURVEY		BY	DATE
SURVEYED			
PLOTTED			
TEMPLATE			
AREAS			
AREAS CHECKED			
NOTE BOOK NO.			

ORIGINAL SURVEY		BY	DATE
SURVEYED			
PLOTTED			
TEMPLATE			
AREAS			
AREAS CHECKED			
NOTE BOOK NO.			

MODEL: SMODELNAME5
FILE NAME: G:\P20720 IDOT D1 PTB 204-001 Michigan City Rd Bridge\03A Design\01 CAD\02 Sheet\Roadway\129 141-D162R62-sht-xSEC MCRD 01.dgn

DELTA ENGINEERING GROUP, LLC
CONSULTING ENGINEERS, CONSTRUCTION MANAGERS, SURVEYORS
111 W JACKSON BLVD, SUITE 910
CHICAGO, IL 60604
T 312.377.7700, F 312.427.6145

USER NAME = denisb	DESIGNED - DB	REVISED -
	DRAWN - DB	REVISED -
PLOT SCALE = 20.0000 ' / in.	CHECKED - MA	REVISED -
PLOT DATE = 12/13/2024	DATE - 12/13/2024	REVISED -

STATE OF ILLINOIS
DEPARTMENT OF TRANSPORTATION

MICHIGAN CITY ROAD OVER I-94
PROPOSED CROSS SECTION

SCALE: 1:10 | SHEET 01 OF 13 SHEETS | STA. 402+50.00 R1 TO STA. 403+20.00 R1

F.A. RTE.	SECTION	COUNTY	TOTAL SHEETS	SHEET NO.
94	FAI 94 22 STRUCTURE 2	COOK	157	141
		CONTRACT NO. 62R62		
		ILLINOIS	FED. AID PROJECT	

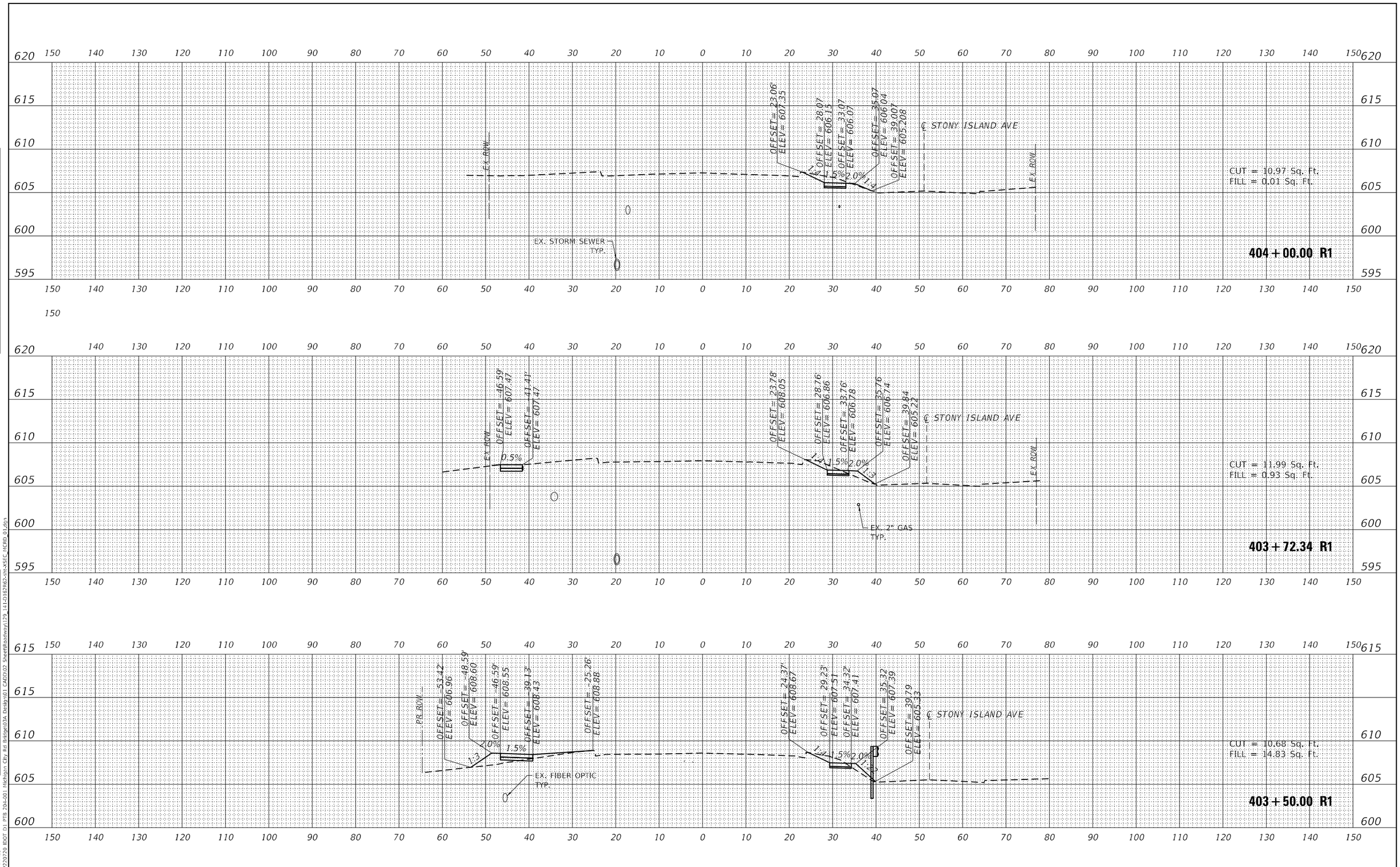

FINAL SURVEY		BY	DATE
NOTE BOOK	SURVEYED		
	PLOTTED		
	TEMPLATE		
	AREAS		
	AREAS CHECKED		
NO.			

ORIGINAL SURVEY		BY	DATE
NOTE BOOK	SURVEYED		
	PLOTTED		
	TEMPLATE		
	AREAS		
	AREAS CHECKED		
NO.			

MODEL: $MODEL$NAME5
FILE NAME: G:\IDOT D1 PTB 204-001 Michigan City Rd Bridge\03A Design\01 CADD\02 Sheets\Roadway\129 141-D162R62-sht-xSEC_MCRD_01.dgn

DELTA ENGINEERING GROUP, LLC
CONSULTING ENGINEERS, LANDSCAPE ARCHITECTS, SURVEYORS
111 W JACKSON BLVD, SUITE 910
CHICAGO, IL 60604
T 312.377.7700, F 312.427.6145

USER NAME = denisb	DESIGNED - DB	REVISED -	
	DRAWN - DB	REVISED -	
PLOT SCALE = 20.0000 ' / in.	CHECKED - MA	REVISED -	
PLOT DATE = 12/13/2024	DATE - 12/13/2024	REVISED -	

STATE OF ILLINOIS
DEPARTMENT OF TRANSPORTATION

MICHIGAN CITY ROAD OVER I-94
PROPOSED CROSS SECTION

SCALE: 1:10 | SHEET 01 OF 13 SHEETS | STA. 403+50.00 R1 TO STA. 404+00.00 R1

F.A. RTE.	SECTION	COUNTY	TOTAL SHEETS	SHEET NO.
94	FAI 94 22 STRUCTURE 2	COOK	157	142
		CONTRACT NO. 62R62		
		ILLINOIS	FED. AID PROJECT	

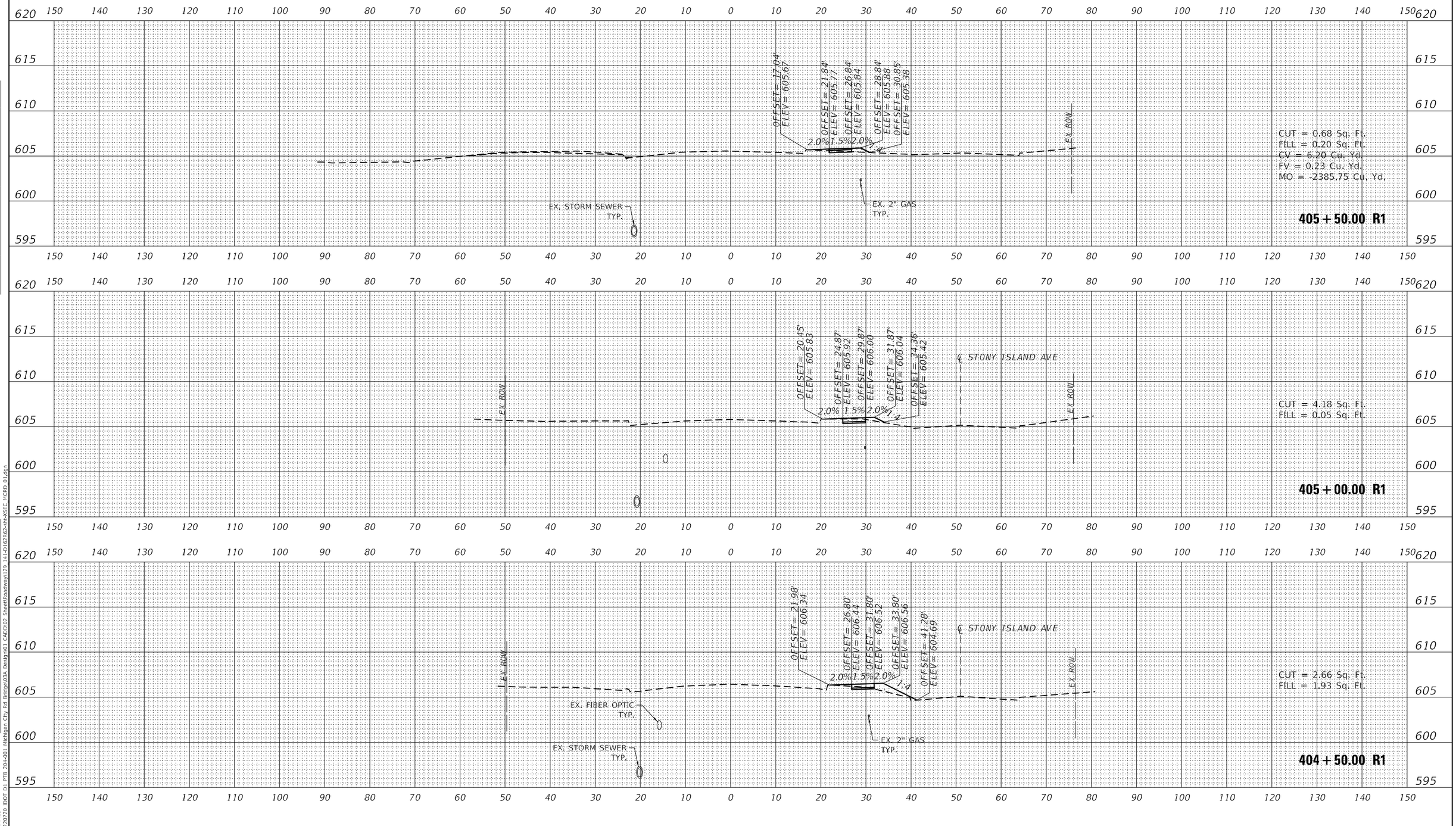

FINAL SURVEY	BY	DATE
SURVEYED		
PLOTTED		
TEMPLATE		
AREAS		
AREAS CHECKED		
NOTE BOOK		
NO.		

ORIGINAL SURVEY	BY	DATE
SURVEYED		
PLOTTED		
TEMPLATE		
AREAS		
AREAS CHECKED		
NOTE BOOK		
NO.		

MODEL: $MODELNAME$
FILE NAME: G:\LP\P230720 IDOT D1 PTB 204-001 Michigan City Rd Bridge\03A Design\01 CAD\02 Sheet\Roadway\129_141-D162862-sht-XSEC_HCRD_01.dgn

DELTA ENGINEERING GROUP, LLC
CONSULTING ENGINEERS, CONSTRUCTION MANAGERS, SURVEYORS
111 W JACKSON BLVD, SUITE 910
CHICAGO, IL 60604
T 312.377.7700, F 312.427.6145

USER NAME = denisb	DESIGNED - DB	REVISED -
	DRAWN - DB	REVISED -
PLOT SCALE = 20.0000 ' / in.	CHECKED - MA	REVISED -
PLOT DATE = 12/13/2024	DATE - 12/13/2024	REVISED -

STATE OF ILLINOIS
DEPARTMENT OF TRANSPORTATION

MICHIGAN CITY ROAD OVER I-94
PROPOSED CROSS SECTION

SCALE: 1:10 | SHEET 12 OF 13 SHEETS | STA. 404+50.00 R1 TO STA. 405+50.00 R1

F.A. RTE.	SECTION	COUNTY	TOTAL SHEETS	SHEET NO.
94	FAI 94 22 STRUCTURE 2	COOK	157	143

CONTRACT NO. 62R62

ILLINOIS | FED. AID PROJECT

FINAL SURVEY		BY	DATE
	SURVEYED		
	PLOTTED		
NOTE BOOK	TEMPLATE		
	AREAS		
NO.	AREAS CHECKED		

ORIGINAL SURVEY		BY	DATE
	SURVEYED		
	PLOTTED		
NOTE BOOK	TEMPLATE		
	AREAS		
NO.	AREAS CHECKED		

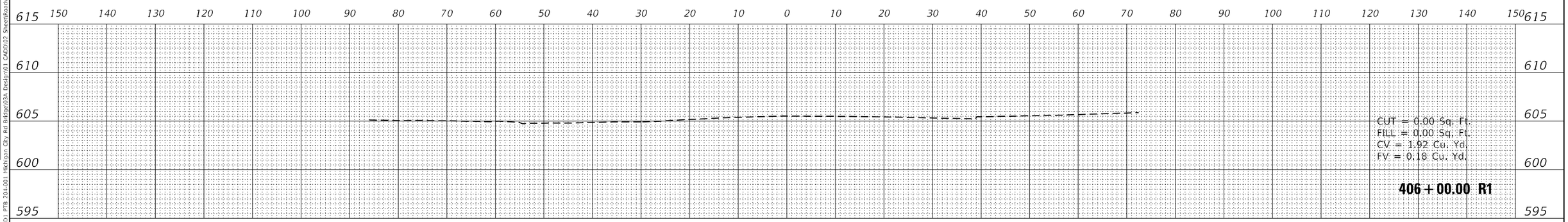

MODEL: $MODEL NAME$
FILE NAME: G:\P270720 IDOT D1 PTB 204-001 Michigan City Rd Bridge\03A Design\01 CADD\02 Sheet\Roadway\129_141-D162R62-sht-XSEC_MCRD_01.dgn

DELTA ENGINEERING GROUP, LLC
CONSULTING ENGINEERS, CONSTRUCTION MANAGERS, SURVEYORS
111 W JACKSON BLVD. SUITE 910
CHICAGO, IL 60604
T 312.377.7700, F 312.427.6145

USER NAME = denisb	DESIGNED - DB	REVISED -	
	DRAWN - DB	REVISED -	
PLOT SCALE = 20.0000 ' / in.	CHECKED - MA	REVISED -	
PLOT DATE = 12/13/2024	DATE - 12/13/2024	REVISED -	

STATE OF ILLINOIS
DEPARTMENT OF TRANSPORTATION

MICHIGAN CITY ROAD OVER I-94
PROPOSED CROSS SECTION

SCALE: 1:10 | SHEET 13 OF 13 SHEETS | STA. 406+00.00 R1 TO STA. 406+00.00 R1

F.A. RTE.	SECTION	COUNTY	TOTAL SHEETS	SHEET NO.
94	FAI 94 22 STRUCTURE 2	COOK	157	144
		CONTRACT NO. 62R62		
		ILLINOIS	FED. AID PROJECT	

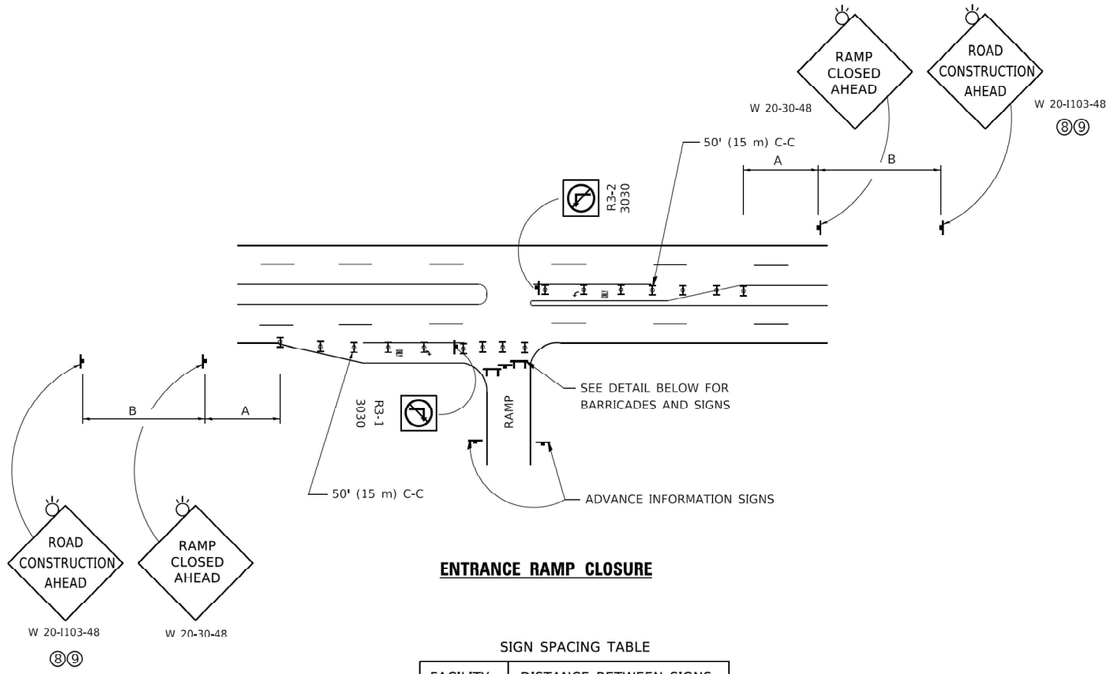

ENTRANCE RAMP CLOSURE

SIGN SPACING TABLE

FACILITY	DISTANCE BETWEEN SIGNS A	DISTANCE BETWEEN SIGNS B
EXPRESSWAY >24 HOURS	1000' (300 m)	1500' (450 m)
EXPRESSWAY ≤24 HOURS	500' (150 m)	500' (150 m)
ARTERIAL 55 MPH	500' (150 m)	500' (150 m)
ARTERIAL 50-45 MPH	350' (100 m)	350' (100 m)
ARTERIAL <45 MPH	200' (60 m)	200' (60 m)

DISTANCES MAY BE SHORTENED DEPENDING UPON THE PROXIMITY OF ADJACENT RAMPS OR INTERSECTIONS.

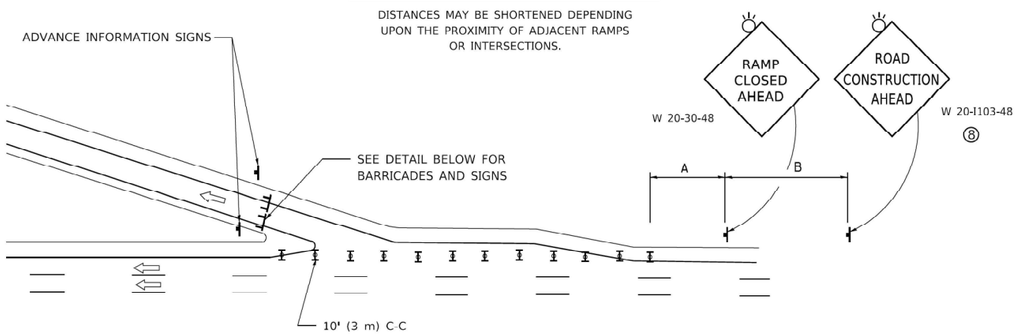

EXIT RAMP CLOSURE

SYMBOLS

TYPE II BARRICADE OR DRUM

TYPE III BARRICADE WITH 2 FLASHING LIGHTS

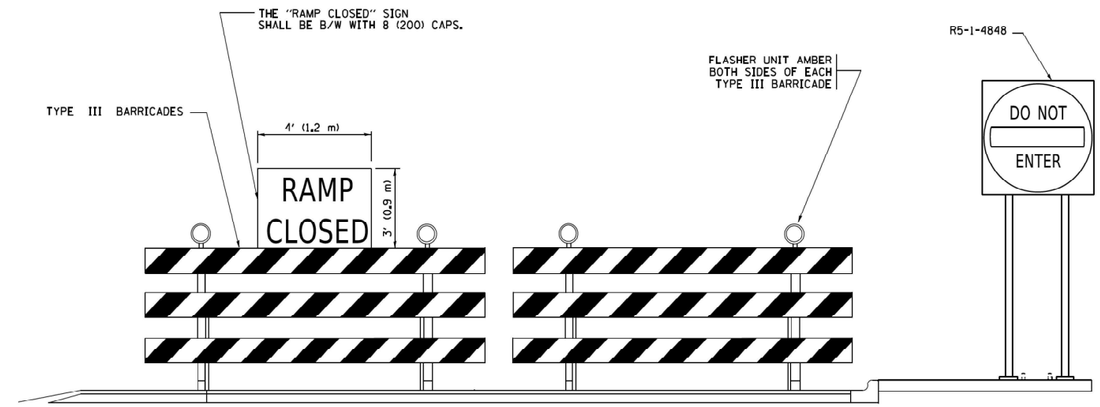

DETAIL FOR REQUIRED BARRICADES & SIGNS

RAMP CLOSURE ADVANCE WARNING SIGN

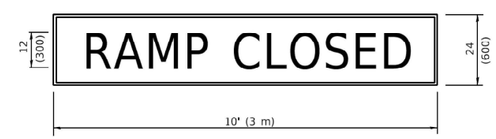

BLACK LEGEND ON ORANGE BACKGROUND MOUNTED DIAGONALLY
E MOD FONT
1 (25) BORDER

THESE SIGNS ARE REQUIRED ON ALL THE EXIT GUIDE SIGNS FOR EXIT RAMPS THAT WILL BE CLOSED FOR MORE THAN FOUR (4) CONSECUTIVE DAYS.

RAMP CLOSURE ADVANCE INFORMATION SIGN

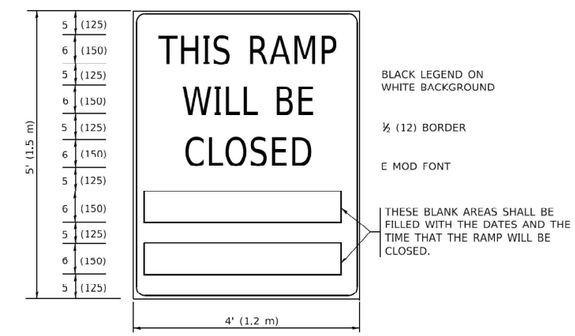

THESE SIGNS ARE REQUIRED ON BOTH SIDES OF THE RAMP, MINIMUM OF 1 WEEK IN ADVANCE OF THE CLOSURE.

THESE SIGNS SHALL BE FABRICATED AND PAID FOR ACCORDING TO THE TEMPORARY INFORMATION SIGNING SPECIAL PROVISION

GENERAL NOTES:

1. CONES MAY BE SUBSTITUTED FOR DRUMS OR TYPE II BARRICADES DURING DAY OPERATIONS. CONES SHALL BE A MINIMUM OF 28 (700) HIGH.
2. VERTICAL BARRICADES SHALL NOT BE USED FOR RAMP CLOSURES.
3. A FLAGGER SHALL BE POSITIONED AT EACH CLOSED RAMP THAT IS OPEN TO CONSTRUCTION VEHICLES, PRECEEDED BY A W20-7 FLAGGER WARNING SIGN.
4. ALL ROUTE MARKERS AND TRAILBLAZER ASSEMBLIES WHICH DIRECT MOTORISTS TO A CLOSED ENTRANCE RAMP SHALL BE COVERED WHEN THE RAMP IS CLOSED FOR MORE THAN FOUR (4) DAYS.
5. THE SIGNING AND BARRICADING WHICH IS REQUIRED BY THIS DETAIL SHALL BE INCLUDED IN THE COST OF TRAFFIC CONTROL AND PROTECTION (EXPRESSWAYS).
6. AUTHORIZATION FROM THE DISTRICT'S BUREAU OF TRAFFIC IS REQUIRED FOR ALL RAMP CLOSURES.
7. THE RAMP CLOSURE ADVANCE INFORMATION SIGNS SHALL BE ERECTED IF THE CLOSURE TIME EXCEEDS TWENTY-FOUR (24) HOURS. ADDITIONAL ADVANCE WARNING SIGNS ON EXIT GUIDE SIGNING WILL BE REQUIRED FOR EXIT RAMP CLOSURES THAT EXCEED FOUR (4) DAYS IN LENGTH
8. ROAD CONSTRUCTION AHEAD SIGNS MAY BE OMITTED WHEN THIS DETAIL IS USED IN CONJUNCTION WITH OTHER TRAFFIC CONTROL THAT ALREADY INCLUDES A ROAD CONSTRUCTION AHEAD SIGN.
9. ARTERIAL ROAD CONSTRUCTION AHEAD SIGNS SHALL BE INSTALLED ON THE LEFT SIDE OF TRAFFIC IF THE MEDIAN IS MORE THAN 10 FT WIDE.

ALL DIMENSIONS ARE IN INCHES (MILLIMETERS) UNLESS OTHERWISE SHOWN.

MODEL: Default
FILE NAME: G:\LP220720 IDOT D1 PTB 204-001 Michigan City Rd Bridge\03A Design\01 CADD\02 Sheets\Roadway\142-D16RR02-sht-DOT STD 01.dgn

DELTA ENGINEERING GROUP, LLC
CONSULTING ENGINEERS, CONSTRUCTION MANAGERS, SURVEYORS
111 W JACKSON BLVD, SUITE 910
CHICAGO, IL 60604
T 312.377.7700, F 312.427 6145

USER NAME = denisb	DESIGNED - MA/DB	REVISED -	
	DRAWN - DB	REVISED -	
PLOT SCALE = 20.0000 ' / in.	CHECKED - MA	REVISED -	
PLOT DATE = 12/13/2024	DATE - 12/13/2024	REVISED -	

STATE OF ILLINOIS
DEPARTMENT OF TRANSPORTATION

ENTRANCE AND EXIT RAMP CLOSURE DETAILS

SCALE: 1:10 | SHEET 01 OF 13 SHEETS | STA. N/A | TO STA. N/A

F.A.I. RTE.	SECTION	COUNTY	TOTAL SHEETS	SHEET NO.
94	FAI 94 22 STRUCTURE 2	COOK	157	145
	TC-08	CONTRACT NO. 62R62		
	ILLINOIS	FED. AID PROJECT		

SINGLE LANE WEAVE

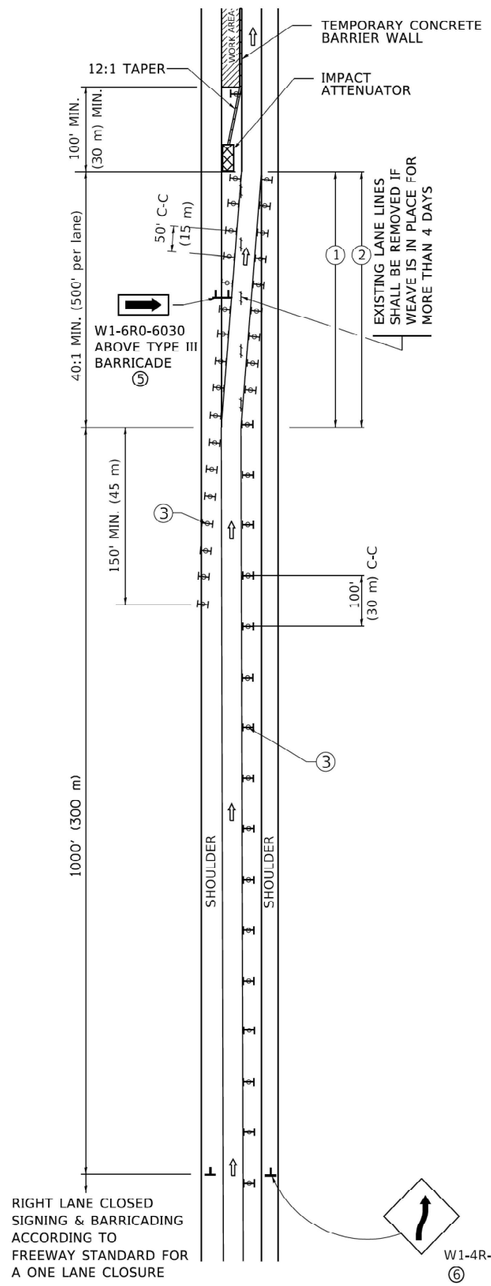

MULTI–LANE WEAVE

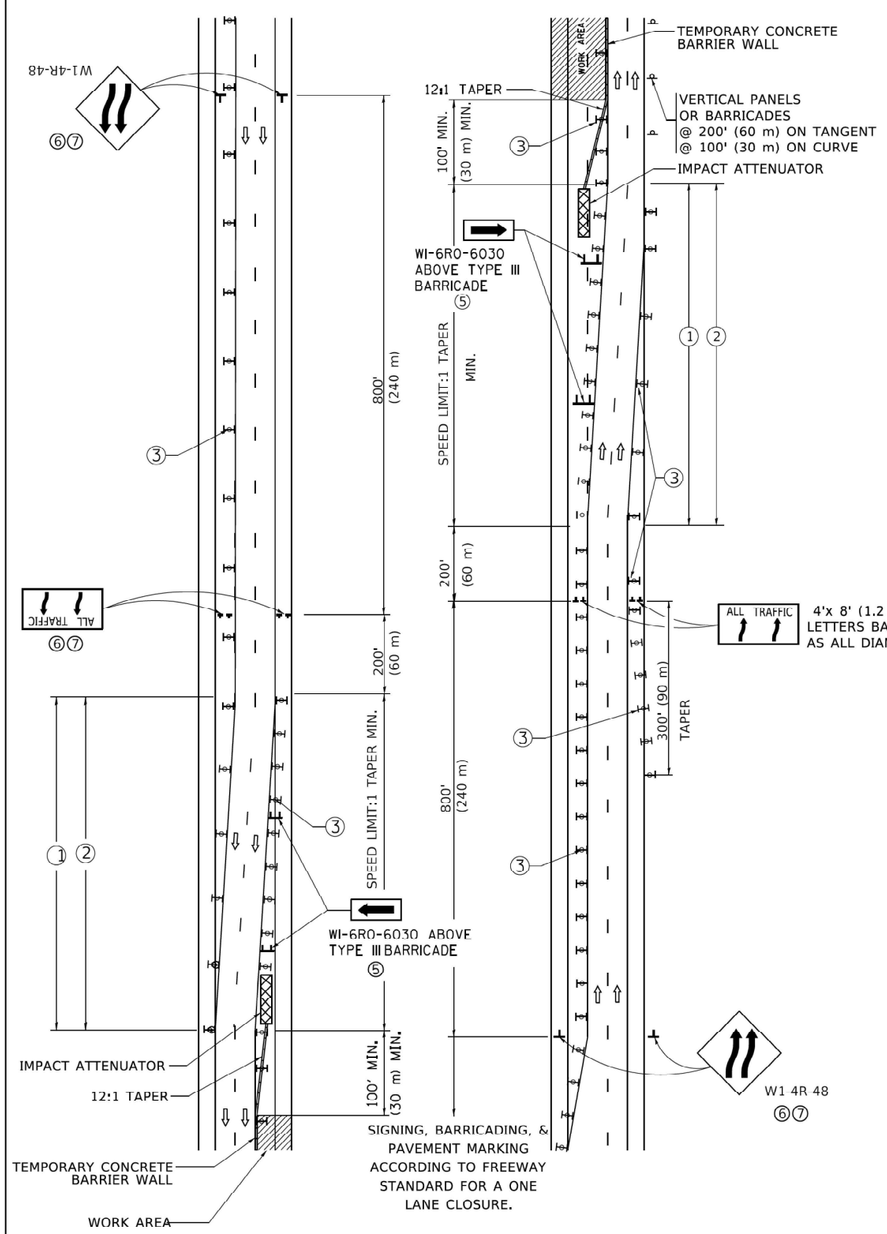

4'x 8' (1.2 m x 2.4 m); 1 (25) BORDER; 10 (250) CAPITAL LETTERS BACKGROUND SHEETING SHALL BE THE SAME AS ALL DIAMOND SHAPED CONSTRUCTION SIGNS.

GENERAL NOTES:

① EXISTING CONFLICTING PAVEMENT MARKING LINES SHALL BE REMOVED. PAVEMENT MARKING REMOVAL SHALL NOT BE REQUIRED FOR SINGLE LANE WEAVES UNDER 4 DAYS IN DURATION.

② CONTINOUS REFLECTIVE TEMPORARY PAVEMENT MARKING TAPE SHALL BE PLACED THROUGHOUT THE TAPER AND FOR 300' (90 m) ALONG SIDE THE WORK AREA WHERE THE CLOSURE TIME IS GREATER THAN FOURTEEN DAYS. THE LEFT EDGE LINE SHALL BE YELLOW AND THE RIGHT EDGE LINE SHALL BE WHITE. FOR MULTI-LANE WEAVES LANE LINES SHALL BE 5 INCH, 10'-30' (3 m-9 m) SKIP DASH, WHITE.

③ PLASTIC DRUMS WITH STEADY BURN LIGHTS AT 50' (15 m) C-C SPACING IN TAPERS AND 100' (30 m) C-C SPACING IN TANGENTS.

④ ALL SIGNS SHALL BE POST MOUNTED IF THE CLOSURE TIME EXCEEDS FOUR DAYS.

⑤ TYPE III BARRICADES MAY BE OMMITTED FOR SINGLE-LANE WEAVES UNDER 24-HOURS IN DURATION. W1-6 SIGNS WILL STILL BE REQUIRED. IF THE WIDTH OF OFFSET IS LESS THAN 6' THEN THE TYPE III BARRICADE WITH ATTACHED ARROW SIGN PANEL CAN BE ELIMINATED IN THE TAPER AREAS.

⑥ WHEN THE LENGTH OF THE SHIFTED SEGMENT (DISTANCE BETWEEN WEAVE POINTS) IS LESS THAN 1500', DOUBLE REVERSE CURVE SIGNS (W24-1) SHOULD BE USED INSTEAD OF THE REVERSE CURVE (W1-4) SIGNS. ARROWS ON THE 4'X8' "ALL TRAFFIC" SIGNS SHALL BE THE SAME SHAPE.

⑦ THE NUMBER OF ARROWS ON THESE SIGNS SHALL MATCH THE NUMBER OF LANES OPEN TO TRAFFIC.

SYMBOLS

- DIRECTION OF TRAFFIC
- WORK AREA
- SIGN ON PORTABLE OR PERMANENT SUPPORT
- TYPE II BARRICADE OR DRUM WITH MONO-DIRECTIONAL STEADY BURNING LIGHT
- TEMPORARY CONCRETE BARRIER WALL
- IMPACT ATTENUATOR
- W24-1-48 ⑦

ALL DIMENSIONS ARE IN INCHES (MILLIMETERS) UNLESS OTHERWISE SHOWN

MODE: Default
FILE NAME: G:\LP20220 IDOT D1 PTB 204-001 Michigan City Rd Bridge\03A Design\01 CADD\02 Sheet\Roadway\143-01\62R62-sht-DOT STD 01.dgn

DELTA ENGINEERING GROUP, LLC
CONSULTING ENGINEERS, CONSTRUCTION MANAGERS, SURVEYORS
111 W JACKSON BLVD, SUITE 910
CHICAGO, IL 60604
T 312.377.7700, F 312.427 6145

USER NAME = denisb	DESIGNED - MA/DB	REVISED -
	DRAWN - DB	REVISED -
PLOT SCALE = 20.0000 ' / in.	CHECKED - MA	REVISED -
PLOT DATE = 12/13/2024	DATE - 12/13/2024	REVISED -

STATE OF ILLINOIS
DEPARTMENT OF TRANSPORTATION

TRAFFIC CONTROL DETAILS FOR FREEWAY SINGLE & MULTI-LANE WEAVE

SCALE: 1:10 | SHEET 02 OF 13 SHEETS | STA. N/A TO STA. N/A

F.A.I. RTE.	SECTION	COUNTY	TOTAL SHEETS	SHEET NO.
94	FAI 94 22 STRUCTURE 2	COOK	157	146
	TC-25	CONTRACT NO. 62R62		
		ILLINOIS FED. AID PROJECT		

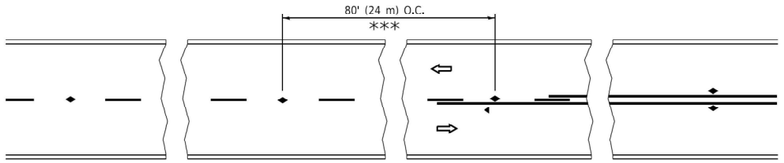

*** REDUCE TO 40' (12 m) O.C. ON CURVES WITH POSTED OR ADVISORY SPEED 45 M.P.H. (70 km/h) OR LESS.

TWO–LANE/TWO–WAY

SEE FIGURE 3B-14 MUTCD

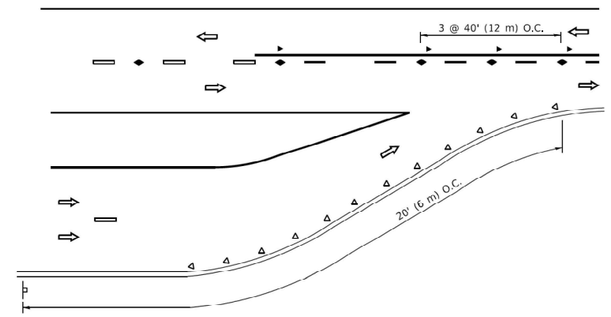

LANE REDUCTION TRANSITION

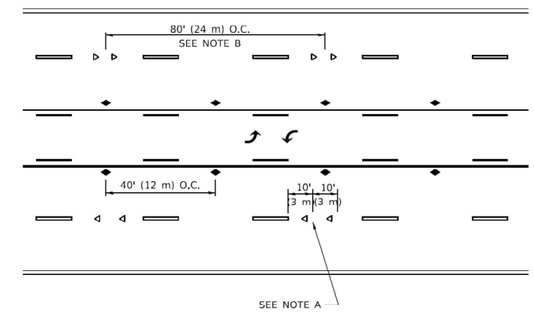

TWO–WAY LEFT TURN

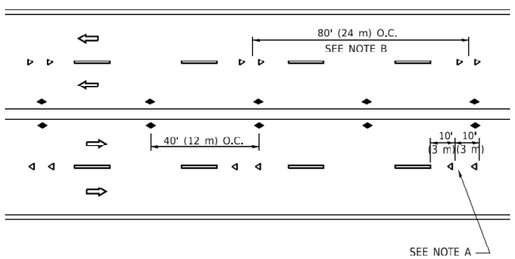

MULTI–LANE/UNDIVIDED

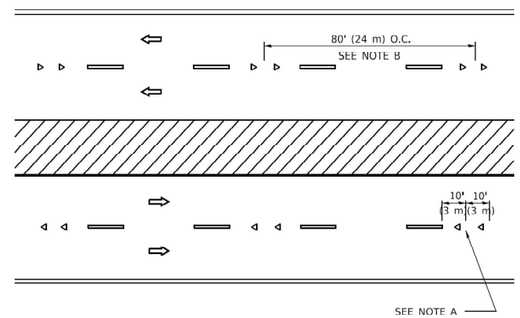

MULTI–LANE/DIVIDED

GENERAL NOTES

1. MARKERS USED WITH DASHED LINES SHALL BE CENTERED IN THE GAP BETWEEN SEGMENTS.
2. MARKERS USED ADJACENT TO SOLID LINES SHALL BE OFFSET 2 TO 3 (50 TO 75) TOWARD TRAFFIC AS SHOWN.
3. MARKERS THROUGH TANGENTS LESS THAN 500' (150 m) IN LENGTH BETWEEN CURVES SHALL BE INSTALLED AT THE LESSER OF THE TWO CURVE SPACINGS.
4. MARKERS ARE TO BE USED ADJACENT TO BOTH SOLID WHITE LINES IN DUAL LEFT TURN LANES

SYMBOLS

- YELLOW STRIPE
- WHITE STRIPE
- ONE-WAY AMBER MARKER
- ONE-WAY CRYSTAL MARKER (W/O)
- TWO-WAY AMBER MARKER

LANE MARKER NOTES

A. USE DOUBLE LANE LINE MARKERS SPACED AS SHOWN.

B. REDUCE TO 40' (12 m) O.C. ON CURVES WHERE ADVISORY SPEEDS ARE 10 M.P.H (20 km/h) LOWER THAN POSTED SPEEDS.

DESIGN NOTES

1. DOUBLE LANE LINE MARKERS SHALL BE USED UNLESS SPECIFIED OTHERWISE.
2. EXCEPT AS SHOWN ON THE LANE REDUCTION TRANSITION AND FREEWAY EXIT RAMP DETAIL, MARKERS ARE NOT TO BE SPECIFIED ON RIGHT EDGE LINES.
3. THE EXACT MARKER LIMITS, SPACING, AND COLOR SHALL BE INCLUDED IN THE PLANS WHEN STANDARD SPECIFICATIONS ARE NOT BEING USED.
4. MARKERS SHOULD NOT BE USED ALONGSIDE CURBS EXCEPT FOR EXTREMELY SHORT SECTIONS OF CURBS WHERE NOT MORE THAN TWO MARKERS WOULD BE INVOLVED.

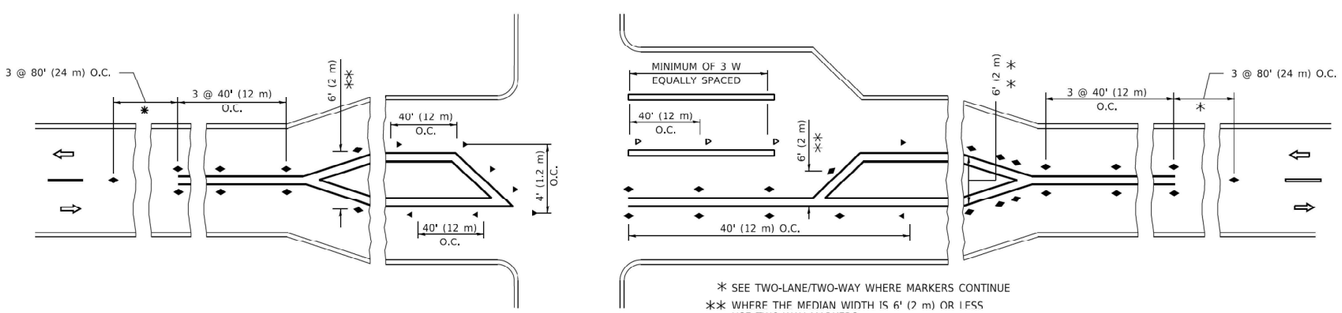

* SEE TWO-LANE/TWO-WAY WHERE MARKERS CONTINUE

** WHERE THE MEDIAN WIDTH IS 6' (2 m) OR LESS USE TWO-WAY MARKERS.

TURN LANES

All dimensions are in inches (millimeters) unless otherwise shown.

MODEL: Default
FILE NAME: G:\LP220720 IDOT D1 PTB 204-001 Michigan City Rd Bridge\03A Design\31 CADD\02 Sheet\Roadway\144-D1-62R62-sht-DOT STD 01.dgn

DELTA ENGINEERING GROUP, LLC
CONSULTING ENGINEERS, CONSTRUCTION MANAGERS, SURVEYORS
111 W JACKSON BLVD, SUITE 910
CHICAGO, IL 60604
T 312.377.7700, F 312.427 6145

USER NAME = denisb	DESIGNED - MA/DB	REVISED -	
	DRAWN - DB	REVISED -	
PLOT SCALE = 20.0000 ' / in.	CHECKED - MA	REVISED -	
PLOT DATE = 12/13/2024	DATE - 12/13/2024	REVISED -	

STATE OF ILLINOIS
DEPARTMENT OF TRANSPORTATION

TYPICAL APPLICATIONS
RAISED REFLECTIVE PAVEMENT MARKERS (SNOW-PLOW RESISTANT)

SCALE: 1:10 | SHEET 03 OF 13 SHEETS | STA. N/A TO STA. N/A

F.A.I. RTE.	SECTION	COUNTY	TOTAL SHEETS	SHEET NO.
94	FAI 94 22 STRUCTURE 2	COOK	157	147
	TC-11	CONTRACT NO. 62R62		
		ILLINOIS	FED. AID PROJECT	

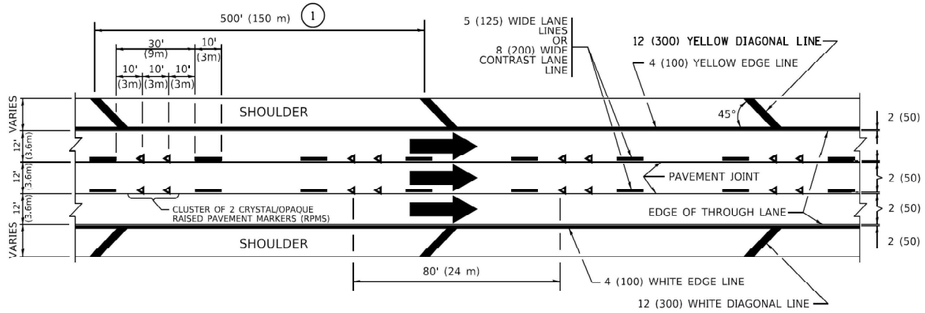

TYPICAL EDGE LINES & LANE LINES

PAVEMENT MARKING MATERIALS

1. THERMOPLASTIC PAVEMENT MARKING LINE SHALL BE USED FOR ALL EDGE LINES, GORE LINES, AND DIAGONAL LINES ON HMA PAVEMENTS.
2. POLYUREA OR MODIFIED URETHANE PAVEMENT MARKING LINE SHALL BE USED FOR ALL EDGE LINES, GORE LINES, AND DIAGONAL LINES ON PCC PAVEMENTS.
3. PREFORMED PLASTIC PAVEMENT MARKING LINE TYPE D, INLAID OR GROOVE IN, SHALL BE USED FOR ALL LANE LINES ON HMA PAVEMENTS.
4. CONTRAST PREFORMED PLASTIC PAVEMENT MARKING LINE TYPE B, GROOVE IN, SHALL BE USED FOR ALL LANE LINES ON PCC PAVEMENT.

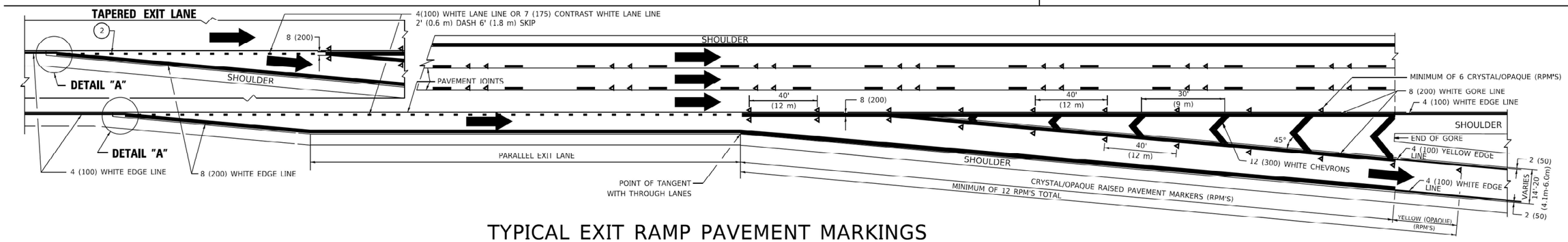

TYPICAL EXIT RAMP PAVEMENT MARKINGS

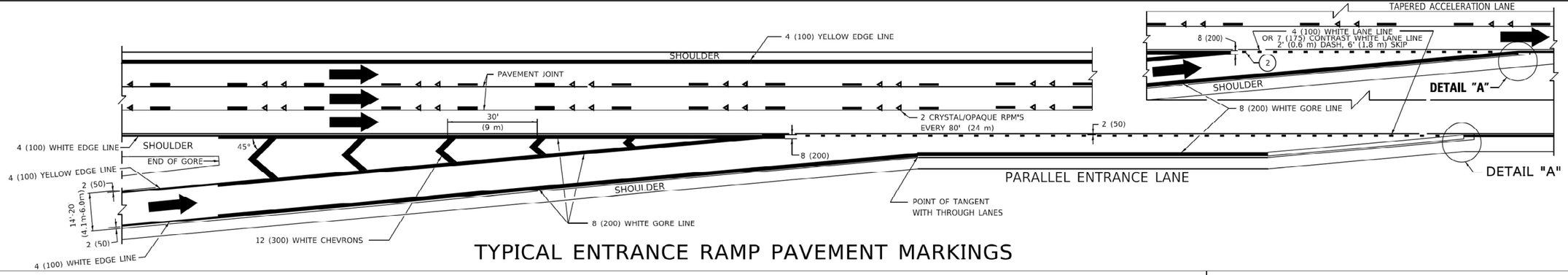

TYPICAL ENTRANCE RAMP PAVEMENT MARKINGS

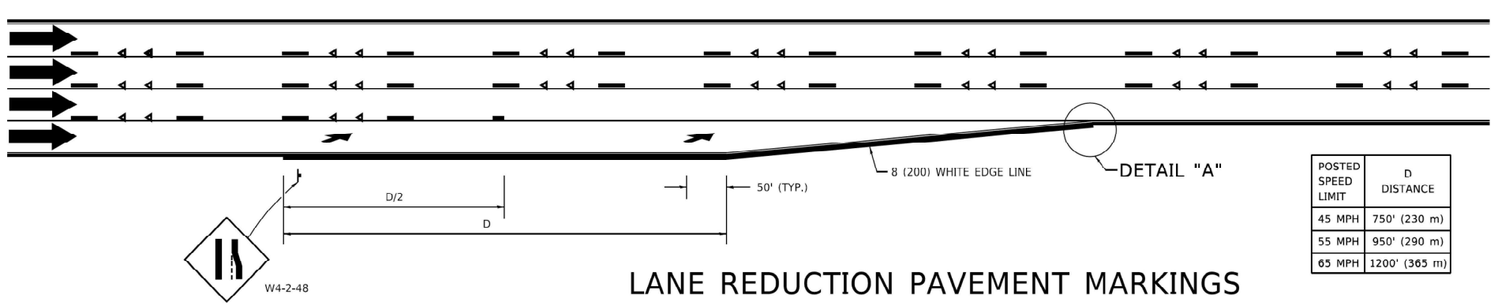

LANE REDUCTION PAVEMENT MARKINGS

POSTED SPEED LIMIT	D DISTANCE
45 MPH	750' (230 m)
55 MPH	950' (290 m)
65 MPH	1200' (365 m)

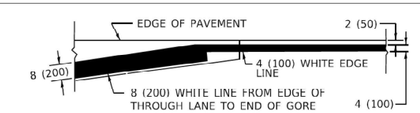

DETAIL "A"

NOTES:

1. THE DIAGONAL LINES SHALL BE SPACED AT 40' (12 m) C-C ACROSS ALL STRUCTURES WHICH ARE 500' (150 m) OR LESS IN LENGTH. THE DIAGONAL LINES ARE NOT REQUIRED ON SHOULDERS WHICH ARE 6' (1.8 m) OR LESS IN WIDTH.
2. 4" (2' DASH, 6' SKIP) MARKING ON TAPERED ENTRANCE AND EXIT RAMP SHALL BE OMITTED ON TANGENT SECTIONS.

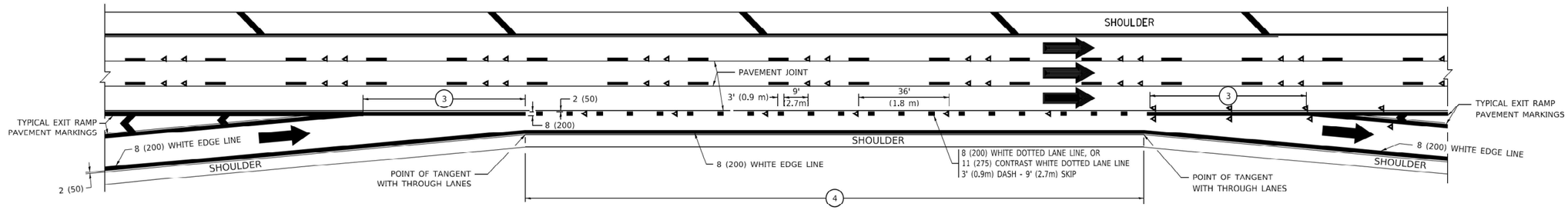

AUXILIARY LANE MARKINGS

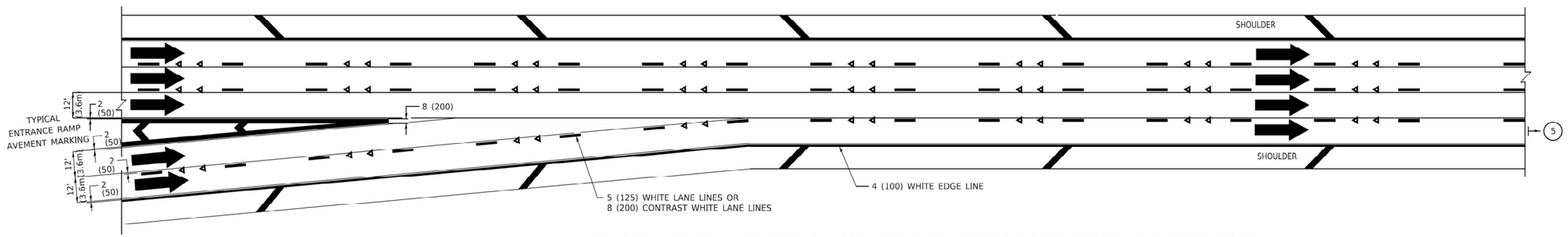

TWO LANE ENTRANCE RAMP WITH MERGE MARKINGS

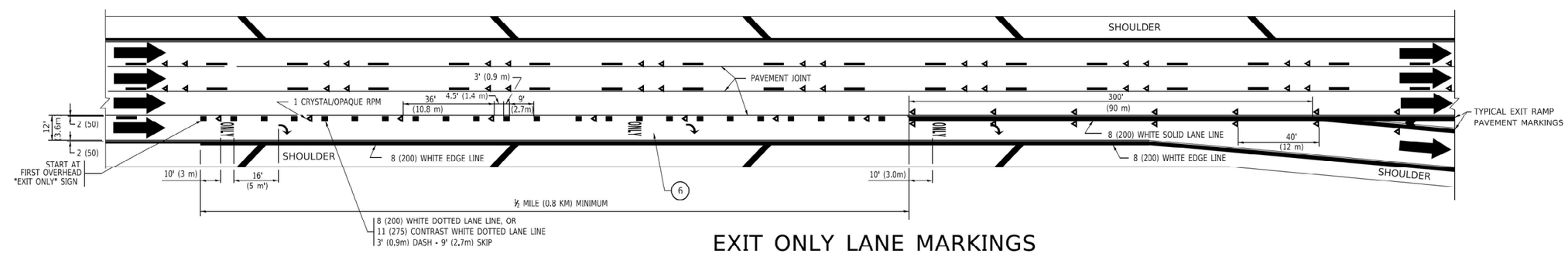

EXIT ONLY LANE MARKINGS

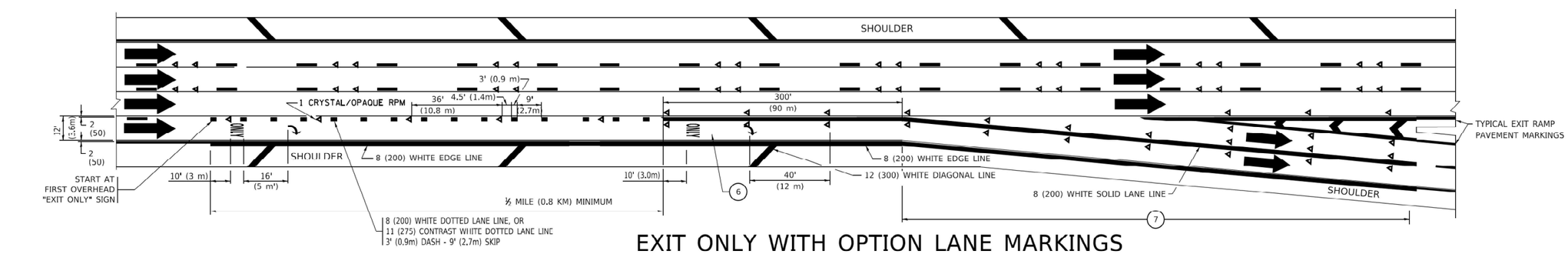

EXIT ONLY WITH OPTION LANE MARKINGS

NOTES:

3. OMIT WHEN LENGTH OF AUXILIARY LANE IS LESS THAN 500' (150 m).
4. 8-INCH WIDE DOTTED LANE LINE MARKINGS SHALL BE USED WHEN THE LENGTH OF THE AUXILIARY LANE IS 2 MILES OR LESS.
5. FOR TWO-LANE ENTRANCE RAMP, IF RIGHT LANE ENDS, USE TYPICAL ENTRANCE RAMP PAVEMENT MARKINGS.
6. ONLY AND ARROWS EQUALLY SPACED, 500' (150 m) MAXIMUM SPACING. FULL SIZE LETTERS AND ARROW SHALL BE USED..
7. CONTINUE 8" SOLID LANE LINE THROUGH EXIT TO END OF PAVED GORE.

MODEL: Default
FILE NAME: G:\LIP20720 IDOT D1 PTB 204-001 Michigan City Rd Bridge\03A Design\01 CADD\02 Sheet\Roadway\146-D16R62-sht-DOT STD 01.dgn

DELTA ENGINEERING GROUP, LLC
CONSULTING ENGINEERS, CONSTRUCTION MANAGERS, SURVEYORS
111 W JACKSON BLVD, SUITE 910
CHICAGO, IL 60604
T 312.377.7700, F 312.427 6145

USER NAME = denisb	DESIGNED - MA/DB	REVISED -	
	DRAWN - DB	REVISED -	
PLOT SCALE = 20.0000 ' / in.	CHECKED - MA	REVISED -	
PLOT DATE = 12/13/2024	DATE - 12/13/2024	REVISED -	

STATE OF ILLINOIS
DEPARTMENT OF TRANSPORTATION

MULTI-LANE FREEWAY
PAVEMENT MARKING DETAILS

SCALE: 1:10 | SHEET 05 OF 13 SHEETS | STA. N/A | TO STA. N/A

F.A.I. RTE.	SECTION	COUNTY	TOTAL SHEETS	SHEET NO.
94	FAI 94 22 STRUCTURE 2	COOK	157	149
	TC-12	CONTRACT NO. 62R62		
		ILLINOIS	FED. AID PROJECT	

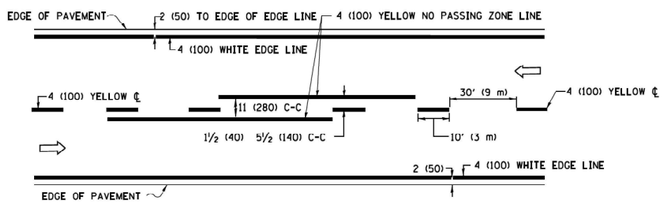

2–LANE ROADWAY

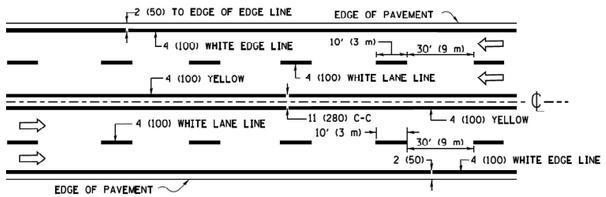

MULTI–LANE UNDIVIDED

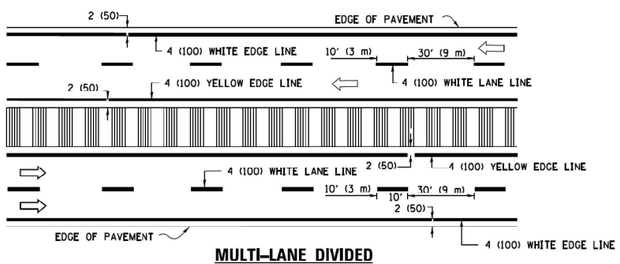

MULTI–LANE DIVIDED
WITH MEDIAN

TYPICAL LANE AND EDGE LINE MARKING

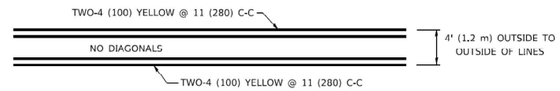

4' (1.2 m) WIDE MEDIANS ONLY

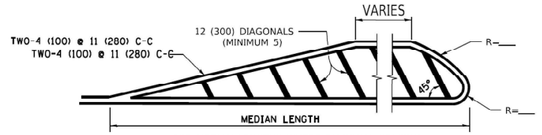

FOR MEDIAN LENGTHS WHERE DIAGONAL SPACING CANNOT BE ATTAINED, USE 5 (FIVE) EQUALLY SPACED DIAGONAL LINES.

DIAGONAL LINE SPACING: 50' (15 m) C-C (LESS THAN 30MPH (50 km/h))
75' (25 m) C-C 30MPH (50 km/h) TO 45MPH (70 km/h))
150' (45 m) C-C (MORE THAN 45MPH (70 km/h))

MEDIANS OVER 4' (1.2 m) WIDE

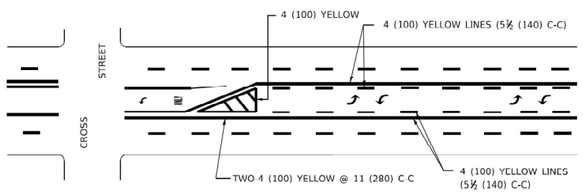

A MINIMUM OF TWO PAIRS OF TURN ARROWS SHALL BE USED. WHITE IN COLOR. ADDITIONAL PAIRS SHALL BE PLACED AT 200' (60 m) TO 300' (90 m) INTERVALS.

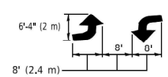

MEDIAN WITH TWO–WAY LEFT TURN LANE

TYPICAL PAINTED MEDIAN MARKING

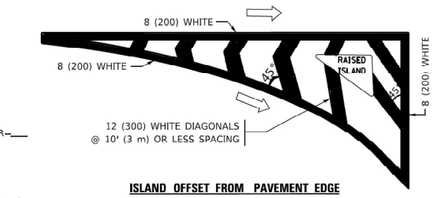

ISLAND OFFSET FROM PAVEMENT EDGE

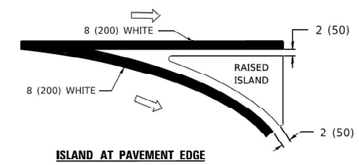

ISLAND AT PAVEMENT EDGE

TYPICAL ISLAND MARKING

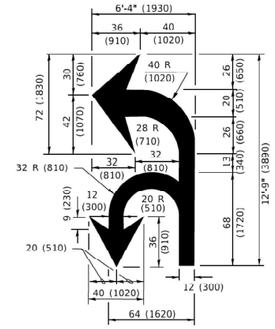

COMBINATION LEFT AND U–TURN

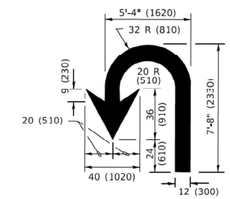

U–TURN

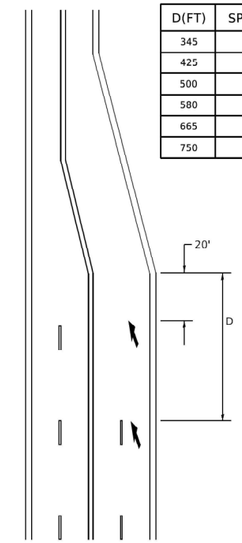

D(FT)	SPEED LIMIT
345	30
425	35
500	40
580	45
665	50
750	55

LANE REDUCTION TRANSITION

* LANE REDUCTION ARROWS REQUIRED AT SPEEDS OF 45 MPH OR GREATER OR WHEN SPECIFIED IN PLANS.

TYPE OF MARKING	WIDTH OF LINE	PATTERN	COLOR	SPACING / REMARKS
CENTERLINE ON 2 LANE PAVEMENT	4 (100)	SKIP-DASH	YELLOW	10' (3 m) LINE WITH 30' (9 m) SPACE
CENTERLINE ON MULTI-LANE UNDIVIDED PAVEMENT	2 @ 4 (100)	SOLID	YELLOW	11 (280) C-C
NO PASSING ZONE LINES: FOR ONE DIRECTION FOR BOTH DIRECTIONS	4 (100) 2 @ 4 (100)	SOLID SOLID	YELLOW YELLOW	5½ (140) C-C FROM SKIP-DASH CENTERLINE 11 (280) C-C OMIT SKIP-DASH CENTERLINE BETWEEN
LANE LINES	4 (100) 5 (125) ON FREEWAYS	SKIP-DASH SKIP-DASH	WHITE WHITE	10' (3 m) LINE WITH 30' (9 m) SPACE
DOTTED LINES (EXTENSIONS OF CENTER, LANE OR TURN LANE MARKINGS)	SAME AS LINE BEING EXTENDED	SKIP-DASH	SAME AS LINE BEING EXTENDED	2' (600) LINE WITH 6' (1.8 m) SPACE
EDGE LINES	4 (100)	SOLID	YELLOW-LEFT WHITE-RIGHT	OUTLINE MEDIANS IN YELLOW
TURN LANE MARKINGS	6 (150) LINE: FULL SIZE LETTERS & SYMBOLS (8' (2.4m))	SOLID	WHITE	SEE TYPICAL TURN LANE MARKING DETAIL
TWO WAY LEFT TURN MARKING	2 @ 4 (100) EACH DIRECTION 8' (2.4m) LEFT ARROW	SKIP-DASH AND SOLID IN PAIRS	YELLOW WHITE	10' (3 m) LINE WITH 30' (9 m) SPACE FOR SKIP-DASH; 5½ (140) C-C BETWEEN SOLID LINE AND SKIP-DASH LINE SEE TYPICAL TWO-WAY LEFT TURN MARKING DETAIL
CROSSWALK LINES (PEDESTRIAN) A. DIAGONALS (BIKE & EQUESTRIAN) B. LONGITUDINAL BARS (SCHOOL)	2 @ 6 (150) 12 (300) @ 45° 12 (300) @ 90°	SOLID SOLID SOLID	WHITE WHITE WHITE	NOT LESS THAN 6' (1.8 m) APART 2' (600) APART 2' (600) APART SEE TYPICAL CROSSWALK MARKING DETAILS.
STOP LINES	24 (600)	SOLID	WHITE	PLACE 4' (1.2 m) IN ADVANCE OF AND PARALLEL TO CROSSWALK, IF PRESENT. OTHERWISE, PLACE AT DESIRED STOPPING POINT. PARALLEL TO CROSSROAD CENTERLINE. WHERE POSSIBLE
PAINTED MEDIANS	2 @ 4 (100) WITH 12 (300) DIAGONALS @ 45° NO DIAGONALS USED FOR 4' (1.2 m) WIDE MEDIANS	SOLID	YELLOW: TWO WAY TRAFFIC WHITE: ONE WAY TRAFFIC	11 (280) C-C FOR THE DOUBLE LINE SEE TYPICAL PAINTED MEDIAN MARKING.
GORE MARKING AND CHANNELIZING LINES	8 (200) WITH 12 (300) DIAGONALS @ 45°	SOLID	WHITE	DIAGONALS: 15' (4.5 m) C-C (LESS THAN 30MPH (50 km/h)) 20' (6 m) C-C 30MPH (50 km/h) TO 45MPH (70 km/h)) 30' (9 m) C-C (OVER 45MPH (70 km/h))
RAILROAD CROSSING	24 (600) TRANSVERSE LINES; "RR" IS 6' (1.8 m) LETTERS; 16 (400) LINE FOR "X"	SOLID	WHITE	SEE STATE STANDARD 780001 AREA OF: "R"=3.6 SQ. FT. (0.33 m²) EACH "X"=54.0 SQ. FT. (5.0 m²)
SHOULDER DIAGONALS (REQUIRED FOR SHOULDERS ≥ 8')	12 (300) @ 45°	SOLID	WHITE - RIGHT YELLOW - LEFT	50' (15 m) C-C (LESS THAN 30MPH (50 km/h)) 75' (25 m) C-C (30 MPH (50 km/h) TO 45MPH (70 km/h)) 150' (45 m) C-C (OVER 45MPH (70 km/h))
U TURN ARROW	SEE DETAIL	SOLID	WHITE	16.3 SF
2 ARROW COMBINATION LEFT AND U TURN	SEE DETAIL	SOLID	WHITE	30.4 SF

FOR FURTHER DETAILS ON PAVEMENT MARKING REFER TO STANDARD SPECIFICATIONS FOR ROAD AND BRIDGE CONSTRUCTION AND STATE STANDARD 780001.

All dimensions are in inches (millimeters) unless otherwise shown.

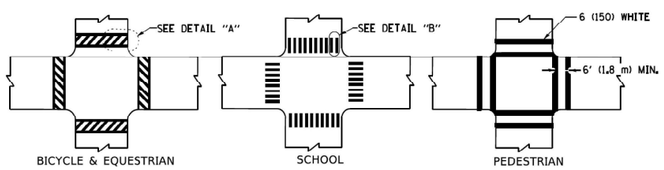

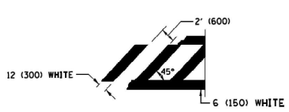

DETAIL "A"

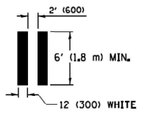

DETAIL "B"

TYPICAL CROSSWALK MARKING

* MARKINGS SHALL BE INSTALLED PARALLEL TO THE CENTERLINE OF THE ROAD WHICH IT CROSSES

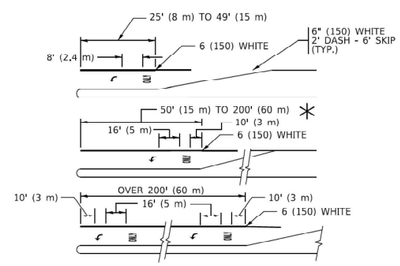

FULL SIZE LETTERS 8' (2.4 m) AND ARROWS SHALL BE USED.
AREA = 15.6 SQ. FT. (1.5 m²) ONLY AREA = 20.8 SQ. FT. (1.9 m²)

* TURN LANES IN EXCESS OF 400' (120 m) IN LENGTH MAY HAVE AN ADDITIONAL SET OF ARROW - "ONLY" INSTALLED MIDWAY BETWEEN THE OTHER TWO SETS OF ARROW - "ONLY".

TYPICAL LEFT (OR RIGHT) TURN LANE

TYPICAL TURN LANE MARKING

MODEL: Default
FILE NAME: G:\P220720 IDOT D1 PTB 204-001 Michigan City Rd Bridge\03A Design\31 CADD\32 Sheet\Roadway\147-D1G62R62-sht-DOT STD .dgn

DELTA ENGINEERING GROUP, LLC
CONSULTING ENGINEERS, CONSTRUCTION MANAGERS, SURVEYORS
111 W JACKSON BLVD, SUITE 910
CHICAGO, IL 60604
T 312.377.7700, F 312.427 6145

USER NAME = denisb	DESIGNED - MA/DB	REVISED -	
	DRAWN - DB	REVISED -	
PLOT SCALE = 40.0000 ' / in.	CHECKED - MA	REVISED -	
PLOT DATE = 12/13/2024	DATE - 12/13/2024	REVISED -	

STATE OF ILLINOIS
DEPARTMENT OF TRANSPORTATION

DISTICT ONE
TYPICAL PAVEMENT MARKINGS

SCALE: N/A | SHEET 06 OF 13 SHEETS | STA. N/A | TO STA. N/A

F.A.I. RTE.	SECTION	COUNTY	TOTAL SHEETS	SHEET NO.
94	FAI 94 22 STRUCTURE 2	COOK	157	150
	TC-13	CONTRACT NO. 62R62		
		ILLINOIS	FED. AID PROJECT	

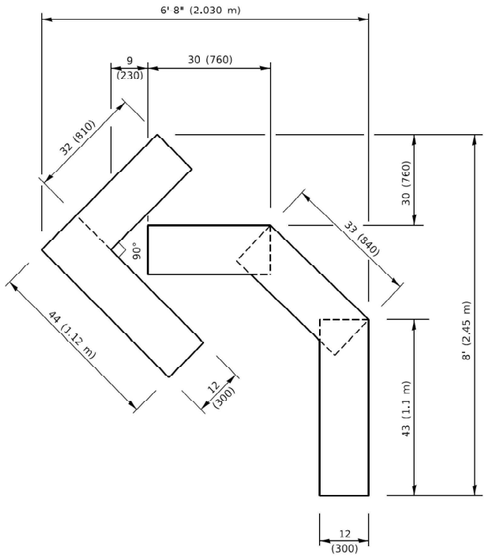

QUANTITY

4 (100) LINE = 45.5 ft. (13.9 m)
15.2 sq. ft. (1.41 sq. m)

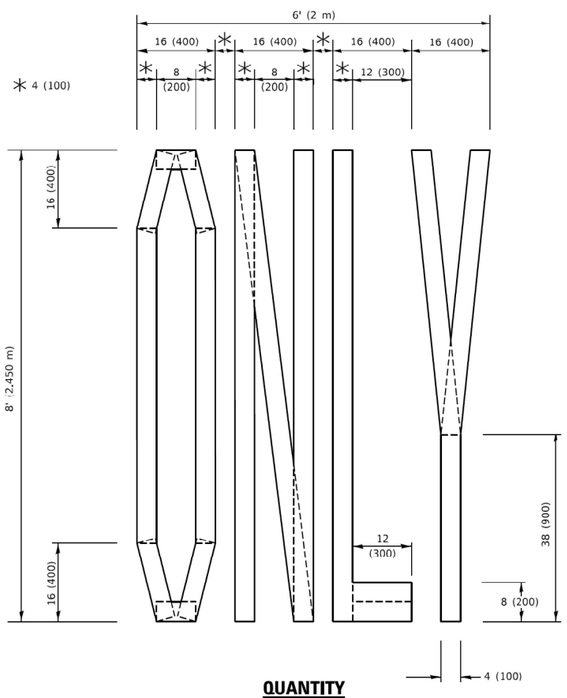

QUANTITY

4 (100) LINE = 64.1 ft. (19.5 m)
21.4 sq. ft. (1.99 sq. m)

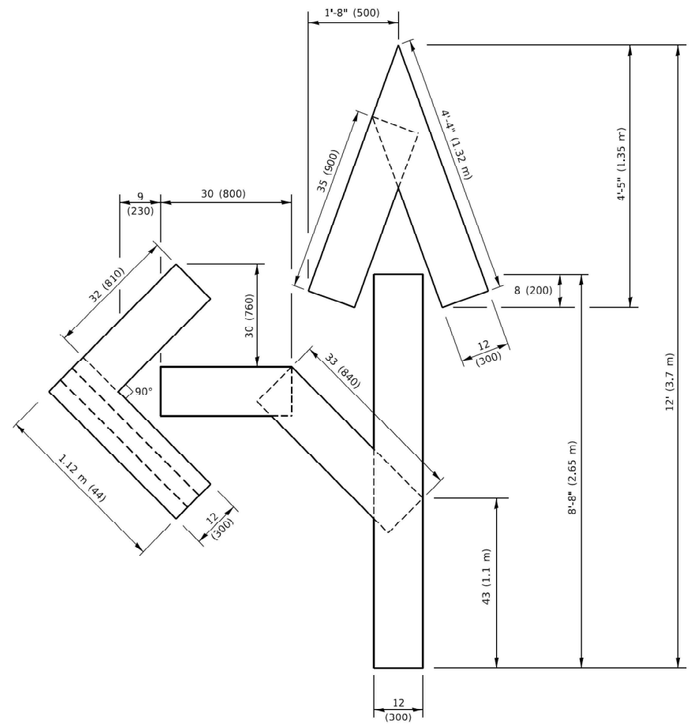

QUANTITY

4 (100) LINE = 82.5 ft. (25.1 m)
27.5 sq. ft. (2.53 sq. m)

NOTE:

ALL QUANTITIES OF PLACEMENT ARE REPRESENTED IN LINEAR FEET OF 4" LINES TO MATCH THE 4" TEMPORARY TAPE PAY ITEM AND REPRESENTS THE TOTAL QUANTITY OF 4" TAPE REQUIRED.

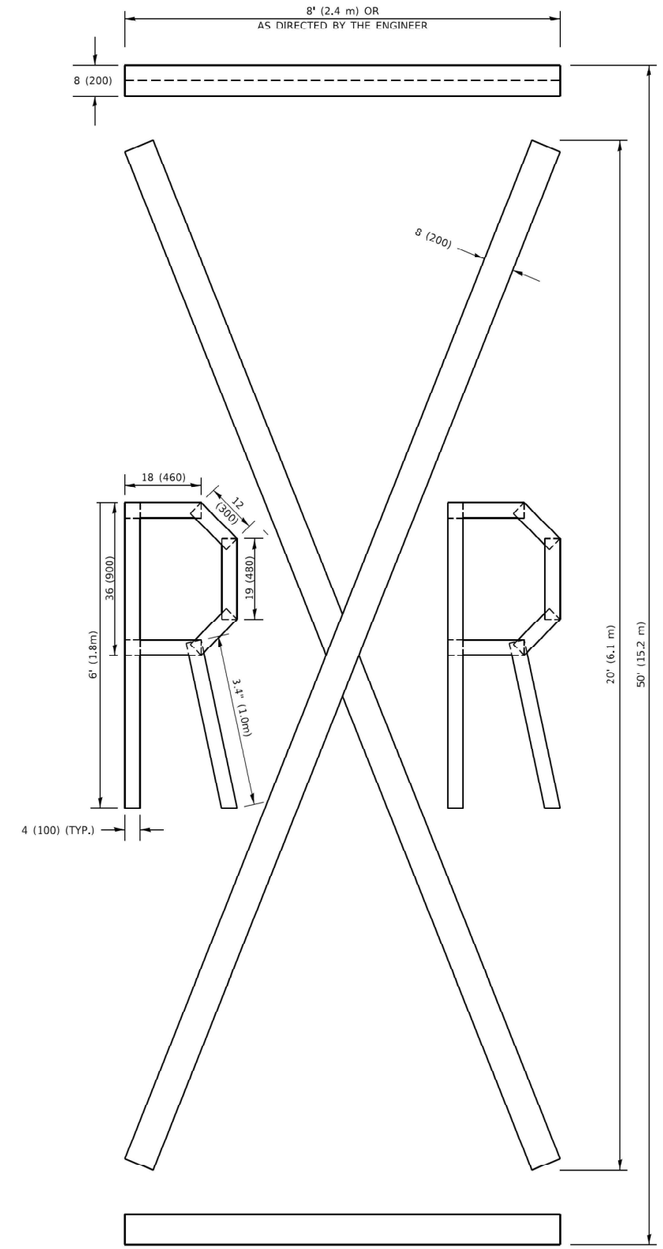

QUANTITY

4 (100) LINE = 225.9 ft. (68.9 m)
75.3 sq. ft. (6.99 sq. m)

All dimensions are in inches (millimeters) unless otherwise shown.

MODEL: Default
FILE NAME: G:\LP20720 IDOT D1 PTB 204-001 Michigan City Rd Bridge\03A Design\01 CADD\02 Sheet\Roadway\148-D16RR2-sht-DOT STD .dgn

DELTA ENGINEERING GROUP, LLC
CONSULTING ENGINEERS, CONSTRUCTION MANAGERS, SURVEYORS
111 W JACKSON BLVD, SUITE 910
CHICAGO, IL 60604
T 312.377.7700, F 312.427 6145

USER NAME = denisb	DESIGNED - MA/DB	REVISED -
	DRAWN - DB	REVISED -
PLOT SCALE = 40.0000 ' / in.	CHECKED - MA	REVISED -
PLOT DATE = 12/13/2024	DATE - 12/13/2024	REVISED -

STATE OF ILLINOIS
DEPARTMENT OF TRANSPORTATION

SHORT TERM PAVEMENT MARKING LETTERS AND SYMBOLS

SCALE: N/A | SHEET 07 OF 13 SHEETS | STA. N/A | TO STA. N/A

F.A.I. RTE.	SECTION	COUNTY	TOTAL SHEETS	SHEET NO.
94	FAI 94 22 STRUCTURE 2	COOK	157	151
	TC-16	CONTRACT NO. 62R62		
	ILLINOIS	FED. AID PROJECT		

PARTIAL RAMP CLOSURE DETAILS

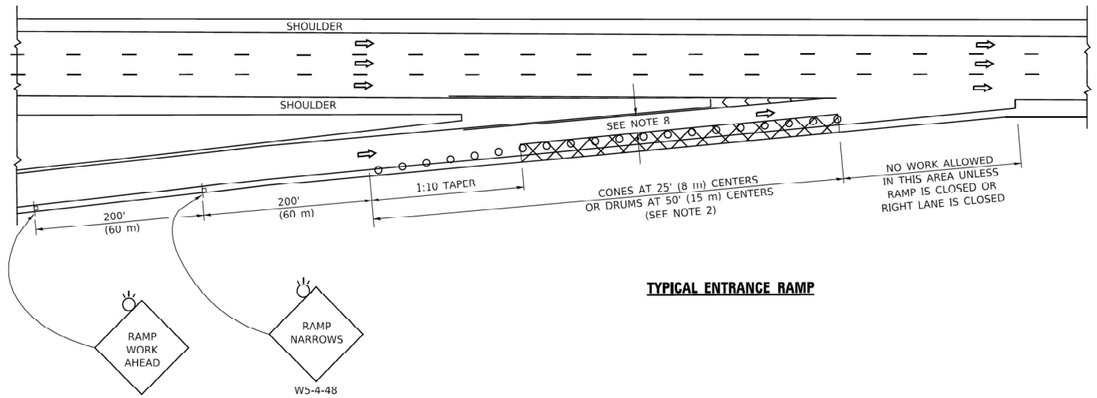

TYPICAL ENTRANCE RAMP

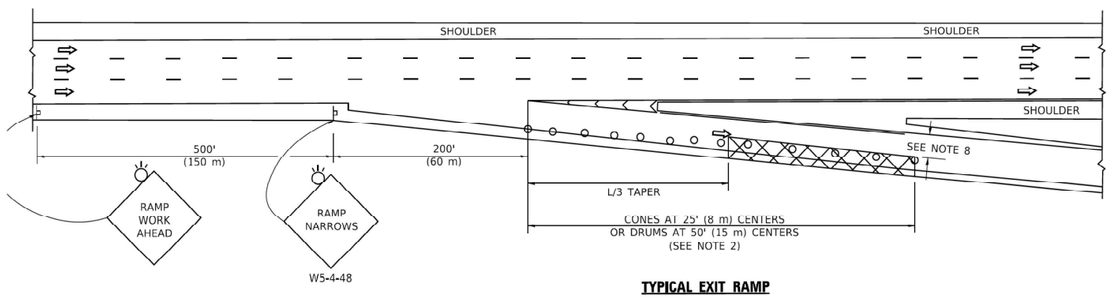

TYPICAL EXIT RAMP

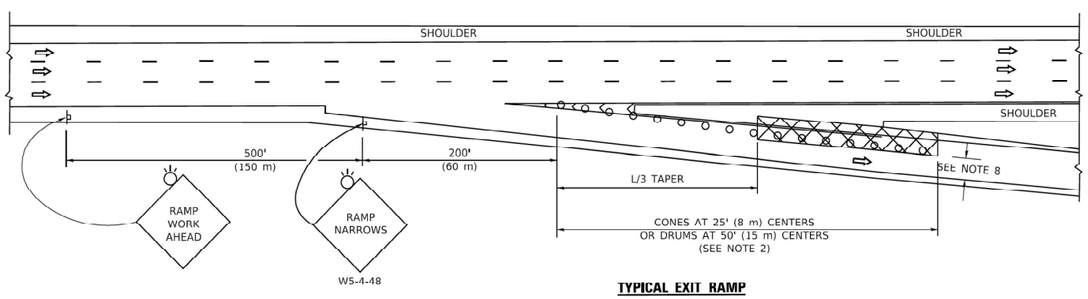

TYPICAL EXIT RAMP

SHOULDER CLOSURE DETAILS

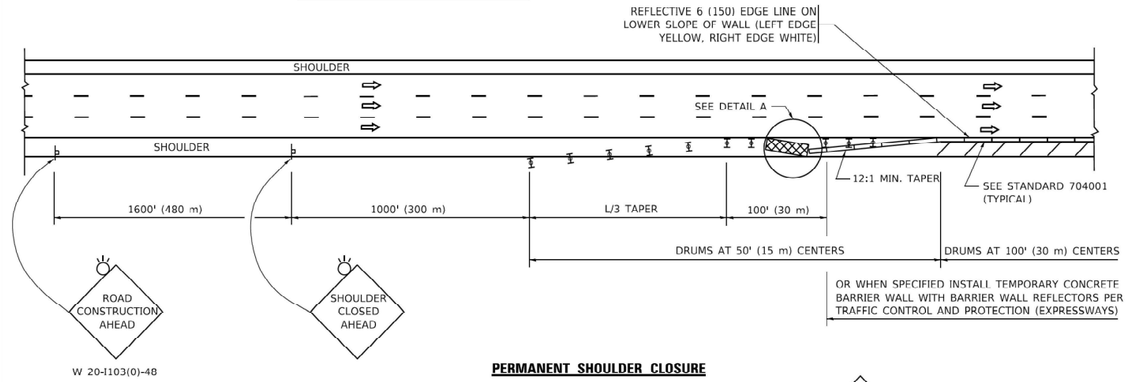

PERMANENT SHOULDER CLOSURE

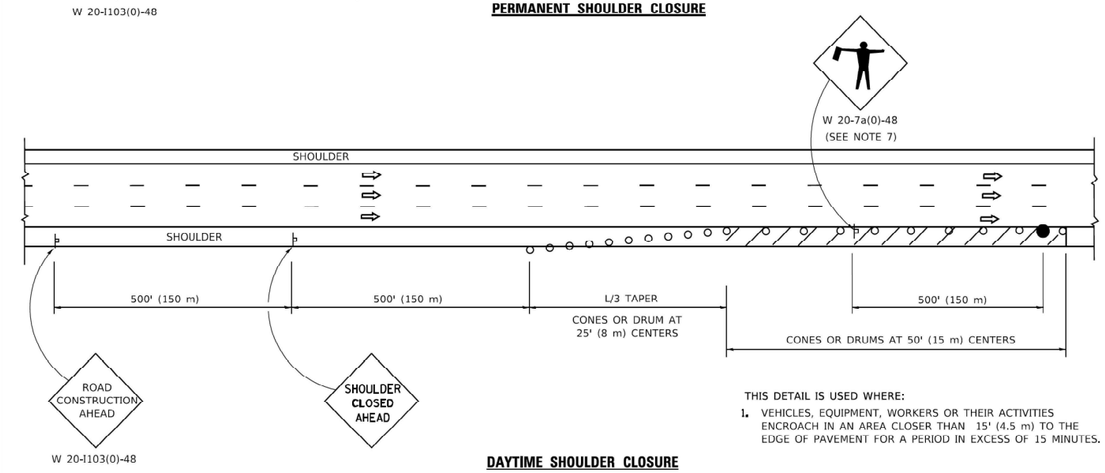

THIS DETAIL IS USED WHERE:

1. VEHICLES, EQUIPMENT, WORKERS OR THEIR ACTIVITIES ENCROACH IN AN AREA CLOSER THAN 15' (4.5 m) TO THE EDGE OF PAVEMENT FOR A PERIOD IN EXCESS OF 15 MINUTES.

DAYTIME SHOULDER CLOSURE

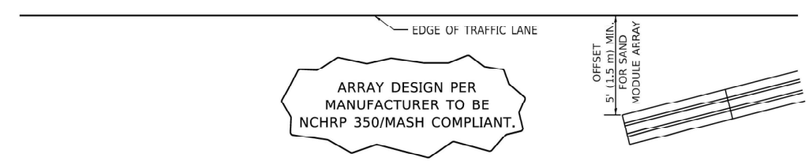

DETAIL "A"
IMPACT ATTENUATOR, TEMPORARY
(SEE NOTE 5)

SYMBOLS

- ACTIVE WORK AREA
- SIGN ON PORTABLE OR PERMANENT SUPPORT
- FLAGGER WITH CONTROL SIGN
- TYPE II BARRICADE OR DRUM
- CONE, DRUM OR BARRICADE
- IMPACT ATTENUATOR OF TYPE AND TEST LEVEL SPECIFIED

GENERAL NOTES:

1. THE "L" DISTANCE EQUALS:

SPEED LIMIT	FORMULAS	
45 mph (80 km/h) OR GREATER:	METRIC	ENGLISH
	L=0.65(W)(S)	L=(W)(S)

W = WIDTH OF OFFSET IN FEET (METERS)
S = NORMAL POSTED SPEED MPH (KM/H)

2. TYPE II BARRICADES OR DRUMS ARE REQUIRED FOR ALL NIGHTTIME CLOSURES. TYPE II BARRICADES OR DRUMS WITH MONODIRECTIONAL STEADY BURN LIGHTS ARE REQUIRED FOR DELINEATING OBSTICLES, EXCAVATIONS, OR HAZARDS EXCEEDING 100 FT (30m) IN LENGTH AT NIGHT.
3. ALL SIGNS SHALL BE POST MOUNTED IF THE CLOSURE TIME EXCEEDS FOUR DAYS.
4. FLASHING LIGHTS SHALL BE USED DURING THE HOURS OF DARKNESS AND SHALL BE INSTALLED ABOVE THE FIRST TWO SETS OF SIGNS.
5. THE IMPACT ATTENTUATOR, TEMPORARY IS NOT REQUIRED WHEN THE TEMPORARY CONCRETE BARRIER WALL IS PROTECTED BY OR IS TIED INTO THE EXISTING GUARDRAIL. IF OFFSET IS LESS THAN 5 FEET USE NARROW USE TYPE DEVICE TO MEET NCHRP350/MASH.
6. AUTHORIZATION FROM THE DISTRICT'S BUREAU OF TRAFFIC IS REQUIRED FOR ALL FREEWAY CLOSURES.
7. THE FLAGGER AND FLAGGER SIGN ARE REQUIRED AT THE ABOVE WORK SITES WHEN:
   a. FOUR OR MORE WORK VEHICLES ENTER THE TRAFFIC LANES IN A ONE HOUR PERIOD.
   b. THE WORK AVTIVITY REQUIRES FREQUENT ENCROACHMENT INTO THE LANE OPEN TO TRAFFIC.

   THE FLAGGER SHALL BE STATIONED APPROXIMATELY 100' (30 m) TO 200' (60 m) IN ADVANCE OF THE WORKERS.
8. 12' MIN. WIDTH TANGENT SECTION
   16' MIN. WIDTH CURVE SECTION.

ALL DIMENSIONS ARE IN INCHES (MILLIMETERS) UNLESS OTHERWISE SHOWN.

MODEL: Default
FILE NAME: G:\LP20720 IDOT D1 PTB 204-001 Michigan City Rd Bridge\03A Design\01 CADD\02 Sheet\Roadway\149-D162R62-sht-DOT STD .dgn

DELTA ENGINEERING GROUP, LLC
CONSULTING ENGINEERS, CONSTRUCTION MANAGERS, SURVEYORS
111 W JACKSON BLVD, SUITE 910
CHICAGO, IL 60604
T 312.377.7700, F 312.427 6145

USER NAME = denisb	DESIGNED - MA/DB	REVISED -	
	DRAWN - DB	REVISED -	
PLOT SCALE = 40.0000 ' / in.	CHECKED - MA	REVISED -	
PLOT DATE = 12/13/2024	DATE - 12/13/2024	REVISED -	

STATE OF ILLINOIS
DEPARTMENT OF TRANSPORTATION

TRAFFIC CONTROL DETAILS FOR FREEWAY
SHOULDER CLOSURES AND PARTIAL RAMP CLOSURES

SCALE: N/A | SHEET 08 OF 13 SHEETS | STA. N/A TO STA. N/A

F.A.I. RTE.	SECTION	COUNTY	TOTAL SHEETS	SHEET NO.
94	FAI 94 22 STRUCTURE 2	COOK	157	152
	TC-17	CONTRACT NO. 62R62		
	ILLINOIS	FED. AID PROJECT		

SIGNING FOR FLAGGING OPERATIONS AT WORK ZONE OPENINGS

WORK ZONE EXIT OPENING

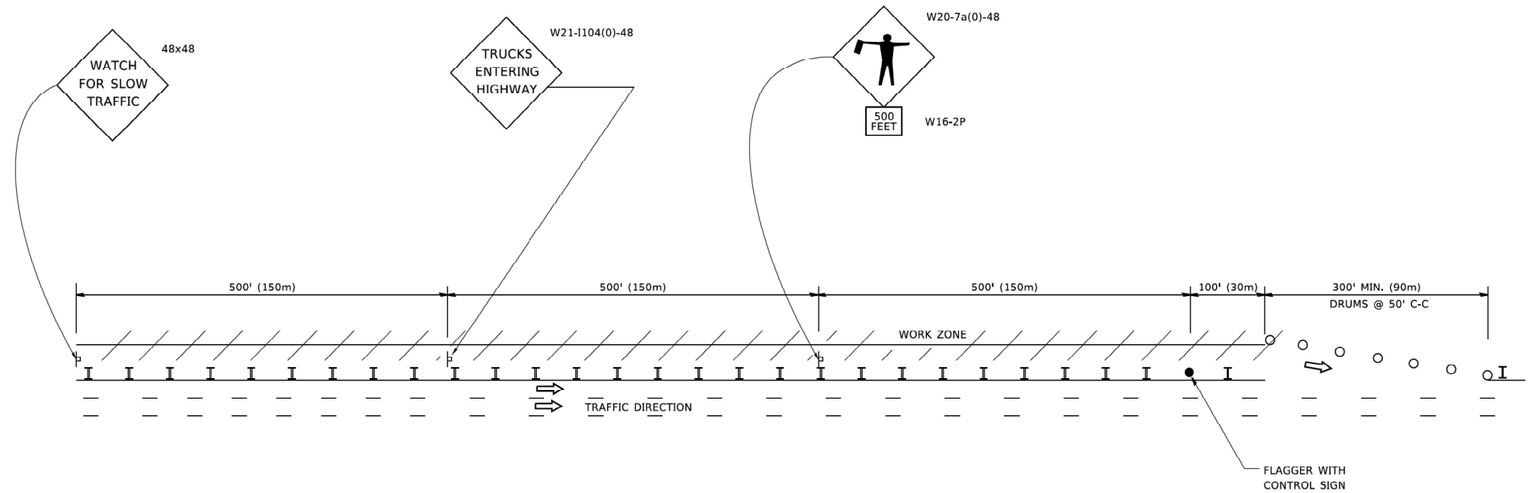

WORK ZONE ENTRY OPENING

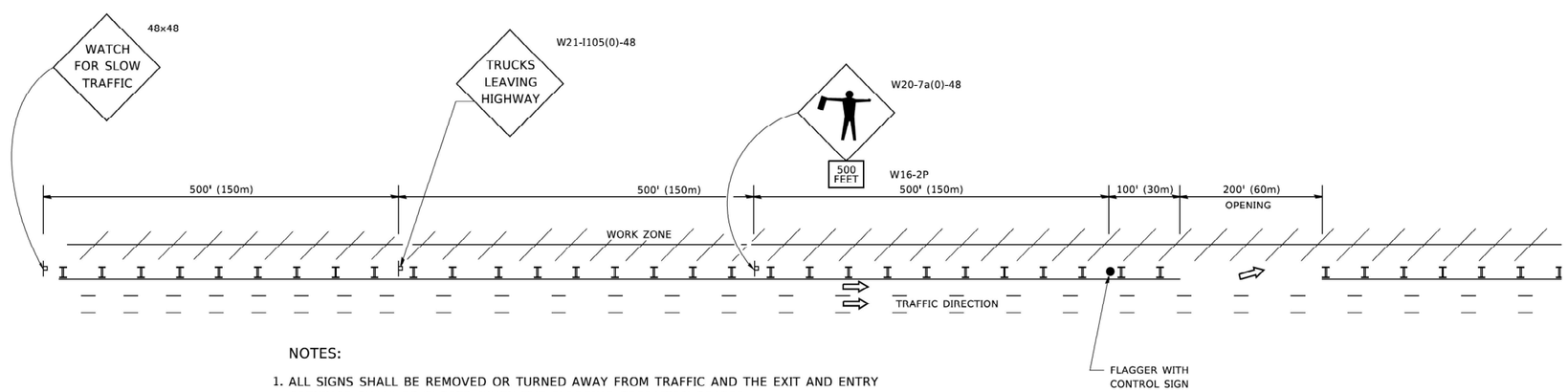

NOTES:

1. ALL SIGNS SHALL BE REMOVED OR TURNED AWAY FROM TRAFFIC AND THE EXIT AND ENTRY OPENINGS SHALL BE CLOSED WHEN THE FLAGGING OPERATION CEASES. NON OPERATING EQUIPMENT SHALL COMPLY WITH ARTICLE 701.11
2. WORK ZONE OPENINGS SHALL BE A MINIMUM OF ONE HALF MILE APART AND A MINIMUM OF ONE QUARTER MILE FROM ALL ENTRANCE AND EXIT RAMPS.
3. EXITING THE WORK ZONE AT ANY PLACE OTHER THAN AT A WORK ZONE EXIT OPENING WILL BE PROHIBITED.
4. ALL VEHICLES SHALL ENTER THE WORK ZONE AT ENTRY OPENINGS, USING THEIR TURN SIGNALS TO WARN MOTORISTS
5. FLAGGERS SHALL NOT STOP TRAFFIC OR DIRECT TRAFFIC INTO AN ADJACENT LANE.

ALL DIMENSIONS ARE IN INCHES (MILLIMETERS) UNLESS OTHERWISE SHOWN

DELTA ENGINEERING GROUP, LLC
CONSULTING ENGINEERS, CONSTRUCTION MANAGERS, SURVEYORS
111 W JACKSON BLVD, SUITE 910
CHICAGO, IL 60604
T 312.377.7700, F 312.427 6145

USER NAME = denisb	DESIGNED - MA/DB	REVISED -	
	DRAWN - DB	REVISED -	
PLOT SCALE = 40.0000 ' / in.	CHECKED - MA	REVISED -	
PLOT DATE = 12/13/2024	DATE - 12/13/2024	REVISED -	

STATE OF ILLINOIS
DEPARTMENT OF TRANSPORTATION

FREEWAY /EXPRESSWAY SIGNING FOR FLAGGING OPERATIONS AT WORK ZONE OPENINGS ON FREEWAYS /EXPRESSWAYS

SCALE: N/A | SHEET 09 OF 13 SHEETS | STA. N/A TO STA. N/A

F.A.I. RTE.	SECTION	COUNTY	TOTAL SHEETS	SHEET NO.
94	FAI 94 22 STRUCTURE 2	COOK	157	153
	TC-18	CONTRACT NO. 62R62		
	ILLINOIS	FED. AID PROJECT		

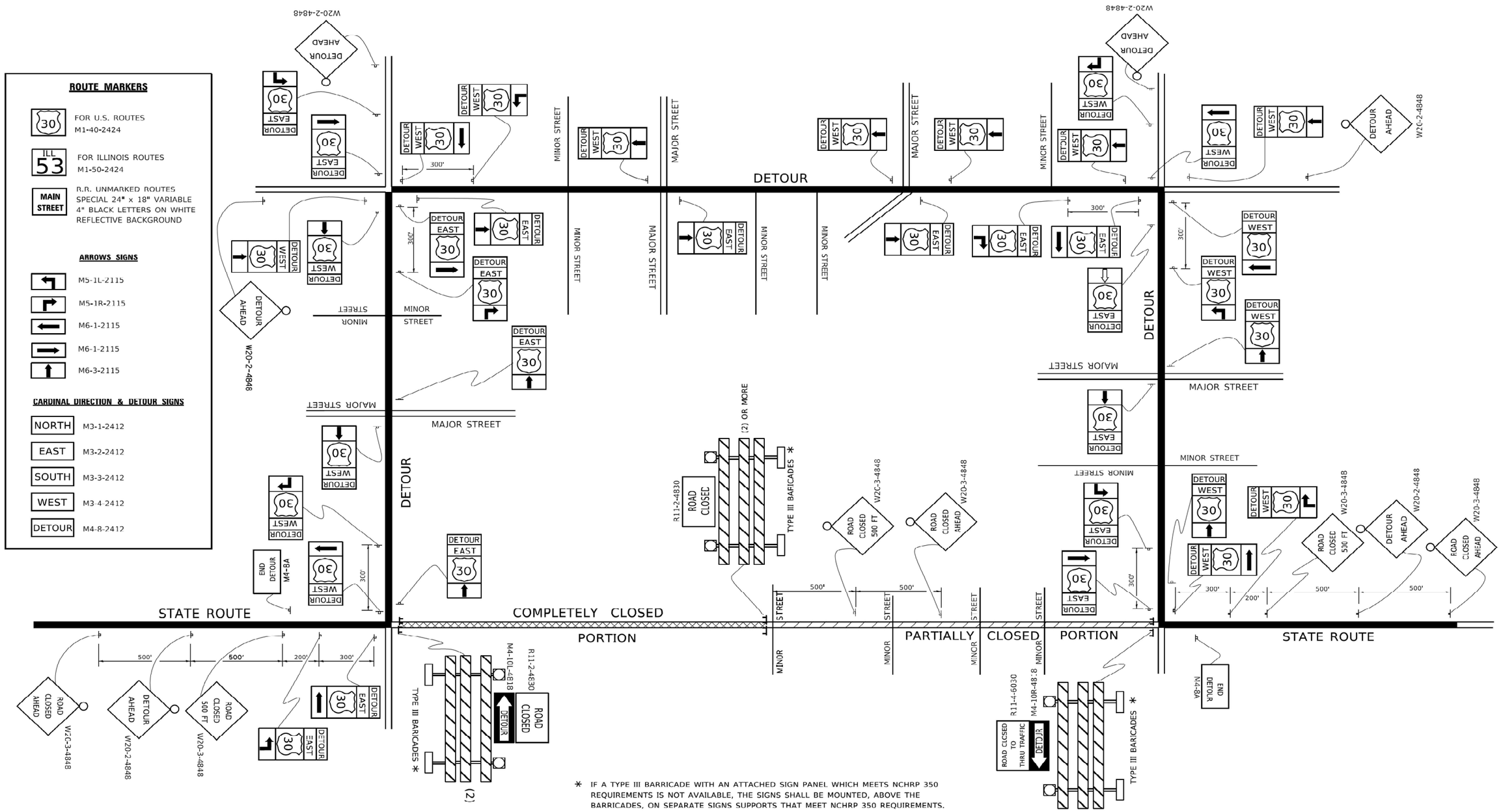

MODEL: $MODELNAME$
FILE NAME: G:\LP220720 IDOT D1 PTB 204-001 Michigan City Rd Bridge\03A Design\31 CADD\32 Sheet\Roadway\151-D162R62-sht-DOT STD .dgn

DELTA ENGINEERING GROUP, LLC
CONSULTING ENGINEERS, CONSTRUCTION MANAGERS, SURVEYORS
111 W JACKSON BLVD, SUITE 910
CHICAGO, IL 60604
T 312.377.7700, F 312.427 6145

USER NAME = denisb	DESIGNED - MA/DB	REVISED -	
	DRAWN - DB	REVISED -	
PLOT SCALE = 40.0000 ' / in.	CHECKED - MA	REVISED -	
PLOT DATE = 12/13/2024	DATE - 12/13/2024	REVISED -	

STATE OF ILLINOIS
DEPARTMENT OF TRANSPORTATION

DETOUR SIGNING
FOR CLOSING STATE HIGHWAYS

SCALE: N/A | SHEET 10 OF 14 SHEETS | STA. N/A | TO STA. N/A

F.A.I. RTE.	SECTION	COUNTY	TOTAL SHEETS	SHEET NO.
94	FAI 94 22 STRUCTURE 2	COOK	157	154
	TC-21	CONTRACT NO. 62R62		
		ILLINOIS	FED. AID PROJECT	

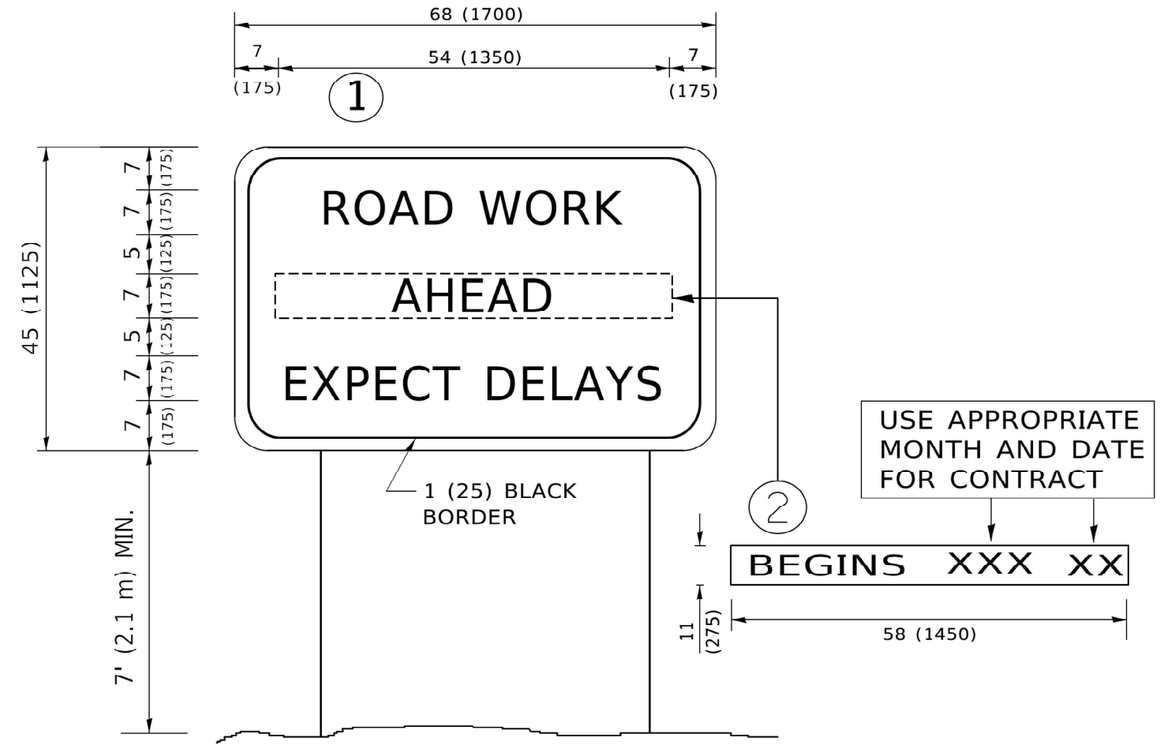

NOTES:

1. USE BLACK LETTERING ON ORANGE BACKGROUND.
2. ERECT SIGNS IN ADVANCE OF THE LOCATION FOR THE "ROAD CONSTRUCTION AHEAD" SIGN AT LOCATIONS AS DIRECTED BY THE ENGINEER.
3. ERECT SIGN (1) WITH INSTALLED PANEL (2) ONE WEEK PRIOR TO THE START OF CONSTRUCTION.
4. REMOVE PANEL (2) SOON AFTER THE START OF CONSTRUCTION.
5. SEE SPECIAL PROVISION FOR "TEMPORARY INFORMATION SIGNING" FOR ADDITIONAL INFORMATION.
6. ONE SIGN ASSEMBLY EQUALS 25.70 SQ. FT. (2.3 SQ. M.)
7. SHALL BE PAID FOR AS TEMPORARY INFORMATION SIGNING.

ALL DIMENSIONS ARE IN INCHES (MILLIMETERS) UNLESS OTHERWISE SHOWN.

MODEL: Default
FILE NAME: G:\LP20720 IDOT D1 PTB 204-001 Michigan City Rd Bridge\03A Design\01 CADD\02 Sheet\Roadway\152-D16R62-sht-DOT STD .dgn

DELTA ENGINEERING GROUP, LLC
CONSULTING ENGINEERS, CONSTRUCTION MANAGERS, SURVEYORS
111 W JACKSON BLVD, SUITE 910
CHICAGO, IL 60604
T 312.377.7700, F 312.427 6145

USER NAME = denisb	DESIGNED - MA/DB	REVISED -	
	DRAWN - DB	REVISED -	
PLOT SCALE = 40.0000 ' / in.	CHECKED - MA	REVISED -	
PLOT DATE = 12/13/2024	DATE - 12/13/2024	REVISED -	

STATE OF ILLINOIS
DEPARTMENT OF TRANSPORTATION

ARTERIAL ROAD
INFORMATION SIGN

SCALE: N/A | SHEET 11 OF 14 SHEETS | STA. N/A | TO STA. N/A

F.A.I. RTE.	SECTION	COUNTY	TOTAL SHEETS	SHEET NO.
94	FAI 94 22 STRUCTURE 2	COOK	157	155
	TC-22	CONTRACT NO. 62R62		
		ILLINOIS	FED. AID PROJECT	

METHOD OF MEASUREMENT

REFER TO SECTION 442 OF THE STANDARD SPECIFICATIONS FOR ROAD AND BRIDGE CONSTRUCTION AND THE RECURRING SPECIAL PROVISION "PATCHING WITH HOT-MIX ASPHALT OVERLAY REMOVAL."

BASIS OF PAYMENT

1. REFER TO SECTION 442 OF THE STANDARD SPECIFICATIONS FOR ROAD AND BRIDGE CONSTRUCTION AND THE RECURRING SPECIAL PROVISION "PATCHING WITH HOT-MIX ASPHALT OVERLAY REMOVAL."
2. SAW CUT/SCORING OF EXISTING HMA OVERLAY IS INCLUDED IN THE COST OF PAVEMENT PATCHING.
3. SAW CUT/SCORING OF EXISTING PAVEMENT IS INCLUDED IN THE COST OF PAVEMENT PATCHING.

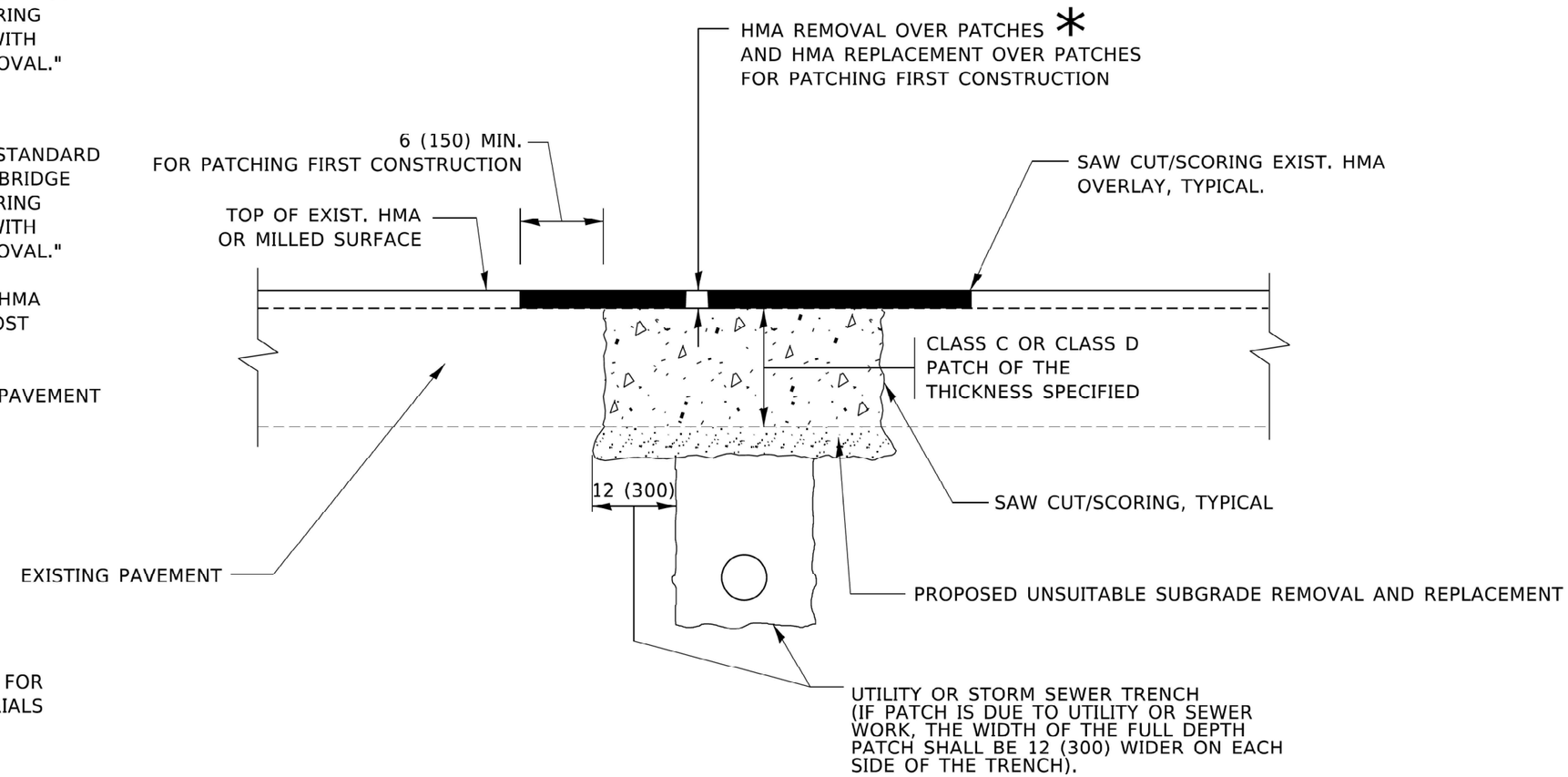

* SEE TYPICAL SECTIONS FOR THICKNESS AND MATERIALS

SEQUENCE OF CONSTRUCTION (PATCHING FIRST)

1. REMOVE THE EXISTING HMA MATERIAL OVER THE AREA TO BE PATCHED.
2. REMOVE AND REPLACE WITH CLASS C OR D PATCH.
3. REPLACE HMA MATERIAL OVER THE AREA TO BE PATCHED.

SEQUENCE OF CONSTRUCTION (MILLING FIRST)

1. MILL HMA FIRST IF THERE IS AT LEAST 4½ INCHES OR MORE OF HMA MATERIAL ON TOP OF THE EXISTING PAVEMENT OR IF THE PAVEMENT IS FULL DEPTH HMA. A MINIMUM OF 2 INCHES OF HMA MATERIAL SHALL BE IN PLACE AFTER MILLING.
2. REMOVE AND REPLACE WITH FULL DEPTH CLASS D PATCHES TO TOP OF MILLED SURFACE.

ALL DIMENSIONS ARE IN INCHES (MILLIMETERS) UNLESS OTHERWISE SHOWN.

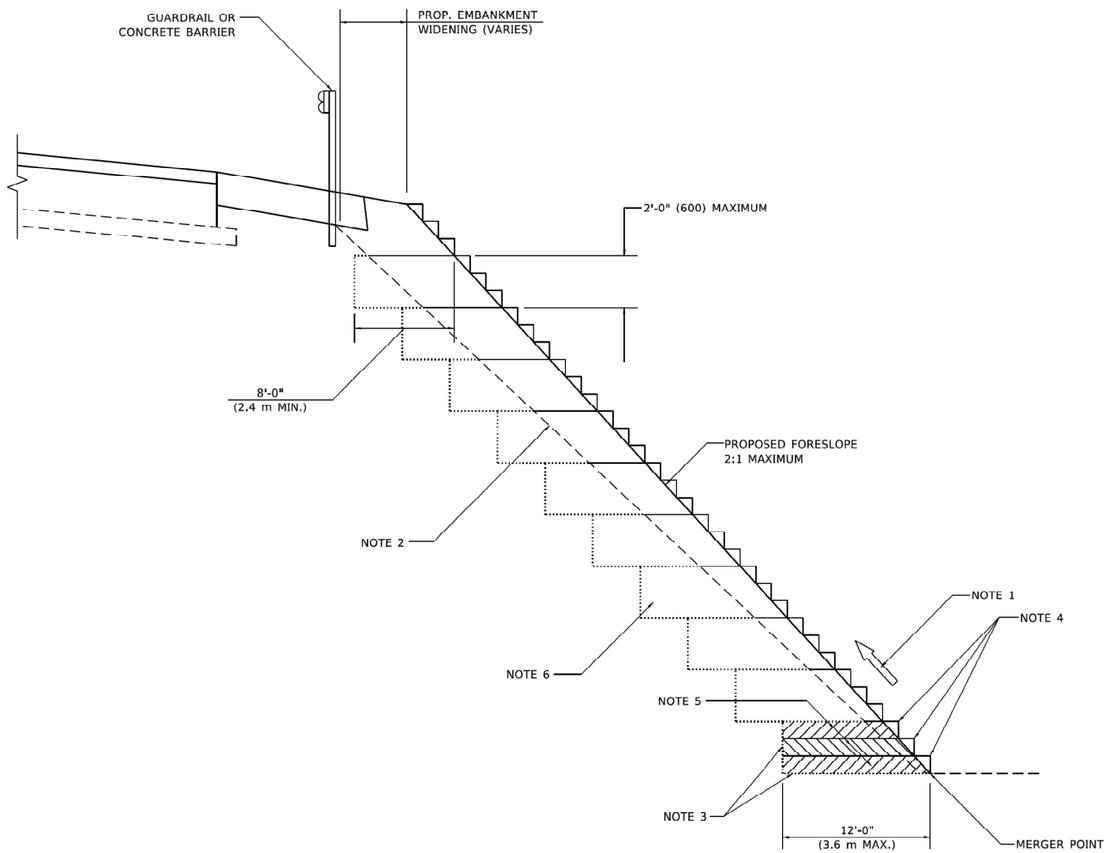

TYPICAL BENCHING DETAIL
FOR EMBANKMENT

GENERAL NOTES

1. CONSTRUCT SUCCEEDING BENCH CUTS AND EMBANKMENT PLACEMENT AND COMPACTION FROM BOTTOM TO TOP IN STAIRSTEP FASHION.
2. EXISTING FORESLOPE PREPARED IN ACCORDANCE WITH ARTICLE 205.03 OF THE STANDARD SPECIFICATIONS.
3. BENCH CUT EXISTING SLOPE TYPICAL FOR EACH STEP.
4. TRIM TO FINAL SLOPE.
5. EQUAL 8-INCH (200) LIFTS OF EMBANKMENT COMPACTED IN ACCORDANCE WITH ARTICLE 205.05 OF THE STANDARD SPECIFICATIONS.

BASIS OF PAYMENT

1. EXCAVATION OF BENCH CUTS WITHIN EXISTING EMBANKMENT WILL BE PAID FOR AT THE CONTRACT UNIT PRICE PER CUBIC METER OR CUBIC YARD FOR "EARTH EXCAVATION". THIS PRICE WILL INCLUDE ALL LABOR AND MATERIAL, NO ADDITIONAL COMPENSATION WILL BE ALLOWED.

ALL DIMENSIONS ARE IN INCHES (MILLIMETERS)
UNLESS OTHERWISE SHOWN.

MODEL: Default
FILE NAME: G:\LP20220 IDOT D1 PTB 204-001 Michigan City Rd Bridge\03A Design\01 CADD\02 Sheet\Roadway\159-D1-62R62-sht-DOT STD .dgn

DELTA ENGINEERING GROUP, LLC
CONSULTING ENGINEERS, CONSTRUCTION MANAGERS, SURVEYORS
111 W JACKSON BLVD, SUITE 910
CHICAGO, IL 60604
T 312.377.7700, F 312.427 6145

USER NAME = denisb	DESIGNED - MA/DB	REVISED -
	DRAWN - DB	REVISED -
PLOT SCALE = 20.0000 ' / in.	CHECKED - MA	REVISED -
PLOT DATE = 12/13/2024	DATE - 12/13/2024	REVISED -

STATE OF ILLINOIS
DEPARTMENT OF TRANSPORTATION

BENCHING DETAIL
FOR EMBANKMENT WIDENING

SCALE: 1:10 | SHEET 13 OF 13 SHEETS | STA. N/A TO STA. N/A

F.A.I. RTE.	SECTION	COUNTY	TOTAL SHEETS	SHEET NO.
94	FAI 94 22 STRUCTURE 2	COOK	157	157
	BD-51	CONTRACT NO. 62R62		
	ILLINOIS	FED. AID PROJECT		