04-25-2025 LETTING ITEM 068

F.A.P. RTE.	SECTION	COUNTY	TOTAL SHEETS	SHEET NO.
316	(116)CGR,SLP	BUREAU	25	1
	ILLINOIS	CONTRACT NO. 66P89		

STATE OF ILLINOIS
DEPARTMENT OF TRANSPORTATION

INDEX OF SHEETS

HIGHWAY STANDARDS

000001-08	STANDARD SYMBOLS, ABBREVIATIONS AND PATTERNS
001001-02	AREAS OF REINFORCEMENT BARS
001006	DECIMAL OF AN INCH AND OF A FOOT
280001-07	TEMPORARY EROSION CONTROL SYSTEMS
442201-03	CLASS B PATCHES
542301-03	PRECAST REINFORCED CONCRETE FLARED END SECTION
542306-03	PRECAST REINFORCED CONCRETE ELLIPTICAL FLARED END SECTION
602306-03	INLET- TYPE B
604001-05	FRAME AND LIDS, TYPE 1
604021-04	BASE, FRAME AND LIDS, TYPE 5
606401-02	PAVED DITCH
630001-13	STEEL PLATE BEAM GUARDRAIL
630106-02	LONG-SPAN GUARDRAIL OVER CULVERT
701001-02	OFF-ROAD OPERATIONS 2L, 2W, MORE THAN 15' AWAY
701006-05	OFF-ROAD OPERATIONS 2L, 2W, 15' TO 24" FROM PAVEMENT EDGE
701201-05	LANE CLOSURE, 2L, 2W, DAY ONLY, FOR SPEEDS ≥ 45 MPH
701301-04	LANE CLOSURE, 2L, 2W, SHORT TIME OPERATIONS
701326-04	LANE CLOSURE, 2L, 2W, PAVEMENT WIDENING, FOR SPEEDS ≥ 45 MPH
701901-10	TRAFFIC CONTROL DEVICES
782006-01	GUARDRAIL AND BARRIER WALL REFLECTOR MOUNTING DETAILS

PROPOSED HIGHWAY PLANS

F.A.P. ROUTE 316 (IL 26)
SECTION (116)DR,T
DRAINAGE AND STORM SEWER
BUREAU COUNTY

C-93-035-25

BEGIN IMPROVEMENT
COUNTY RD. 1950 AVE. N.
STA. 1556+30

END IMPROVEMENT
CITY COUNTY PARK RD.
STA. 1615+32

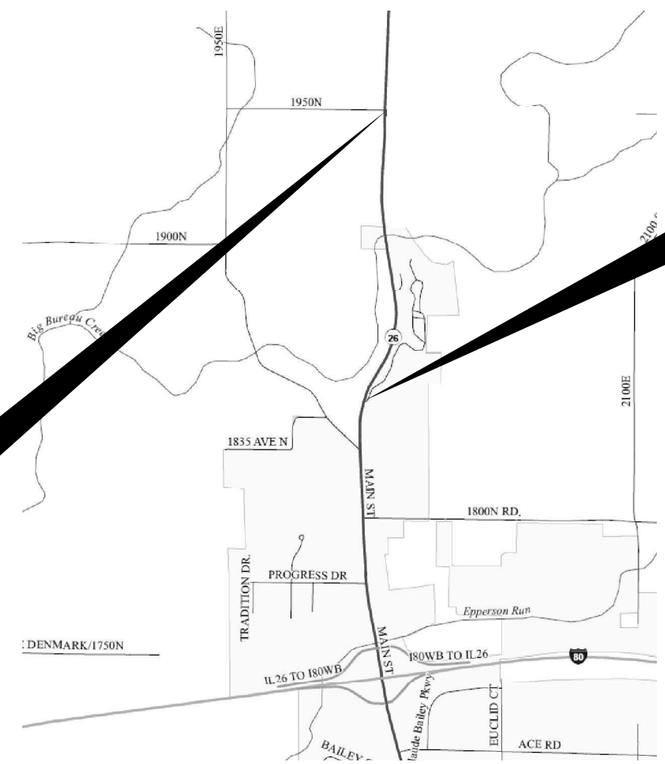

D-93-012-25

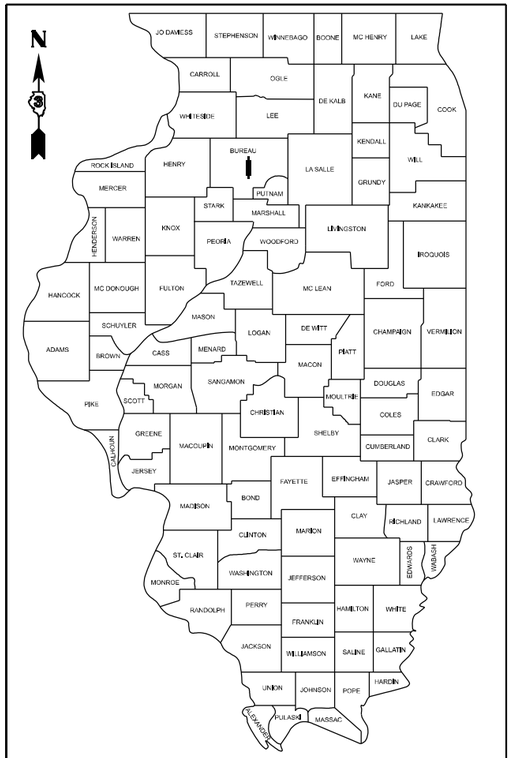

LOCATION OF SECTION INDICATED THUS: -

FUNCTIONAL CLASSIFICATION
URBAN - OTHER PRINCIPAL ARTERIAL
F.A.P. ROUTE 316 (IL 26)
2023 ADT = 2,650
P.V. 75.5% S.U. 8.5% M.U. 16.0%

FULL SIZE PLANS HAVE BEEN PREPARED USING STANDARD ENGINEERING SCALES. REDUCED SIZED PLANS WILL NOT CONFORM TO STANDARD SCALES. IN MAKING MEASUREMENTS ON REDUCED PLANS, THE ABOVE SCALES MAY BE USED.

J.U.L.I.E.
JOINT UTILITY LOCATION INFORMATION FOR EXCAVATION
1-800-892-0123
OR 811

STATE OF ILLINOIS
DEPARTMENT OF TRANSPORTATION

SUBMITTED: February 14, 2025
Trisha Thompson mns
REGIONAL ENGINEER

March 21, 2025
ENGINEER OF DESIGN AND ENVIRONMENT

March 21, 2025
DIRECTOR OF HIGHWAYS, PROJECT IMPLEMENTATION

PROJECT ENGINEER JUNIOR SENAT P.E.
UNIT CHIEF RON WOODSHANK
DISTRICT 3 (815) 434-6131

CONTRACT NO. 66P89

GROSS LENGTH = 5,989 FT. = 1.1 MILES
NET LENGTH = 250 FT. = 0.05 MILES

PRINTED BY THE AUTHORITY OF THE STATE OF ILLINOIS

GENERAL NOTES

EXCEPT AS NOTED ON THE PLANS, PAVEMENT GRADES SHOWN ARE AT THE TOP OF PAVEMENT SURFACES.

BEFORE ORDERING PIPE CULVERTS OR PIPE DRAINS, THE CONTRACTOR SHALL CONSULT THE ENGINEER FOR EXACT LENGTHS.

THE FINISHED EARTHWORK SHALL HAVE A VEGETATION SUSTAINING SOIL COVERING THE TOP FOUR INCHES (100 MILLIMETERS) IN AREAS TO BE SEEDED OR SODDED. THE VEGETATION SUSTAINING SOIL REQUIRED WILL NOT BE PAID FOR SEPARATELY BUT WILL BE INCLUDED IN THE COST OF FURNISHED EXCAVATION

THE FOLLOWING RATES OF APPLICATION HAVE BEEN USED IN CALCULATING PLAN QUANTITIES:

RIPRAP R4	0.6	TONS / SY YD
	1.36	TON / CU YD
GRANULAR MATERIALS	2.05	TONS / CU YD

COMMITMENTS

NONE

HMA MIXTURE REQUIREMENT TABLE

LOCATION(S):	ENTIRE PROJECT	ENTIRE PROJECT
MIXTURE USE(S)	CLASS D PATCH 9" BOTTOM LIFT(S)	CLASS D PATCH 9" TOP LIFT
BINDER GRADE (PG):	PG 64-22	PG 64-22
DESIGN AIR VOIDS:	4.0% @ N50	4.0% @ N50
MIXTURE COMPOSITION: (MIXTURE GRADATION)	IL 19.0	IL 9.5
FRICTION AGGREGATE:		MIXTURE C
MIXTURE WEIGHT:	112.0 LB/SY/IN	112.0 LB/SY/IN
QUALITY MANAGEMENT PROGRAM:	QC/QA	QC/QA
SUBLOT SIZE:	N/A	N/A
DENSITY TEST METHOD:	CORES/NUCLEAR	CORES/NUCLEAR
MATERIAL TRANSFER DEVICE (REC'D)	NO	NO

STATE OF ILLINOIS
DEPARTMENT OF TRANSPORTATION
DISTRICT THREE
AS BUILT INFORMATION

SUPERVISING CONSTRUCTION FIELD ENGINEER

RESIDENT ENGINEER / TECHNICIAN

START & END DATES OF CONSTRUCTION:

INSPECTORS:

CODE NO.	ITEM	UNIT	TOTAL QUANTITY	CONSTRUCTION CODE CONTRACT MAINTENANCE 100% STATE ROADWAY 0004 URBAN
20200100	EARTH EXCAVATION	CU YD	545	545
20201200	REMOVAL AND DISPOSAL OF UNSUITABLE MATERIAL	CU YD	545	545
20400800	FURNISHED EXCAVATION	CU YD	455	455
21400100	GRADING AND SHAPING DITCHES	FOOT	191	191
25000210	SEEDING, CLASS 2A	ACRE	0.41	0.41
25000400	NITROGEN FERTILIZER NUTRIENT	POUND	37	37
25000500	PHOSPHORUS FERTILIZER NUTRIENT	POUND	37	37
25000600	POTASSIUM FERTILIZER NUTRIENT	POUND	37	37
25100635	HEAVY DUTY EROSION CONTROL BLANKET	SQ YD	1104	1104
28000400	PERIMETER EROSION BARRIER	FOOT	400	400
28100107	STONE RIPRAP, CLASS A4	SQ YD	145	145
28200200	FILTER FABRIC	SQ YD	145	145
40200800	AGGREGATE SURFACE COURSE, TYPE B	TON	5	5
44000400	GUTTER REMOVAL	FOOT	359	359

***SPECIALITY ITEMS**

CODE NO.	ITEM	UNIT	TOTAL QUANTITY	CONSTRUCTION CODE CONTRACT MAINTENANCE 100% STATE ROADWAY 0004 URBAN
44201753	CLASS D PATCHES, TYPE II, 9 INCH	SQ YD	12	12
50105220	PIPE CULVERT REMOVAL	FOOT	108	108
542A5473	PIPE CULVERTS, CLASS A, TYPE 1 EQUIVALENT ROUND-SIZE 18"	FOOT	84	84
54213660	PRECAST REINFORCED CONCRETE FLARED END SECTIONS 15"	EACH	2	2
54214713	PRECAST REINFORCED CONCRETE FLARED END SECTIONS - ELLIPTICAL, EQUIVALENT ROUND-SIZE 18"	EACH	4	4
550B0050	STORM SEWERS, CLASS B, TYPE 1 12"	FOOT	758	758
550B0070	STORM SEWERS, CLASS B, TYPE 1 15"	FOOT	255	255
60108100	PIPE UNDERDRAINS 4" (SPECIAL)	FOOT	22	22
60240215	INLETS, TYPE B, TYPE 1 FRAME, CLOSED LID	EACH	4	4
60500040	REMOVING MANHOLES	EACH	2	2
60600095	CLASS SI CONCRETE (OUTLET)	CU YD	22	22
60602500	CONCRETE GUTTER, TYPE A	FOOT	60	60
60615400	PAVED DITCH, TYPE A-15	FOOT	259	259
* 63000001	STEEL PLATE BEAM GUARDRAIL, TYPE A, 6 FOOT POSTS	FOOT	700	700

***SPECIALITY ITEMS**

	CODE NO.	ITEM	UNIT	TOTAL QUANTITY	CONSTRUCTION CODE CONTRACT MAINTENANCE 100% STATE ROADWAY 0004 URBAN
*	63000370	LONG-SPAN GUARDRAIL OVER CULVERT, 25 FT SPAN	FOOT	50	50
*	63100167	TRAFFIC BARRIER TERMINAL, TYPE 1 (SPECIAL) TANGENT	EACH	1	1
	63200310	GUARDRAIL REMOVAL	FOOT	750	750
	67100100	MOBILIZATION	L SUM	1	1
	70100450	TRAFFIC CONTROL AND PROTECTION, STANDARD 701201	L SUM	1	1
	70100500	TRAFFIC CONTROL AND PROTECTION, STANDARD 701326	L SUM	1	1
*	78200005	GUARDRAIL REFLECTORS, TYPE A	EACH	19	19
	X2010505	CLEARING (SPECIAL)	L SUM	1	1
	X2130010	EXPLORATION TRENCH (SPECIAL)	FOOT	200	200
	X4402720	GUTTER REMOVAL (SPECIAL)	FOOT	280	280
	X5036002	CONCRETE HEADWALL REPAIR	EACH	1	1
	X6010003	PIPE DRAIN REMOVAL	FOOT	31	31
	X6011705	PIPE DRAINS 6" (SPECIAL)	FOOT	107	107
	X6013700	PIPE UNDERDRAIN REMOVAL (SPECIAL)	FOOT	20	20

***SPECIALITY ITEMS**

CODE NO.	ITEM	UNIT	TOTAL QUANTITY	CONSTRUCTION CODE CONTRACT MAINTENANCE 100% STATE ROADWAY 0004 URBAN
X6020084	MANHOLE (SPECIAL)	EACH	2	2
X6060097	CLASS SI CONCRETE (OUTLET), SPECIAL	CU YD	3.7	3.7
X6062700	CONCRETE GUTTER, TYPE A (SPECIAL)	FOOT	263	263
X6330103	REMOVE AND RE-ERECT TRAFFIC BARRIER TERMINAL, TYPE 1 SPECIAL, TANGENT	EACH	1	1
X6333500	TRAFFIC BARRIER TERMINAL REMOVAL	EACH	1	1
X6350204	LINEAR DELINEATOR PANELS, 4 INCH	EACH	19	19
X7200061	TEMPORARY INFORMATION SIGNING	SQ FT	42	42

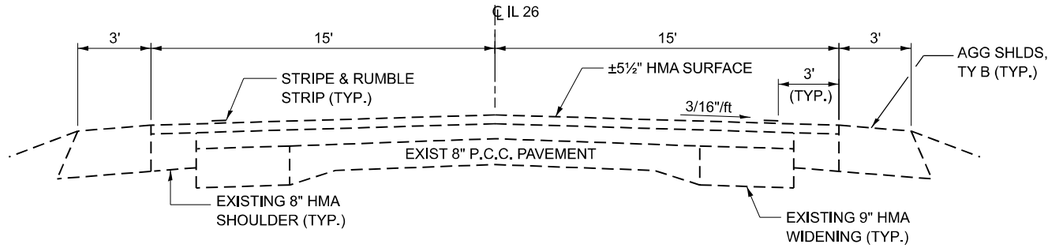

TYPICAL SECTION 1

LOOKING SOUTH

LT	RT
STA. 1556+30 TO STA. 1557+16	STA. 1556+30 TO STA. 1558+02
STA. 1568+40 TO STA. 1575+50	STA. 1568+40 TO STA. 1575+50
STA. 1584+00 TO STA. 1599+74	STA. 1584+00 TO STA. 1596+58
STA. 1614+78 TO STA. 1615+32	STA. 1612+29 TO STA. 1615+32

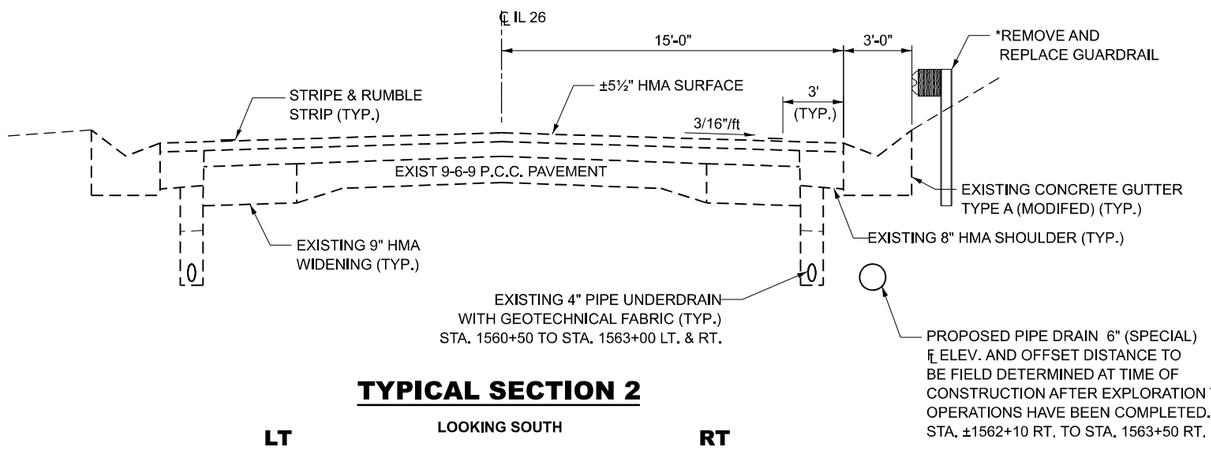

TYPICAL SECTION 2

LOOKING SOUTH

LT	RT
STA. 1557+16 TO STA. 1568+40	STA. 1558+02 TO STA. 1568+40
STA. 1599+74 TO STA. 1614+78	*STA. 1596+58 TO STA. 1612+29

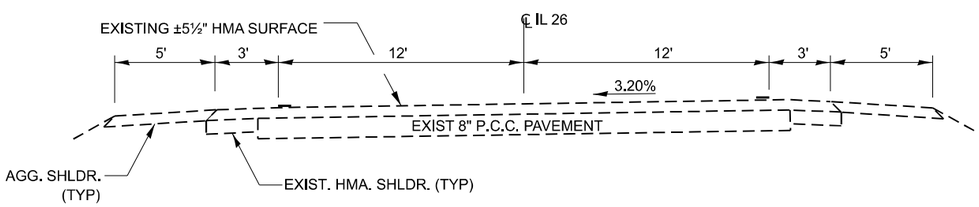

TRYPCAL SECTION 3

LOOKING SOUTH

LT	RT
STA. 1575+50 TO STA. 1577+84	STA. 1575+50 TO STA. 1577+84

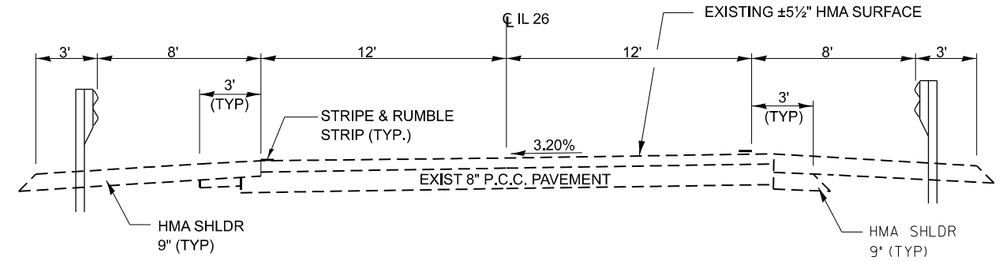

TYPICAL SECTION 4

LOOKING SOUTH

LT	RT
STA. 1577+84 TO STA. 1578+84	STA. 1577+84 TO STA. 1578+84

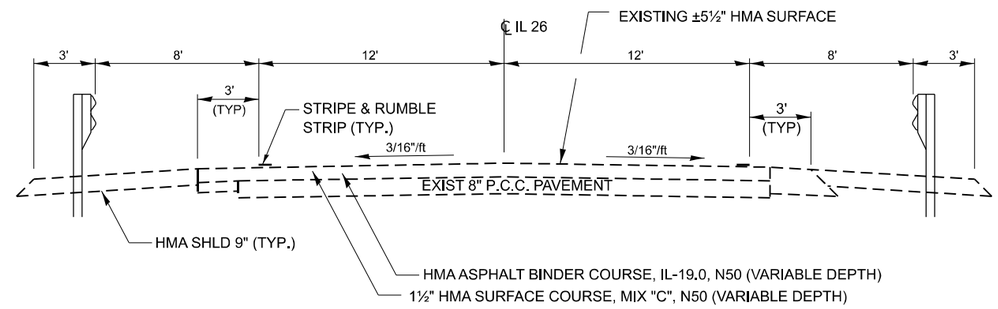

TYPICAL SECTION 5

LOOKING SOUTH

LT	RT
STA. 1581+99 TO STA. 1583+25	STA. 1581+99 TO STA. 1583+25

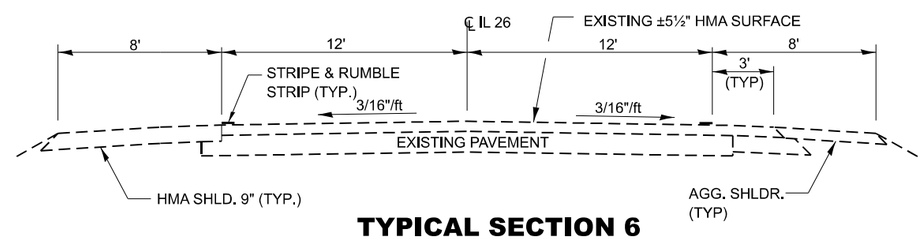

TYPICAL SECTION 6

LOOKING SOUTH

LT	RT
STA. 1583+25 TO STA. 1584+00	STA. 1583+25 TO STA. 1584+00

MODEL: Default
FILE NAME: c:\pw_work\pwidot\woodshank\d1027988\66P89.dgn

USER NAME = ronald.woodshank	DESIGNED - RW	REVISED -	STATE OF ILLINOIS DEPARTMENT OF TRANSPORTATION
	DRAWN - RW	REVISED -	
	CHECKED - 7/30/2024	REVISED -	
PLOT DATE = 1/13/2025	DATE -	REVISED -	

TYPICAL SECTION

SCALE: SHEET 1 OF 1 SHEETS STA. TO STA.

F.A.P. RTE.	SECTION	COUNTY	TOTAL SHEETS	SHEET NO.
316	(116)DR,T	BUREAU	25	7
		CONTRACT NO. 66P89		
		ILLINOIS	FED. AID PROJECT	

SCHEDULE - DRAINAGE

LOCATION				EXPLORATION TRENCH (SPECIAL)	GRADING AND SHAPING DITCHES	REMOVING MANHOLES	PIPE DRAIN REMOVAL	PIPE CULVERT REMOVAL	PIPE UNDERDRAIN REMOVAL (SPECIAL)	PIPE DRAIN 6" (SPECIAL)	PIPE CULVERTS CLASS A TYPE 1 EQUIVALENT ROUND SIZE 18"	STORM SEWER CLASS B TYPE 1 12"	STORM SEWER CLASS B TYPE 1 15"	PRECAST REINFORCED CONCRETE FLARED END SECTION 15"	PRECAST REINFORCED CONCRETE FLARED END SECTION ELLIPTICAL EQUIVALENT ROUND SIZE 18"	INLETS TYPE B TYPE 1 FRAME, CLOSED LID	MANHOLE, (SPECIAL)	PAVED DITCH TYPE A-15	PIPE UNDERDRAINS 4" (SPECIAL)
STA.	TO	STA.	LT/RT	FOOT	FOOT	EACH	FOOT	FOOT	FOOT	FOOT	FOOT	FOOT	FOOT	EACH	EACH	EACH	EACH	FOOT	FOOT
1563+25	TO	1563+37	LT																10
1563+37			LT			1											1		
1563+37	TO	1563+48	LT				11					11							
1563+48	TO	1565+33	LT									185							
1565+33			LT													1			
1565+33	TO	1567+15	LT									182							
1567+15			LT													1			
1567+15	TO	1568+35	LT										120						
1568+35	TO	1569+44	LT		109													109	
1569+44														1					
1569+44	TO	1569+50	LT					6							1				
1569+50	TO	1569+92	LT					42			42								
1569+92	TO	1569+98	LT					6							1				
1569+98	TO	1570+80	LT		82														
SUBTOTAL				0	191	1	11	54	0	0	42	378	120	1	2	2	1	109	10
1561+00	TO	1562+28	RT	128															
1562+28	TO	1563+00	RT	72						72									
1563+00	TO	1563+25	RT							25									
1563+25	TO	1563+35	RT						10	10									10
1563+35			RT			1											1		
1563+35	TO	1563+55	RT				20					20							
1563+55	TO	1565+33										178							
1565+33			RT													1			
1565+33	TO	1567+15	RT									182							
1567+15			RT													1			
1567+15	TO	1568+50	RT										135						
1568+50	TO	1568+56	RT											1					
1568+56	TO	1570+06	RT															150	
1570+06	TO	1570+12	RT					6							1				
1570+12	TO	1570+54	RT					42			42								
1570+54	TO	1570+60	RT					6							1				
SUBTOTAL				200	0	1	20	54	10	107	42	380	135	1	2	2	1	150	10
TOTAL				**200**	**191**	**2**	**31**	**108**	**10**	**107**	**84**	**758**	**255**	**2**	**4**	**4**	**2**	**259**	**20**

MODEL: Default
FILE NAME: c:\pw_work\pwidot\woodshankf\d1027988\66P89.dgn

USER NAME = ronald.woodshank	DESIGNED - RW	REVISED -	STATE OF ILLINOIS DEPARTMENT OF TRANSPORTATION
	DRAWN - RW	REVISED -	
	CHECKED - 7/30/2024	REVISED -	
PLOT DATE = 11/1/2024	DATE -	REVISED -	

SCHEDULES

SCALE: | SHEET 1 OF 3 SHEETS | STA. TO STA.

F.A.P. RTE.	SECTION	COUNTY	TOTAL SHEETS	SHEET NO.
316	(116)DR,T	BUREAU	25	8
		CONTRACT NO. 66P89		
		ILLINOIS	FED. AID PROJECT	

SCHEDULE - GUTTER

LOCATION				GUTTER REMOVAL	GUTTER REMOVAL (SPECIAL)	CONCRETE GUTTER TYPE A	CONCRETE GUTTER TYPE A (SPECIAL)	CLASS SI CONCRETE (OUTLET)	CLASS SI CONCRETE (OUTLET) SPECIAL
STA.	TO	STA.	LT/RT	FOOT	FOOT	FOOT	FOOT	CU YD	CU YD
1562+77	TO	1562+87	LT	10		10			
1562+77	TO	1562+87	RT	10		10			
1562+87	TO	1563+23	LT		56			5.9	
1562+87	TO	1563+23	RT		56			6.0	
1563+23	TO	1563+53	LT	10		30			
1563+23	TO	1563+33	RT	10		10			
1568+14	TO	1568+50	LT	10		10		5.8	
1568+14	TO	1568+50	RT	10		10		7.0	
SUBTOTAL				60	112	80	0	25	0
1595+78	TO	1596+14	RT	36	56			5.8	
1596+14	TO	1596+24	RT	10			10		
1599+40	TO	1599+82	RT	42			42		
1599+82	TO	1600+18	RT		56			4.3	
1600+18	TO	1600+28	RT	10			10		
1600+89	TO	1601+09	RT	20			20		
1602+25	TO	1602+50	RT	25			25		
1603+00	TO	1603+20	RT	20			20		
1605+28	TO	1605+48	RT	20			20		
1606+43	TO	1606+68	RT	25			25		
1606+68	TO	1607+04	RT		56				3.7
1606+89	TO	1607+00	RT	11			11		
1607+48	TO	1607+88	RT	40			40		
1608+63	TO	1608+83	RT	20			20		
1609+30	TO	1609+50	RT	20			20		
SUBTOTAL				299	168	0	263	10	4
TOTAL				359	280	80	263	35	3.7

SCHEDULE - TREE REMOVAL

LOCATION				TREE REMOVAL (6 TO 15 UNITS DIAMETER)
STA.	TO	STA.	LT/RT	UNIT
1605+55			RT	72
TOTAL				72

SCHEDULE - HEADWALL

LOCATION		CONCRETE HEADWALL REPAIR
STA.	LT/RT	EACH
1599+55	RT	1
TOTAL		1

SCHEDULE - RIPRAP

LOCATION		FILTER FABRIC	STONE RIPRAP CLASS A4
STA.	LT/RT	SQ YD	SQ YD
1563+50	LT	65	65
1563+50	RT	65	65
1616+40	RT	15	15
TOTAL		145	145

SCHEDULE - PATCH

LOCATION		CLASS D PATCHES TYPE II 9 INCH
STA.	LT/RT	SQ YD
1570+35	RT	12
TOTAL		12

SCHEDULE - GUARDRAIL

LOCATION				GUARDRAIL REMOVAL	TRAFFIC BARRIER TERMINAL REMOVAL	STEEL PLATE BEAM GUARDRAIL TYPE A 6 FOOT POSTS	LONG-SPAN GUARDRAIL OVER CULVERT 25 FT SPAN	TRAFFIC BARRIER TERMINAL, TYPE 1 (SPECIAL) TANGENT	REMOVE AND RE-ERECT TRAFFIC BARRIER TERMINAL TYPE 1 SPECIAL TANGENT	GUARDRAIL REFLECTORS TYPE A	LINEAR DELINEATOR PANELS 4 INCH
STA.	TO	STA.	LT/RT	FOOT	EACH	FOOT	FOOT	EACH	EACH	EACH	EACH
1600+50	TO	1601+00	RT		1			1			
1601+00	TO	1606+50	RT	550		550				14	14
1606+50	TO	1607+00	RT	50			50			1	1
1607+00	TO	1608+50	RT	150		150				4	4
1608+50	TO	1609+00	RT						1		
TOTAL				750	1	700	50	1	1	19	19

SCHEDULE - AGGREGATE

LOCATION		AGGREGATE SURFACE COURSE TYPE A 12"
STA.	LT/RT	TON
1569+71	LT	5
TOTAL		5

MODEL: Default
FILE NAME: c:\pw_work\pwidot\woodshankrfd10279881\66P89.dgn

USER NAME = ronald.woodshank	DESIGNED - RW	REVISED -	STATE OF ILLINOIS DEPARTMENT OF TRANSPORTATION
	DRAWN - RW	REVISED -	
	CHECKED - 7/30/2024	REVISED -	
PLOT DATE = 1/13/2025	DATE -	REVISED -	

SCHEDULES

SCALE: | SHEET 2 OF 3 SHEETS | STA. | TO STA.

F.A.P. RTE.	SECTION	COUNTY	TOTAL SHEETS	SHEET NO.
316	(116)DR,T	BUREAU	25	9
		CONTRACT NO. 66P89		
		ILLINOIS	FED. AID PROJECT	

SCHEDULE - EARTHWORK

LOCATION				EARTH EXCAVATION	FURNISHED EXCAVATION	REMOVAL AND DISPOSAL OF UNSUITABLE MATERIAL
STA.	TO	STA.	LT/RT	CU YD	CU YD	CU YD
1562+80	TO	1563+00	LT		14.8	
1563+00	TO	1563+35	LT		38.9	
1563+35	TO	1563+50	LT	7.5	5.8	7.5
1563+50	TO	1564+00	LT	16.3	10.6	16.3
1564+00	TO	1564+50	LT	16.6	14.5	16.6
1564+50	TO	1565+00	LT	12.9	7.5	12.9
1565+00	TO	1565+50	LT	12.9	10.8	12.9
1565+50	TO	1566+00	LT	12.6	6.9	12.6
1566+00	TO	1566+50	LT	13.5	7.8	13.5
1566+50	TO	1567+00	LT	16.2	10.5	16.2
1567+15	TO	1567+50	LT	13.4	8.5	13.4
1567+50	TO	1568+00	LT	10.7	16.9	10.7
1568+00	TO	1568+50	LT	39.4		39.4
1568+50	TO	1569+00	LT	6.2		6.2
1569+00	TO	1569+50	LT	16.0		16.0
1569+50	TO	1569+71	LT	8.8		8.8
1569+71	TO	1570+00	LT		13.5	
SUBTOTAL				203	167	203
1561+00	TO	1561+50	RT		24.1	
1561+50	TO	1562+00	RT		24.1	
1562+00	TO	1562+50	RT		24.1	
1562+50	TO	1563+00	RT		24.1	
1563+00	TO	1563+35	RT		16.9	
1563+35	TO	1563+50	RT	5.0	3.2	5.0
1563+50	TO	1564+00	RT	11.3	56.9	11.3
1564+00	TO	1564+50	RT	15.1	9.4	15.1
1564+50	TO	1565+00	RT	17.8	12.3	17.8
1565+00	TO	1565+50	RT	19.9	14.2	19.9
1565+50	TO	1566+00	RT	18.9	13.2	18.9
1566+00	TO	1566+50	RT			
1566+50	TO	1567+00	RT	20.9	15.4	20.9
1567+00	TO	1567+50	RT	22.5	16.0	22.5
1567+50	TO	1568+00	RT	25.6	15.0	25.6
1568+00	TO	1568+50	RT	21.4	10.7	21.4
1568+50	TO	1569+00	RT	43.8		43.8
1569+00	TO	1569+50	RT	49.4		49.4
1569+50	TO	1570+00	RT	62.1		62.1
1570+00	TO	1570+27	RT			
1606+38	TO	1606+41	RT	2.0	1.9	2.0
1606+41	TO	1606+44	RT	2.0	1.9	2.0
1606+44	TO	1606+46	RT	1.2	0.8	1.2
1606+46	TO	1606+51	RT	1.1	1.9	1.1
1606+51	TO	1606+56	RT	1.0	0.9	1.0
1606+56	TO	1606+61	RT	1.0	1.0	1.0
1606+61	TO	1606+64	RT			
SUBTOTAL				342	288	342
TOTAL				545	455	545

SCHEDULE - SEEDING

LOCATION				AREA		SEEDING CLASS 2A	NITROGEN FERTILIZER NUITRIENT	PHOSPHORUS FERTILIZER NUITRIENT	POTASSIUM FERTILIZER NUITRIENT	HEAVY DUTY EROSION CONTROL BLANKET
STA.	TO	STA.	LT/RT	LENGTH	WIDTH	ACRE	POUND	POUND	POUND	SQ YD
1563+35	TO	1563+50	LT	15	4	0.01	1	1	1	7
1563+50	TO	1564+00	LT	50	4	0.01	1	1	1	23
1564+00	TO	1564+50	LT	50	4	0.01	1	1	1	23
1564+50	TO	1565+00	LT	50	4	0.01	1	1	1	23
1565+00	TO	1565+50	LT	50	4	0.01	1	1	1	23
1565+50	TO	1566+00	LT	50	4	0.01	1	1	1	23
1566+00	TO	1566+50	LT	50	4	0.01	1	1	1	23
1566+50	TO	1567+00	LT	50	4	0.01	1	1	1	23
1567+00	TO	1567+50	LT	50	4	0.01	1	1	1	23
1567+50	TO	1568+00	LT	50	4	0.01	1	1	1	23
1568+00	TO	1568+35	LT	35	4	0.01	1	1	1	16
1568+35	TO	1568+50	LT	15	8	0.01	1	1	1	14
1568+50	TO	1569+00	LT	50	8	0.01	1	1	1	45
1569+00	TO	1569+46	LT	46	8	0.01	1	1	1	41
1569+46	TO	1569+70	LT	24	8	0.01	1	1	1	22
1569+81	TO	1570+00	LT	19	8	0.01	1	1	1	17
SUBTOTAL						**0.16**	**14**	**14**	**14**	**369**
1561+00	TO	1563+35	LT	235	8	0.05	5	5	5	209
1563+35	TO	1563+50	RT	15	4	0.01	1	1	1	7
1563+50	TO	1564+00	RT	50	4	0.01	1	1	1	23
1564+00	TO	1564+50	RT	50	4	0.01	1	1	1	23
1564+50	TO	1565+00	RT	50	4	0.01	1	1	1	23
1565+00	TO	1565+50	RT	50	4	0.01	1	1	1	23
1565+50	TO	1566+00	RT	50	4	0.01	1	1	1	23
1566+00	TO	1566+50	RT	50	4	0.01	1	1	1	23
1566+50	TO	1567+00	RT	50	4	0.01	1	1	1	23
1567+00	TO	1567+50	RT	50	4	0.01	1	1	1	23
1567+50	TO	1568+00	RT	50	4	0.01	1	1	1	23
1568+00	TO	1568+50	RT	50	4	0.01	1	1	1	23
1568+50	TO	1568+56	RT	6	8	0.01	1	1	1	6
1568+56	TO	1570+06	RT	150	8	0.03	3	3	3	134
1570+06	TO	1570+44	RT	38	8	0.01	1	1	1	34
1570+44	TO	1570+60	RT	16	8	0.01	1	1	1	15
1605+30	TO	1607+00	RT	50	18	0.03	3	3	3	100
SUBTOTAL						**0.25**	**23**	**23**	**23**	**735**
TOTAL						**0.41**	**37**	**37**	**37**	**1104**

MODEL: Default
FILE NAME: c:\pw_work\pwidot\woodshank\d1027988\66P89.dgn

USER NAME = ronald.woodshank	DESIGNED - RW	REVISED -	
	DRAWN - RW	REVISED -	
	CHECKED - 7/30/2024	REVISED -	
PLOT DATE = 1/13/2025	DATE -	REVISED -	

STATE OF ILLINOIS
DEPARTMENT OF TRANSPORTATION

SCHEDULES

SCALE: SHEET 3 OF 3 SHEETS STA. TO STA.

F.A.P. RTE.	SECTION	COUNTY	TOTAL SHEETS	SHEET NO.
316	(116)DR,T	BUREAU	25	10
		CONTRACT NO. 66P89		
		ILLINOIS	FED. AID PROJECT	

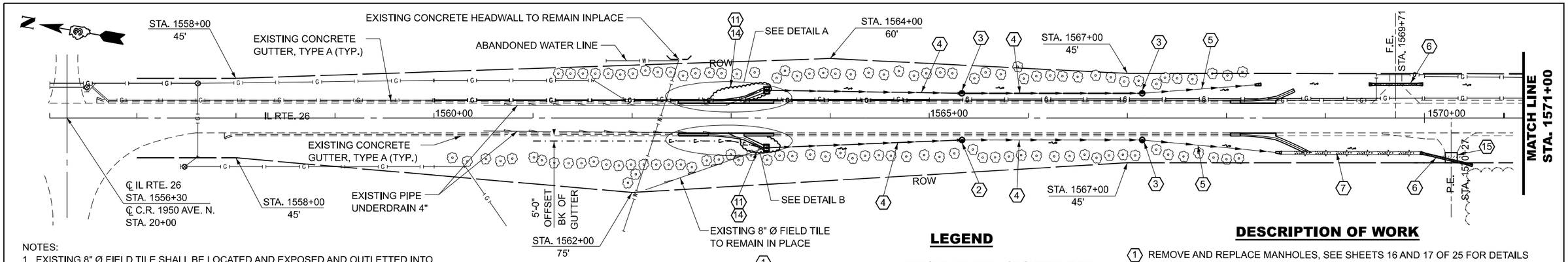

NOTES:

1. EXISTING 8" Ø FIELD TILE SHALL BE LOCATED AND EXPOSED AND OUTLETTED INTO THE PROPOSED MANHOLE, (SPECIAL). PROPOSED PIPE DRAIN 6" (SPECIAL) AND UNDERDRAIN, TYPE 1, 4" SHALL BE OUTLETTED INTO PROPOSED MANHOLE, (SPECIAL). HOLES IN THE MANHOLE WALLS SHALL BE CUT IN FIELD AFTER THE MANHOLE, SPECIAL, HAS BEEN SET IN PLACE.
2. PROPOSED STORM SEWER SHALL BE "HIGH DENSITY POLYETHYLENE PIPE" (HDPE) WITH SMOOTH INTERIOR.
3. NATURAL SPRING (PIPE) OR WATER LINE SHALL BE SEVERED AT THE JUNCTION OF THE EXISTING WATERLINE AND EXPLORATION TRENCH. DOWNSTREAM END SHALL BE PLUGGED. UPSTREAM END SHALL BE INCORPORATED INTO PROPOSED PIPE DRAINS 6" (SPECIAL) AND OUTLETTED INTO EXISTING MANHOLE SPECIAL AT STA.1563+35 RT. CONNECTION BETWEEN THE EXISTING WATER PIPE AND PROPOSED PIPE DRAIN 6" (SPECIAL) SHALL BE APPROVED BY THE ENGINEER PRIOR TO ORDERING OF MATERIALS.
4. COST OF REQUIRED OR UNEXPECTED EXCAVATIONS FOR THE VARIOUS CONSTRUCTION WORK SHALL NOT BE PAID FOR SEPARATELY, BUT SHALL BE INCLUDED IN THE COST OF THE RELATED CONSTRUCTION WORK. EXCAVATED MATERIALS SHALL BE REMOVED AND DISPOSED OF OFF THE RIGHT OF WAY.

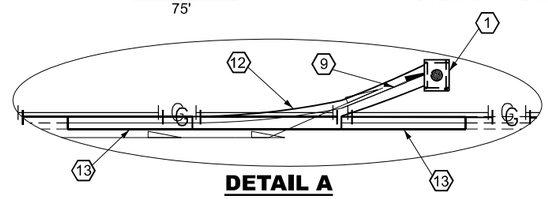

DETAIL A

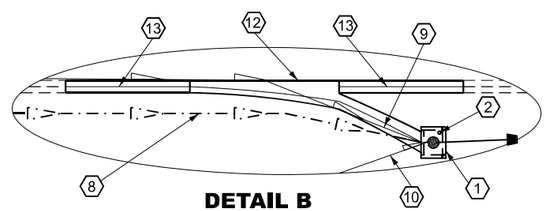

DETAIL B

LEGEND

- REMOVE AND REPLACE GUTTER, TYPE A
- PIPE DRAIN 6" (SPECIAL)
- EXPLORATION TRENCH (SPECIAL)
- STORM SEWER, CLASS B,TYPE 1
- PIPE DRAIN 6" (SPECIAL)
- RECONSTRUCT SLOPE EMBANKMENT
- INLETS, TYPE B, TYPE 1 FRAME & CLOSED LID
- PAVED DITCH
- CLASS SI CONCRETE (OUTLET)
- TREE
- PIPE CULVERT END SECTION
- GRADING AND SHAPING DITCHES
- PIPE CULVERT, CLASS A, TYPE A ERS 18" WITH PRC END SECTION ERS 18"

DESCRIPTION OF WORK

1. REMOVE AND REPLACE MANHOLES, SEE SHEETS 16 AND 17 OF 25 FOR DETAILS
2. RECONSTRUCT EXISTING WATER STAND PIPE
3. INSTALL INLETS, TYPE B, WITH TYPE 5 FRAME AND LID
4. INSTALL STORM SEWER, CLASS B, TYPE 1, 12" WITH PRC FLARED END SECTIONS 12", SEE STANDARD 542301
5. INSTALL STORM SEWER, CLASS B, TYPE 1, 15" WITH PRC FLARED END SECTIONS 15", SEE STANDARD 542301
6. INSTALL PIPE CULVERTS, CLASS A, TYPE 1 18" ERS WITH PRC FLARED END SECTIONS ERS 18", SEE STANDARD 542306
7. CONSTRUCT PAVED DITCHES, TYPE A-15, SEE STANDARD 6096401 FOR DETAILS
8. INSTALL PIPE DRAIN 6" (SPECIAL)
9. INSTALL PIPE UNDERDRAIN, TYPE 1, 4"
10. RECONNECT EXISTING 8" FIELD TILE
11. RECONSTRUCT EXISTING SLOPE EMBANKMENTS, SEE SPECIAL PROVISION
12. REM AND REPL, CONCRETE (OUTLETS), SEE SHEET 14 OF 25 FOR DETAILS
13. REM AND REPL CONCRETE GUTTER, TYPE A, SEE SHEETS 14 OF 25 FOR DETAILS
14. CONSTRUCT STONE RIPRAP CLASS A4 SLOPE
15. CONSTRUCT CLASS "D" PATCH, TYPE II, 9 INCH

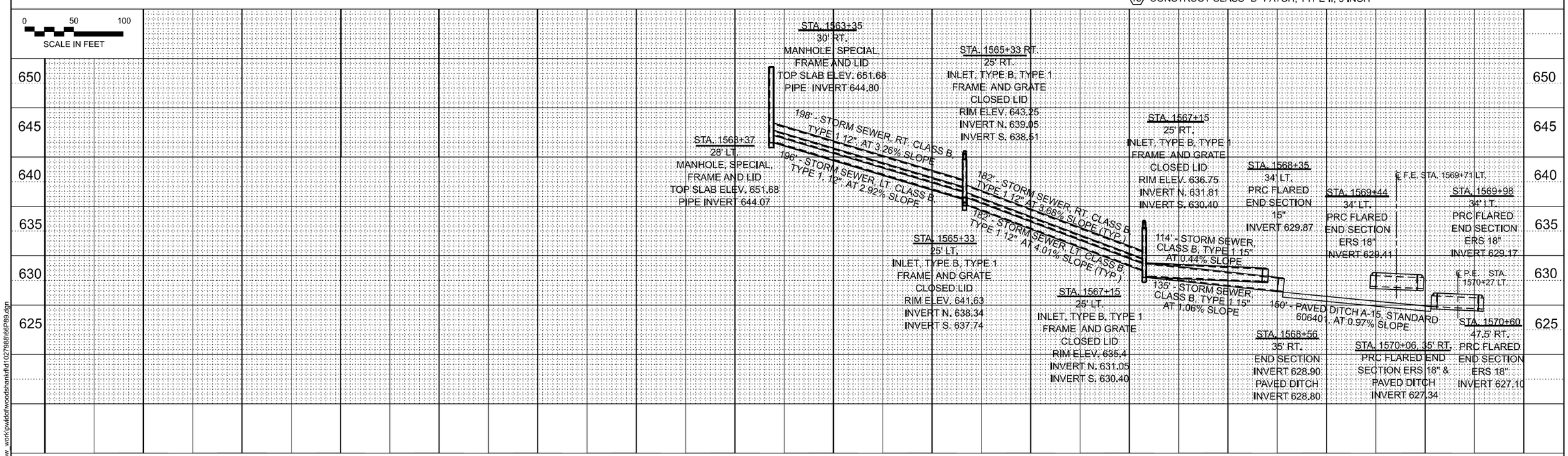

USER NAME = ronald.woodshank	DESIGNED -	REVISED -	
	DRAWN -	REVISED -	
	CHECKED -	REVISED -	
PLOT DATE = 2/13/2025	DATE -	REVISED -	

STATE OF ILLINOIS
DEPARTMENT OF TRANSPORTATION

PLAN AND PROFILE
STA. 1556+30 TO 1570+00

SCALE: SHEET OF SHEETS STA. 1560+00 TO STA. 1570+00

F.A.P. RTE.	SECTION	COUNTY	TOTAL SHEETS	SHEET NO.
316	(116)DR,T	BUREAU	25	11
		CONTRACT NO. 66P89		
		ILLINOIS	FED. AID PROJECT	

PLAN: SURVEYED, PLOTTED, ALIGNMENT CHECKED, RT. OF WAY CHECKED, CADD FILE NAME, NOTE BOOK NO., BY, DATE

PROFILE: SURVEYED, PLOTTED, GRADES CHECKED, B.M. NOTED, STRUCTURE NOTATNS CHKD, NOTE BOOK NO., BY, DATE

MODEL: Default
FILE NAME: c:\pw_work\pwidot\woodshankfd1027988\66P89.dgn

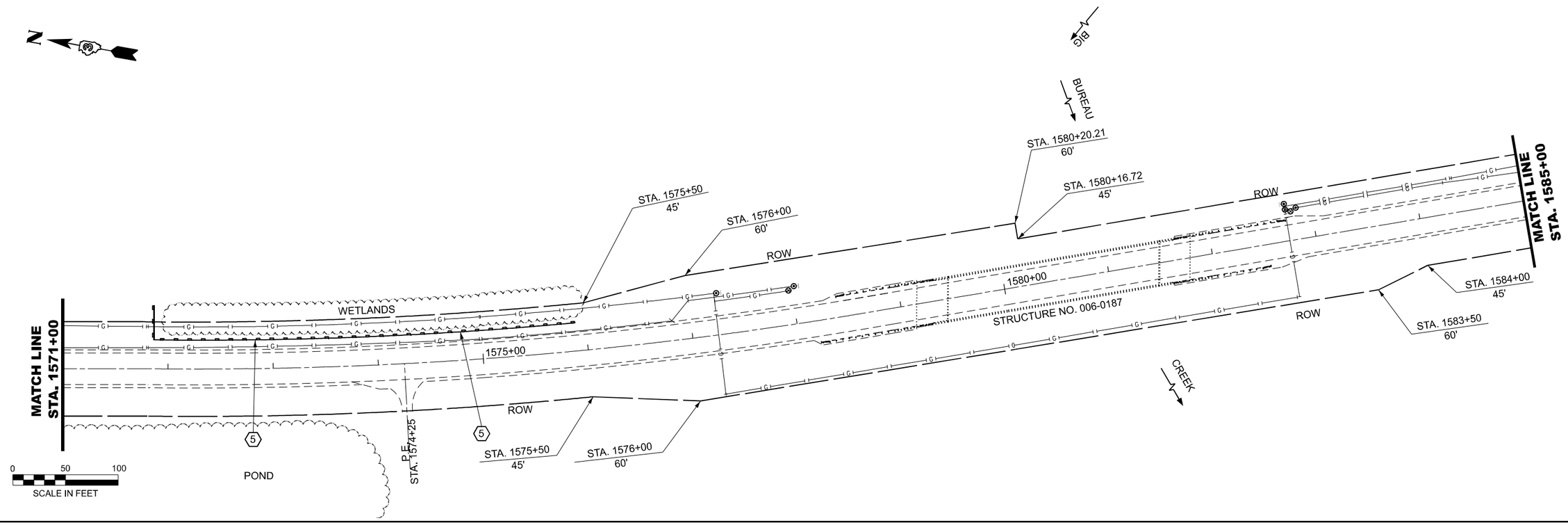

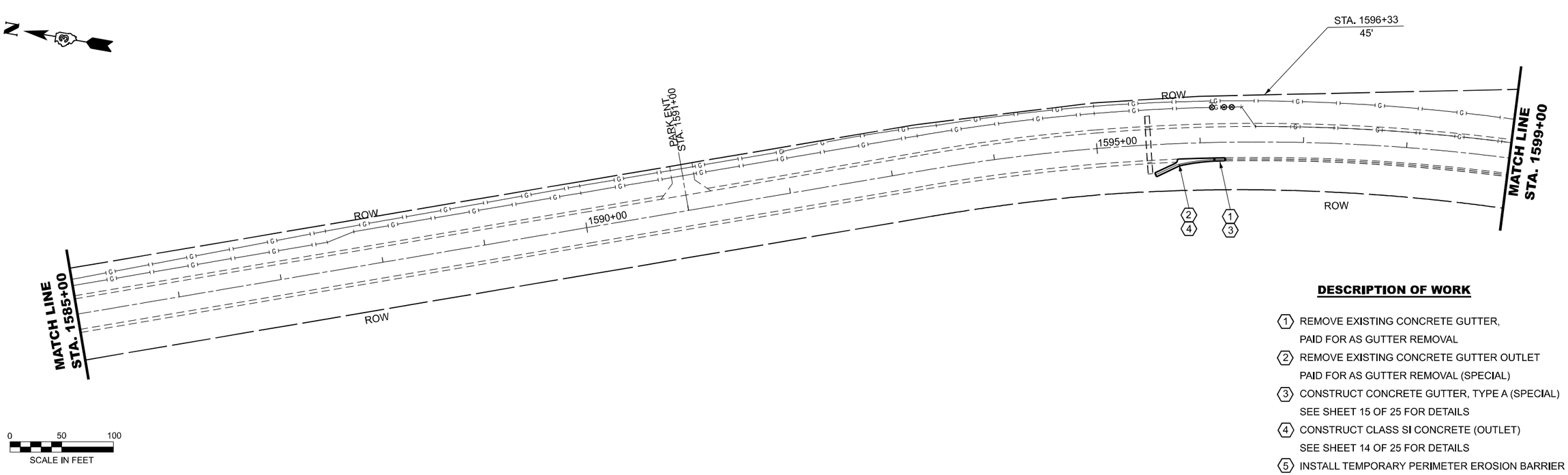

DESCRIPTION OF WORK

1. REMOVE EXISTING CONCRETE GUTTER, PAID FOR AS GUTTER REMOVAL
2. REMOVE EXISTING CONCRETE GUTTER OUTLET PAID FOR AS GUTTER REMOVAL (SPECIAL)
3. CONSTRUCT CONCRETE GUTTER, TYPE A (SPECIAL) SEE SHEET 15 OF 25 FOR DETAILS
4. CONSTRUCT CLASS SI CONCRETE (OUTLET) SEE SHEET 14 OF 25 FOR DETAILS
5. INSTALL TEMPORARY PERIMETER EROSION BARRIER

MODEL: Default
FILE NAME: c:\pw_work\pwidot\woodshankfd1027988\66P89.dgn

USER NAME = ronald.woodshank	DESIGNED - RW	REVISED -	
	DRAWN - RW	REVISED -	
	CHECKED - 7/30/2024	REVISED -	
PLOT DATE = 1/13/2025	DATE -	REVISED -	

STATE OF ILLINOIS
DEPARTMENT OF TRANSPORTATION

PROPOSED PLAN DETAILS
STA. 1570+00 TO STA. 1575+00

SCALE: | SHEET 2 OF 2 SHEETS | STA. 1570+00 TO STA. 1575+00

F.A.P. RTE.	SECTION	COUNTY	TOTAL SHEETS	SHEET NO.
316	(116)DR,T	BUREAU	25	12
		CONTRACT NO. 66P89		
		ILLINOIS	FED. AID PROJECT	

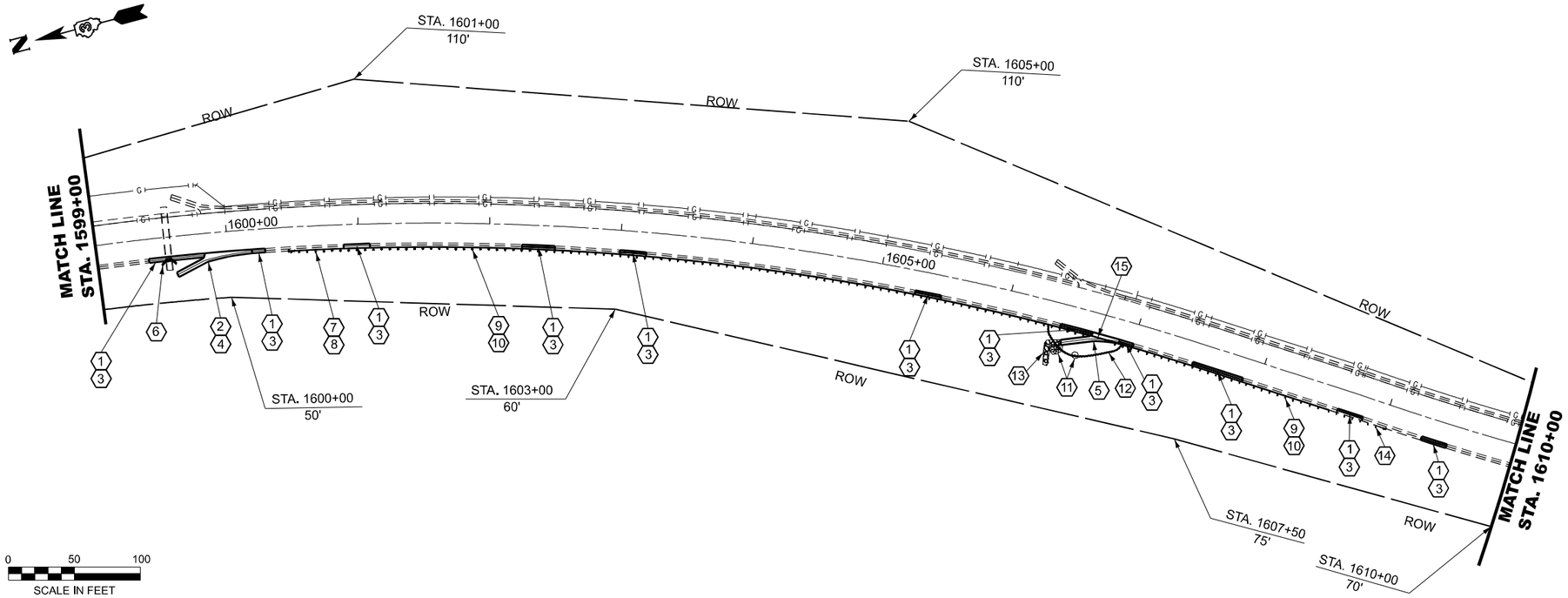

DESCRIPTION OF WORK

1. REMOVE EXISTING CONCRETE GUTTER, PAID FOR AS GUTTER REMOVAL
2. REMOVE EXISTING CONCRETE GUTTER OUTLET PAID FOR AS GUTTER REMOVAL (SPECIAL)
3. CONSTRUCT CONCRETE GUTTER, TYPE A (SPECIAL) SEE SHEET 15 OF 25 FOR DETAILS
4. CONSTRUCT CLASS SI CONCRETE (OUTLET) SEE SHEET 14 OF 25 FOR DETAILS
5. CONSTRUCT CLASS SI CONCRETE (OUTLET), SPECIAL SEE SHEET 15 OF 25 FOR DETAILS
6. HEADWALL REPAIR SEE SHEET 18 OF 25 FOR DETAILS
7. REMOVE EXISTING TRAFFIC BARRIER TERMINAL
8. INSTALL TRAFFIC BARRIER TERMINAL, TYPE 1, (SPECIAL) TANGENT
9. REMOVE EXISTING GUARDRAIL
10. INSTALL STEEL PLATE BEAM GUARDRAIL, TYPE A 6 FOOT POSTS
11. TREE REMOVAL
12. RECONSTRUCT EMBANKMENT FORSLOPE
13. REMOVE AND REPLACE RIPRAP CLASS A4
14. REMOVE AND RE-ERECT TRAFFIC BARRIER TERMINAL TYPE 1, SPECIAL, TANGENT
15. LONG-SPAN OVER CULVERT, 25 FT SPAN

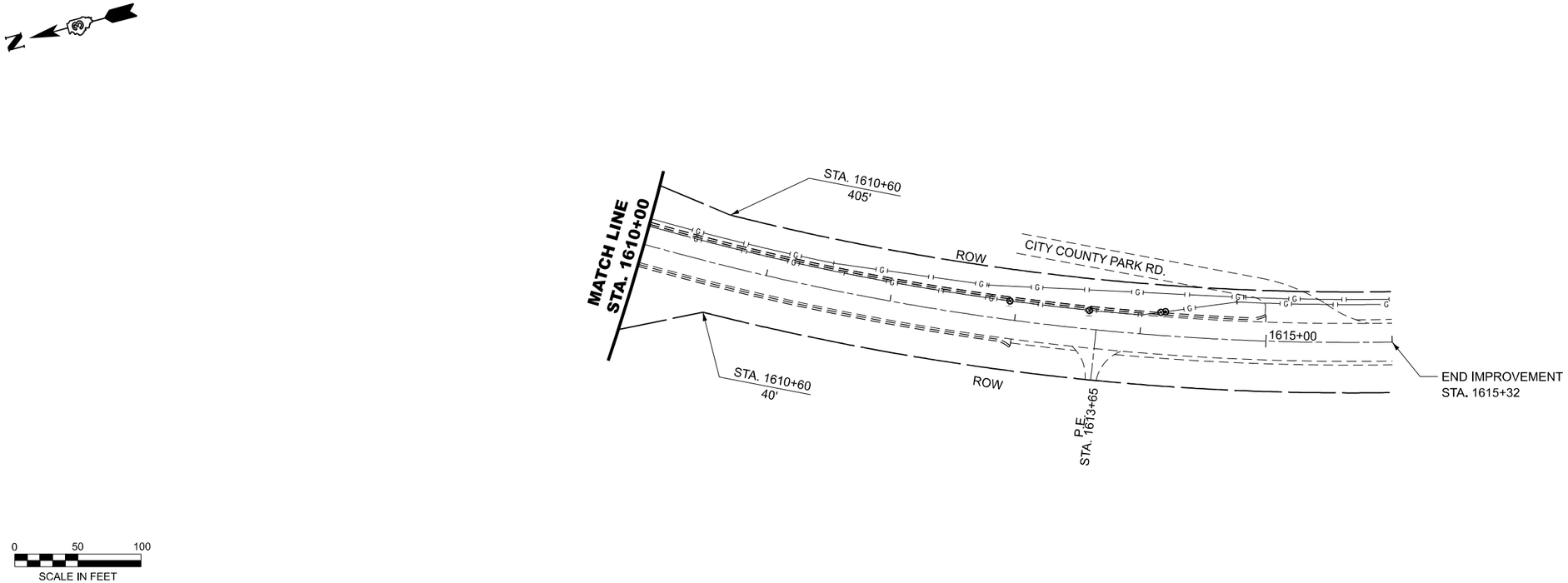

MODEL: Default
FILE NAME: c:\pw_work\pwidot\woodshankfld\d1027988\66P89.dgn

USER NAME = ronald.woodshank	DESIGNED - RW	REVISED -	STATE OF ILLINOIS DEPARTMENT OF TRANSPORTATION
	DRAWN - RW	REVISED -	
	CHECKED - 7/30/2024	REVISED -	
PLOT DATE = 1/13/2025	DATE -	REVISED -	

PROPOSED PLAN DETAILS
STA. 1575+00 TO STA. 1580+00

SCALE: | SHEET 1 OF 1 SHEETS | STA. 1575+00 TO STA. 1580+00

F.A.P. RTE.	SECTION	COUNTY	TOTAL SHEETS	SHEET NO.
316	(116)DR,T	BUREAU	25	13
		CONTRACT NO. 66P89		
	ILLINOIS	FED. AID PROJECT		

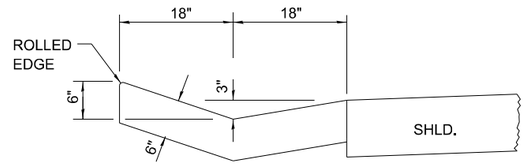

SECTION A-A

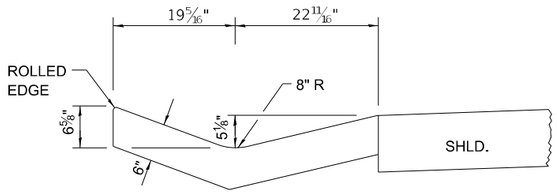

SECTION B-B

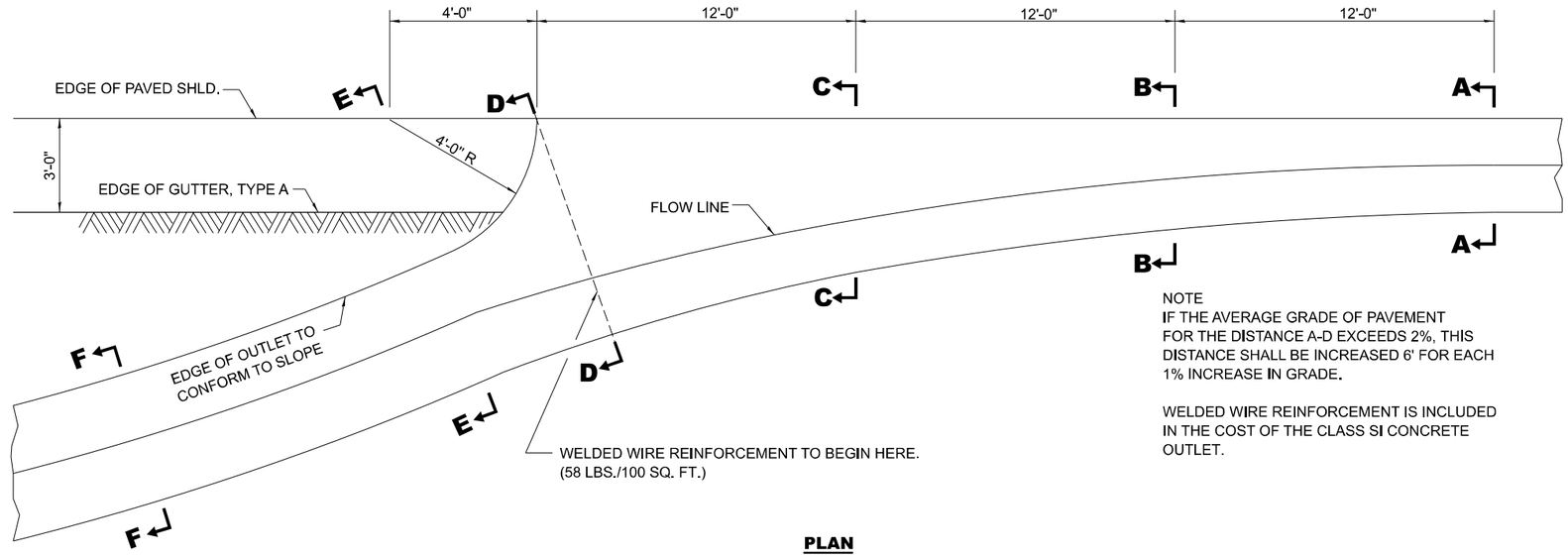

NOTE
IF THE AVERAGE GRADE OF PAVEMENT FOR THE DISTANCE A-D EXCEEDS 2%, THIS DISTANCE SHALL BE INCREASED 6' FOR EACH 1% INCREASE IN GRADE.

WELDED WIRE REINFORCEMENT IS INCLUDED IN THE COST OF THE CLASS SI CONCRETE OUTLET.

PLAN

OUTLET

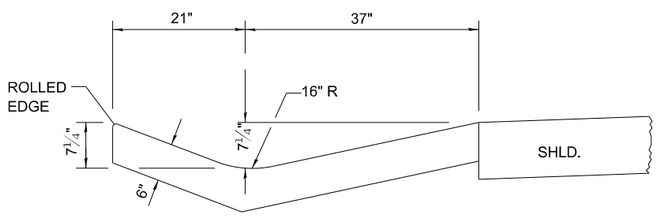

SECTION C-C

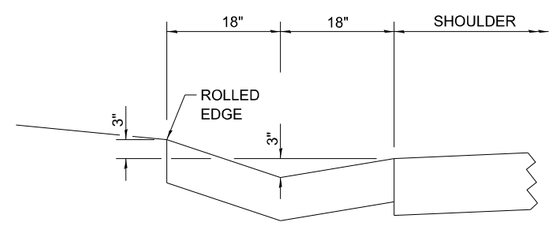

TYPE A GUTTER

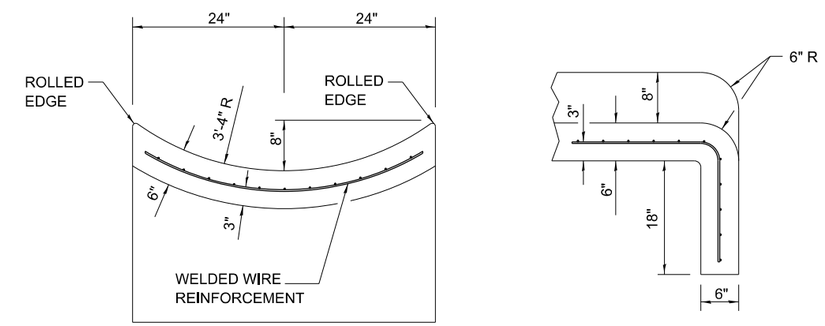

SECTIONS AT END OF OUTLET

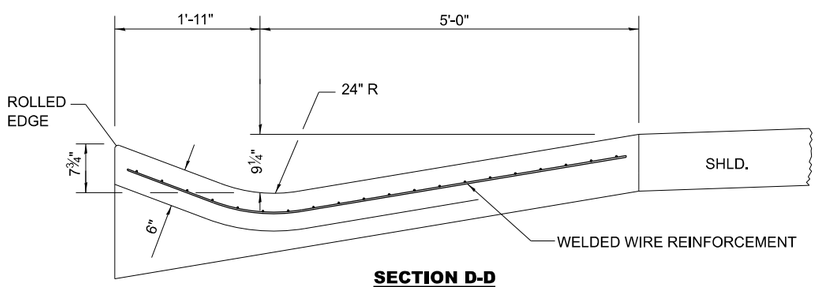

SECTION D-D

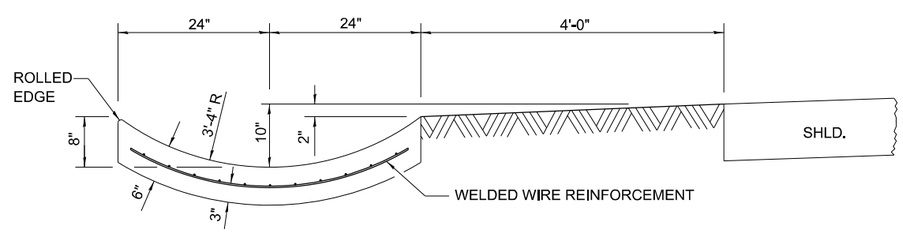

SECTION E-E

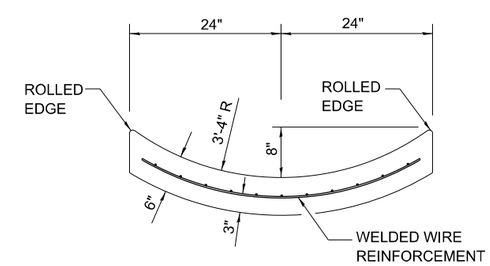

SECTION F-F

MODEL: Default
FILE NAME: c:\pw_work\pwidot\woodshankfd1027988\66P89.dgn

USER NAME = ronald.woodshank	DESIGNED - RW	REVISED -	STATE OF ILLINOIS DEPARTMENT OF TRANSPORTATION
	DRAWN - RW	REVISED -	
	CHECKED - 7/30/2024	REVISED -	
PLOT DATE = 1/13/2025	DATE -	REVISED -	

CONCRETE GUTTER TYPE A (OUTLET) STANDARD

SCALE: | SHEET 2 OF 3 SHEETS | STA. | TO STA.

F.A.P. RTE.	SECTION	COUNTY	TOTAL SHEETS	SHEET NO.
316	(116)DR,T	BUREAU	25	14
		CONTRACT NO. 66P89		
		ILLINOIS	FED. AID PROJECT	

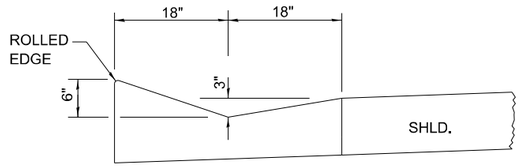

SECTION A-A

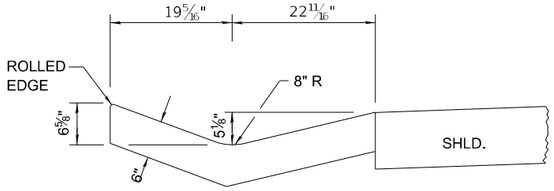

SECTION B-B

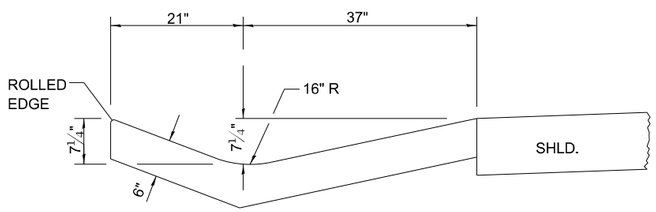

SECTION C-C

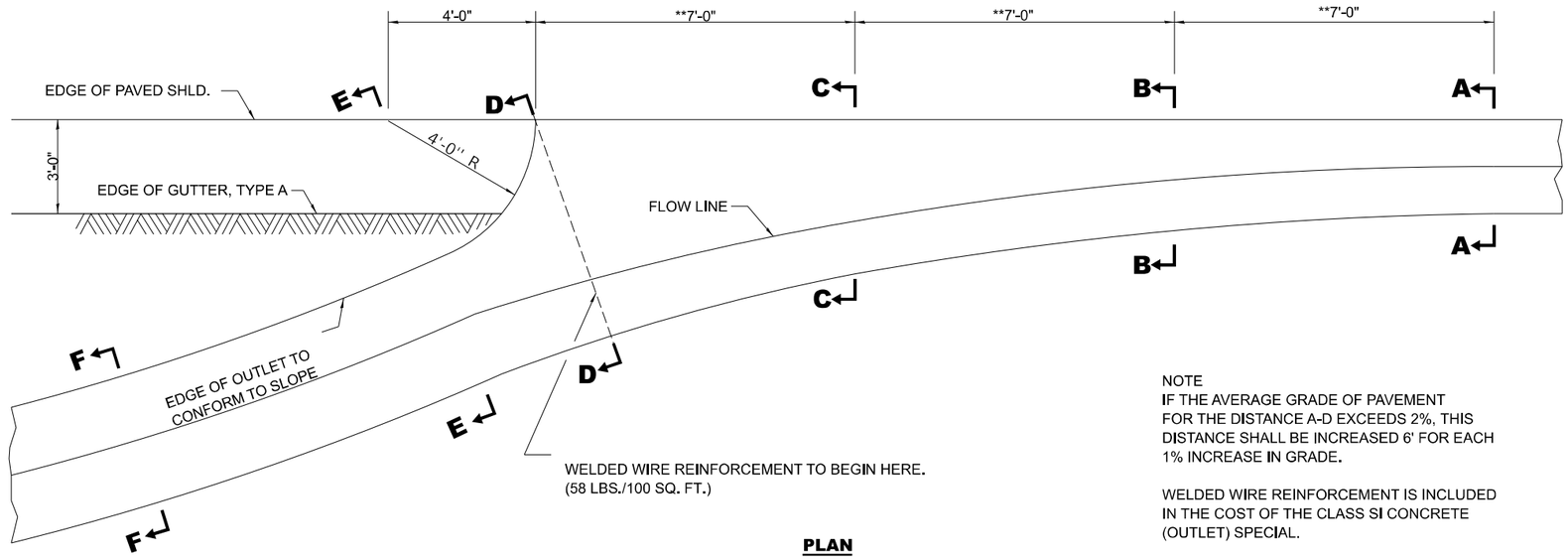

PLAN

OUTLET

NOTE
IF THE AVERAGE GRADE OF PAVEMENT FOR THE DISTANCE A-D EXCEEDS 2%, THIS DISTANCE SHALL BE INCREASED 6' FOR EACH 1% INCREASE IN GRADE.

WELDED WIRE REINFORCEMENT IS INCLUDED IN THE COST OF THE CLASS SI CONCRETE (OUTLET) SPECIAL.

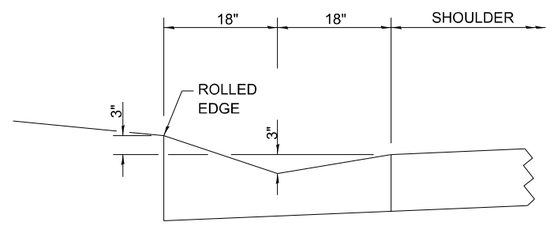

TYPE A GUTTER (SPECIAL)

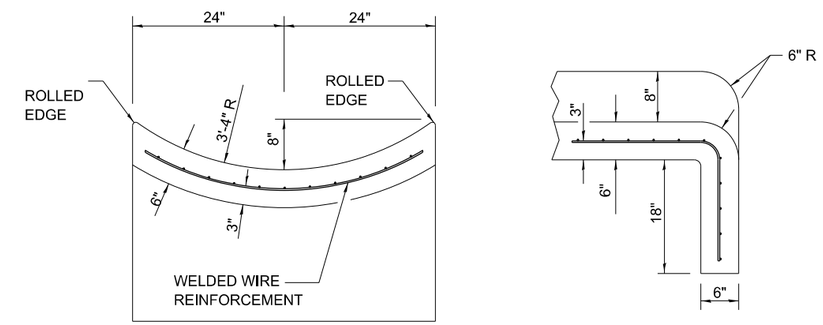

SECTIONS AT END OF OUTLET

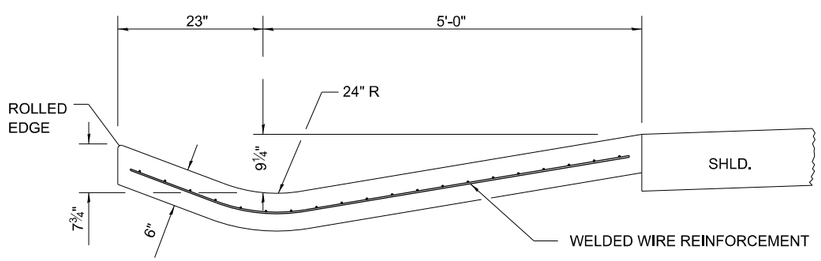

SECTION D-D

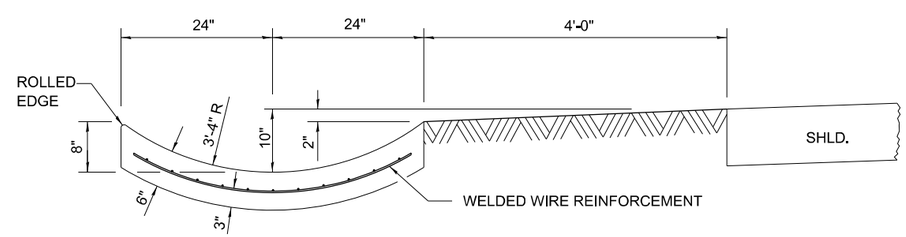

SECTION E-E

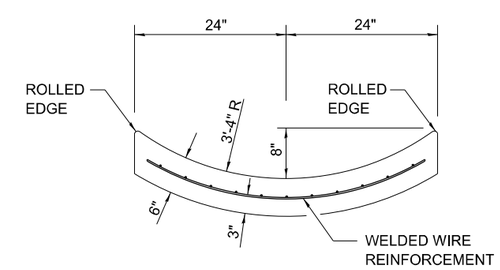

SECTION F-F

MODEL: Default
FILE NAME: c:\pw_work\pwidot\woodshankfd1027988\66P89.dgn

USER NAME = ronald.woodshank	DESIGNED - RW	REVISED -	STATE OF ILLINOIS DEPARTMENT OF TRANSPORTATION
	DRAWN - RW	REVISED -	
	CHECKED - 7/30/2024	REVISED -	
PLOT DATE = 1/13/2025	DATE -	REVISED -	

CONCRETE GUTTER, TYPE A (OUTLET) SPECIAL

SCALE: | SHEET 3 OF 3 SHEETS | STA. | TO STA.

F.A.P. RTE.	SECTION	COUNTY	TOTAL SHEETS	SHEET NO.
316	(116)DR,T	BUREAU	25	15
		CONTRACT NO. 66P89		
		ILLINOIS	FED. AID PROJECT	

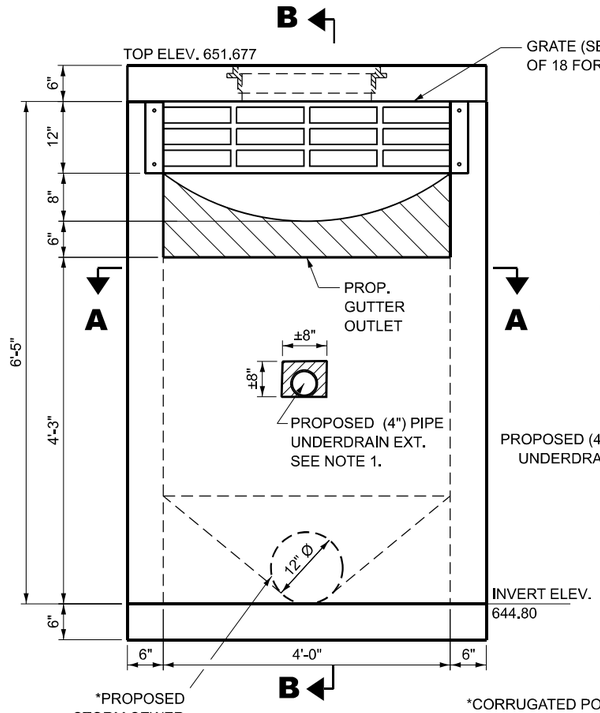

ELEVATION

LOOKING SOUTH

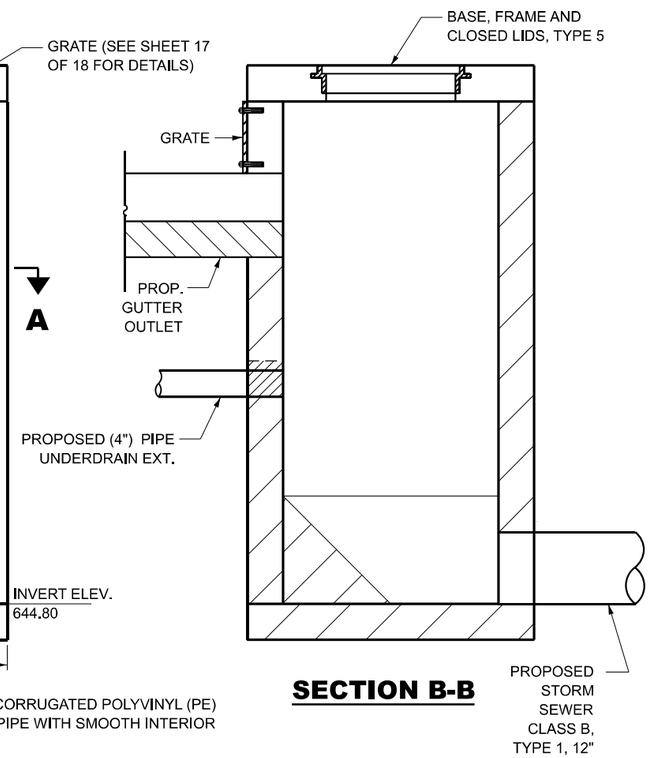

SECTION B-B

NOTE:
EXISTING 8" Ø FIELD TILE, PROPOSED PIPE DRAIN 6" (SPECIAL) AND PROPOSED PIPE UNDERDRAIN, TYPE 1 4" SHALL BE OUTLET INTO PROPOSED MANHOLE, SPECIAL. HOLES IN MANHOLE (SPECIAL) SHALL BE CUT IN FIELD AFTER THE MANHOLE HAS BEEN SET IN PLACE.

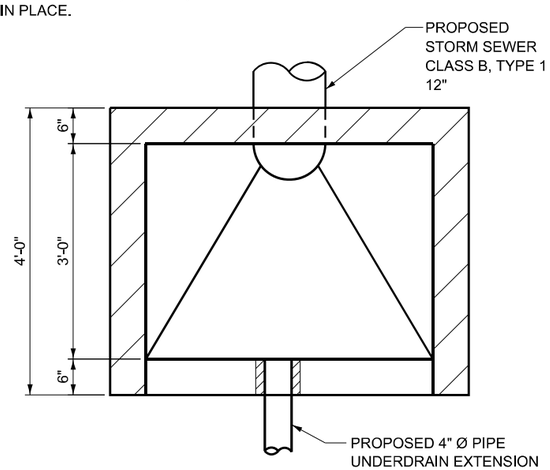

SECTION A-A

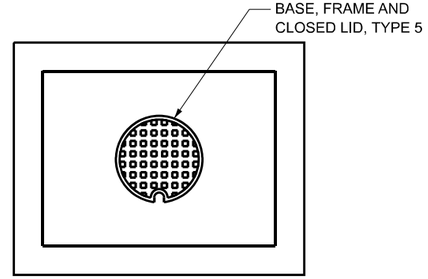

TOP SLAB

GENERAL NOTES

THE MANHOLE (SPECIAL) SHALL BE PRECAST AND ALL MATERIALS NECESSARY TO CONSTUCT THE MANHOLE (SPECIAL) INCLUDING CONCRETE, REINFORCEMENT BARS, FRAME/LID AND GRATE SHALL BE CONSIDERED INCLUDED IN THE COST OF THE PAY ITEM. "MANHOLE, SPECIAL, FRAME AND LID". MATERIALS SHALL BE ACCORDING TO APPLICABLE PORTIONS OF SECTION 508 AND 602 OF THE STANDARD SPECIFICATIONS.

PROVISIONS SHALL BE MADE TO PROVIDE OPENINGS IN THE WALLS OF THE MANHOLE TO OUTLET THE CONCRETE GUTTER, TYPE A AND THE STORM SEWER 12" Ø.

BASE, FRAME AND CLOSED LID SHALL BE ACCORDING TO STANDARD 604021.

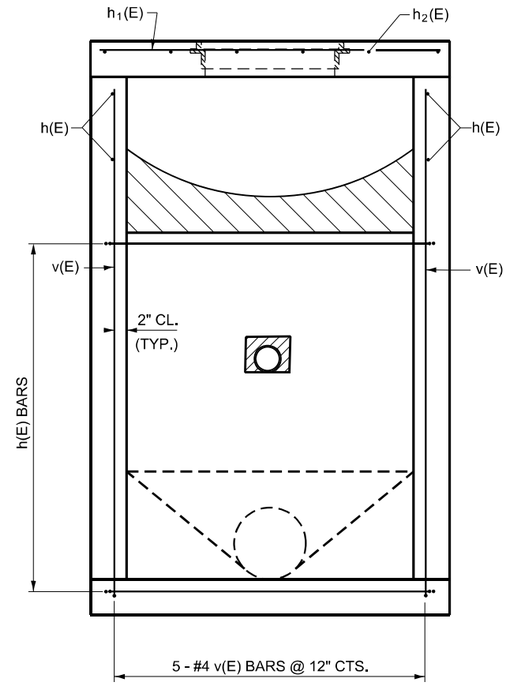

ELEVATION

LOOKING SOUTH

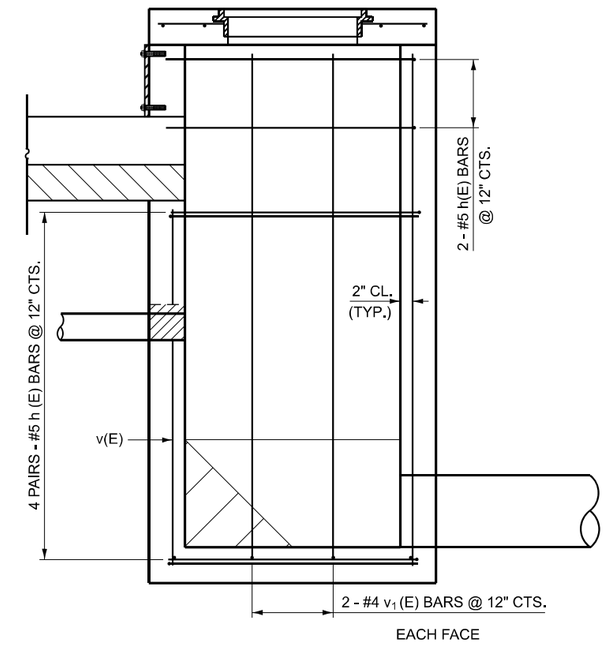

SECTION B-B

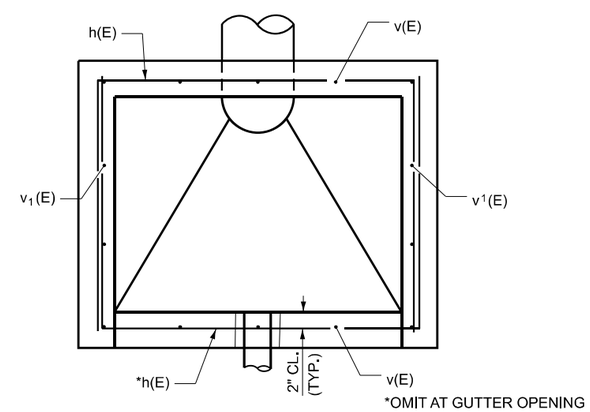

SECTION A-A

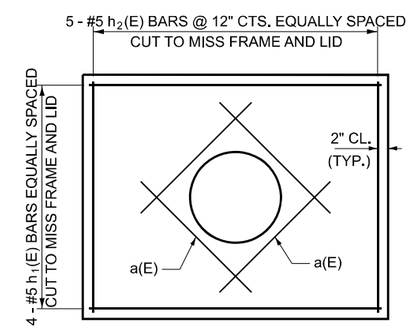

TOP SLAB

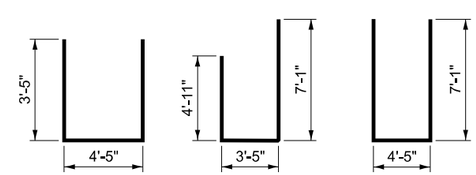

h(E) **v(E)** **v1(E)**

BILL OF MATERIAL

BAR	NO.	SIZE	LENGTH	SHAPE
a(E)	4	#5	2'-8"	
h(E)	10	#5	11'-3"	
h1(E)	4	#5	3'-9"	
h2(E)	5	#5	4'-9"	
v(E)	5	#4	15'-5"	
v1(E)	2	#4	18'-7"	
REINFORCEMENT BARS, EPOXY COATED			LBS.	245
CONCRETE SUPERSTRUCTURE			CU. YDS.	3.5

MODEL: Default
FILE NAME: c:\pw_work\pwidot\woodshankrfd10279881\66P89.dgn

USER NAME = ronald.woodshank	DESIGNED - RW	REVISED -	
	DRAWN - RW	REVISED -	
	CHECKED - 7/30/2024	REVISED -	
PLOT DATE = 1/13/2025	DATE -	REVISED -	

STATE OF ILLINOIS
DEPARTMENT OF TRANSPORTATION

PROPOSED MANHOLE (SPECIAL)
STA. 1563+37 LT.

SCALE: SHEET 1 OF 1 SHEETS STA. TO STA.

F.A.P. RTE.	SECTION	COUNTY	TOTAL SHEETS	SHEET NO.
316	(116)DR,T	BUREAU	25	16
		CONTRACT NO. 66P89		
		ILLINOIS	FED. AID PROJECT	

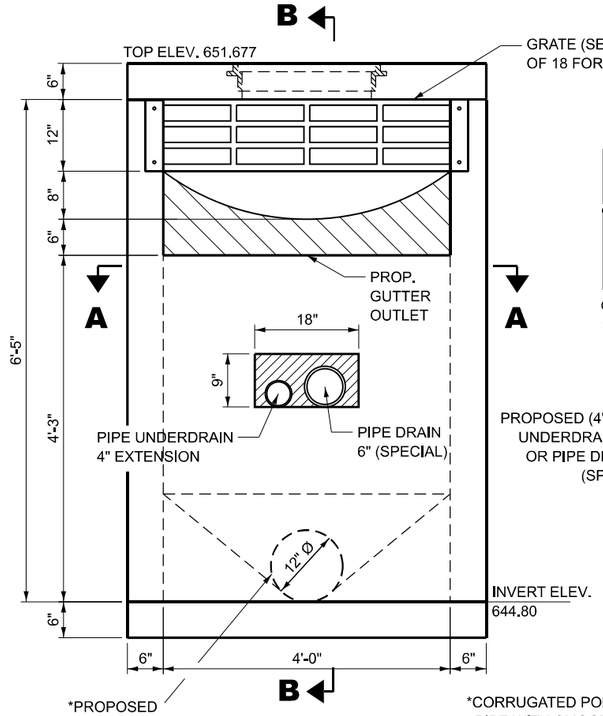

ELEVATION

LOOKING SOUTH

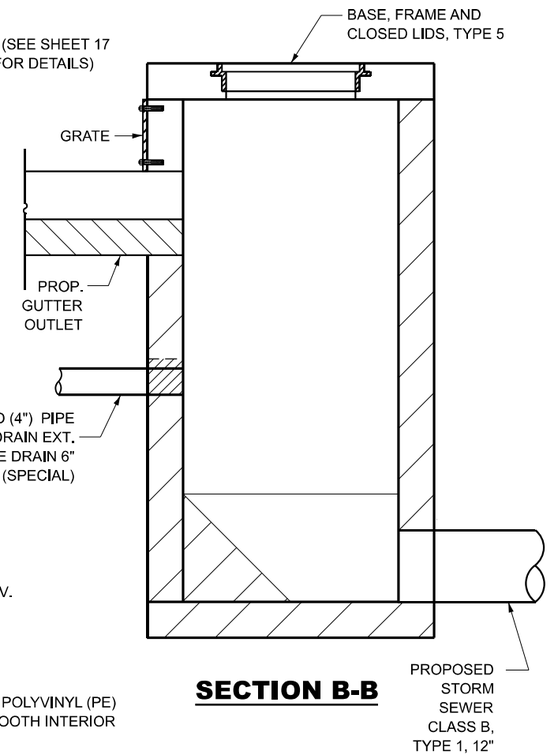

SECTION B-B

NOTE:
EXISTING 8" Ø FIELD TILE, PROPOSED PIPE DRAIN 6" (SPECIAL) AND PROPOSED PIPE UNDERDRAIN, TYPE 1 4" SHALL BE OUTLET INTO PROPOSED MANHOLE, SPECIAL. HOLES IN MANHOLE (SPECIAL) SHALL BE CUT IN FIELD AFTER THE MANHOLE HAS BEEN SET IN PLACE.

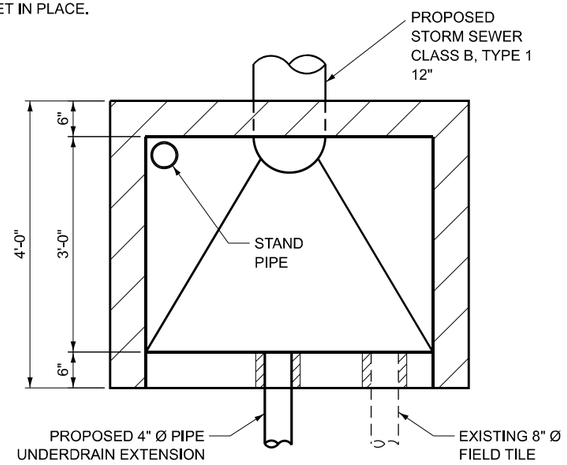

SECTION A-A

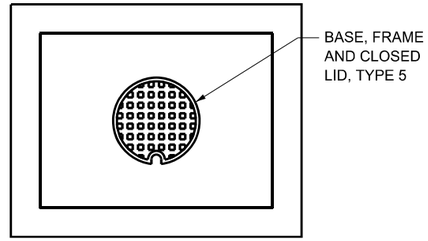

TOP SLAB

GENERAL NOTES

THE MANHOLE (SPECIAL) SHALL BE PRECAST AND ALL MATERIALS NECESSARY TO CONSTRUCT THE MANHOLE (SPECIAL) INCLUDING CONCRETE, REINFORCEMENT BARS FRAME/LID AND GRATE SHALL BE CONSIDERED INCLUDED IN THE COST OF THE PAY ITEM. "MANHOLE, SPECIAL, FRAME AND LID". MATERIALS SHALL BE ACCORDING TO APPLICABLE PORTIONS OF SECTION 508 AND 602 OF THE STANDARD SPECIFICATIONS.

PROVISIONS SHALL BE MADE TO PROVIDE OPENINGS IN THE WALLS OF THE MANHOLE TO OUTLET THE PIPE UNDERDRAIN, CONCRETE GUTTER, TYPE A AND THE STORM SEWER 12" Ø.

BASE, FRAME AND CLOSED LID SHALL BE ACCORDING TO STANDARD 604021.

THE EXISTING VERTICLE STAND PIPE SHALL BE EXPOSED, +/- 5 FEET OF THE PIPE REMOVED AND REPLACED, THE VERTICLE STAND PIPE SHALL BE INCORPORATED INTO THE NEW MANHOLE IBN THE SOUTH EAST CORNER OF THE MANHOLE. COST INCLUDED IN THE MANHOLE (SPECIAL) ITEM.

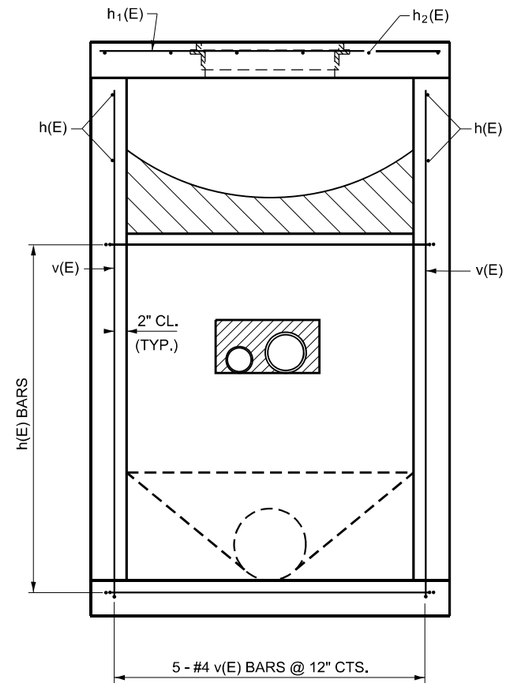

ELEVATION

LOOKING SOUTH

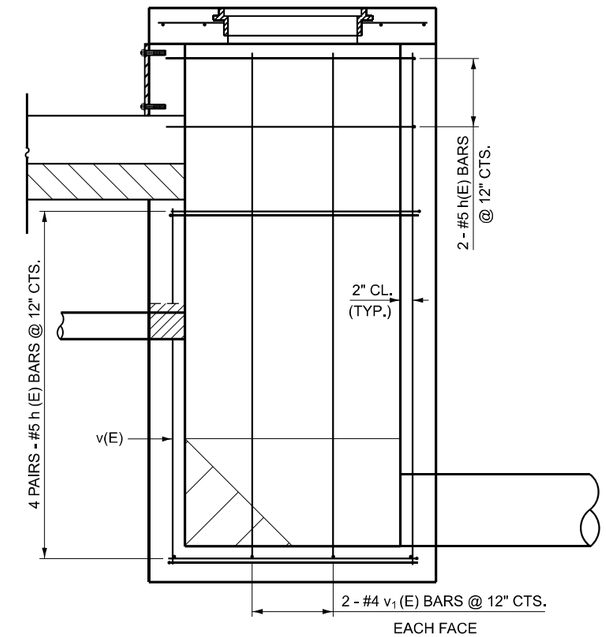

SECTION B-B

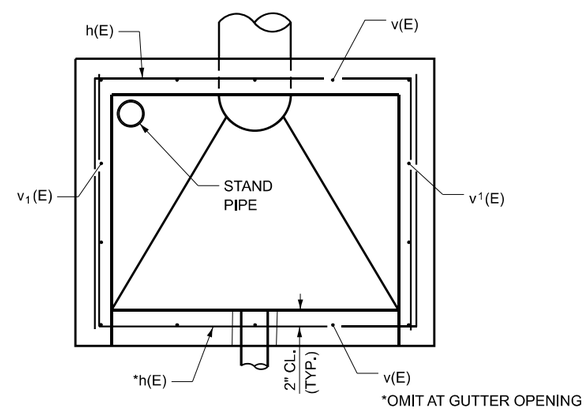

SECTION A-A

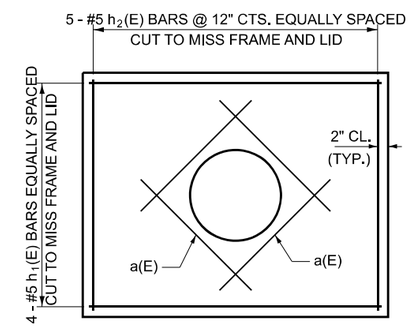

TOP SLAB

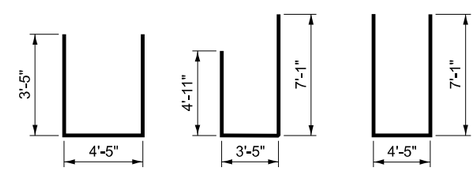

h(E) **v(E)** **v1(E)**

BILL OF MATERIAL

BAR	NO.	SIZE	LENGTH	SHAPE
a(E)	4	#5	2'-8"	
h(E)	10	#5	11'-3"	
h1(E)	4	#5	3'-9"	
h2(E)	5	#5	4'-9"	
v(E)	5	#4	15'-5"	
v1(E)	2	#4	18'-7"	
REINFORCEMENT BARS, EPOXY COATED			LBS.	245
CONCRETE SUPERSTRUCTURE			CU. YDS.	3.5

MODEL: Default
FILE NAME: c:\pw_work\pwidot\woodshank\d1027988\66P89.dgn

USER NAME = ronald.woodshank	DESIGNED - RW	REVISED -	
	DRAWN - RW	REVISED -	
	CHECKED - 7/30/2024	REVISED -	
PLOT DATE = 1/13/2025	DATE -	REVISED -	

STATE OF ILLINOIS
DEPARTMENT OF TRANSPORTATION

PROPOSED MANHOLE (SPECIAL)
STA. 1563+35 RT.

SCALE: SHEET 1 OF 1 SHEETS STA. TO STA.

F.A.P. RTE.	SECTION	COUNTY	TOTAL SHEETS	SHEET NO.
316	(116)DR,T	BUREAU	25	17
		CONTRACT NO. 66P89		
		ILLINOIS	FED. AID PROJECT	

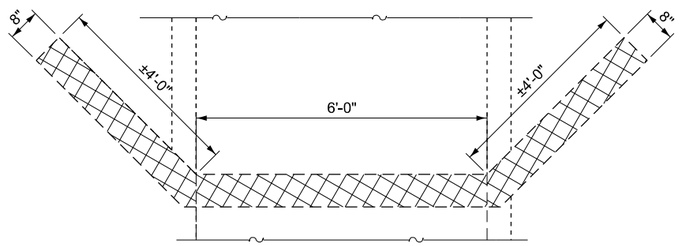

PLAN

EXISTING

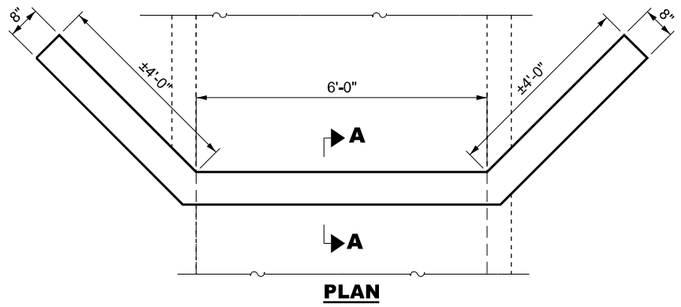

PLAN

PROPOSED

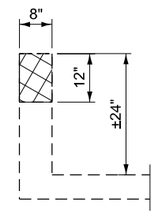

SECTION A-A

NOTE:
EXISTING REINFORCEMENT BARS SHALL BE CLEANED AND INCORPORATED INTO THE NEW CONSTRUCTION

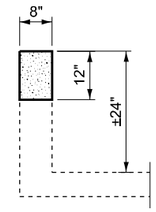

SECTION A-A

HEADWALL REPAIR

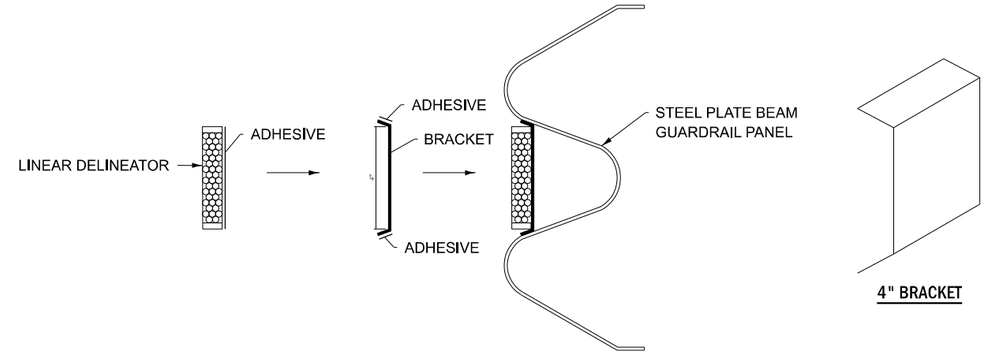

LINEATOR DELINEATOR APPLICATION TO STANDARD GALVANIZED GUARDRAIL

LINEATOR DELINEATOR SHALL BE APLLIED ACCORDING TO THE MANUFACTURER'S RECOMENDATIONS

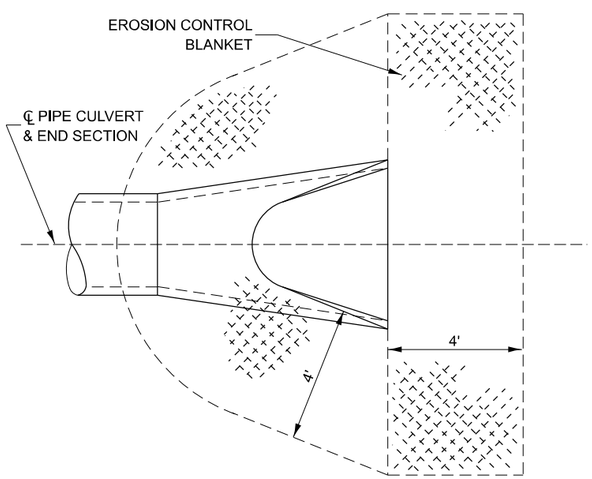

EROSION CONTROL BLANKET AT END SECTIONS

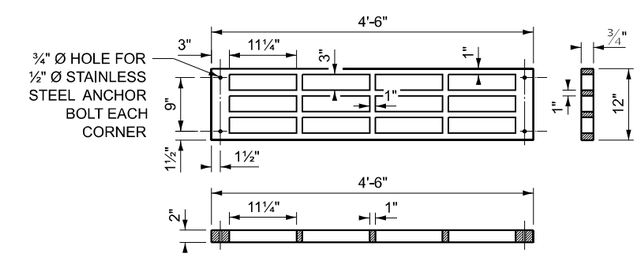

GRATE

CAST GRATE

MODEL: Default
FILE NAME: c:\pw_work\pwidot\woodshankrfd1027988\66P89.dgn

USER NAME = ronald.woodshank	DESIGNED - RW	REVISED -	
	DRAWN - RW	REVISED -	
	CHECKED - 7/30/2024	REVISED -	
PLOT DATE = 11/1/2024	DATE -	REVISED -	

STATE OF ILLINOIS
DEPARTMENT OF TRANSPORTATION

MISCELLANEOUS DETAILS

SCALE: | SHEET 1 OF 1 SHEETS | STA. | TO STA.

F.A.P. RTE.	SECTION	COUNTY	TOTAL SHEETS	SHEET NO.
316	(116)DR,T	BUREAU	25	18
		CONTRACT NO. 66P89		
		ILLINOIS	FED. AID PROJECT	

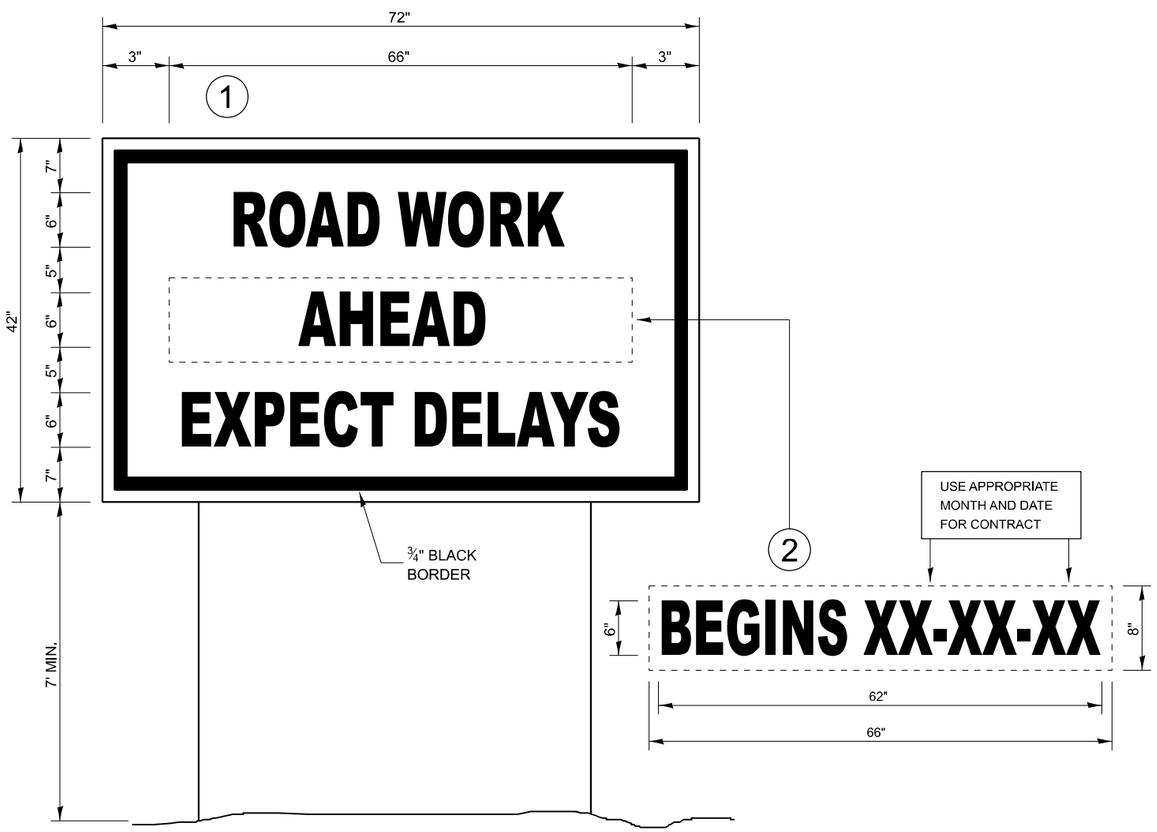

TEMPORARY INFORMATION SIGNING

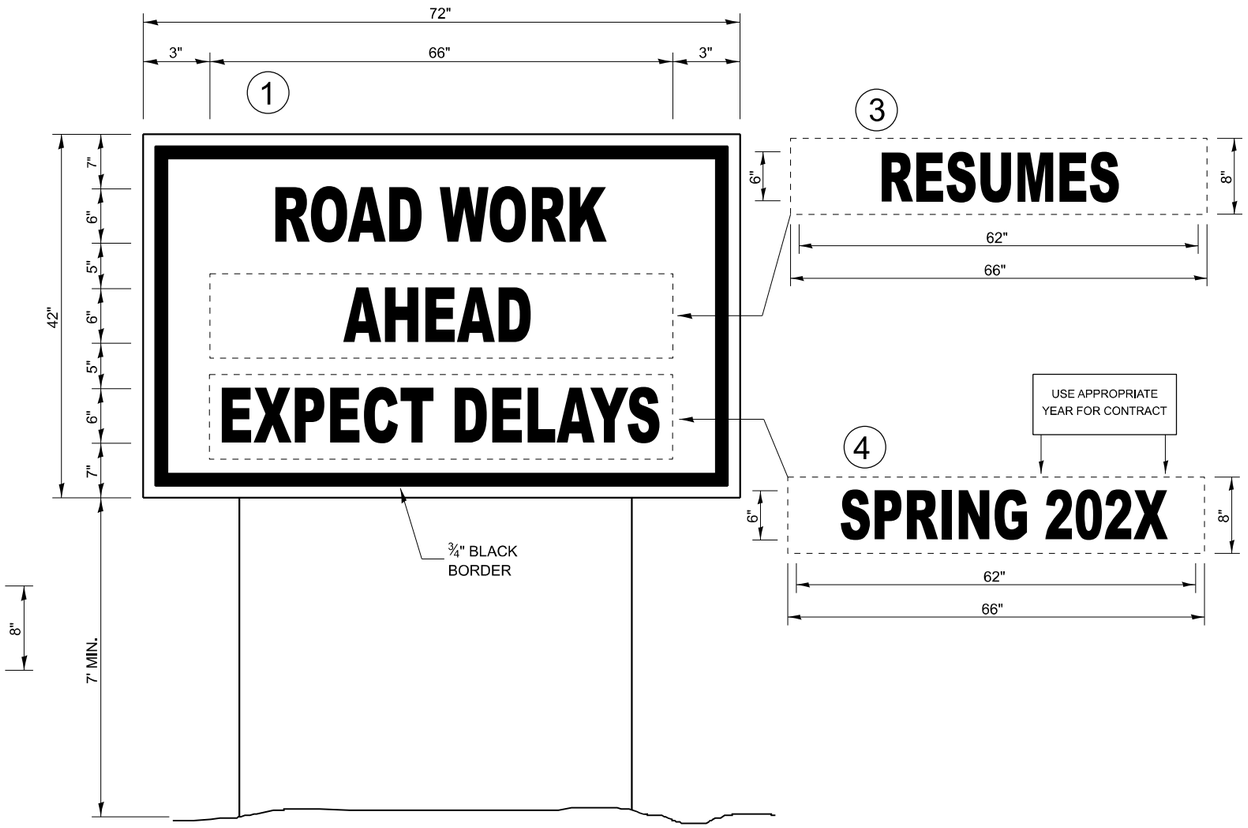

WINTER SHUT DOWN SIGNING

NOTES:

1. USE 6" D BLACK LETTERING ON FLOURESENT ORANGE BACKGROUND.
2. ERECT SIGNS AT LOCATIONS IN ADVANCE OF THE "ROAD CONSTRUCTION AHEAD" SIGNS AS DIRECTED BY THE ENGINEER.
3. ERECT SIGN ① WITH INSTALLED PANEL ② A MINIMUM OF ONE WEEK PRIOR TO THE START OF THE LANE CLOSURE.
4. REMOVE PANEL ② ON THAT DATE.
5. SEE SPECIAL PROVISION "TEMPORARY INFORMATION SIGNING" FOR ADDITIONAL INFORMATION.
6. WILL BE PAID FOR PER SQ FT AS "TEMPORARY INFORMATION SIGNING". EACH SIGN = 21 SQ FT.

MODEL: Default
FILE NAME: c:\pw_work\pwidot\woodshankrf\d1027988\66P89.dgn

USER NAME = ronald.woodshank	DESIGNED - RW	REVISED -	STATE OF ILLINOIS DEPARTMENT OF TRANSPORTATION
	DRAWN - RW	REVISED -	
	CHECKED - 7/30/2024	REVISED -	
PLOT DATE = 11/1/2024	DATE -	REVISED -	

TEMPORARY INFORMATION SIGNING

SCALE: | SHEET 1 OF 1 SHEETS | STA. TO STA.

F.A.P. RTE.	SECTION	COUNTY	TOTAL SHEETS	SHEET NO.
316	(116)DR,T	BUREAU	25	19
		CONTRACT NO. 66P89		
		ILLINOIS	FED. AID PROJECT	

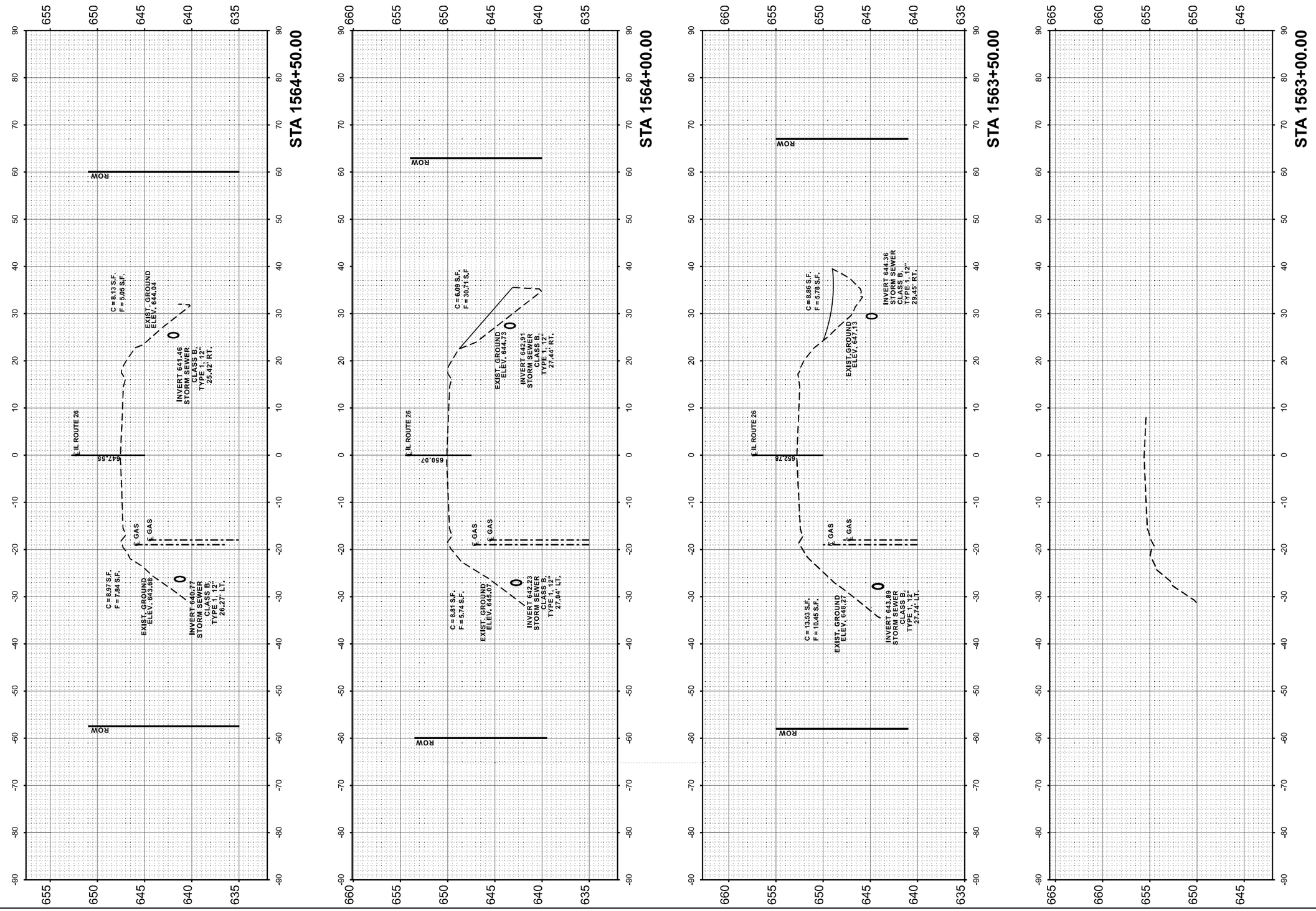

FINAL SURVEY		BY	DATE
NOTE BOOK	SURVEYED		
	PLOTTED		
	TEMPLATE		
	AREAS		
NO.	AREAS CHECKED		

ORIGINAL SURVEY		BY	DATE
NOTE BOOK	SURVEYED		
	PLOTTED		
	TEMPLATE		
	AREAS		
NO.	AREAS CHECKED		

MODEL: EXRTE26N - 1563+00.00 [Sheet]
FILE NAME: c:\pw_work\pwidot\woodshank\d1027988\66P89.dgn

USER NAME = ronald.woodshank	DESIGNED - RW	REVISED -	
	DRAWN - RW	REVISED -	
	CHECKED - JS	REVISED -	
PLOT DATE = 11/1/2024	DATE - 11/22/2024	REVISED -	

STATE OF ILLINOIS
DEPARTMENT OF TRANSPORTATION

CROSS SECTIONS

SCALE: 1"=10' | SHEET 1 OF 6 SHEETS | STA. | TO STA.

F.A.P. RTE.	SECTION	COUNTY	TOTAL SHEETS	SHEET NO.
316	(116)DR.T	BUREAU	25	20
		CONTRACT NO. 66P89		
		ILLINOIS	FED. AID PROJECT	

FINAL SURVEY		BY	DATE
NOTE BOOK	SURVEYED		
	PLOTTED		
	TEMPLATE		
	AREAS		
NO.	AREAS CHECKED		

ORIGINAL SURVEY		BY	DATE
NOTE BOOK	SURVEYED		
	PLOTTED		
	TEMPLATE		
	AREAS		
NO.	AREAS CHECKED		

MODEL: EXRTE26N - 1565+00.00 [Sheet]
FILE NAME: c:\pw_work\pwidot\woodshank\d1027988\66P89.dgn

USER NAME = ronald.woodshank	DESIGNED - RW	REVISED -	
	DRAWN - RW	REVISED -	
	CHECKED - JS	REVISED -	
PLOT DATE = 11/1/2024	DATE - 10/22/2024	REVISED -	

STATE OF ILLINOIS
DEPARTMENT OF TRANSPORTATION

CROSS SECTIONS

SCALE: 1"=10' | SHEET 1 OF 6 SHEETS | STA. | TO STA.

F.A.P. RTE.	SECTION	COUNTY	TOTAL SHEETS	SHEET NO.
316	(116)DR,T	BUREAU	25	21
		CONTRACT NO. 66P89		
		ILLINOIS	FED. AID PROJECT	

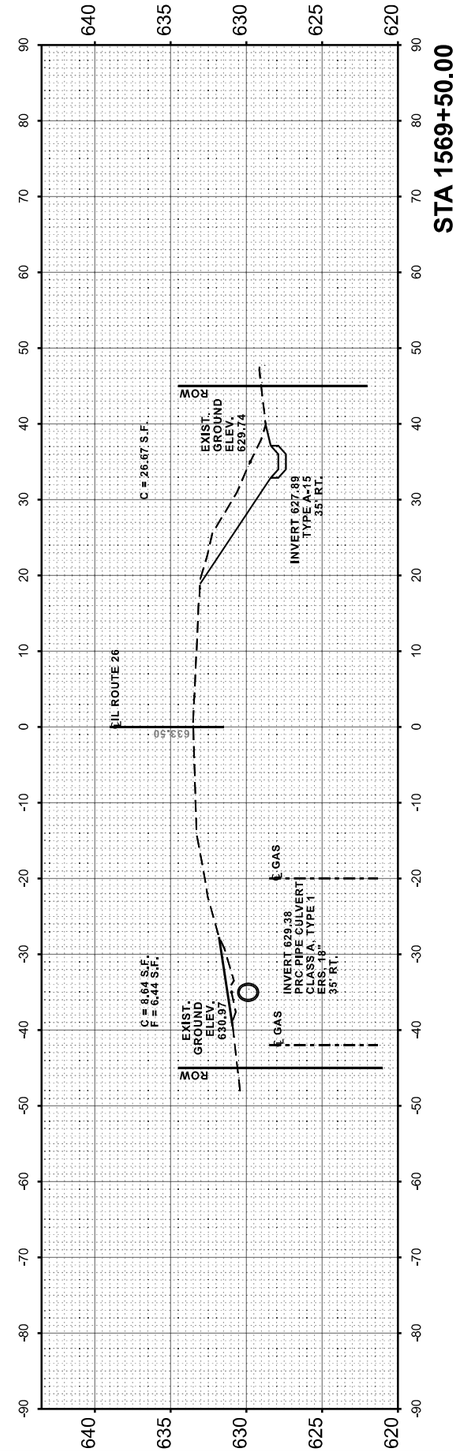

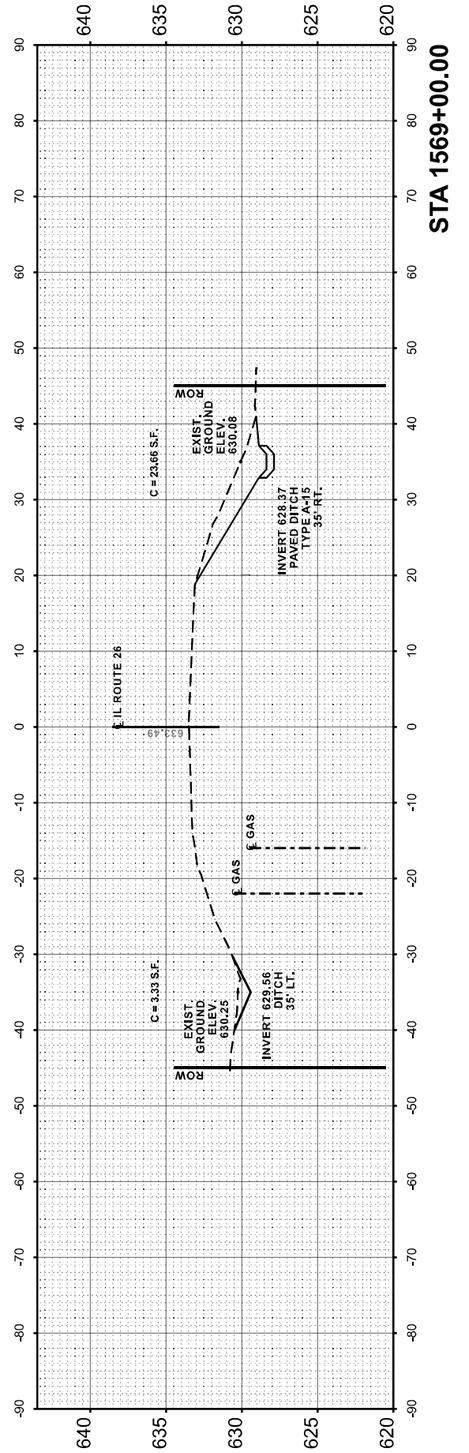

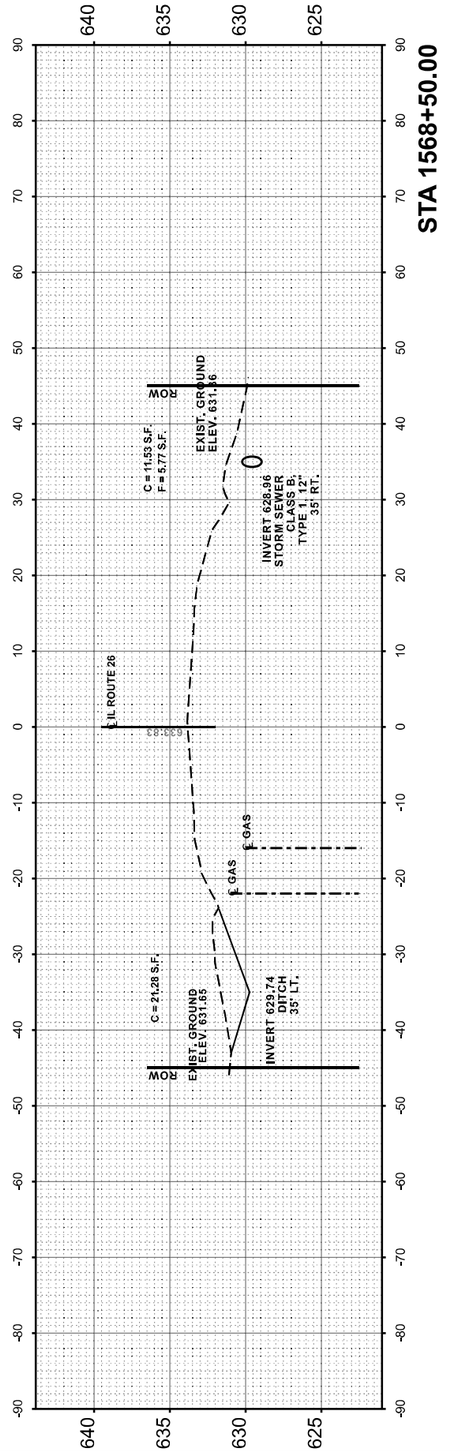

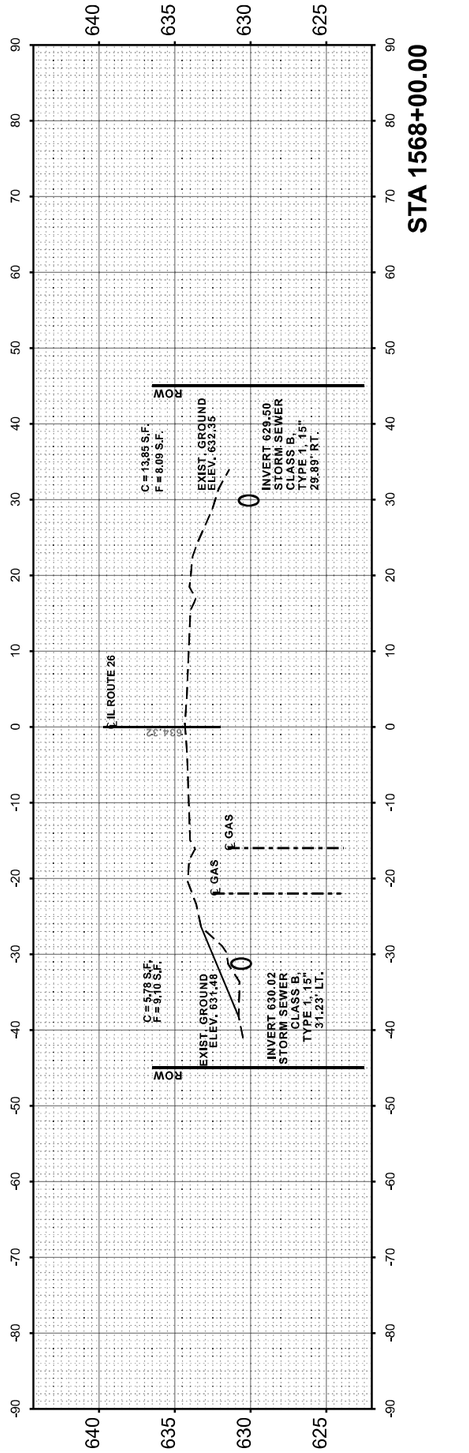

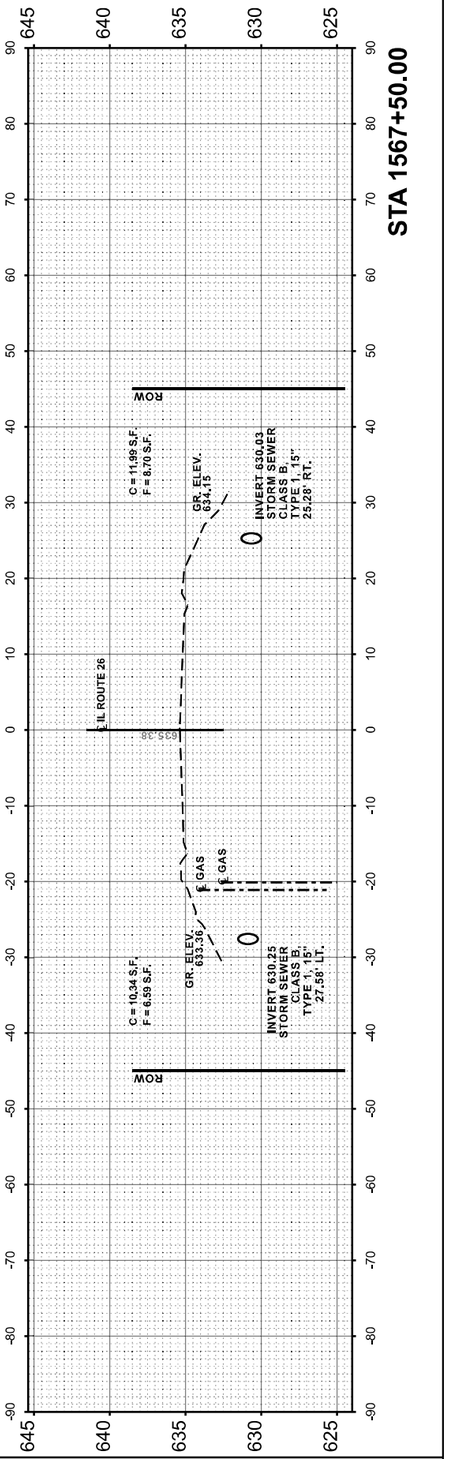

FINAL SURVEY		BY	DATE
NOTE BOOK	SURVEYED		
	PLOTTED		
	TEMPLATE		
	AREAS		
NO.	AREAS CHECKED		

ORIGINAL SURVEY		BY	DATE
NOTE BOOK	SURVEYED		
	PLOTTED		
	TEMPLATE		
	AREAS		
NO.	AREAS CHECKED		

MODEL: EXRTE26N - 1567+50.00 [Sheet]
FILE NAME: c:\pw_work\pwidot\woodshank\d1027988\66P89.dgn

USER NAME = ronald.woodshank	DESIGNED - RW	REVISED -	
	DRAWN - RW	REVISED -	
	CHECKED - JS	REVISED -	
PLOT DATE = 11/1/2024	DATE - 10/22/2024	REVISED -	

STATE OF ILLINOIS
DEPARTMENT OF TRANSPORTATION

CROSS SECTIONS

SCALE: 1"=10' | SHEET 1 OF 6 SHEETS | STA. | TO STA.

F.A.P. RTE.	SECTION	COUNTY	TOTAL SHEETS	SHEET NO.
316	(116)DR,T	BUREAU	25	22
		CONTRACT NO. 66P89		
		ILLINOIS FED. AID PROJECT		

FINAL SURVEY		BY	DATE
NOTE BOOK	SURVEYED		
	PLOTTED		
	TEMPLATE		
	AREAS		
NO.	AREAS CHECKED		

ORIGINAL SURVEY		BY	DATE
NOTE BOOK	SURVEYED		
	PLOTTED		
	TEMPLATE		
	AREAS		
NO.	AREAS CHECKED		

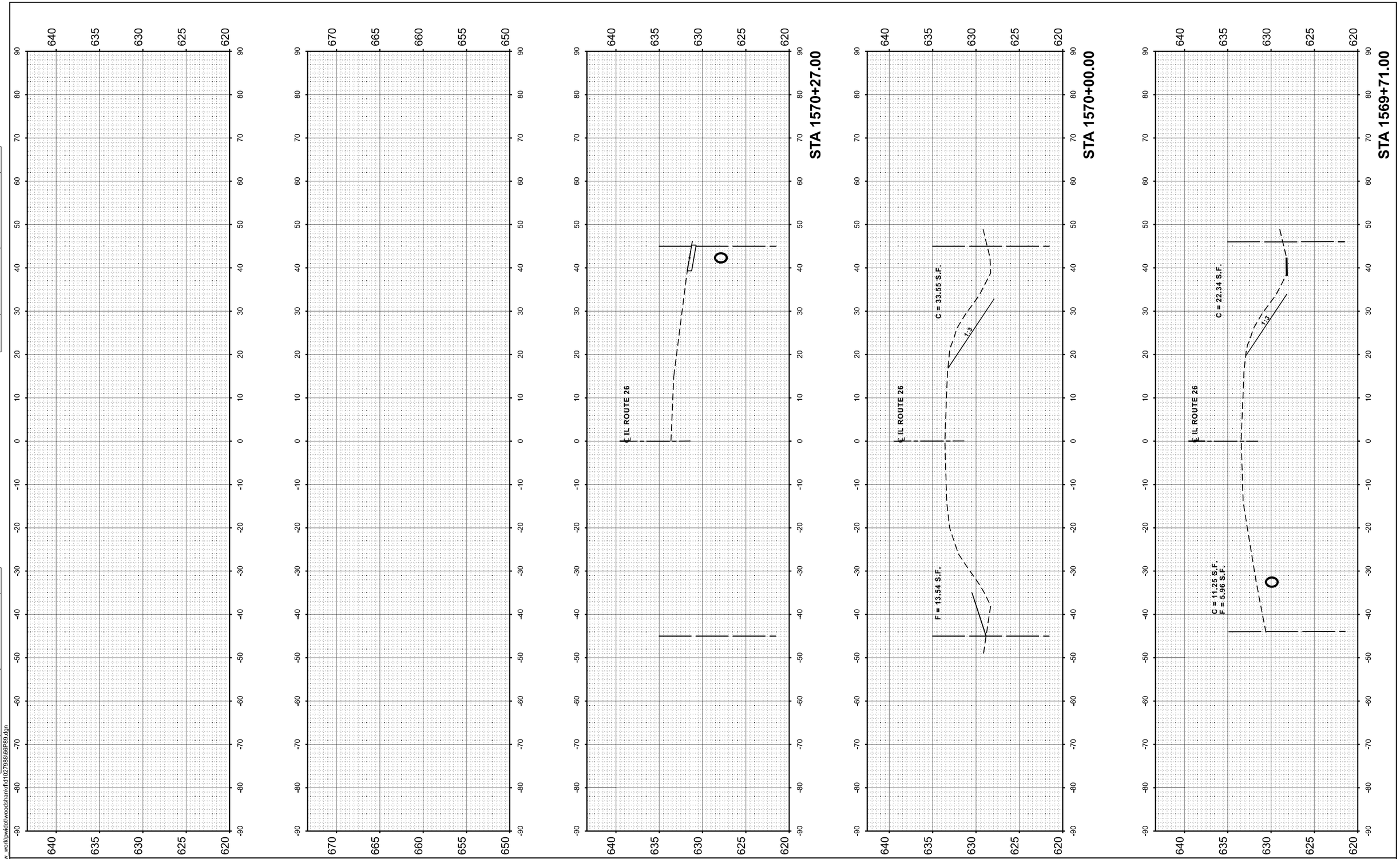

MODEL: Default
FILE NAME: c:\pw_work\pwidot\woodshank\rfd102798\l66P89.dgn

USER NAME = ronald.woodshank	DESIGNED -	REVISED -
	DRAWN -	REVISED -
	CHECKED -	REVISED -
PLOT DATE = 11/1/2024	DATE -	REVISED -

STATE OF ILLINOIS
DEPARTMENT OF TRANSPORTATION

CROSS SECTIONS

SCALE: | SHEET 4 OF 6 SHEETS | STA. 1560+00 TO STA. 1570+00

F.A.P. RTE.	SECTION	COUNTY	TOTAL SHEETS	SHEET NO.
316	(116)CGR,SLP	BUREAU	25	23
		CONTRACT NO. 66P89		
		ILLINOIS	FED. AID PROJECT	

FINAL SURVEY		BY	DATE
NOTE BOOK	SURVEYED		
	PLOTTED		
	TEMPLATE		
	AREAS		
NO.	AREAS CHECKED		

ORIGINAL SURVEY		BY	DATE
NOTE BOOK	SURVEYED		
	PLOTTED		
	TEMPLATE		
	AREAS		
NO.	AREAS CHECKED		

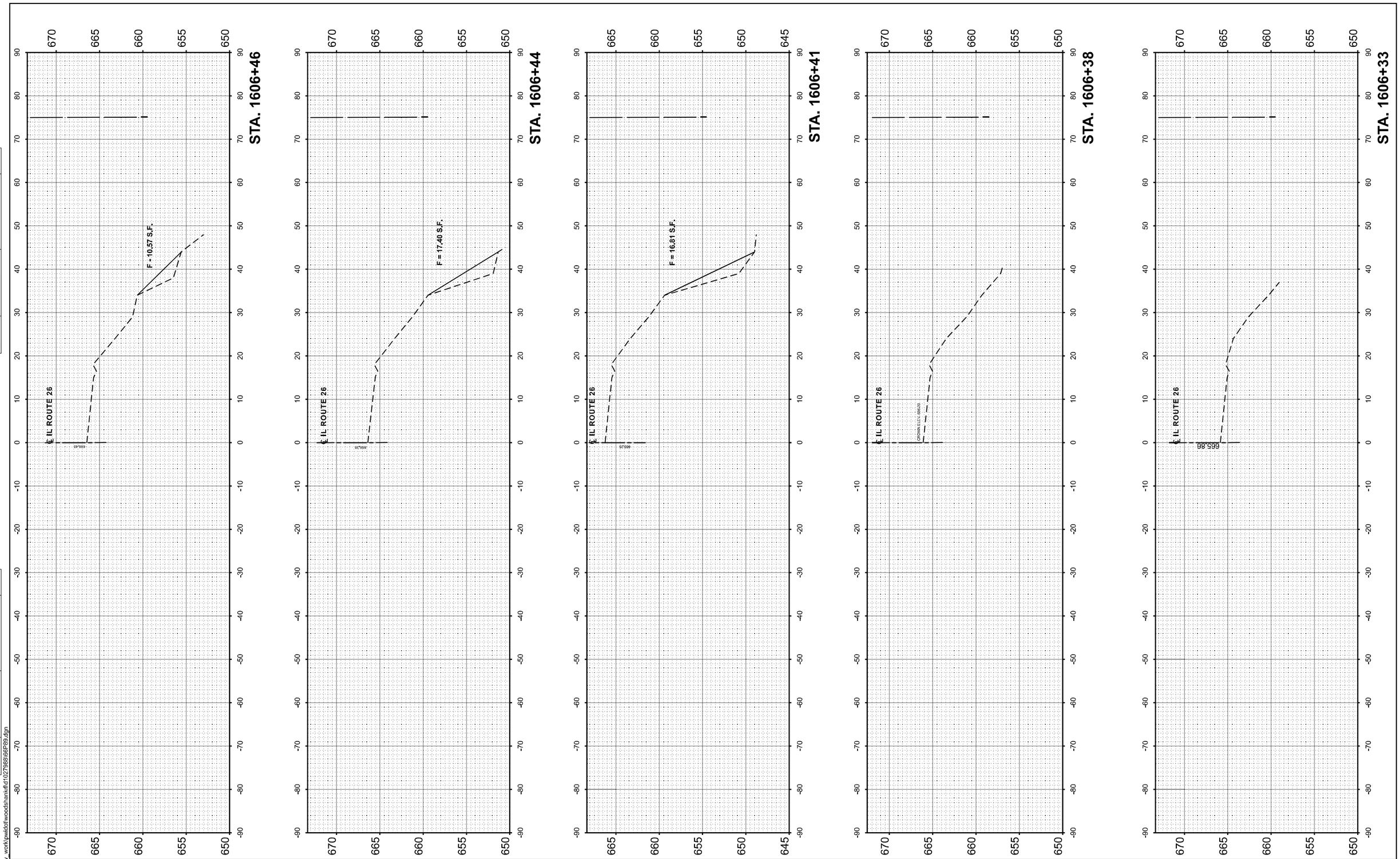

MODEL: Default
FILE NAME: c:\pw_work\pwidot\woodshank\d102798\66P89.dgn

USER NAME = ronald.woodshank	DESIGNED -	REVISED -
	DRAWN -	REVISED -
	CHECKED -	REVISED -
PLOT DATE = 11/1/2024	DATE -	REVISED -

STATE OF ILLINOIS
DEPARTMENT OF TRANSPORTATION

CROSS SECTIONS

SCALE: | SHEET 5 OF 6 SHEETS | STA. 1560+00 TO STA. 1570+00

F.A.P. RTE.	SECTION	COUNTY	TOTAL SHEETS	SHEET NO.
316	(116)CGR,SLP	BUREAU	25	24
		CONTRACT NO. 66P89		
		ILLINOIS	FED. AID PROJECT	

FINAL SURVEY		BY	DATE
NOTE BOOK	SURVEYED		
	PLOTTED		
	TEMPLATE		
	AREAS		
NO.	AREAS CHECKED		

ORIGINAL SURVEY		BY	DATE
NOTE BOOK	SURVEYED		
	PLOTTED		
	TEMPLATE		
	AREAS		
NO.	AREAS CHECKED		

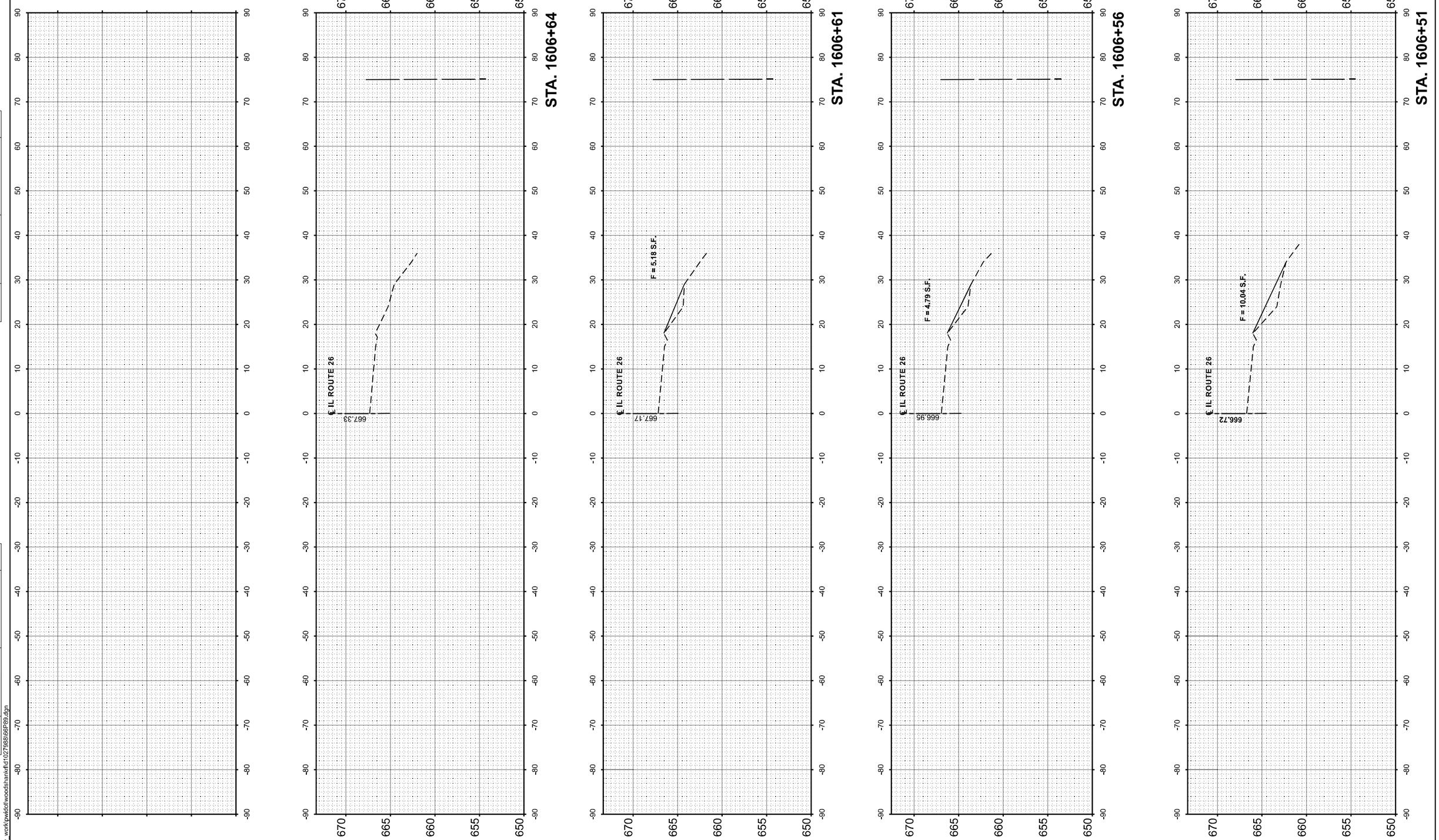

MODEL: Default
FILE NAME: c:\pw_work\pwidot\woodshank\fd102798\66P89.dgn

USER NAME = ronald.woodshank	DESIGNED -	REVISED -
	DRAWN -	REVISED -
	CHECKED -	REVISED -
PLOT DATE = 11/1/2024	DATE -	REVISED -

STATE OF ILLINOIS
DEPARTMENT OF TRANSPORTATION

CROSS SECTIONS

SCALE: | SHEET 6 OF 6 SHEETS | STA. 1560+00 TO STA. 1570+00

F.A.P. RTE.	SECTION	COUNTY	TOTAL SHEETS	SHEET NO.
316	(116)CGR,SLP	BUREAU	25	25
		CONTRACT NO. 66P89		
		ILLINOIS	FED. AID PROJECT	