04-25-2025 LETTING ITEM 083

F.A.P. RTE.	SECTION	COUNTY	TOTAL SHEETS	SHEET NO.
693	118RS-8,W-2	TAZEWELL	292*	1
	ILLINOIS	CONTRACT NO. 68A65		

*292 + 1 = 293 TOTAL SHEETS

STATE OF ILLINOIS
DEPARTMENT OF TRANSPORTATION

D-94-009-12

FOR INDEX OF SHEETS, SEE SHEET NO. 2

PROPOSED HIGHWAY PLANS

FAP ROUTE 693 (IL 9)
SECTION 118RS-8,W-2
PROJECT NHPP-B5LT(281)
WIDENING AND RESURFACING
TAZEWELL COUNTY

C-94-008-12

LOCATION OF SECTION INDICATED THUS:-

PROJECT DESCRIPTION:
THIS PROJECT CONSISTS OF PAVEMENT WIDENING OF IL 9 FOR THE ADDITION OF A BIDIRECTIONAL TURN LANE AND BIKE LANES. ADDITIONAL WORK INCLUDES BUT NOT LIMITED TO: PAVEMENT PATCHING, MILLING AND RESURFACING, ADA IMPROVEMENTS, DRAINAGE UPGRADES, PAVEMENT MARKING, AND OTHER RELATED COLLATERAL WORK NECESSARY TO COMPLETE THE WORK IN THE PLANS AND AS DESCRIBED HEREIN.

DESIGN DESIGNATION:
IL RT. 9
OTHER PRINCIPAL ARTERIAL

ADT = 7800 (2023)
MU = 3.80% (2023)
SU = 3.21% (2023)

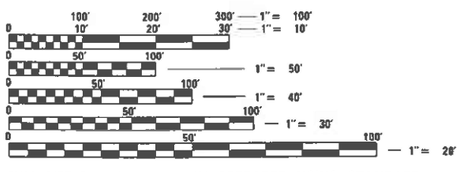

FULL SIZE PLANS HAVE BEEN PREPARED USING STANDARD ENGINEERING SCALES. REDUCED SIZED PLANS WILL NOT CONFORM TO STANDARD SCALES. IN MAKING MEASUREMENTS ON REDUCED PLANS, THE ABOVE SCALES MAY BE USED.

J.U.L.I.E.
JOINT UTILITY LOCATION INFORMATION FOR EXCAVATORS
1-800-892-0123
OR 811

PROJECT BEGINS
STA. 364 + 00

STATION EQUATION
STA. 435 + 04.09 BK =
STA. 434 + 73.24 AH

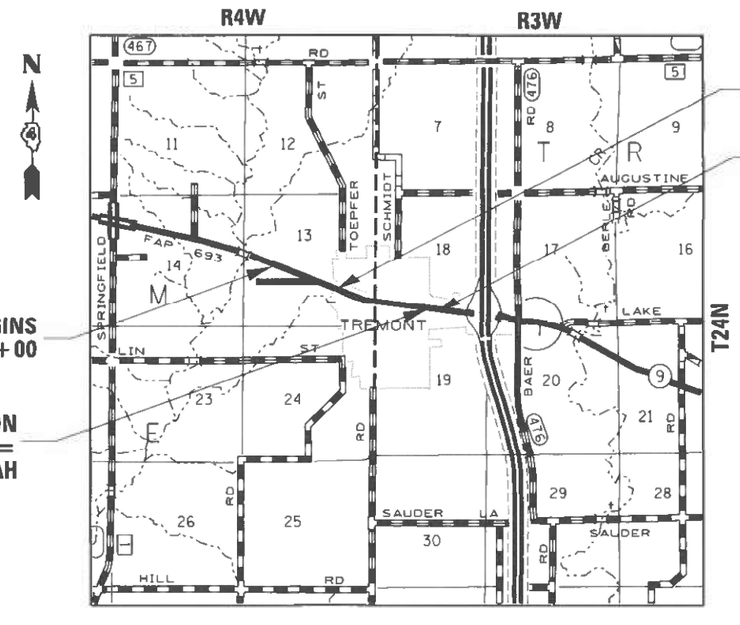

TIBER CREEK
PROP. SN 090-2507

PROJECT ENDS
STA. 438 + 30

GROSS LENGTH = 7446.5 FT. = 1.41 MILE
NET LENGTH = 7446.5 FT. = 1.41 MILE

STATE OF ILLINOIS
DEPARTMENT OF TRANSPORTATION

SUBMITTED Feb 13 2025
Kensil A Garnett PSO
REGIONAL ENGINEER

March 21 2025
ENGINEER OF DESIGN AND ENVIRONMENT

March 21 2025
DIRECTOR OF HIGHWAYS PROJECT IMPLEMENTATION

PROJECT ENGINEER: REBECCA MARRUFFO 309-671-3394
PROJECT MANAGER: ANNA DEVINE 309-671-3475

CATALOG NO. 034713-00D
CONTRACT NO. 68A65

PRINTED BY THE AUTHORITY OF THE STATE OF ILLINOIS

REV. 3/19/25

COMMITMENTS:

Commitments are not to be altered without the written approval of all parties to which the commitment was made.

JOHN D. BAER AND BRENDA L. BAER (PARCEL NO. 4ACG020)
15739 TOEPFER STREET
TREMONT, ILLINOIS 61568

- ACCESS TO THE PROPERTY FROM SOUTH LOCUST STREET SHALL BE MAINTAINED AT ALL TIMES DURING CONSTRUCTION.
- THE PROPERTY OWNER SHALL BE NOTIFIED 30 DAYS PRIOR TO ANY NEW CONSTRUCTION WORK ALONG THEIR PROPERTY LINE AT (309)642–0635.

GETZ FAMILY LIMITED PARTNERSHIP (PARCEL NO. 4ACG001)
P.O. BOX 157
MORTON, ILLINOIS 61550

- A FIELD ENTRANCE, WITH A WIDTH OF 30 FEET, SHALL BE INSTALLED AT APPROXIMATE STATION 372+50.

LEE KERR (PARCEL NO. 4ACG013)
506 W. PEARL STREET
TREMONT, ILLINOIS 61568

- PROPERTY OWNER SHALL BE NOTIFIED AT LEAST 30 DAYS BEFORE THE START OF ANY NEW CONSTRUCTION ALONG THIER PROPERTY LINE AT (309) 256–3177

VIRGINA LANG (PARCEL NO. 4ACG005)
700 W. PEARL STREET
TREMONT, ILLINOIS 61568

- THE PROPERTY OWNER SHALL BE NOTIFIED 30 DAYS IN ADVANCE OF ANY WORK BEING PERFORMED AT THE PROPERTY.

INDEX OF SHEETS

1	COVER SHEET
2–4	INDEX OF SHEETS, COMMITMENTS, GENERAL NOTES, AND JOB SPECIFIC NOTES
5–10	STATUS OF UTILITIES
11–27	SUMMARY OF QUANTITIES
28–41	SCHEDULES OF QUANTITIES
42–47	TYPICAL SECTIONS
48	LINE DIAGRAM
49–52	ALIGNMENT, TIES, AND BENCHMARKS
53–58	RIGHT–OF–WAY SHEETS
59–71	REMOVAL PLANS
72–84	PLAN & PROFILE – IL ROUTE 9
85–88	PLAN & PROFILE – SIDE ROADS
89–100	TRAFFIC CONTROL PLANS
101–126	DRAINAGE & EROSION CONTROL PLANS
127–136	LANDSCAPE PLAN
137–143	PAVEMENT MARKING PLAN
144–147	RRFB DETAILS
148–154	ADA DETAILS
155–157	FLUME DETAILS
158–162	CULVERT DETAILS
163–167	JOB SPECIFIC DETAILS
168–172	FOR INFORMATION ONLY SHEETS
173–241	CROSS–SECTIONS – IL 9
242–259	CROSS–SECTIONS – SIDE ROADS
260–292	DISTRICT CADD STANDARDS

HIGHWAY STANDARDS

000001–08	482011–03	606001–08	701326–04
001001–02	515001–04	606006–04	701336–07
001006	542001–06	606101–05	701501–06
280001–07	542011–02	664001–02	701502–09
420001–10	542301–03	666001–01	701701–10
420101–07	542306–03	701001–02	701801–06
420111–04	542311–07	701006–05	701901–10
420701–03	542401–04	701011–04	704001–08
424001–12	602301–04	701201–05	720001–01
424006–06	602401–07	701206–05	720006–04
424011–05	602402–03	701301–04	725001–01
424021–07	602701–02	701306–04	728001–01
424026–04	604001–05	701311–03	780001–05
442201–03	604036–03	701321–19	781001–04
482001–02			782006–01
			BLR–21–9

DISTRICT STANDARDS

205001	423201	602101
280101	424106	604001
406101	510001	604201
406201	540000	606101
406301	540106	630101
406501	602001	635003
423002	602006	701331
423106	602021	780001
423116	602026	

GENERAL NOTES:

SOIL REPORT AVAILABILITY

The Soils Report and all soils data collected and processed in conjunction with the design this of improvement is on file at the District Office where it is available for inspection by Contractors or prospective bidders. By submitting a bid, the Contractor acknowledges that the Soils Report and data have been made available, that the Contractor is aware of the report contents and appendices, and that the Soils Report is part of the contract documents.

AVAILABILITY OF ELECTRONIC FILES

Micro Station and GEOPAK files of this project will be made available to the Contractor after contract award. If there is a conflict between the electronic files and the printed contract plans and documents, the printed contract plans and documents shall take precedence over the electronic files. The Contractor shall accept all risk associated with using the electronic files and shall hold the Department harmless for any errors or omissions in the electronic files and the data contained therein. Errors or delays resulting from the use of the electronic files by the Contractor shall not result in an extension of time for any interim or final completion date or shall not be considered cause for additional compensation. The Contractor shall not use, share, or distribute these electronic files except for the purpose of constructing this contract. Any claims by third parties due to use or errors shall be the responsibility of the Contractor. The Contractor shall include this disclaimer with the transfer of these electronic files to any other parties and shall include appropriate language binding them to similar responsibilities.

TREE REMOVAL – UTILITY RELOCATION

Tree removal may be necessary prior to utility companies being able to relocate their facilities outside the construction limits. The Contractor should coordinate any contract tree removal activities with the utility companies to eliminate conflicts and potential delays caused by utility tree removal activities or incomplete utility relocations.

CONSECUTIVE SIDE STREET (ROAD) CLOSURE – PROHIBITED

1. No two consecutive side streets (roads) may be closed at the same time during construction. The Contractor must alternate streets (roads).
2. Adjacent side roads will not be closed simultaneously. BLR Standard 21 shall be used for all local road closures without any entrances within the closed area. BLR Standard 22 can be used where it is necessary to allow local traffic access.

TEMPORARY MATERIAL REQUIREMENTS – UTILITY AND DRIVEWAY CROSSINGS

Incidental hot–mix asphalt surface shall be used for all temporary side road crossings. Aggregate surface course may be used for all driveway crossings except during winter shutdown in accordance with Article 107.09.

WINTER SHUTDOWN RESTRICTIONS ON COLD MILLED PROJECTS

Prior to winter shutdown the following steps shall be taken:

- All cold milled surfaces shall be overlaid.
- All lanes shall be reopened to traffic.
- Manholes, where applicable, shall be adjusted to the elevation of the binder course/leveling binder to ease in plowing snow, and re–adjusted to finished grade in the Spring. The initial manhole adjustment will be paid for at the contract unit price and any re–adjustment, as directed by the Engineer, will be paid for in accordance with Article 109.04.
- Temporary or permanent pavement marking shall be placed as applicable.
- Polymer Leveling Binder shall not be exposed over winter shutdown.

TREE REMOVAL RESTRICTIONS

Due to the potential presence of endangered bats no tree removal will be allowed on this project between April 1st and September 30th.

The District 4 Roadside Manager, Brittany Gavin (309) 671–4479, shall be contacted and prior approval obtained for any tree removal beyond the limits/locations included in the plans.

GENERAL NOTES CONTINUED:

ENVIRONMENTAL REVIEWS

Prior to the use of any proposed borrow areas, use areas (temporary access roads, detours, run–arounds, etc.) and/or waste areas, the Contractor shall file the required environmental resource request surveys according to Section 107.22 of the Standard Specifications. These surveys are required in order for the Department to conduct cultural and biological resource surveys for the proposed site.

Prior to any waste materials being removed from the construction site the required environmental resource surveys will need to be obtained and filed by the Contractor. Excess waste products removed from the construction site shall be disposed of as required in Section 202.03 of the Standard Specifications.

Any protruding metal bars shall be removed prior to the disposal of broken concrete at approved disposal sites.

The required environmental resource documentation shall include the following:

* BDE Form 2289 (Environmental Survey Request)
* BDE Form 2290 (Waste/Use Area Review)
* A location map showing the size limits and location of the use area
* Color photographs depicting the use area
* Borrow Area Entry Agreement form–D4 PI0101

Please note that a minimum of four weeks shall be allowed for the District to obtain the required environmental clearances and six weeks for the required borrow site environmental clearances.

AGGREGATE, TYPE B

Aggregate Shoulders, Type B shall be required for all granular construction of side roads, entrances, and mailbox turnouts, whether or not portions of the surfaces thus constructed are to be covered with a bituminous surface, except where noted differently on the plans.

AGGREGATE FOR DRIVEWAY REPLACEMENT

The material used for construction of permanent aggregate driveways shall be gravel or crushed stone as directed by the Engineer, to replace in kind the existing aggregate driveways.

No additional compensation shall be provided for this requirement but shall be considered as included in the cost of the pay item for the aggregate as specified on the plans.

BUTT JOINT CUTTING TIME RESTRICTION

Butt joints shall not be milled more than three (3) days prior to placement of the HMA surface course.

PAVING SURFACE COURSE

Continuous paving operations on the main roadway shall be maintained at all times during the construction of the hot–mix asphalt surface. No interruptions for side roads, entrances, turn lanes, etc. will be allowed.

REFLECTIVE CRACK CONTROL PLACEMENT

Strip Reflective Crack Control Treatment shall be placed on the milled surface prior to placement of binder.

ORDERING LENGTH CONFIRMATION – DRAINAGE ITEMS

The Contractor shall consult with the Engineer in regard to the exact length of the box/pipe culverts, storm sewers, and/or pipe drains required prior to ordering these items.

EXISTING DRAINAGE PIPES CONNECTED TO NEW STRUCTURES

In accordance with Section 602 of the Standard Specifications, the connecting of existing drain tiles, pipe culverts, or storm sewers to the proposed drainage system structures will not be paid for separately but shall be considered as included in the pay items provided.

TAPER REMOVAL AT FRAME & GRATES ADJUSTED BY OTHERS

At locations where frames and grates have previously been adjusted by others and they are surrounded by hot–mix asphalt tapers, the Contractor for this contract shall remove and dispose of the hot–mix asphalt taper material prior to the placement of the hot–mix asphalt surface course. This work will not be paid for separately, but will be considered as included in the cost of the HOT–MIX ASPHALT SURFACE COURSE pay item.

RIGHT–OF–WAY MARKERS

When installing right–of–way markers, care shall be taken to not disturb any existing property/right–of–way pins. If a property/right–of–way pin is found at the location of a proposed right–of–way marker, the marker shall be placed one (1) foot in front of the pin.

SIGNING

Sign locations may vary from the stations shown on the plans in accordance with directions from the Engineer at the time of construction. Sign locations may be adjusted in the field to avoid any found utilities.

All wood post locations shall be verified with the Bureau of Operations, Traffic Section, before installation.

NO PASSING ZONE VERIFICATION

The resident shall contact Operations to verify the location of no passing zones prior to placement of certerline striping.

TRANSITION PAYMENT METHOD – NEW/OLD CONSTRUCTION

Ten feet (10 ft.) (3 m) transitions shall be used to match proposed items of work to existing items in the field unless otherwise shown. The transition shall be paid for at the contract unit price for the proposed item of work specified.

ADDITIONAL SUPPLEMENTAL TRAFFIC CONTROL

The Department reserves the right at any time to add additional Traffic Control Systems or devices within the active contract limits, by means of an additional contract. All terms of Article 105.08 of the Standard Specifications shall be followed by each Contractor.

SECURING DRAINAGE STRUCTURE GRATES

Prior to routing traffic onto the shoulders as shown in the staging plans, the Contractor shall secure gratings on shoulder inlets as directed by the Engineer. This work will not be paid for separately, but shall be included in the cost of the traffic control pay item.

POLYMERIZED BITUMINOUS MATERIALS (TACK COAT) RATES

Surface Type	Residual Rate
Milled (HMA or PCC)	0.08 lb /sq ft
Existing Pavement	0.08 lb /sq ft
Fog Coat (between lifts)	0.08 lb /sq ft

HOT–MIX ASPHALT MIXTURE REQUIREMENTS

The following mixture requirements are applicable for this project:

Location(s):	Mainline	Mainline	Mainline	Shoulder	Shoulder	Mainline	Mainline	Mainline	Mainline
Mixture Use(s):	Polymer Surface 2"	Polymer Surface 1.75"	Polymer Level Binder 1"	Polymer Surface 1.75"	Polymer Level Binder 1"	Intown Binder Build Up	Incidental Surface Temporary Shoulder Temporary Pavement	Out of Town Binder Build Up	HMA Base Course HMA Widening Class D Patching HMA Shoulders (Lower Lifts)
AC/PG:	SBS or SBR 70-28	SBS or SBR 70-28	SBS or SBR 70-28	SBS or SBR 70-28	SBS or SBR 70-28	PG 58-28	PG 58-28	PG 58-28	PG 58-28
Design Air Voids:	4.0% @ N=50	4.0% @ N=50	4.0% @ N=50	4.0% @ N=50	4.0% @ N=50	4.0% @ N=50	4.0% @ N=50	4.0% @ N=50	4.0% @ N=50
Mixture Composition: (Mixture Gradation)	IL 9.5	IL 9.5	IL 4.75	IL 9.5	IL 4.75	IL 9.5	IL 9.5	IL 19.0	IL 19.0
Friction Aggregate:	Mix E	Mix E	N/A	Mix E	N/A	N/A	Mix C	N/A	N/A
Quality Management Program:	QCP	QCP	QCP	QCQA	QCQA	QCQA	QCQA	QCQA	QCQA
MTD:	YES	YES	YES	YES	YES	YES	NO	YES	YES

Note: 1) Individual lift thickness of each mix type will be no less than 3 times nominal maximum aggregate size and no more than 6 times nominal maximum aggregate size, unless otherwise approved by the Engineer.
2) For design purposes, mixture weight for all mixes is determined to be 112.0 lb/s.y./in., unless otherwise noted.
3) Sublot sizes for PFP and QCP mixes will be 1000 tons, unless otherwise agreed to by the Engineer and the paving contractor.

JOB SPECIFIC NOTES:

1. NO IN–TOWN (WEST ST. TO EAST ST.) CONSTRUCTION ACTIVITIES, LANE REDUCTIONS, AND SIDE ROAD CLOSURES SHALL BE ALLOWED THURSDAY THROUGH SUNDAY OF THE 2025 AND 2026 TREMONT TURKEY FESTIVAL.

2. THE COMMERCIAL DRIVEWAY (LT. STA. 421 + 02) FOR PINKY'S SHALL NOT BE UNDER CONSTRUCTION FROM MAY 15TH TO AUGUST 31ST, IN BOTH 2025 AND 2026 CONSTRUCTION YEARS.

3. THE COMMERCIAL ENTRANCE AT LOCUST ST. STA. 9 + 49.8, SHALL BE CONSTRUCTED IN TWO (2) PHASES TO ALLOW ACCESS AT ALL TIMES TO THE BUSINESS (200 W. PEARL ST.) AND ATM.

4. REMOVING & REINSTALLING SIGNS SHALL BE COORDINATED WITH OPERATIONS SUPERVISOR, BILL HARMANN AT (309) 693–5176. (SEE GENERAL NOTE)

5. GRATES & LIDS BEING REMOVED AND NOT REUSED SHALL BE DELIVERED TO THE HOPEDALE MAINTENANCE YARD AT 6923 PRAIRIE ROAD, HOPEDALE, IL 61747. CONTACT DALE HILES TO ARRANGE FOR DELIVERY AT 1–309–264–1865. THIS WORK SHALL BE INCLUDED IN THE COST OF THE VARIOUS DRAINAGE PAY ITEMS.

6. EXISTING DRAINS
   AT LOCATIONS WHERE EXISTING CLEAN WATER DRAINS ARE OUTLET INTO EXISTING DITCHES, THE DRAIN SHALL BE CUT OR EXTENDED TO DRAIN INTO THE PROPOSED DITCH AND/OR INLET. THE WORK SHALL BE INCLUDED IN THE COST FOR EARTH EXCAVATION.

STATUS OF UTILITIES

Company & Location Note: Stationing & Offsets are approximent unless provided by company	Min. Depth	Type of Utility	Type of conflict	Dispostion
AMEREN-ELECTRIC				
Rt. Sta. 392+80		Pole w/ guy wire #2446628	Grading & Shaping & Prop. SS	1' cut at this location - Should be OK
Aerial crossing at Sta. 393+50			Widening	Caution
Rt. Sta. 397+78		Pole #2379536	Pole in foreslope	Relocate
Rt. Sta. 399+08		Pole #2379534	Pole in foreslope - Manhole	
Rt. Sta. 403+53		Pole #2379533	Grading & Shaping & Riprap	
Lt. Sta. 412+48		Pole #2379524	Proposed Curb & Gutter	
Lt. Sta. 413+15		Pole #2379522	Causing Sight Distance Issues	
Rt. Sta. 413+20		Guy wire attached to pole #2379506	Proposed Inlet	
Lt. Sta. 414+20		Pole with guy wire #2379521	Proposed Sidewalk	
Lt. Sta. 415+30		Pole #2379520		
Lt. Sta. 416+50		Pole with guy wire #2379519		
Aerial crossing at Sta. 417+33			Equipment	Caution
Lt. Sta. 418+60		Pole #2451422	Proposed Sidewalk	Relocate
Aerial crossing at Sta. 419+91			Equipment	Caution
Lt. Sta. 419+90		Pole #2451421	Proposed Sidewalk	Relocate
Rt. Sta. 420+80		Pole #2451420		Remove Abandoned Pole
Lt. Sta. 421+30		Pole #2451423		Relocate
Lt. Sta. 422+50		Pole with guy wire #2451424		
Aerial crossing at Sta. 422+50			Equipment	Caution
Rt. Sta. 422+50		Pole #2379760 (Street Light)	Proposed Curb & Gutter	
Lt. Sta. 430+00		Pole with light #2379823	Proposed Sicewalk/ADA ramp	Relocate
Aerial crossing at Sta. 430+10			Equipment	Caution

NOTES:

- ADJUSTMENT OF WATER VALVES, CURB BOXES, AND SANITARY MANHOLES SHALL BE INCLUDED IN THE CONTRACT. WORK SHALL BE PERFORMED BY THE CONTRACTOR.
- PLEASE CHECK ALL YOUR FACILITIES WITHIN THE CONSTRUCTION LIMITS OF THIS PROJECT.

1. PAVEMENT REMOVAL, FULL DEPTH PAVEMENT PATCHING, PROPOSED WIDENING, PROPOSED CURB AND GUTTER, AND ADA RAMP.
2. PROPOSED DRAINAGE STRUCTURES (CULVERS, STORM SEWER, INLETS, MANHOLES)

STATUS OF UTILITIES

Company & Location Note: Stationing & Offsets are approximent unless provided by company	Min. Depth	Type of Utility	Type of conflict	Dispostion
AMEREN-GAS				
Rt. Sta. 380+68 to 388+28 (offset=35')	36"	4" PE		Caution
Rt. Sta. 388+28 to 390+25 (offset=34' to 23')				
Rt. Sta. 390+25 to 391+50 (offset= 23')			Widening	
IL 9 crossing at 389+60		2" STL		
Rt. Sta. 391+50 to 404+00 (offset =23' to 24')		4" STL	Widening & Proposed 8x4 culvert	Conflict
IL 9 crossing at 396+43		2" STL		
Rt. Sta. 407+51.3		4: STL	Proposed inlet	Caution
Rt. Sta. 409+94.7				
IL 9 crossing at 419+72		4" STL		
Lt. Sta. 424+30 to 425+40			Proposed Storm Sewer	Relocate
Lt. Sta. 428+12.79			Proposed Inlet Manhole	
IL 9 crossing at 434+75				Caution
COMCAST				
See Ameren conflicts above for poles/aerial lines that are in conflict				
Right Side (south of IL 9)				
Rt. Sta. 374+80 to 390+50	18"	Buried Cable	Proposed ditch, entrance and crossroad culverts	Relocate
Rt. Sta. 390+25 to 392+50				Caution
Rt. Sta. 392+50 to 393+00			Proposed storm sewer	Relocate
Rt. Sta. 393+00 to 396+00			Earthwork	Caution
Left Side (north of IL 9)				
Lt. Sta. 417+50 to 424+75	18"	Buried Cable		Caution
Lt. Sta. 424+75 to 425+00			Proposed Manhole	Relocate
Lt. Sta. 425+00 to 429+00				Caution
Lt. Sta. 429+00 to 430+25			Propcsed Curb	Relocate

NOTES:

- ADJUSTMENT OF WATER VALVES, CURB BOXES, AND SANITARY MANHOLES SHALL BE INCLUDED IN THE CONTRACT. WORK SHALL BE PERFORMED BY THE CONTRACTOR.
- PLEASE CHECK ALL YOUR FACILITIES WITHIN THE CONSTRUCTION LIMITS OF THIS PROJECT.

1. PAVEMENT REMOVAL, FULL DEPTH PAVEMENT PATCHING, PROPOSED WIDENING, PROPOSED CURB AND GUTTER, AND ADA RAMP.
2. PROPOSED DRAINAGE STRUCTURES (CULVERS, STORM SEWER, INLETS, MANHOLES)

STATUS OF UTILITIES

Company & Location Note: Stationing & Offsets are approximent unless provided by company	Min. Depth	Type of Utility	Type of conflict	Dispostion
FRONTIER				
See Ameren conflicts above for poles/aerial lines that are in conflict				
Rt. Sta. 388+50 to 389+84.62	36"	Buried Fiber	See Note 1	Relocate
Rt. Sta. 389+84.62		Pedistal / Marker	Proposed Entrance	
IL 9 crossing ~ Sta. 389+60	36"	Buried Fiber	See Note 1	Caution
Rt. Sta. 412+72 (SW Quadrant- West Street)		Handholes and/or markers	Proposed curb with new radius	Relocate (Company to verify ownership)
Rt. Sta. 413+50 (SE Quadrant- West Street)			Proposed Inlet in grass	
Rt. Sta. 411+22 to 414+20	36"	Buried Fiber	See Note 1	Caution
IL 9 crossing at 414+20				
Rt. Sta. 417+26 (SW Quadrant- Locust Street)		Handholes and/or markers	Proposed ADA Ramp	Relocate
Lt. Sta. 414+20 to 415+00	36"	Buried Fiber	See Note 1	Caution
Lt. Sta. 415+00			Proposed Inlet	Relocate
Lt. Sta. 415+00 to 422+57			See Note 1	Caution
Lt. Sta. 422+57		Handholes and/or markers	Proposed Sidewalk	Relocate
Lt. Sta. 422+57 to 424+89.53	36"	Buried Fiber	See Note 1	Caution
Lt. Sta. 424+89.53			Proposed Storm Sewer	Relocate
Lt. Sta. 424+89.53 to 425+66			See Note 1 & 2	Caution
IL 9 crossing at 425+66 (James St.)				
Rt. Sta. 425+66 to 438+46.5				
BLUEBIRD/PEG				
Rt. Sta. 368+00 to 371+00	24"	Buried Fiber/ Copper	Subgrade improvement	6" of coverage - Relocate
Rt. Sta. 371+00 to 374+75				1' to 1 1/2' of coverage - Caution
Rt. Sta. 374+75 to 375+50				6" of coverage - Relocate
Rt. Sta. 375+50 to 383+50				1' to 1 1/2' of coverage - Caution
Rt. Sta. 383+50 to 386+25				6" of coverage - Relocate
Rt. Sta. 390+00 to 405+00			Proposed Storm Sewer	Relocate
Rt. Sta. 405+00 to 412+50				Caution
Rt. Sta. 412+72 (SW Quadrant - West Street)		Handhole & Marker	Proposed curb with new radius	Relocate (Company to verify ownership)
Rt. Sta.413+50 (SE Quadrant - West Street)		Utility Pole & Marker		Caution (Company to verify ownership)
Rt. Sta. 413+70 (SE Quadrant - West Street)		Handhole & Marker		
Lt. Sta. 413+20 (NE Quadrant - West Street)		(2) Pedistals		
Lt. Sta. 413+50 (SE Quadrant - West Street)		Handhole & Marker	Proposed Inlet in grass	Relocate (Company to verify ownership)
IL 9 crossing at 413+30/413+50		Buried Fiber/ Copper	See Note 1	Caution
Rt. Side (West Street to Locust Street)			Proposed Storm Sewer	Relocate (Company to verify ownership)
Lt. Sta. 416+00 to 424+89.53		Buried Fiber/ Copper	See Note 1	Caution
Lt. Sta. 424+89.53			Proposed Storm Sewer	Relocate
Lt. Sta. 424+89.53 to 425+75			See Note 1	Conflict
Lt. Sta. 429+25 to 430+25			Proposed Curb/Grade change	Conflict
STRATUS				
Rt. Sta.367+88 to 422+00	24"	Fiber	See Note 1 & 2	Relocate
Rt. Sta. 412+72 (SW Quadrant - West Street)		Handhole & Marker	Proposed curb with new radius	Relocate (Company to verify ownership)
Rt. Sta. 417+26 (SW Quadrant- Locust Street)		(2) Handholes & Markers	Proposed ADA Ramp	Relocate (Company to verify ownership)
IL 9 crossing at 421+70 (Sampson St.)		Handhole & Fiber	See Note 1 & 2	Relocate (Company to verify ownership)
Rt. Sta. 422+00 to 434+50 (Sampson Street to Chestnut Street)			Sidewalk & back of curb foundation	Relocate (Company to verify ownership)

NOTES:

- ADJUSTMENT OF WATER VALVES, CURB BOXES, AND SANITARY MANHOLES SHALL BE INCLUDED IN THE CONTRACT. WORK SHALL BE PERFORMED BY THE CONTRACTOR.
- PLEASE CHECK ALL YOUR FACILITIES WITHIN THE CONSTRUCTION LIMITS OF THIS PROJECT.

1. PAVEMENT REMOVAL, FULL DEPTH PAVEMENT PATCHING, PROPOSED WIDENING, PROPOSED CURB AND GUTTER, AND ADA RAMP.
2. PROPOSED DRAINAGE STRUCTURES (CULVERS, STORM SEWER, INLETS, MANHOLES)

STATUS OF UTILITIES

Company & Location Note: Stationing & Offsets are approximent unless provided by company	Min. Depth	Type of Utility	Type of conflict	Dispostion
TREMONT-WATER				
Rt. Sta. 389+92	36"	Fire Hydrant	Grading & Shaping Ditch	**Adjust**
Rt. Sta. 392+90.46 (offset=40')			See Note 2	**Relocate**
IL 9 crossing at 390+26			Full Depth Pavement Patching	Caution
Rt. Sta. 397+78.5		Fire Hydrant	Grading & Shaping Ditch	**Adjust**
Rt. Sta. 397+78.5 to 402+42		Water Main & Service Lines	Widening	Caution - See Note 3
Rt. Sta. 402+42 to 412+93			Grading & Shaping Ditch	Caution
IL 9 crossing at 411+00		Water Main	Proposed Flume	**Company needs to verify depth and offset under culvert to verify not in conflict**
Rt. 412+93 to 413+56		Water Main	See Note 1 & 2	**Conflict**
Rt. Sta. 417+26 (offset= 26.5')		Fire Hydrant	See Note 1	**Conflict**
Rt. Sta. 417+34		Valve		**Adjust**
Lt. Sta. 417+34		Curb Box		
Rt. Sta. 417+46		2 Valves		
Lt. Sta. 417+58		Valve		
IL 9 crossing at 417+58 (Locust St.)		Water Main	Full Depth Pavement Patching	Caution
Lt. Sta. 417+80		Curb Box		**Adjust**
IL 9 crossing (Sampson St.)		8" Water Main	Full Depth Pavement Patching	Caution
Rt. Sta. 422+42 (offset= 48')		Fire Hydrant		
Lt. Sta. 422+35 (offset= 67')				
IL 9 crossing at 429+70 (Harris St.)		Water Main	Full Depth Pavement Patching	Caution
Rt. Sta. 429+70 (offset= 45')		Fire Hydrant	See Note 1	**Conflict**
Lt. Sta. 429+70 (offset= 46')		Fire Hydrant		Caution
		Water Valve		**Conflict**

NOTES:

- ADJUSTMENT OF WATER VALVES, CURB BOXES, AND SANITARY MANHOLES SHALL BE INCLUDED IN THE CONTRACT. WORK SHALL BE PERFORMED BY THE CONTRACTOR.
- PLEASE CHECK ALL YOUR FACILITIES WITHIN THE CONSTRUCTION LIMITS OF THIS PROJECT.

1. PAVEMENT REMOVAL, FULL DEPTH PAVEMENT PATCHING, PROPOSED WIDENING, PROPOSED CURB AND GUTTER, AND ADA RAMP.
2. PROPOSED DRAINAGE STRUCTURES (CULVERS, STORM SEWER, INLETS, MANHOLES)

STATUS OF UTILITIES

Company & Location Note: Stationing & Offsets are approximent unless provided by company	Min. Depth	Type of Utility	Type of conflict	Dispostion
TREMONT-SANITARY				
See Cross Sections for Depths				
Rt. Sta. 393+38.5 (offset=47.3')		Manhole No. 53B	Grading & Shaping Ditch	Reconstruct (By contractor)
Rt. Sta. 397+86.14 (offset=31.6')		Manhole No. 53	Proposed Sidewalk	Reconstruct (By contractor) (Use ADA compliant lid)
IL 9 crossing at 397+75			Patching, Widening & Resurfacing	Caution
Rt. Sta. 401+31.3 (offset=33.6')		Manhole No. 52		Reconstruct (By contractor) (Use ADA compliant lid)
Rt. Sta. 402+81 (offset=35.5')		Manhole No. 196B	Proposed Sidewalk	Reconstruct (By contractor)
Rt. Sta. 402+81 to 403+27.8		8' PVC Sanitary Sewer under Tiber Creek	Riprap	Caution
Rt. Sta. 404+86.5 (offset=37.7')		Abandoned Lift Station	Proposed Sidewalk	Remove and/or Fill-Work (By Contractor)
Rt. Sta. 405+02.1 (offset=37.4')		Manhole No. 30A	Grading & Shaping Ditch	Reconstruct (leave in place, extend to match new ground elevation)(By Contractor)
Rt. Sta. 407+83.5 (offset=39.1')		Manhole No. 31	Grading & Shaping Ditch	Reconstruct (leave in place, extend to match new ground elevation)(By Contractor)
Rt. Sta. 411+07.7 (offset=40.1')		Manhole No. 32	Grading & Shaping Ditch	Reconstruct (leave in place, extend to match new ground elevation)(By Contractor)
Rt. Sta. 413+45.2 (offset=52.8')		Manhole No. 33		Caution
Rt. Sta. 413+51.8 (offset=77')		Manhole No. 33A		Caution
Rt. Sta. 415+14.8 (offset=50.5')		Manhole No. 34A		Caution
Rt. Sta. 415+32.8 (offset=52')		Manhole No. 34	Proposed Entrance & Sidewalk	Adjust with ADA compliant lid (By Contractor)
Rt. Sta. 416+86.6 (offset=31.8')		Manhole No. ?	Proposed Sidewalk	Adjust with ADA compliant lid (By Contractor)
Rt. Sta. 417+53.3 (offset=35')		Manhole No. 35	Butt Joint & crosswalk	Adjust with ADA compliant lid (By Contractor)
Rt. Sta. 419+77 (offset=29')		Manhole No. 36	Proposed Entrance & Sidewalk	Adjust (By Contractor)
Rt. Sta. 419+78.8 (offset=35.0')		Manhole No. 36A	Proposed Entrance & Sidewalk	Adjust with ADA compliant lid (By Contractor)
Rt. Sta.422+71 (offset=32.8')		Manhole No.37A	Proposed Sidewalk	Adjust (By Contractor)
Rt. Sta. 422+85 (offset=28.4')		Manhole No. 37		Caution
Rt. Sta. 425+01 (offset=24.4')		Manhole No. 38A	Proposed Sidewalk	Adjust with ADA compliant lid (By Contractor)
Rt. Sta. 425+70 (offset=22.6')		Manhole No. 38	Full Depth Pavement Patch	Adjust (By Contractor)
Rt. Sta. 430+06 (offset=27.6')		Manhole No. 39	Full Depth Pavement Patch	Adjust with ADA compliant lid (By Contractor)
Rt. Sta. 430+28.4 (offset=28')		Manhole No. 39A	Proposed Sidewalk	Caution
Rt. Sta. 432+23 (offset=25.4')		Manhole No. 40	Proposed Entrance & Sidewalk	Adjust with ADA compliant lid (By Contractor)
Rt. Sta. 434+34 (offset=20')		Manhole No. 41	Resurfacing	Adjust (By Contractor)
Rt. Sta. 436+43 (offset=41')		Manhole No. 43		Adjust (By Contractor)

NOTES:

- ADJUSTMENT OF WATER VALVES, CURB BOXES, AND SANITARY MANHOLES SHALL BE INCLUDED IN THE CONTRACT. WORK SHALL BE PERFORMED BY THE CONTRACTOR.
- PLEASE CHECK ALL YOUR FACILITIES WITHIN THE CONSTRUCTION LIMITS OF THIS PROJECT.

1. PAVEMENT REMOVAL, FULL DEPTH PAVEMENT PATCHING, PROPOSED WIDENING, PROPOSED CURB AND GUTTER, AND ADA RAMP.
2. PROPOSED DRAINAGE STRUCTURES (CULVERS, STORM SEWER, INLETS, MANHOLES)

STATUS OF UTILITIES

Company & Location Note: Stationing & Offsets are approximent unless provided by company	Min. Depth	Type of Utility	Type of conflict	Dispostion
WINDSTREAM				
Rt. Sta. 412+72 (SW Quadrant - West Street)	18"	Handhole and/or markers	Proposed curb with new radius	Relocate (Company to verify ownership)
IL 9 crossing at West Street		Buried Fiber	See Note 1 & 2	Caution (Company to verify ownership)
Lt. Sta. (NW quadrant of West Street)			Proposed curb with new radius	
IL 9 crossing at Sampson Street			See Note 1 & 2	
SE quadrant (Sampson Street)		Handhole and/or markers	See Note 1	Relocate (Company to verify ownership)
Rt. Sta. 412+75 to 434+50		Buried Fiber	See Note 1 & 2	Relocate
Rt. Sta. 417+26 (SW Quadrant- Locust Street)		Handhole and/or markers	Proposed ADA Ramp	Relocate (Company to verify ownership)
METRO COMM				
LT. Sta. 425+60 to 438+46.5 (37' to 40' north from center of IL 9)	42"	Buried Fiber	See Note 1 & 2	Caution
IL 9 crossing at 425+60	60"			Caution
I-3 BROADBAND				
Sta. 379+33.28	36"	Buried Fiber	Proposed Cross Road Culverts	Caution
IL 9 crossing at 373+90			See Note 1 & 2	Caution (Company to verify ownership)
IL 9 crossing at 376+70				
IL 9 crossing at Rt 383+00				Conflict
IL 9 crossing at 386+95				Caution
IL 9 crossing at 389+50				
Rt. Sta. 392+70 to 393+10			Proposed Storm Sewer	Relocate
IL 9 crossing at 397+43			See Note 1 & 2	
Rt. Sta. 398+75 to 399+25			Proposed Storm Sewer	
Rt. Sta. 399+00 to 403+50				Caution
Rt. Sta. 403+59.61			Proposed Tiber Creek Culvert	**Company needs to verify depth and offset under culvert to verify not in conflict**
Rt. Sta. 403+50 to 405+00			Grading & Shaping	Relocate
IL 9 crossing at 413+27 at West St.			See Note 1 & 2	Caution
Rt. Sta. 413+50 (SE Quadrant- West Street)		Handhole and/or markers	Proposed Inlet in grass	Relocate (Company to verify ownership)
Rt. Sta. 417+26 (SW Quadrant- Locust Street)		Handhole and/or markers	Proposed ADA Ramp	

NOTES:

- ADJUSTMENT OF WATER VALVES, CURB BOXES, AND SANITARY MANHOLES SHALL BE INCLUDED IN THE CONTRACT. WORK SHALL BE PERFORMED BY THE CONTRACTOR.
- PLEASE CHECK ALL YOUR FACILITIES WITHIN THE CONSTRUCTION LIMITS OF THIS PROJECT.

1. PAVEMENT REMOVAL, FULL DEPTH PAVEMENT PATCHING, PROPOSED WIDENING, PROPOSED CURB AND GUTTER, AND ADA RAMP.
2. PROPOSED DRAINAGE STRUCTURES (CULVERS, STORM SEWER, INLETS, MANHOLES)

	CODE NO.	ITEM	UNIT	TOTAL QUANTITY	CONSTRUCTION CODE TAZEWELL COUNTY 80% FED/20% STATE ROADWAY 0004 RURAL	TAZEWELL COUNTY 80% FED/20% STATE BOX CULVERT 0004 S.N. 090-2507	TAZEWELL COUNTY 80/10/10 TRAFFIC SIGNALS 0021 RURAL	TAZEWELL COUNTY 80% FED/20% STATE NONE 0044 RURAL
	20100110	TREE REMOVAL (6 TO 15 UNITS DIAMETER)	UNIT	38	38			
	20100210	TREE REMOVAL (OVER 15 UNITS DIAMETER)	UNIT	257	257			
	20100500	TREE REMOVAL, ACRES	ACRE	0.5	0.5			
*	20101400	NITROGEN FERTILIZER NUTRIENT	POUND	600	600			
*	20101500	PHOSPHORUS FERTILIZER NUTRIENT	POUND	600	600			
*	20101600	POTASSIUM FERTILIZER NUTRIENT	POUND	600	600			
	20200100	EARTH EXCAVATION	CU YD	8040	8040			
	20400800	FURNISHED EXCAVATION	CU YD	1730	1730			
	20700220	POROUS GRANULAR EMBANKMENT	CU YD	148		148		
	20800150	TRENCH BACKFILL	CU YD	645	645			
	21001000	GEOTECHNICAL FABRIC FOR GROUND STABILIZATION	SQ YD	143		143		
*	21101615	TOPSOIL FURNISH AND PLACE, 4"	SQ YD	12655	12655			
*	25000100	SEEDING, CLASS 1	ACRE	5.25	5.25			
*	25000300	SEEDING, CLASS 3	ACRE	1	1			

*= SPECIALTY ITEM

	CODE NO.	ITEM	UNIT	TOTAL QUANTITY	CONSTRUCTION CODE TAZEWELL COUNTY 80% FED/20% STATE ROADWAY 0004 RURAL	TAZEWELL COUNTY 80% FED/20% STATE BOX CULVERT 0004 S.N. 090-2507	TAZEWELL COUNTY 80/10/10 TRAFFIC SIGNALS 0021 RURAL	TAZEWELL COUNTY 80% FED/20% STATE NONE 0044 RURAL
**	25000750	MOWING	ACRE	3.75	3.75			
*	25100115	MULCH, METHOD 2	ACRE	5.25	5.25			
	25100635	HEAVY DUTY EROSION CONTROL BLANKET	SQ YD	5057	5057			
*	25200110	SODDING, SALT TOLERANT	SQ YD	3367	3367			
*	25200200	SUPPLEMENTAL WATERING	UNIT	14.7	14.7			
*	28000250	TEMPORARY EROSION CONTROL SEEDING	POUND	10	10			
	28000305	TEMPORARY DITCH CHECKS	FOOT	570	570			
	28000315	AGGREGATE DITCH CHECKS	TON	24	24			
	28000400	PERIMETER EROSION BARRIER	FOOT	3477	3477			
	28000500	INLET AND PIPE PROTECTION	EACH	61	61			
	28001100	TEMPORARY EROSION CONTROL BLANKET	SQ YD	220	220			
	28100209	STONE RIPRAP, CLASS A5	TON	261	261			
	28100225	STONE RIPRAP, CLASS B3	TON	90	90			
	28200200	FILTER FABRIC	SQ YD	284	284			

**100% STATE

CODE NO.	ITEM	UNIT	TOTAL QUANTITY	CONSTRUCTION CODE TAZEWELL COUNTY 80% FED/20% STATE ROADWAY 0004 RURAL	TAZEWELL COUNTY 80% FED/20% STATE BOX CULVERT 0004 S.N. 090-2507	TAZEWELL COUNTY 80/10/10 TRAFFIC SIGNALS 0021 RURAL	TAZEWELL COUNTY 80% FED/20% STATE NONE 0044 RURAL
30300001	AGGREGATE SUBGRADE IMPROVEMENT	CU YD	847	847			
30300112	AGGREGATE SUBGRADE IMPROVEMENT 12"	SQ YD	11061	11061			
31100300	SUBBASE GRANULAR MATERIAL, TYPE A 4"	SQ YD	667	667			
31100500	SUBBASE GRANULAR MATERIAL, TYPE A 6"	SQ YD	237	237			
31101200	SUBBASE GRANULAR MATERIAL, TYPE B 4"	SQ YD	4068	4068			
35501317	HOT-MIX ASPHALT BASE COURSE, 8 1/4"	SQ YD	3613	3613			
35501323	HOT-MIX ASPHALT BASE COURSE, 9 3/4"	SQ YD	4686	4686			
35501328	HOT-MIX ASPHALT BASE COURSE, 11"	SQ YD	6032	6032			
35600709	HOT-MIX ASPHALT BASE COURSE WIDENING, 8 1/4"	SQ YD	27	27			
35600720	HOT-MIX ASPHALT BASE COURSE WIDENING, 11"	SQ YD	122	122			
40200500	AGGREGATE SURFACE COURSE, TYPE A 6"	SQ YD	72	72			
40200700	AGGREGATE SURFACE COURSE, TYPE A 8"	SQ YD	345	345			
40201000	AGGREGATE FOR TEMPORARY ACCESS	TON	752	752			
40600295	POLYMERISZED BITUMINOUS MATERIALS (TACK COAT)	TON	41,714	41,714			

CODE NO.	ITEM	UNIT	TOTAL QUANTITY	CONSTRUCTION CODE TAZEWELL COUNTY 80% FED/20% STATE ROADWAY 0004 RURAL	TAZEWELL COUNTY 80% FED/20% STATE BOX CULVERT 0004 S.N. 090-2507	TAZEWELL COUNTY 80/10/10 TRAFFIC SIGNALS 0021 RURAL	TAZEWELL COUNTY 80% FED/20% STATE NONE 0044 RURAL
40600405	MATERIAL TRANSFER DEVICE	TON	7953	7953			
40600982	HOT-MIX ASPHALT SURFACE REMOVAL - BUTT JOINT	SQ YD	7132	7132			
40600990	TEMPORARY RAMP	SQ YD	404	404			
40602978	HOT-MIX ASPHALT BINDER COURSE, IL- 9.5, N50	TON	60	60			
40603080	HOT-MIX ASPHALT BINDER COURSE, IL-19.0, N50	TON	1341	1341			
40603200	POLYMERIZED HOT-MIX ASPHALT BINDER COURSE, IL-4.75, N50	TON	1227	1227			
40604170	POLYMERIZED HOT-MIX ASPHALT SURFACE COURSE, IL-9.5, MIX "E", N50	TON	3384	3384			
40800050	INCIDENTAL HOT-MIX ASPHALT SURFACING	TON	274	274			
42000201	PORTLAND CEMENT CONCRETE PAVEMENT 7" (JOINTED)	SQ YD	581	581			
42300200	PORTLAND CEMENT CONCRETE DRIVEWAY PAVEMENT, 6 INCH	SQ YD	147	147			
42300300	PORTLAND CEMENT CONCRETE DRIVEWAY PAVEMENT, 7 INCH	SQ YD	2140	2140			
42400100	PORTLAND CEMENT CONCRETE SIDEWALK 4 INCH	SQ FT	17098	17098			
42400300	PORTLAND CEMENT CONCRETE SIDEWALK 6 INCH	SQ FT	480	480			
44000100	PAVEMENT REMOVAL	SQ YD	6963	6963			

CODE NO.	ITEM	UNIT	TOTAL QUANTITY	CONSTRUCTION CODE TAZEWELL COUNTY 80% FED/20% STATE ROADWAY 0004 RURAL	TAZEWELL COUNTY 80% FED/20% STATE BOX CULVERT 0004 S.N. 090-2507	TAZEWELL COUNTY 80/10/10 TRAFFIC SIGNALS 0021 RURAL	TAZEWELL COUNTY 80% FED/20% STATE NONE 0044 RURAL
44000154	HOT-MIX ASPHALT SURFACE REMOVAL, 1 1/4"	SQ YD	8638	8638			
44000157	HOT-MIX ASPHALT SURFACE REMOVAL, 2"	SQ YD	5062	5062			
44000200	DRIVEWAY PAVEMENT REMOVAL	SQ YD	3960	3960			
44000300	CURB REMOVAL	FOOT	464	464			
44000400	GUTTER REMOVAL	FOOT	90	90			
44000500	COMBINATION CURB AND GUTTER REMOVAL	FOOT	3904	3904			
44000600	SIDEWALK REMOVAL	SQ FT	5951	5951			
44004250	PAVED SHOULDER REMOVAL	SQ YD	1108	1108			
44201789	CLASS D PATCHES, TYPE II, 12 INCH	SQ YD	11	11			
44201796	CLASS D PATCHES, TYPE IV, 12 INCH	SQ YD	101	101			
44201823	CLASS D PATCHES, TYPE I, 15 INCH	SQ YD	6	6			
44201827	CLASS D PATCHES, TYPE II, 15 INCH	SQ YD	297	297			
44201831	CLASS D PATCHES, TYPE III, 15 INCH	SQ YD	172	172			
44201833	CLASS D PATCHES, TYPE IV, 15 INCH	SQ YD	1711	1711			

CODE NO.	ITEM	UNIT	TOTAL QUANTITY	CONSTRUCTION CODE TAZEWELL COUNTY 80% FED/20% STATE ROADWAY 0004 RURAL	TAZEWELL COUNTY 80% FED/20% STATE BOX CULVERT 0004 S.N. 090-2507	TAZEWELL COUNTY 80/10/10 TRAFFIC SIGNALS 0021 RURAL	TAZEWELL COUNTY 80% FED/20% STATE NONE 0044 RURAL
48101200	AGGREGATE SHOULDERS, TYPE B	TON	553	553			
48203029	HOT-MIX ASPHALT SHOULDERS, 8"	SQ YD	4255	4255			
50100100	REMOVAL OF EXISTING STRUCTURES	EACH	1		1		
50102400	CONCRETE REMOVAL	CU YD	1.7	1.7			
50104400	CONCRETE HEADWALL REMOVAL	EACH	1	1			
50105220	PIPE CULVERT REMOVAL	FOOT	1251	1251			
50200100	STRUCTURE EXCAVATION	CU YD	670	474	196		
50200450	REMOVAL AND DISPOSAL OF UNSUITABLE MATERIAL FOR STRUCTURES	CU YD	98		98		
50300225	CONCRETE STRUCTURES	CU YD	281	281			
50800105	REINFORCEMENT BARS	POUND	24	24			
50800205	REINFORCEMENT BARS, EPOXY COATED	POUND	37397	20472	16925		
50800515	BAR SPLICERS	EACH	46		46		
50901760	PIPE HANDRAIL	FOOT	711	711			
51500100	NAME PLATES	EACH	1		1		
52200020	TEMPORARY SOIL RETENTION SYSTEM	SQ FT	50		50		

CODE NO.	ITEM	UNIT	TOTAL QUANTITY	CONSTRUCTION CODE TAZEWELL COUNTY 80% FED/20% STATE ROADWAY 0004 RURAL	TAZEWELL COUNTY 80% FED/20% STATE BOX CULVERT 0004 S.N. 090-2507	TAZEWELL COUNTY 80/10/10 TRAFFIC SIGNALS 0021 RURAL	TAZEWELL COUNTY 80% FED/20% STATE NONE 0044 RURAL
54002020	EXPANSION BOLTS 3/4 INCH	EACH	8	8			
54003000	CONCRETE BOX CULVERTS	CU YD	103.2		103.2		
54010504	PRECAST CONCRETE BOX CULVERTS 5' X 4'	FOOT	17	17			
542A5473	PIPE CULVERTS, CLASS A, TYPE 1 EQUIVALENT ROUND-SIZE 18"	FOOT	55	55			
542A5482	PIPE CULVERTS, CLASS A, TYPE 1 EQUIVALENT ROUND-SIZE 27"	FOOT	110	110			
542D0223	PIPE CULVERTS, CLASS D, TYPE 1 18"	FOOT	92	92			
542D5473	PIPE CULVERTS, CLASS D, TYPE 1 EQUIVALENT ROUND-SIZE 18"	FOOT	560	560			
54214503	PRECAST REINFORCED CONCRETE FLARED END SECTIONS, EQUIVALENT ROUND-SIZE 18"	EACH	2	2			
54214722	PRECAST REINFORCED CONCRETE FLARED END SECTIONS - ELLIPTICAL, EQUIVALENT ROUND-SIZE 27"	EACH	4	4			
54248510	CONCRETE COLLAR	CU YD	3	3			
54262718	METAL FLARED END SECTIONS 18"	EACH	4	4			
54262724	METAL FLARED END SECTIONS 24"	EACH	2	2			
54262818	METAL FLARED END SECTIONS, EQUIVALENT ROUND-SIZE 18"	EACH	18	18			
550A0070	STORM SEWERS, CLASS A, TYPE 1 15"	FOOT	97	97			
550A0090	STORM SEWERS, CLASS A, TYPE 1 18"	FOOT	246	246			

CODE NO.	ITEM	UNIT	TOTAL QUANTITY	CONSTRUCTION CODE TAZEWELL COUNTY 80% FED/20% STATE ROADWAY 0004 RURAL	TAZEWELL COUNTY 80% FED/20% STATE BOX CULVERT 0004 S.N. 090-2507	TAZEWELL COUNTY 80/10/10 TRAFFIC SIGNALS 0021 RURAL	TAZEWELL COUNTY 80% FED/20% STATE NONE 0044 RURAL
550A0360	STORM SEWERS, CLASS A, TYPE 2 15"	FOOT	179	179			
550A0380	STORM SEWERS, CLASS A, TYPE 2 18"	FOOT	831	831			
550A0410	STORM SEWERS, CLASS A, TYPE 2 24"	FOOT	206	206			
55100500	STORM SEWER REMOVAL 12"	FOOT	141	141			
55100700	STORM SEWER REMOVAL 15"	FOOT	99	99			
59100100	GEOCOMPOSITE WALL DRAIN	SQ YD	143		143		
60221100	MANHOLES, TYPE A, 5'-DIAMETER, TYPE 1 FRAME, CLOSED LID	EACH	1	1			
60221000	MANHOLES, TYPE A, 5'-DIAMETER, TYPE 1 FRAME, OPEN LID	EACH	3	3			
60235300	INLETS, TYPE A, TYPE 1 FRAME, CLOSED LID	EACH	3	3			
60236200	INLETS, TYPE A, TYPE 8 GRATE	EACH	5	5			
60255500	MANHOLES TO BE ADJUSTED	EACH	5	5			
60257900	MANHOLES TO BE RECONSTRUCTED	EACH	8	8			
60500040	REMOVING MANHOLES	EACH	7	7			
60500060	REMOVING INLETS	EACH	7	7			

	CODE NO.	ITEM	UNIT	TOTAL QUANTITY	CONSTRUCTION CODE TAZEWELL COUNTY 80% FED/20% STATE ROADWAY 0004 RURAL	TAZEWELL COUNTY 80% FED/20% STATE BOX CULVERT 0004 S.N. 090-2507	TAZEWELL COUNTY 80/10/10 TRAFFIC SIGNALS 0021 RURAL	TAZEWELL COUNTY 80% FED/20% STATE NONE 0044 RURAL
	60600095	CLASS SI CONCRETE (OUTLET)	CU YD	7.5	7.5			
	60605000	COMBINATION CONCRETE CURB AND GUTTER, TYPE B-6.24	FOOT	6067	6067			
	60605500	COMBINATION CONCRETE CURB AND GUTTER, TYPE B-6.24 (VARIABLE WIDTH GUTTER FLAG)	FOOT	5B7	5B7			
	60920006	PIPE CULVERTS TO BE CLEANED 6"	FOOT	64	64			
	60920012	PIPE CULVERTS TO BE CLEANED 12"	FOOT	36	36			
	66600105	FURNISHING AND ERECTING RIGHT OF WAY MARKERS	EACH	16	16			
*	66900200	NON-SPECIAL WASTE DISPOSAL	CU YD	285	285			
*	66900530	SOIL DISPOSAL ANALYSIS	EACH	3	3			
*	66901001	REGULATED SUBSTANCES PRE-CONSTRUCTION PLAN	L SUM	1	1			
*	66901003	REGULATED SUBSTANCES FINAL CONSTRUCTION REPORT	L SUM	1	1			
*	66901006	REGULATED SUBSTANCES MONITORING	CAL DA	17	17			
	67000400	ENGINEER'S FIELD OFFICE, TYPE A	CAL MO	19	19			
	67100100	MOBILIZATION	L SUM	1	1			
	70100405	TRAFFIC CONTROL AND PROTECTION, STANDARD 701321	EACH	2	2			

*= SPECIALTY ITEM

CODE NO.	ITEM	UNIT	TOTAL QUANTITY	CONSTRUCTION CODE TAZEWELL COUNTY 80% FED/20% STATE ROADWAY 0004 RURAL	TAZEWELL COUNTY 80% FED/20% STATE BOX CULVERT 0004 S.N. 090-2507	TAZEWELL COUNTY 80/10/10 TRAFFIC SIGNALS 0021 RURAL	TAZEWELL COUNTY 80% FED/20% STATE NONE 0044 RURAL
70100450	TRAFFIC CONTROL AND PROTECTION, STANDARD 701201	L SUM	1	1			
70100455	TRAFFIC CONTROL AND PROTECTION, STANDARD 701206	L SUM	1	1			
70100460	TRAFFIC CONTROL AND PROTECTION, STANDARD 701306	L SUM	1	1			
70100500	TRAFFIC CONTROL AND PROTECTION, STANDARD 701326	L SUM	1	1			
70100600	TRAFFIC CONTROL AND PROTECTION, STANDARD 701336	L SUM	1	1			
70102620	TRAFFIC CONTROL AND PROTECTION, STANDARD 701501	L SUM	1	1			
70102622	TRAFFIC CONTROL AND PROTECTION, STANDARD 701502	L SUM	1	1			
70102635	TRAFFIC CONTROL AND PROTECTION, STANDARD 701701	L SUM	1	1			
70102640	TRAFFIC CONTROL AND PROTECTION, STANDARD 701801	L SUM	1	1			
70103815	TRAFFIC CONTROL SURVEILLANCE	CAL DA	5	5			
70106500	TEMPORARY BRIDGE TRAFFIC SIGNALS	EACH	2	2			
70106700	TEMPORARY RUMBLE STRIPS	EACH	9	9			
70107006	PAVEMENT MARKING BLACKOUT TAPE, 6"	FOOT	684	684			
70107025	CHANGEABLE MESSAGE SIGN	CAL DA	14	14			

CODE NO.	ITEM	UNIT	TOTAL QUANTITY	CONSTRUCTION CODE TAZEWELL COUNTY 80% FED/20% STATE ROADWAY 0004 RURAL	TAZEWELL COUNTY 80% FED/20% STATE BOX CULVERT 0004 S.N. 090-2507	TAZEWELL COUNTY 80/10/10 TRAFFIC SIGNALS 0021 RURAL	TAZEWELL COUNTY 80% FED/20% STATE NONE 0044 RURAL
70300100	SHORT TERM PAVEMENT MARKING	FOOT	3478	3478			
70300150	SHORT TERM PAVEMENT MARKING REMOVAL	SQ FT	1898	1898			
70300221	TEMPORARY PAVEMENT MARKING - LINE 4"- PAINT	FOOT	68858	68858			
70300241	TEMPORARY PAVEMENT MARKING - LINE 6"- PAINT	FOOT	13820	13820			
70300251	TEMPORARY PAVEMENT MARKING - LINE 8"- PAINT	FOOT	109	109			
70300261	TEMPORARY PAVEMENT MARKING - LINE 12"- PAINT	FOOT	307	307			
70300281	TEMPORARY PAVEMENT MARKING - LINE 24"- PAINT	FOOT	627	627			
70307120	TEMPORARY PAVEMENT MARKING - LINE 4" - TYPE IV TAPE	FOOT	2217	2217			
70400100	TEMPORARY CONCRETE BARRIER	FOOT	775	775			
70400125	PINNING TEMPORARY CONCRETE BARRIER	EACH	60	60			
70400200	RELOCATE TEMPORARY CONCRETE BARRIER	FOOT	650	650			
70500100	TEMPORARY STEEL PLATE BEAM GUARDRAIL, TYPE A	FOOT	150	150			
70500615	TEMPORARY TRAFFIC BARRIER TERMINAL, TYPE 1	EACH	2	2			
70600250	IMPACT ATTENUATORS, TEMPORARY (NON- REDIRECTIVE), TEST LEVEL 3	EACH	4	4			

	CODE NO.	ITEM	UNIT	TOTAL QUANTITY	CONSTRUCTION CODE TAZEWELL COUNTY 80% FED/20% STATE ROADWAY 0004 RURAL	TAZEWELL COUNTY 80% FED/20% STATE BOX CULVERT 0004 S.N. 090-2507	TAZEWELL COUNTY 80/10/10 TRAFFIC SIGNALS 0021 RURAL	TAZEWELL COUNTY 80% FED/20% STATE NONE 0044 RURAL
	70600350	IMPACT ATTENUATORS, RELOCATE (NON- REDIRECTIVE), TEST LEVEL 3	EACH	4	4			
*	72000100	SIGN PANEL - TYPE 1	SQ FT	59	59			
*	72501000	TERMINAL MARKER - DIRECT APPLIED	EACH	2	2			
*	72800100	TELESCOPING STEEL SIGN SUPPORT	FOOT	203.5	203.5			
*	78009000	MODIFIED URETHANE PAVEMENT MARKING - LETTERS AND SYMBOLS	SQ FT	997	997			
*	78009004	MODIFIED URETHANE PAVEMENT MARKING - LINE 4"	FOOT	17595	17595			
*	78009006	MODIFIED URETHANE PAVEMENT MARKING - LINE 6"	FOOT	13820	13820			
*	78009008	MODIFIED URETHANE PAVEMENT MARKING - LINE 8"	FOOT	109	109			
*	78009012	MODIFIED URETHANE PAVEMENT MARKING - LINE 12"	FOOT	307	307			
*	78009024	MODIFIED URETHANE PAVEMENT MARKING - LINE 24"	FOOT	627	627			
*	78011000	GROOVING FOR RECESSED PAVEMENT MARKING, LETTERS AND SYMBOLS	SQ FT	910	910			
*	78011025	GROOVING FOR RECESSED PAVEMENT MARKING 5"	FOOT	17595	17595			
*	78011035	GROOVING FOR RECESSED PAVEMENT MARKING 7"	FOOT	13820	13820			
*	78011045	GROOVING FOR RECESSED PAVEMENT MARKING 9"	FOOT	109	109			

*= SPECIALTY ITEM

	CODE NO.	ITEM	UNIT	TOTAL QUANTITY	CONSTRUCTION CODE TAZEWELL COUNTY 80% FED/20% STATE ROADWAY 0004 RURAL	TAZEWELL COUNTY 80% FED/20% STATE BOX CULVERT 0004 S.N. 090-2507	TAZEWELL COUNTY 80/10/10 TRAFFIC SIGNALS 0021 RURAL	TAZEWELL COUNTY 80% FED/20% STATE NONE 0044 RURAL
*	78011065	GROOVING FOR RECESSED PAVEMENT MARKING 13"	FOOT	307	307			
*	78011125	GROOVING FOR RECESSED PAVEMENT MARKING 25"	FOOT	627	627			
*	78100100	RAISED REFLECTIVE PAVEMENT MARKER	EACH	329	329			
	78300200	RAISED REFLECTIVE PAVEMENT MARKER REMOVAL	EACH	177	177			
	78300201	PAVEMENT MARKING REMOVAL - GRINDING	SQ FT	2748	2748			
*	A2C025G5	TREE, CERCIS CANADENSIS (REDBUD), CONTAINER GROWN, 5-GALLON	EACH	10	10			
*	B20018G5	TREE, SYRINGA RETICULATA (JAPANESE TREE LILAC), CONTAINER GROWN, 5-GALLON	EACH	7	7			
*	B2004712	TREE, MALUS ROYAL RAINDROPS (ROYAL RAINDROPS CRABAPPLE), 2 1/2" CALIPER, TREE FORM, BALLED AND BURLAPPED	EACH	3	3			
*	C2003605	SHRUB, HYDRANGEA QUERCIFOLIA BRENHIL (GATSBY GAL OAKLEAF HYDRANGEA) 3 GALLON CONTAINER	EACH	15	15			
*	C20058G5	SHRUB, RHUS AROMATICA GRO-LOW (GRO-LOW FRAGRANT SUMAC), 5-GALLON	EACH	50	50			
*	C20154G5	SHRUB, JUNIPERUS VIRGINIANA BLUE MOUNTAIN, (BLUE MOUNTAIN JUNIPER), 5-GALLON	EACH	11	11			
*	K0012995	PERENNIAL PLANTS, ORNAMENTAL TYPE, 5-GALLON POT	UNIT	17	17			
*	K0013022	PERENNIAL PLANTS, PRAIRIE TYPE, 2,GALLON POT	UNIT	10	10			
	K1001980	RIVER ROCK, 6"	SQ YD	356	356			

*= SPECIALTY ITEM

	CODE NO.	ITEM	UNIT	TOTAL QUANTITY	CONSTRUCTION CODE TAZEWELL COUNTY 80% FED/20% STATE ROADWAY 0004 RURAL	TAZEWELL COUNTY 80% FED/20% STATE BOX CULVERT 0004 S.N. 090-2507	TAZEWELL COUNTY 80/10/10 TRAFFIC SIGNALS 0021 RURAL	TAZEWELL COUNTY 80% FED/20% STATE NONE 0044 RURAL
*	X0321501	WEED BARRIER FABRIC	SQ YD	356	356			
*	X0323160	VIDEO INSPECTION OF STORM SEWER	FOOT	925	925			
*	X1400326	RECTANGULAR RAPID FLASHING BEACON ASSEMBLY (COMPLETE)	EACH	8			8	
*	X2111212	PLANTING SOIL MIX FURNISH AND PLACE, 12"	SQ YD	356	356			
*	X2600011	REMOVE AND RELOCATE SIGN PANEL	EACH	1	1			
	X4240420	PORTLAND CEMENT CONCRETE SIDEWALK 4 INCH (SPECIAL)	SQ FT	775	775			
	X4240440	PORTLAND CEMENT CONCRETE SIDEWALK 6 INCH (SPECIAL)	SQ FT	3671	3671			
*	X4240800	DETECTABLE WARNINGS (SPECIAL)	SQ FT	192	192			
	X4401198	HOT-MIX ASPHALT SURFACE REMOVAL, VARIABLE DEPTH	SQ YD	1350	1350			
	X4430200	STRIP REFLECTIVE CRACK CONTROL TREATMENT	FOOT	4454	4454			
	X4810100	TEMPORARY SHOULDERS	SQ YD	3199	3199			
	X5400005	BOX CULVERT REMOVAL	FOOT	71	71			
	X5430224	CURED-IN-PLACE PIPE LINER, 24"	FOOT	413	413			
	X5537800	STORM SEWERS TO BE CLEANED 12"	FOOT	312	312			

*= SPECIALTY ITEM

CODE NO.	ITEM	UNIT	TOTAL QUANTITY	CONSTRUCTION CODE TAZEWELL COUNTY 80% FED/20% STATE ROADWAY 0004 RURAL	TAZEWELL COUNTY 80% FED/20% STATE BOX CULVERT 0004 S.N. 090-2507	TAZEWELL COUNTY 80/10/10 TRAFFIC SIGNALS 0021 RURAL	TAZEWELL COUNTY 80% FED/20% STATE NONE 0044 RURAL
X5538000	STORM SEWERS TO BE CLEANED 18"	FOOT	200	200			
X5619210	WATER VALVES TO BE ADJUSTED (SPECIAL)	EACH	5	5			
X5810103	MEMBRANE WATERPROOFING SYSTEM FOR BURIED STRUCTURES	SQ YD	143		143		
X6020082	INLETS, TYPE G-1	EACH	7	7			
X6021065	INLETS, TYPE G-1 (SPECIAL)	EACH	7	7			
X6021824	INLET-MANHOLE, TYPE G-1, 4' DIAMETER (SPECIAL)	EACH	8	8			
X6021825	INLET-MANHOLE, TYPE G-1, 5' DIAMETER (SPECIAL)	EACH	5	5			
X6021828	INLET-MANHOLE, TYPE G-1, 8' DIAMETER (SPECIAL)	EACH	1	1			
X6025600	MANHOLES TO BE ADJUSTED (SPECIAL)	EACH	7	7			
X6025800	MANHOLES TO BE ADJUSTED WITH NEW TYPE 1 FRAME, CLOSED LID (SPECIAL)	EACH	3	3			
X6026057	SANITARY MANHOLES TO BE RECONSTRUCTED WITH NEW TYPE 1 FRAME, CLOSED LID	EACH	4	4			
X6026200	INLETS TO BE ADJUSTED (SPECIAL)	EACH	4	4			
X6028000	MANHOLES TO BE RECONSTRUCTED (SPECIAL)	EACH	1	1			
X6050206	FILLING EXISTING STORM SEWERS	FOOT	165	165			

	CODE NO.	ITEM	UNIT	TOTAL QUANTITY	CONSTRUCTION CODE TAZEWELL COUNTY 80% FED/20% STATE ROADWAY 0004 RURAL	TAZEWELL COUNTY 80% FED/20% STATE BOX CULVERT 0004 S.N. 090-2507	TAZEWELL COUNTY 80/10/10 TRAFFIC SIGNALS 0021 RURAL	TAZEWELL COUNTY 80% FED/20% STATE NONE 0044 RURAL
	X6050208	FILLING EXISTING CULVERTS	CU YD	6.4	6.4			
	X6050212	FILLING EXISTING DRAINAGE STRUCTURES	EACH	1	1			
	X6062700	CONCRETE GUTTER, TYPE A (SPECIAL)	FOOT	90	90			
	X6350204	LINEAR DELINEATOR PANELS, 4 INCH	EACH	4	4			
	X6640618	ORNAMENTAL FENCE	FOOT	80	80			
	X6660410	REMOVE RIGHT-OF-WAY MARKERS	EACH	3	3			
	X7010216	TRAFFIC CONTROL AND PROTECTION, (SPECIAL)	L SUM	1	1			
	X7011800	TRAFFIC CONTROL AND PROTECTION, STANDARD BLR 21	L SUM	1	1			
	XZ013798	CONSTRUCTION STATION LAYOUT	L SUM	1	1			
	Z0001002	GUARDRAIL AGGREGATE EROSION CONTROL	TON	32	32			
	Z0007601	BUILDING REMOVAL NO. 1	L SUM	1				1
	Z0013798	CONSTRUCTION LAYOUT	L SUM	1	1			
*	Z0049801	REMOVAL AND DISPOSAL OF FRIABLE ASBESTOS, BUILDING NO. 1	L SUM	1				1
*	Z0049901	REMOVAL AND DISPOSAL OF NON-FRIABLE ASBESTOS, BUILDING NO. 1	L SUM	1				1

*= SPECIALTY ITEM

	CODE NO.	ITEM	UNIT	TOTAL QUANTITY	CONSTRUCTION CODE TAZEWELL COUNTY 80% FED/20% STATE ROADWAY 0004 RURAL	TAZEWELL COUNTY 80% FED/20% STATE BOX CULVERT 0004 S.N. 090-2507	TAZEWELL COUNTY 80/10/10 TRAFFIC SIGNALS 0021 RURAL	TAZEWELL COUNTY 80% FED/20% STATE NONE 0044 RURAL
*	Z0054500	ROCK FILL	TON	151	0	151		
	Z0056650	STORM SEWERS, TYPE 1, WATER MAIN QUALITY PIPE, 15"	FOOT	59	59			
	Z0056652	STORM SEWERS, TYPE 1, WATER MAIN QUALITY PIPE, 18"	FOOT	179	179			
	Z0056669	STORM SEWERS, TYPE 2, WATER MAIN QUALITY PIPE, 15"	FOOT	185	185			
	Z0056670	STORM SEWERS, TYPE 2, WATER MAIN QUALITY PIPE, 18"	FOOT	123	123			
	Z0056672	STORM SEWERS, TYPE 2, WATER MAIN QUALITY PIPE, 24"	FOOT	719	719			
Ø	Z0076600	TRAINEES	HOUR	2000	2000			
	Z0062456	TEMPORARY PAVEMENT	SQ YD	1914	1914			
Ø	Z0076604	TRAINEES - TRAINING PROGRAM GRADUATE	HOUR	2000	2000			
	Z0073400	TEMPORARY SUPPORT SYSTEM	EACH	1		1		

*= SPECIALTY ITEM Ø 0042

MODEL: Default
FILE NAME: pw:\\ildot-pw.bentley.com:PWIDOT\Documents\IDOT Offices\District 4\Projects\D4 68A65\CADData\CADsheets\D468A65-sht-SQQ.dgn

USER NAME = $USER$	DESIGNED -	REVISED -
	DRAWN -	REVISED -
PLOT SCALE = 1:100	CHECKED -	REVISED -
PLOT DATE = 2/14/2025	DATE -	REVISED -

STATE OF ILLINOIS
DEPARTMENT OF TRANSPORTATION

SUMMARY OF QUANTITIES

SCALE: SHEET 17 OF 17 SHEETS STA. TO STA.

F.A.P. RTE.	SECTION	COUNTY	TOTAL SHEETS	SHEET NO.
693	118RS-8,W-2	TAZEWELL	292	27

CONTRACT NO. 68A65
ILLINOIS FED. AID PROJECT

REV. 3/19/25 REV. 3/6/25 REV. 2/26/25

LOCATION	EARTH EXCAVATION	FURNISHED EXCAVATION	INFORMATION ONLY: EARTH EXCAVATION ADJUST FOR SHRINKAGE	INFORMATION ONLY: EMBANKMENT	INFORMATION ONLY: EARTHWORK BALANCE WASTE (+) OR SHORTAGE (-)	TOPSOIL FURNISH AND PLACE 4"
	CU YD	CU YD	CU YD	CU YD	CU YD	SQ YD
IL 9						
RT						
STA. 367+50.0 TO 412+50.0	3091.0	2106.0	1734.0	3840.0	-2106.0	5445.1
STA. 412+50.0 TO 435+00.0	710.0	-375.2	375.2	0.0	375.2	352.7
LT						
STA. 367+50.0 TO 412+50.0	3749.0		2178.9	1591.0	587.9	6394.8
STA. 412+50.0 TO 435+00.0	488.0		343.9	26.0	317.9	464.4
SUBTOTAL	*8038.0*	*1730.8*	*4632.0*	*5457.0*	*-825.0*	*12657.0*
TOTAL	**8040.0**	**1730.0**				**12655.0**

Cut and Fills were calculated assuming 4" vegetation removal

Non-Special Waste areas were not included in calculation for Furnished Ex.

REGULATED SUBSTANCES SCHEDULE

LOCATION	NON-SPECIAL WASTE DISPOSAL	REGULATED SUBSTANCES PRE-CONSTRUCTION PLAN	REGULATED SUBSTANCES MONITORING	REULATED SUBSTANCES FINAL CONSTRUCTION REPORT	SOIL DISPOSAL ANALYSIS
	CU YD	LSUM	CAL DAY	LSUM	EACH
IL 9					
JOBSITE	285.0	1.0	17.0	1.0	3.0
SUBTOTAL	*285.0*	*1.0*	*17.0*	*1.0*	*3.0*
TOTAL	**285.0**	**1.0**	**17.0**	**1.0**	**3.0**

SEE SPECIAL PROVISIONS FOR LOCATIONS

BUILDING REMOVAL SCHEDULE

LOCATION	BUILDING REMOVAL NO. 1	REMOVAL AND DISPOSAL OF FRIABLE ASBESTOS, BUILDING NO. 1	REMOVAL AND DISPOSAL OF NON-FRIABLE ASBESTOS, BUILDING NO. 1
	LSUM	LSUM	LSUM
IL 9			
504 W. PEARL ST.	1.0	1.0	1.0
TOTAL	**1.0**	**1.0**	**1.0**

PAVEMENT PATCHING SCHEDULE

LOCATION	CLASS D PATCHES, TYPE I, 15 INCH	CLASS D PATCHES, TYPE II, 15 INCH		CLASS D PATCHES, TYPE III, 15 INCH		CLASS D PATCHES, TYPE IV, 15 INCH	
	SQ. YD.	#	SQ. YD.	#	SQ. YD.	#	SQ. YD.
EASTBOUND							
WEST END OF PROJECT							
		0	0.0	0	0.0	4	226.7
WEST ST.							
		5	42.7	0	0.0	0	0.0
SAMPSON ST.							
JAMES ST.							
		3	29.3	0	0.0	1	100.0
HARRIS ST.							
		6	58.7	1	16.0	1	26.7
CHESTNUT ST.							
		1	8.0	1	20.0	0	0.0
EAST END OF PROJECT							
EAST BOUND TOTAL		15	139	2	36	6	353
WESTBOUND							
EAST END OF PROJECT							
CHESTNUT ST.							
		0	0.0	0	0.0	2	53.3
HARRIS ST.							
		3	30.7	0	0.0	1	26.7
JAMES ST.							
SAMPSON ST.							
		2	16.0	0	0.0	0	0.0
LOCUST ST.							
WEST ST.							
		5	42.7	2	40.0	5	380.0
OLD IL 9							
		2	13.3	0	0.0	10	620.0
END OF PROJECT							
WESTBOUND TOTAL		12	103	2	40	18	1080
SUBTOTAL		27.0	241.3	4.0	76.0	24.0	1433.3
SUBTOTAL FROM STORM SEWER SCHEDULE	5.5		19.9		84.9		62.7
WINTER BREAKUP (15%)			36.2		11.4		215.0
PROJECT TOTAL	**6.0**		**297.0**		**172.0**		**1711.0**

TREE REMOVAL SCHEDULE

LOCATION	OFFSET	TREE REMOVAL (6 TO 15 UNITS DIAMETER)	TREE REMOVAL (OVER 15 UNITS DIAMETER)	TREE REMOVAL (ACRES)
		UNIT	UNIT	ACRE
IL 9				
STA. 398+33	86 FT. RIGHT		42.0	
	46 FT. RIGHT		42.0	
STA. 399+12	45 FT. RIGHT		36.0	
STA. 400+59	46 FT. RIGHT		36.0	
LT. STA. 398+00 TO 405+00				0.46
STA. 409+57	54 FT. LEFT		36.0	
STA. 412+30.0	75 FT. LEFT		65.0	
STA. 415+68	32 FT. RIGHT	15.0		
STA. 416+04	32 FT. RIGHT	15.0		
STA. 417+90	45 FT. RIGHT	8.0		
SUBTOTAL		*38.0*	*257.0*	*0.5*
TOTAL		**38.0**	**257.0**	**0.5**

DRAINAGE REMOVAL SCHEDULE									
LOCATION	BOX CULVERT REMOVAL	REMOVING INLETS	REMOVING MANHOLES	STORM SEWER REMOVAL		FILLING EXISTING CULVERTS		FILLING EXISTING STORM SEWERS	FILLING EXISTING DRAINAGE STRUCTURES
				12"	15"	15" CMP	2x2 BOX CULVERT		
	FOOT	EACH	EACH	FOOT	FOOT	CU. YD.	CU. YD.	FOOT	EACH
IL 9									
STA. 379+33	45.0								
STA.392+90.5	26.0						3.6		
RT. STA. 404+86.5			1.0						
RT. STA. 405+65			1.0						
RT. STA. 412+66 TO 413+30						2.8			
RT. STA. 8+97 (WEST ST) TO LT. 413+08								132.0	
LT. STA. 413+08		1.0							
RT. STA. 413+28.5		1.0	1.0		17.5				
RT. STA. 417+16		1.0		20.5					
RT. STA.417+36 TO 417+86		1.0	1.0	51.0					
STA. 417+86				69.0					
STA. 421+95									1.0
LT. STA. 424+89			1.0						
LT. STA. 427+20		1.0							
LT.STA. 428+13.0			1.0						
RT. STA. 429+71.6		1.0						33.0	
RT. STA. 430+04.4		1.0							
STA. 428+13			1.0		81.0				
SUBTOTAL	*71.0*	*7.0*	*7.0*	*140.5*	*98.5*	*2.8*	*3.6*	*165.0*	*1.0*
TOTAL	**71.0**	**7.0**	**7.0**	**141.0**	**99.0**	**6.4**		**165.0**	**1.0**

*LENGTHS MEASURED IN CADD

DRAINAGE REMOVAL SCHEDULE			
LOCATION		PIPE CULVERT REMOVAL	CONCRETE HEADWALL REMOVAL
		FOOT	EACH
IL 9			
RT.	Sta. 370+52.20	26.0	
LT.	Sta. 374+31.06	54.0	
RT.	Sta. 375+15.20	50.0	
LT.	Sta. 376+35.90	47.0	
RT.	Sta. 380+00.00	120.0	
RT.	Sta. 383+72.60	89.0	
RT.	Sta. 384+40.00	140.0	
RT.	Sta. 386+07.80	51.0	
LT.	Sta. 386+54.40	63.0	
RT.	Sta. 389+25.00	47.0	
LT.	Sta. 394+00.32	36.0	
RT.	Sta. 394+20.36	40.0	
RT.	Sta. 395+45.02	54.0	
LT.	Sta. 396+42.46	28.0	
RT.	Sta. 397+50.00	54.0	
RT.	Sta. 398+50.00	28.0	
RT.	Sta. 399+84.07	32.0	
RT.	Sta. 400+47.99	30.0	
RT.	Sta. 401+00.00	48.0	
RT.	Sta. 401+95.53	48.0	
RT.	Sta. 405+37.20	75.4	
RT.	Sta. 408+00.00	58.0	
RT.	Sta. 409+95.50		1.0
RT.	Sta. 413+28.00	22.5	
LT.	Sta. 413+04.50	10.0	
SUBTOTAL		*1250.9*	*1.0*
TOTAL		**1251.0**	**1.0**

MAINLINE RESURFACING SCHEDULE

LOCATION				LENGTH	EB & WB LN WIDTH	BI-DIRECTIONAL LANE	HMA SURFACE REMOVAL - BUTT JOINT	HMA SURFACE REMOVAL - 1-1/4"	HMA SURFACE REMOVAL - 2"	HMA SURFACE REMOVAL - VARIABLE DEPTH	PAVEMENT REMOVAL	PAVED SHOULDER REMOVAL	HMA BASE COURSE			AGGREGATE SUBGRADE IMPROVEMENT 12"	AGGREGATE SUBGRADE IMPROVEMENT	POLY. HMA SURFACE COURSE, IL-9.5, MIX "E", N50			POLY. HMA BINDER COURSE, IL-4.75, N50	HMA BINDER COURSE, IL-9.5, N50		HMA BINDER COURSE, IL-19.0, N50			POLY. BIT. MATERIALS (TACK COAT)	MATERIAL TRANSFER DEVICE	STRIP REFLECTIVE CRACK CONTROL TREATMENT*
											HMA		8 1/4"	9 3/4"	11"			1.75"	2"	6" wide joint trim	1"	1.5"	3"	3.75"	7"	11.25"	0.08 LB/SQ FT		
				FOOT	FOOT	FOOT	SQ. YD.	SQ. YD.	SQ. YD.	SQ. YD.	SQ. YD.	SQ. YD.	SQ. YD.	SQ. YD.	SQ. YD.	SQ. YD.	CU. YD.	TON	TON	TON	TON	TON	TON	TON	TON	TON	POUND	TON	FOOT
IL RT. 9																													
STA.	367+88	TO	368+18	30.0	29.8		99.2													0.5							149.7	187.4	30.0
STA.	368+18	TO	370+00	182.0	33.3			455.0				50.6	161.3	173.1		447.4		119.0		3.0	68.0						1011.6	3.0	182.0
STA.	370+00	TO	390+43	2042.7	24.0	13.0		5106.7				567.4	1588.8	1702.3		6241.6		823.0		33.4	470.3						12562.6	1326.6	2042.7
STA.	390+43	TO	391+77	134.7	24.0	13.0		336.7				37.4	104.8	172.1		381.6		60.1		1.5	34.4						818.0	96.0	134.7
STA.	391+77	TO	392+50	72.4	24.0	13.0		181.1				8.0	56.3	92.6		205.2		32.3		0.8	18.5						440.0	51.6	72.4
STA.	392+50	TO	393+28	77.8	24.0	13.0		194.4				21.6	60.5	99.4		220.3		34.7		0.8	19.8						472.3	55.4	77.8
STA.	393+28	TO	399+03	575.4	24.0	13.0		1438.5				159.8	447.5	735.2		1630.3		256.9		6.3	146.8						3494.6	409.9	575.4
STA.	399+03	TO	400+39	135.9	24.0	13.0				339.8		37.8	105.7	173.7		385.1		60.7		1.5	34.7						825.4	96.8	135.9
STA.	400+39	TO	401+17	77.7	24.0	13.0	354.0					21.6	60.4	99.3			88.5	34.7		0.8	19.8			74.3			701.9	129.7	77.7
STA.	401+17	TO	402+16	99.4	24.0	13.0	452.8					27.6	77.3	127.0			126.8	44.4		1.1	25.4				177.5		897.9	248.3	99.4
STA.	402+16	TO	403+71	155.0	24.0	13.0	706.1					43.1	120.6	198.1			212.4	69.2		1.7	39.5					444.9	1400.2	555.3	155.0
STA.	403+71	TO	404+69	98.0	24.0	13.0	446.4					27.2	76.2	125.2			132.8	43.8		1.1	25.0					281.3	885.3	351.1	98.0
STA.	404+69	TO	404+98	29.0	24.0	13.0	132.1					8.1	22.6	37.1			38.8	12.9		0.3	7.4					83.2	262.0	103.9	29.0
STA.	404+98	TO	406+08	110.0	24.0	13.0	501.1					30.6	85.6	140.6			144.2	49.1		1.2	28.1				196.4		993.7	274.8	110.0
STA.	406+08	TO	406+95	87.0	24.0	13.0	396.3					24.2	67.7	111.2			103.4	38.8		0.9	22.2			83.2			785.9	145.2	87.0
STA.	406+95	TO	408+50	155.0	24.0	13.0				387.5		43.1	120.6	198.1		439.2		69.2		1.7	39.5						941.4	110.4	155.0
STA.	408+50	TO	409+00	50.0	24.0	13.0		127.8			28.5		38.9	63.9		141.7		22.3		0.5	12.8						303.7	35.6	50.0
STA.	409+00	TO	412+12	312.0	24.0	13.0		797.3			378.5		381.3	398.7		884.0		152.9		3.4	87.4						1894.9	243.6	312.0
STA.	412+12	TO	412+42	30.0	24.0	12.0	134.8						36.7	38.3		85.0		15.8			8.4						177.4	24.2	30.0
STA.	412+42	TO	424+24	1182.0	24.0	18.0			2364.0						3152.0				617.8								3971.5	617.8	
STA.	424+24	TO	425+58	133.5	24.0	18.0				623.0					356.0				69.8								448.6	69.8	
STA.	425+58	TO	426+29	71.0	24.0	18.0	331.3								189.3				37.1	0.4	18.6						238.6	56.1	
STA.	426+29	TO	426+73	44.5	24.0	18.0	207.7								118.7				23.3	0.3	11.6	7.5					149.5	42.6	
STA.	426+73	TO	427+74	101.0	24.0	18.0	471.3				5971.6				269.3				52.8	0.6	26.4		33.9				339.4	113.7	
STA.	427+74	TO	428+87	113.0	24.0	18.0	527.3								301.3				59.1	0.7	29.5	19.0					379.7	108.3	
STA.	428+87	TO	430+14	127.0	24.0	18.0	592.7								338.7				66.4	0.8	33.2						426.7	100.4	
STA.	430+14	TO	435+04	490.1	24.0	18.0			980.2						1306.9				256.2								1646.7	256.2	
STA. EQN 435+04.09 BK = 434+73.42 AH																													
STA.	434+73.42	TO	438+20	346.6	VARIES	12.0			1718.2										192.4								137.5	192.4	
STA.	438+20	TO	438+30	10.0	VARIES	12.0	52.7												5.9								4.2	5.9	
SUBTOTAL							*5405.9*	*8637.6*	*5062.4*	*1350.3*	*6378.6*	*1107.9*	*3612.7*	*4685.6*	*6032.2*	*11061.4*	*847.0*	*1939.8*	*1380.7*	*63.3*	*1227.1*	*26.5*	*33.9*	*157.6*	*373.9*	*809.3*	*36760.5*	*6012.1*	*4454.0*
SIDE ROAD PAVEMENT TABLE SUBTOTAL							*1725.7*				*583.9*																*1242.5*		
SHOULDER TABLE SUBTOTAL																											*3711.2*	*1940.4*	
TOTAL							**7132.0**	**8638.0**	**5062.4**	**1350.3**	**6963.0**	**1108.0**	**3613.0**	**4686.0**	**6032.0**	**11061.0**	**847.0**		**3384.0**		**1227.0**		**60.0**		**1341.0**		**41714.0**	**7953.0**	**4454.0**

*STRIP CRACK CONTROL ONLY APPLIED TO SOUTH SIDE

MODEL: Default
FILE NAME: pw:\\ildot-pw.bentley.com:PWIDOT\Documents\IDOT Offices\District 4\Projects\D4_68A65\CADData\CADsheets\D468A65-sht-schedule.dgn

USER NAME = $USER$	DESIGNED -	REVISED -	
	DRAWN -	REVISED -	
PLOT SCALE = 1:100	CHECKED -	REVISED -	
PLOT DATE = 3/14/2025	DATE -	REVISED -	

STATE OF ILLINOIS
DEPARTMENT OF TRANSPORTATION

SCHEDULES OF QUANTITIES

SCALE: | SHEET 3 OF 14 SHEETS | STA. TO STA.

F.A.P. RTE.	SECTION	COUNTY	TOTAL SHEETS	SHEET NO.
693	118RS-8.W-2	TAZEWELL	292	30
		CONTRACT NO. 68A65		
	ILLINOIS	FED. AID PROJECT		

SIDE ROAD PAVEMENT SCHEDULE

LOCATION	AREA	HMA SURFACE REMOVAL - BUTT JOINT	PAVMENT REMOVAL	HMA BASE COURSE WIDENING, 8-1/4"	HMA BASE COURSE WIDENING, 11"	POLY. BIT. MATERIALS (TACK COAT)	TEMPORARY RAMP	PCC PAVEMENT 7" (JOINTED)	SUBBASE GRANULAR MATERIAL, TYPE A 4"	INCIDENTAL HMA SURFACING
			PCC			0.08 LB/SQ FT				2" & VARIES
	SQ. FT.	SQ. YD.	SQ. YD.	SQ. YD.	SQ. YD.	POUND	SQ. YD.	SQ. YD.	SQ. YD.	TON
IL RT. 9 SIDE ROADS										
OLD RT. 9										
STA. 8+40.4 TO 9+77.5	3880.8	431.2	75.4	26.7		310.5	51.1			71.5
WEST ST.										
STA. 9+05.9 TO 9+76.9	2716.2	301.8			50.5	217.3	57.8			33.8
STA. 10+23.4 TO 10+73.7	1980.0	220.0			22.3	158.4	55.6			24.6
LOCUST ST.										
STA. 9+20.0 TO 9+79.7	2187.0	243.0			30.8	175.0	54.1			27.2
STA. 10+21.1 TO 10+78.7	2250.0	250.0			3.0	180.0	63.0			28.0
SAMPSON ST.										
STA. 9+71.6 TO 9+79.0	717.3	79.7				57.4	64.4			8.9
STA. 10+21.0 TO 10+71.8	1800.0	200.0			15.8	144.0	57.8			22.4
JAMES ST.										
STA. 9+59.0 TO 9+79.0			118.5					120.0	120.0	
HARRIS ST.										
STA. 9+35.6 TO 9+78.8	1961.1		170.9					217.4	217.4	
STA. 10+21.0 TO 10+81.9	2192.4		219.1					243.6	243.6	
CHESTNUT ST.										
STA. 9+71.6 TO 9+79.0										
SUBTOTAL		*1725.7*	*583.9*	*26.7*	*122.4*	*1242.5*	*403.7*	*581.0*	*581.0*	*216.5*
PROPOSED ENTRANCES TABLE SUBTOTAL										*57.3*
SIDEWALK TABLE SUBTOTAL									*86.0*	
TOTAL		**SEE MAINLINE RESURF SCHEDULE**		**27.0**	**122.0**	**SEE MAINLINE**	**404.0**	**581.0**	**667.0**	**274.0**

SHOULDER SCHEDULE

LOCATION	LENGTH	RT SHLDR WIDTH	LT SHLDR WIDTH	HMA SHOULDERS, 8"	POLY. BIT. MATERIALS (TACK COAT)	MATERIAL TRANSFER DEVICE	AGGREGATE SHOULDERS, TYPE B
					0.08 LB/SQ FT		
	FOOT	FOOT	FOOT	SQ. YD.	POUND	TON	TON
IL 9							
STA. 367+88 TO 368+30	42.0	0.0	0.0	0.0	0.0	0.0	8.5
STA. 368+30 TO 370+00	170.0	0-6.0	0-6.0	113.3	108.8	51.7	34.4
STA. 370+00 TO 370+32	32.0	6.0	6.0	42.7	35.8	19.5	6.5
STA. 370+32 TO 370+71	39.0	8.0	6.0	60.7	49.9	27.7	3.9
STA. 370+71 TO 372+25	154.0	6.0	6.0	205.3	172.5	93.6	31.2
STA. 372+25 TO 372+75	50.0	6.0	8.0	77.8	64.0	35.5	5.1
STA. 372+75 TO 374+06	131.0	6.0	6.0	174.7	146.7	79.6	26.5
STA. 374+06 TO 374+56	50.0	6.0	8.0	77.8	64.0	35.5	5.1
STA. 374+56 TO 374+89	33.0	6.0	6.0	44.0	37.0	20.1	6.7
STA. 374+89 TO 375+41	52.0	8.0	6.0	80.9	66.6	36.9	5.3
STA. 375+41 TO 376+10	69.0	6.0	6.0	92.0	77.3	42.0	14.0
STA. 376+10 TO 376+61	51.0	6.0	8.0	79.3	65.3	36.2	5.2
STA. 376+61 TO 379+55	294.0	6.0	6.0	392.0	329.3	178.8	59.5
STA. 379+55 TO 380+12	57.0	8.0	6.0	88.7	73.0	40.4	5.8
STA. 380+12 TO 381+96	184.0	6.0	6.0	245.3	206.1	111.9	37.3
STA. 381+96 TO 382+93	97.0	6.0	8.0	150.9	124.2	68.8	9.8
STA. 382+93 TO 383+34	41.0	6.0	6.0	54.7	45.9	24.9	8.3
STA. 383+34 TO 384+12	78.0	8.0	6.0	121.3	99.8	55.3	7.9
STA. 384+12 TO 385+80	168.0	6.0	6.0	224.0	188.2	102.1	34.0
STA. 385+80 TO 386+22	42.0	8.0	6.0	65.3	53.8	29.8	4.3
STA. 386+22 TO 386+36	14.0	8.0	8.0	24.9	20.2	11.3	0.0
STA. 386+36 TO 386+83	47.0	6.0	8.0	73.1	60.2	33.3	4.8
STA. 386+83 TO 389+55	272.0	6.0	6.0	362.7	304.6	165.4	55.1
STA. 389+55 TO 390+43	88.0	6.0	8.0	136.9	112.6	62.4	8.9
STA. 390+43 TO 391+77	134.0	6.0	6.0	89.3	85.8	40.7	13.6
STA. 391+77 TO 392+50	73.0	0.0	6.0	48.7	46.7	22.2	7.4
STA. 392+50 TO 393+78	128.0	6.0	6.0	85.3	81.9	38.9	13.0
STA. 393+78 TO 395+81	203.0	6.0	8.0	180.4	162.4	82.3	0.0
STA. 395+81 TO 408+76	1295.0	8.0	6.0	863.3	828.8	393.7	131.1
SUBTOTAL				*4255.3*	*3711.2*	*1940.4*	*552.8*
TOTAL				**4255.0**	**SEE RESURF. SCHEDULE**		**553.0**

SIDEWALK, CC&G, AND ADA RAMP SCHEDULE

LOCATION	SIDEWALK REMOVAL	PCC SIDEWALK 4 INCH	PCC SIDEWALK 4 INCH (SPECIAL)	PCC SIDEWALK 6 INCH	PCC SIDEWALK 6 INCH (SPECIAL)	DETECTABLE WARNINGS (SPECIAL)	COMBINATION CURB AND GUTTER REMOVAL	GUTTER REMOVAL	CONCRETE GUTTER, TYPE A (SPECIAL)	CLASS SI CONCRETE (OUTLET)	CCC&G, TYPE B-6.24	CCC&G, TYPE B-6.24 (VARIABLE WIDTH GUTTER FLAG)	SUBBASE GRANULAR MATERIAL, TYPE B 4"	SUBBASE GRANULAR MATERIAL, TYPE A 4"	ORNAMENTAL FENCE
	SQ. FT.	SQ. FT.	SQ. FT.	SQ. FT.	SQ. FT.	SQ. FT.	FOOT	FOOT	FOOT	CU. YD.	FOOT	FOOT	SQ. YD.	SQ. YD.	FOOT
RT. IL 9															
STA. 390+42.7 TO 391+95.0			611.0			10.0					127.8		43.7		
SW QUAD OLD IL 9										2.4	20.0		6.8		
SE QUAD OLD IL 9								89.9	89.9	2.7	26.1		8.9		
STA. 392+32.0 TO 402+81.0		4300.1				10.0					953.5		326.3		
STA. 402+81.0 TO 403+61.0				480.0							80.0		27.4		80.0
STA. 403+61.0 TO 412+67.3		4195.6					142.2				844.3		288.9		
SW QUAD WEST ST.	210.8	365.8				10.0	56.0					65.0	18.9		
SE QUAD WEST ST.		111.4	163.5			22.8	73.4					62.0	16.9		
STA. 413+62.1 TO 417+15.4	2148.5	1434.4			219.2		254.5				360.4		123.3		
SW QUAD LOCUST ST.		267.3				10.0	65.3					52.4	14.8		
SE QUAD LOCUST ST.		295.3				10.0	79.8					72.0	20.3		
STA. 418+09.3 TO 421+58.3	1565.4	1736.2					300.9				336.0		115.0		
SE QUAD SAMPSON ST.		220.4				10.0	27.4					28.1	8.6		
STA. 422+71.8 TO 425+53.5	1247.3	244.5			1129.2		228.4				266.8		91.3		
SW QUAD JAMES ST.		30.0					36.0					32.3		8.3	
SE QUAD JAMES ST.							17.3					21.5		6.1	
STA. 426+44.2 TO 429+35.1							99.6				273.3		93.5		
SW QUAD HARRIS ST.							64.2					45.8		12.8	
SE QUAD HARRIS ST.	173.1	275.6				15.0	68.2				36.3	14.5		16.5	
STA. 430+38.6 TO 434+08.5		570.5			1169.1		260.3				367.8		125.9		
SW QUAD CHESTNUT	93.1	82.6					30.5					26.2		7.5	
LT. IL 9															
STA. 408+55.4 TO 412+25.6							23.0			2.4	312.6		107.0		
NW QUAD WEST ST.							46.5				54.0		18.5		
NE QUAD WEST ST.							29.1				10.6	40.0	11.3		
STA. 413+23.5 TO 417+09.9		632.7			1153.0	10.0	327.7				360.4		123.3		
NW QUAD LOCUST ST.		68.5				17.4	31.3					25.4	8.2		
NE QUAD LOCUST ST.		75.7				17.0	72.8				29.6	31.2	18.9		
STA. 418+03.4 TO 421+67.2	89.3	1658.6					202.9				363.8		124.5		
NW QUAD SAMPSON ST.	191.7	159.4				20.0	59.9				44.9	10.0	18.3		
NE QUAD SAMPSON ST.	87.3	201.7				20.0	34.2					32.5	9.5		
STA. 422+55.4 TO 429+24.3							668.9				642.8		220.0		
NW QUAD HARRIS ST.							79.3				55.4	18.0		24.1	
NE QUAD HARRIS ST.	144.0	171.7				10.0	46.8				22.4	10.5		10.7	
STA. 430+13.0 TO 435+04.0							477.9				478.0		163.6		
SUBTOTAL	*5950.5*	*17098.0*	*774.5*	*480.0*	*3670.5*	*192.2*	*3904.3*	*89.9*	*89.9*	*7.5*	*6066.8*	*587.4*	*2153.7*	*86.0*	*80.0*
TOTAL	**5951.0**	**17098.0**	**775.0**	**480.0**	**3671.0**	**192.0**	**3904.0**	**90.0**	**90.0**	**7.5**	**6067.0**	**587.0**	**SEE STAGING SCHEDULE**	**SEE HMA SCHEDULE**	**80.0**

PROPOSED ENTRANCES SCHEDULE

LOCATION			TYPE	MATERIAL	AREA	AGGREGATE SURFACE COURSE TYPE A 6"	AGGREGATE SURFACE COURSE TYPE A 8"	PCC DRIVEWAY PAVEMENT, 6"	PCC DRIVEWAY PAVEMENT, 7"	INCIDENTAL HOT-MIX ASPHALT SURFACING 8 INCH	DRIVEWAY PAVEMENT REMOVAL	CURB REMOVAL
					SQ. FT.	SQ. YD.	SQ. YD.	SQ. YD.	SQ. YD.	TON	SQ. YD.	FOOT
IL RT. 9												
RT	STA.	370+52.2	FE	AGG	370.9		41.2				48.1	
LT	STA.	372+50.0	FE	AGG	878.8		97.6					
LT	STA.	374+31.1	CE	CONC	587.3				65.3		117.6	
RT	STA.	375+15.2	CE	CONC	553.6				61.5		126.6	
LT	STA.	376+35.9	CE	CONC	645.9				71.8		127.2	
RT	STA.	379+75.0	CE	AGG	1188.1		68.7		63.3			
LT	STA.	382+44.3	CE	CONC	1046.7				116.3		348.3	
RT	STA.	383+72.6	CE	CONC	938.7				104.3		245.5	
RT	STA.	386+07.8	CE	CONC	579.4				64.4		137.3	
LT	STA.	386+54.4	CE	AGG	740.9		82.3					
RT	STA.	389+27.0	CE	BIT	395.6						44.0	
LT	STA.	389+85.8	CE	CONC	621.2				69.0		181.1	
RT	STA.	390+25.0	CE	BIT	400.5						44.5	
RT	STA.	390+64.2	CE	CONC	818.1				90.9			
LT	STA.	394+00.3	CE	AGG	495.2		55.0				49.8	
RT	STA.	394+20.4	CE	CONC	894.3				99.4		155.9	
RT	STA.	395+45.0	CE	CONC	809.1				89.9		120.2	
LT	STA.	395+51.9	CE	CONC	1133.1				125.9		127.0	
LT	STA.	396+42.0	CE	BIT	440.5						48.9	
RT	STA.	397+50.0	CE	CONC	688.0				76.4		123.3	
RT	STA.	398+50.0	PE	CONC	243.7			27.1			37.8	
				AGG	210.0	23.3						
RT	STA.	399+50	PE	CONC	243.0			27.0				
RT	STA.	399+83.6	PE	CONC	288.7						408.0	
RT	STA.	400+50.0	PE	CONC	188.0			23.2				
				AGG	296.5	32.9						
RT	STA.	401+00.0	FE	CONC	396.0			44.0				
RT	STA.	402+00.0	FE	CONC	1205.4							
RT	STA.	405+37.2	CE	CONC	1081.4				120.2		200.9	
RT	STA.	408+00.0	CE	CONC	746.4				82.9		156.2	
LT	STA.	414+50.0	CE	CONC	1140.2				126.7		135.1	
RT	STA.	414+69.1	CE	CONC	1366.9				151.9	7.6	155.6	43.5
RT	STA.	415+33.5	CE	CONC	939.4				104.4		107.8	44
LT	STA.	419+66.8	CE	CONC	759.2				84.4		66.5	10.5
RT	STA.	419+79.0	CE	CONC	530.8				59.0		77.6	39.5
LT	STA.	419+92.8	PL	CONC	103.8						103.8	89.3
LT	STA.	421+02.0	CE	CONC	344.0				38.2		49.9	22.0
RT	STA.	423+15.7	CE	CONC	296.1				32.9		58.8	
				BIT	530.7					26.4		
RT	STA.	423+53.8	PE	AGG	145.0	16.1						
				CONC	200.0			22.2			15.0	
RT	STA.	424+53.2	PE	CONC	34.2			3.8				
RT	STA.	427+17.3	CE	CONC	342.9				38.1		133.4	127.2
RT	STA.	427+79.4	CE	CONC	330.0				36.7			
RT	STA.	428+56.6	CE	CONC	305.1				33.9			
RT	STA.	432+26.0	CE	CONC	454.7				50.5		63.6	36.7
RT	STA.	433+39.2	CE	CONC	408.3				45.4		54.4	51.0
LOCUST ST.												
LT	STA.	09+49.8	CE	CONC	332.1				36.9		63.2	
				BIT	295.0					14.7		
RT	STA.	10+60.7	CE	BIT	174.6					8.7	27.0	
SUBTOTAL						72.4	344.9	147.3	2140.3	57.3	3959.9	463.7
TOTAL						**72.0**	**345.0**	**147.0**	**2140.0**	**SEE SIDEROAD PVT SCHED.**	**3960.0**	**464.0**

RIPRAP SCHEDULE

LOCATION			WIDTH	LENGTH	AREA	STONE RIPRAP, CLASS B3	STONE RIPRAP CLASS A5	FILTER FABRIC
			FOOT	FOOT	SQ FT	TON	TON	SQ YD
IL 9								
RT.	STA.	374+23.0	5	10	50	1.9		
RT.	STA.	378+00.0	5	10	50	1.9		
LT.	STA.	379+33.0	10	20	200	7.4		
RT.	STA.	379+33.0	8	25	200	7.4		
RT.	STA.	391+91.0	5	5	25	0.9		
RT.	STA.	392+34.0			170	6.3		
LT.	STA.	395+14.0	5	5	25	0.9		
LT. STA. 397+63 TO 397+90					237	8.8		
RT. STA. 402+81 TO 403+61					1481.9	54.9		
					756.5		77.1	84.1
LT. STA. 403+70 TO 404+37					1055.4		107.5	117.3
LT. STA. 408+30 TO 409+00					747.6		76.1	83.1
SUBTOTAL						90.4	260.7	284.4
TOTAL						**90.0**	**261.0**	**284.0**

CROSS ROAD CULVERTS

LOCATION		PIPE CULVERTS, CLASS A, TYPE 1 EQUIVALENT ROUND-SIZE 27"	PRECAST REINFORCED CONCRETE FLARED END SECTIONS-ELLIPTICAL, EQUIVALENT ROUND - SIZE 27"	TRENCH BACKFILL	SUBBASE GRANULAR MATERIAL, TYPE A 6"	CLASS D PATCHES, TYPE II 12"	CLASS D PATCHES, TYPE IV 12"
		FOOT	EACH	CU YD	SQ YD	SQ YD	SQ YD
IL 9							
STA	379+33.28	110.0	4.0	11.2	36.9	11.3	25.6
STA	403+58.00				200.2		75.4
SUB TOTAL		*110.0*	*4.0*	*11.2*	*237.1*	*11.3*	*101.0*
TOTAL		**110.0**	**4.0**	**SEE STORM SEWER SCHEDULE**	**237.0**	**11.0**	**101.0**

ENTRANCE DRAINAGE SCHEDULE

LOCATION			TYPE	PIPE CULVERTS, CLASS D, TYPE I	METAL FLARED END SECTIONS	PIPE CULVERTS, CLASS D, TYPE 1, EQUIV ROUND	METAL FLARED END SECTIONS, EQUIVALENT ROUND-SIZE	PIPE CULVERTS, CLASS A, TYPE 1, EQUIV ROUND	PRECAST REINFORCED CONC FLARED END SECTION EQUIV ROUND
				18"	18"	18"	18"	18"	18"
				FOOT	EACH	FOOT	EACH	FOOT	EACH
IL 9									
RT	STA.	370+52.2	FE			40	2		
LT	STA.	372+50.0	FE			55	2		
LT	STA.	374+31.1	CE	50	2				
RT	STA.	375+15.2	CE			50	2		
LT	STA.	376+35.9	CE			47	2		
RT	STA.	379+83.0	CE					55	2
LT	STA.	382+50.0	CE			100	2		
RT	STA.	383+72.6	CE			85	2		
RT	STA.	386+07.8	CE			51	2		
LT	STA.	386+54.4	CE			62	2		
LT	STA.	394+00.0	CE	42	2				
LT	STA.	395+50.0	CE			70	2		
SUBTOTAL				*92.0*	*4.0*	*560.0*	*18.0*	*55.0*	*2.0*
TOTAL				**92.0**	**4.0**	**560.0**	**18.0**	**55.0**	**2.0**

DRAINAGE STRUCTURE ADJUSTMENT SCHEDULE

LOCATION			PROPOSED LID ELEVATION	OFFSET	INLETS TO BE ADJUSTED (SPECIAL)	MANHOLES TO BE ADJUSTED	MANHOLES TO BE ADJUSTED (SPECIAL)	MANHOLES TO BE ADJUSTED WITH NEW TYPE 1 FRAME, CLOSED LID (SPECIAL)	SANITARY MANHOLES TO BE RECONSTRUCTED WITH NEW TYPE 1 FRAME, CLOSED LID (SPECIAL)	MANHOLES TO BE RECONSTRUCTED	MANHOLES TO BE RECONSTRUCTED (SPECIAL)	WATER VALVES TO BE ADJUSTED (SPECIAL)
STATION				FOOT	EACH	EACH	EACH	EACH	EACH	EACH	EACH	EACH
LT	STA	385+92.5	Match Prop. Shoulder	24		1.0						
LT	STA	389+30.5		24		1.0						
RT	STA	393+38.5	635.89	47.6						1.0		
RT	STA	397+86.1	635.58	31.5					1.0			
RT	STA	401+31.3	635.36	34.1					1.0			
RT	STA	402+81.0	635.75	35.5						1.0		
RT	STA	405+02.1	level 5-cut cross section	37.4						1.0		
RT	STA	407+83.5		39.1						1.0		
RT	STA	411+07.7		40.1						1.0		
RT	STA	415+32.8	641.14	52.0				1.0				
RT	STA	416+86.6	643.02	31.7		1.0						
LT	STA	417+39.2	640.86		1.0							
RT	STA	417+53.3	Match Prop. Roadway					1.0				
LT	STA	417+85.5	Match Prop. Ground							1.0		
RT	STA	419+77.0	642.69	29.0		1.0						
RT	STA	419+78.8	642.78	35.0				1.0				
RT	STA	422+00.0	Match Prop. Roadway	23.0			1.0					
LT	STA	422+28.7		45.6	1.0							
RT	STA	422+58.4	642.28	34.2					1.0			
RT	STA	422+70.5	Match Prop. Ground	29.9		1.0						
RT	STA	425+00.0	645.08	24.4						1.0		
RT	STA	425+70.0	Match Prop. Roadway	22.6			1.0					
RT	STA	425+73.1	644.10	27.8	1.0							
RT	STA	426+24.1	644.43	31.4	1.0							
RT	STA	426+37.9	Match Prop. Roadway	19.1			1.0					
RT	STA	429+62.0		18.0			1.0					
RT	STA	429+67.0	Match Prop. Ground	49.8						1.0		
RT	STA	430+00.0	Match Prop. Roadway	18.0			1.0					
RT	STA	430+06.0		27.6			1.0					
RT	STA	432+23.0	Match Prop. Ground	25.4					1.0			
RT	STA	434+34.0	Match Prop. Roadway	20.0			1.0					
Location determined by Engineer. Extra Quantity											1.0	
TOTAL					**4.0**	**5.0**	**7.0**	**3.0**	**4.0**	**8.0**	**1.0**	**5.0**

LOCATION			INLET & PIPE PROTECTION
IL 9			EACH
RT.	STA.	370+33	1
RT.	STA.	374+90	1
RT.	STA.	379+33	2
RT.	STA.	380+17	1
RT.	STA.	384+15	1
RT.	STA.	386+32	1
RT.	STA.	391+77	1
RT.	STA.	392+90	2
RT.	STA.	395+00	1
RT.	STA.	397+00	1
RT.	STA.	398+00	1
RT.	STA.	399+00	2
RT.	STA.	400+00	1
RT.	STA.	402+50	1
RT.	STA.	404+89	1
RT.	STA.	405+97	1
RT.	STA.	407+51	1
RT.	STA.	409+94	1
RT.	STA.	413+50.8	1
RT.	STA.	417+21.8	1
RT.	STA.	417+36	1
RT.	STA.	417+86	1
RT.	STA.	418+24.8	1
RT.	STA.	424+89.5	1
RT.	STA.	425+73	1
RT.	STA.	426+24	1
RT.	STA.	426+38	1
RT.	STA.	428+13	1
RT.	STA.	429+74	1
RT.	STA.	430+04	1
RT.	STA.	434+34	1
RT.	STA.	434+67.5	1
RT.	STA.	435+16	1
RT.	STA.	437+75	1
LT.	STA.	372+20	1
LT.	STA.	374+00	1
LT.	STA.	376+10	1
LT.	STA.	383+00	1
LT.	STA.	386+89	1
LT.	STA.	393+80	1
LT.	STA.	395+15	1
LT.	STA.	412+19	1
LT.	STA.	413+08	1
LT.	STA.	413+50	1
LT.	STA.	415+00	1
LT.	STA.	415+23	1
LT.	STA.	417+39	1
LT.	STA.	417+74	1
LT.	STA.	422+28	1
LT.	STA.	424+89.5	1
LT.	STA.	427+20	1
LT.	STA.	428+13	1
LT.	STA.	429+90.7	1
LT.	STA.	430+19.5	1
LT.	STA.	435+25	1
LT.	STA.	437+78	1
WEST STREET			
RT.	STA.	9+31	1
LT.	STA.	9+31	1
TOTAL			**61.0**

MODEL: Default
FILE NAME: pw:\\ildot-pw.bentley.com:PWIDOT\Documents\IDOT Offices\District 4\Projects\D4 68A65\CADData\CADsheets\D468A65-lin-schedule.dgn

USER NAME = $USER$	DESIGNED -	REVISED -	**STATE OF ILLINOIS DEPARTMENT OF TRANSPORTATION**
	DRAWN -	REVISED -	
PLOT SCALE = 1:100	CHECKED -	REVISED -	
PLOT DATE = 3/14/2025	DATE -	REVISED -	

SCHEDULES OF QUANTITIES

SCALE: | SHEET 7 OF 14 SHEETS | STA. TO STA.

F.A.P. RTE.	SECTION	COUNTY	TOTAL SHEETS	SHEET NO.
693	118RS-8.W-2	TAZEWELL	292	34
		CONTRACT NO. 68A65		
		ILLINOIS FED. AID PROJECT		

STORM SEWER SCHEDULE

LOCATION			PIPE CULVERTS TO BE CLEANED		STORM SEWERS TO BE CLEANED		VIDEO INSPECTION OF STORM SEWER	CURED IN PLACE PIPE LINER, 24"	STORM SEWERS, CLASS A		STORM SEWERS, CLASS A			STORM SEWERS, WATER MAIN QUALITY PIPE		STORM SEWERS, WATER MAIN QUALITY PIPE			TRENCH BACKFILL	CLASS D PATCHES, 15"				METAL FLARED END SECTION 24"
									TYPE 1		TYPE 2			TYPE 1		TYPE 2				TYPE I	TYPE II	TYPE III	TYPE IV	
STRUTURE	TO	STRUCTURE	6"	12"	12"	18"			15"	18"	15"	18"	24"	15"	18"	15"	18"	24"						
			FOOT	FOOT	FOOT	FOOT	FOOT	FOOT	FOOT	FOOT	FOOT	FOOT	FOOT	FOOT	FOOT	FOOT	FOOT	FOOT	CU YD	SQ YD	SQ YD	SQ YD	SQ YD	EACH
1	TO	2									115.5								23.3			16.9		
3	TO	2														37.0			9					
2	TO	4										211.5							140.8					
4	TO	5										202.0							62					
5	TO	8																202.0	32.4					
6	TO	7														102.0								
7	TO	8														20.5			5.8					
8	TO	9																102	20.9					
9	TO	10																252	70.3					
10	TO	CREEK																40.5	3.1					1
CREEK	TO	11											97.5						11.8					1
11	TO	12										110.0							17.1					
13	TO	12									23.5								2.7					
12	TO	14										156.0							16.4					
15	TO	14									19.5								1.1					
14	TO	16								245.5									25.8					
17	TO	16									20								1.1					
WEST STREET INTERSECTION																								
RT. 413+60			64																					
18	TO	19													31				7.2		9.6			
20	TO	19																34	7.0					
21	TO	19														25			5.9					
19	TO	23																88.5	18.1				35.2	
26	TO	25							28										6.6					
25	TO	24													147.5				34.1					
24	TO	23										42.0							9.7					
23	TO	22											87.0						17.8				27.4	
22		FLUME											21.5						0.6					
MH @ LT. 417+85.5	TO	28			120		120																	
28	TO	20					413	413																
20	TO	FLUME			192		192																	
LOCUST STREET INTSECTION																								
28	TO	27												15.0					3.5	2.5				
29	TO	28															51.5		11.9			17.1		
30	TO	29							39										9.2	3.0				
29	TO	MH @ LT. 417+85.5															71.0		16.4			19.2		
RT. STA. 417+86				36																				
32	TO	33										62							14.3			15.9		
34	TO	35										47							10.9			15.9		
38	TO	34				200	200																	
HARRIS STREET INTSECTION																								
MH @ RT 429+67	TO	37												5.0					1.2					
38	TO	37												38.5					9.1		10.3			
39	TO	40							30										7.1					
SUBTOTAL			*64.00*	*36.00*	*312.00*	*200.00*	*925.00*	*413.00*	*97.00*	*245.50*	*178.50*	*830.50*	*206.00*	*58.50*	*178.50*	*184.50*	*122.50*	*719.00*	*634.20*	*5.49*	*19.91*	*84.91*	*62.67*	*2.00*
TOTAL FROM CROSS ROAD CULVERTS																			*11.17*					
TOTAL			**64.0**	**36.0**	**312.0**	**200.0**	**925.0**	**413.0**	**97.0**	**246.0**	**179.0**	**831.0**	**206.0**	**59.0**	**179.0**	**185.0**	**123.0**	**719.0**	**645.0**	**SEE PAVT PATCHING SCHEDULE**				**2.0**

MODEL: Default
FILE NAME: pw:\\ildot-pw.bentley.com:PWIDOT\Documents\IDOT Offices\District 4\Projects\D4_68A65\CAD\Data\CADsheets\D468A65-sht-schedule.dgn

USER NAME = $USER$	DESIGNED -	REVISED -	
	DRAWN -	REVISED -	
PLOT SCALE = 1:100	CHECKED -	REVISED -	
PLOT DATE = 3/14/2025	DATE -	REVISED -	

STATE OF ILLINOIS
DEPARTMENT OF TRANSPORTATION

SCHEDULES OF QUANTITIES

SCALE: | SHEET 8 OF 14 SHEETS | STA. | TO STA.

F.A.P. RTE.	SECTION	COUNTY	TOTAL SHEETS	SHEET NO.
693	118RS-8.W-2	TAZEWELL	292	35
		CONTRACT NO. 68A65		
	ILLINOIS	FED. AID PROJECT		

DRAINAGE STRUCTURE SCHEDULE

LOCATION				PROPOSED OFFSET TO CONTROL POINT OR TOP OF BOX	PROPOSED ELEVATION AT CONTROL POINT OR TOP OF BOX	M.H. TYPE A, 5' DIAMETER	M.H. TYPE A, 5' DIAMETER	INLET-MANHOLE, TYPE G-1 (SPECIAL)			INLETS, TYPE A		INLETS	
						TYPE 1 FRAME	TYPE 1 FRAME	4' DIA	5' DIA	8' DIA	TYPE 1 FRAME	TYPE 8 GRATE	TYPE G-1	TYPE G-1 SPECIAL
						CLOSED LID	OPEN LID	TYPE 1 FRAME	TYPE 1 FRAME	TYPE 1 FRAME	CLOSED LID			
STRUCTURE #	STATION			FOOT		EACH	EACH	EACH	EACH	EACH	EACH	EACH	EACH	EACH
IL 9 (PEARL STREET)														
1	RT	STA	391+77.0	22.5	639.27									1.0
2	RT	STA	392+90.5	22.5	638.38			1.0						
3	RT	STA	392+90.5	56.4	634.00							1.0		
4	RT	STA	395+00.0	22.5	636.97									1.0
5	RT	STA	397+00.0	22.5	635.59			1.0						
6	RT	STA	398+00.0	45.4	633.40							1.0		
7	RT	STA	399+00.0	43.7	633.54							1.0		
8	RT	STA	399+00.0	22.5	634.73			1.0						
9	RT	STA	400+00.0	22.5	634.51			1.0						
10	RT	STA	402+50.0	22.5	635.18				1.0					
11	RT	STA	404+89.3	22.5	635.06				1.0					
12	RT	STA	405+97.2	22.5	634.74			1.0						
13	RT	STA	405+97.2	50.3	635.85						1.0			
14	RT	STA	407+51.2	22.5	634.58			1.0						
15	RT	STA	407+51.3	45.9	635.83						1.0			
16	RT	STA	409+94.7	22.5	635.70			1.0						
17	RT	STA	409+94.7	40.9	636.25						1.0			
WEST STREET INTERSECTION														
18	WEST STREET STA. LT. STA. 9+31			11	639.04								1.0	
19	WEST STREET STA. RT. STA. 9+31			16.6	638.92				1.0					
20	WEST STREET STA. RT. STA. 8+97			23.9	Match Roadway	1.0								
21	RT	STA	413+50.00	46.3	638.12							1.0		
22	LT	STA	412+19.0	22.5	637.48				1.0					
23	LT	STA	413+08.2	26.1	637.79				1.0					
24	LT	STA	413+50.0	21.0	638.25									1.0
25	LT	STA	415+00.0	21.0	639.37									1.0
26	LT	STA	415+23.1	35.5	639.68							1.0		
LOCUST STREET INTSECTION														
27	RT	STA	417+21.8	21.0	641.95								1.0	
28	RT	STA	417+36.30	23.4	Match Roadway		1.0							
29	RT	STA	417+86.60	22.3	Match Roadway		1.0							
30	RT	STA	418+24.75	21.0	641.71									1.0
31	LT	STA	417+73.87	41.8	640.94								1.0	
IL 9 (PEARL STREET)														
32	RT	STA	424+89.53	21.0	644.35									1.0
33	LT	STA	424+89.53	37.0	645.37		1.0							
34	RT	STA	428+13.00	21.0	645.49					1.0				
35	LT	STA	428+13.00	21.0	645.48			1.0						
36	LT	STA	427+20.1	22.7	645.21									1.0
HARRIS STREET INTSECTION														
37	RT	STA	429+73.9	49.2	645.20								1.0	
38	RT	STA	430+05.40	44.8	645.19								1.0	
39	LT	STA	429+90.70	36.9	645.98								1.0	
40	LT	STA	430+18.30	21.0	646.08								1.0	
SUBTOTAL						*1.0*	*3.0*	*8.0*	*5.0*	*1.0*	*3.0*	*5.0*	*7.0*	*7.0*
TOTAL						**1.0**	**3.0**	**8.0**	**5.0**	**1.0**	**3.0**	**5.0**	**7.0**	**7.0**

TEMPORARY GUARDRAIL SCHEDULE								
LOCATION				TEMPORARY STEEL PLATE BEAM GUARDRAIL, TYPE A	TEMPORARY TRAFFIC BARRIER TERMINAL, TYPE 1	TERMINAL MARKER DIRECT APPLIED	LINEAR DELINEATOR PANELS, 4 INCH	GUARDRAIL AGGREGATE FOR EROSION CONTROL
				FOOT	EACH	EACH	EACH	TONS
PRE-STAGE TIBER CREEK								
STA.	402+30.6	TO	402+80.6		1.0	1.0	4.0	31.6
STA.	402+80.6	TO	404+30.6	150.0				
STA.	404+30.6	TO	404+80.6		1.0	1.0		
SUBTOTAL				*150.0*	*2.0*	*2.0*	*4.0*	*31.6*
TOTAL				**150.0**	**2.0**	**2.0**	**4.0**	**32.0**

LOCATION	AGGREGATE FOR TEMPORARY ACCESS
	TON
IL 9	
STA. 364+00 TO STA. 413+00	432.8
1' depth - 19 entrances	
STA. 413+00 TO STA. 438+30	318.9
1' depth - 14 entrances	
SUBTOTAL	751.7
TOTAL	**752.0**

STAGING TABLE									
LOCATION				TEMPORARY CONCRETE BARRIER	RELOCATE TEMPORARY CONCRETE BARRIER	PINNING TEMPORARY CONCRETE BARRIER	IMPACT ATTENUATORS, TEMPORARY (NON-REDIRECTIVE), TEST LEVEL 3	IMPACT ATTENUATORS, RELOCATE (NON-REDIRECTIVE), TEST LEVEL 3	TEMPORARY RUMBLE STRIPS	TEMPORARY BRIDGE TRAFFIC SIGNALS
				FOOT	FOOT	EACH	EACH	EACH	EACH	EACH
DOUBLE ELLIPTICAL										
STA.	375+66.0	TO	383+06.0							
STAGE I				287.5			2.0		6.0	1.0
STAGE II				125.0	287.5			2.0		
TIBER CREEK BOX CULVERT										
STA.	399+66.0	TO	407+71.0							
STAGE I				362.5		30.0	2.0			
STAGE II					362.5	30.0		2.0	3.0	1.0
SUBTOTAL				*775.0*	*650.0*	*60.0*	*4.0*	*4.0*	*9.0*	*2.0*
TOTAL				**775.0**	**650.0**	**60.0**	**4.0**	**4.0**	**9.0**	**2.0**

STAGING TEMPORARY PAVEMENT & MISC. SCHEDULE												
LOCATION				TEMPORARY EROSION CONTROL SEEDING	TEMPORARY DITCH CHECKS	AGGREGATE DITCH CHECKS	TEMPORARY EROSION CONTROL BLANKET	SUBBASE GRANULAR MATERIAL, TYPE B, 4"	CONCRETE COLLAR	REINFORCEMENT BARS	EXPANSION BOLTS 3/4 INCH	PRECAST CONCRETE BOX CULVERTS 5' X 4'	TEMPORARY SHOULDER	TEMPORARY PAVEMENT
				POUND	FOOT	TON	SQ. YD.	SQ. YD.	CU. YD.	POUND	EACH	FOOT	SQ. YD.	SQ. YD.
MAINLINE														
STA.	367+52.0	TO	377+33.0										654.0	
DOUBLE ELLIPTICAL														
STA.	375+66.0	TO	383+06.0											
STAGE I													433.3	
STAGE II														
MAINLINE														
STA.	381+33.0	TO	402+23.0										1393.3	
TIBER CREEK/FLUME														
STA.	396+53.0	TO	412+12.0											
PRE-STAGE				10.0	50.0	23.7	219.9	1914.3	2.7	24.0	8.0	17.0	45.6	1914.3
STAGE I													673.1	
STAGE II														
SUBTOTAL				*10.0*	*50.0*	*23.7*	*219.9*	*1914.3*	*2.7*	*24.0*	*8.0*	*17.0*	*3199.3*	*1914.3*
SUBTOTAL FROM SIDEWALK SCHEDULE								*2153.7*						
TOTAL				**10.0**	**SEE SEEDING SCHEDULE**	**24.0**	**220.0**	**4068.0**	**3.0**	**24.0**	**8.0**	**17.0**	**3199.0**	**1914.0**

MODEL: Default
FILE NAME: pw:\\ildot-pw.bentley.com:PWIDOT\Documents\IDOT Offices\District 4\Projects\D4_68A65\CADData\CADsheets\D468A65-3ln-schedule.dgn

USER NAME = $USER$	DESIGNED -	REVISED -
	DRAWN -	REVISED -
PLOT SCALE = 1:100	CHECKED -	REVISED -
PLOT DATE = 3/14/2025	DATE -	REVISED -

STATE OF ILLINOIS
DEPARTMENT OF TRANSPORTATION

SCHEDULES OF QUANTITIES

SCALE: | SHEET 10 OF 14 SHEETS | STA. TO STA.

F.A.P. RTE.	SECTION	COUNTY	TOTAL SHEETS	SHEET NO.
693	118RS-8,W-2	TAZEWELL	292	37
		CONTRACT NO. 68A65		
		ILLINOIS	FED. AID PROJECT	

STAGING PAVEMENT MARKING SCHEDULE

LOCATION				TEMPORARY PAVEMENT MARKING - LINE 4" - PAINT		TEMPORARY PAVEMENT MARKING - LINE 4" - TYPE IV TAPE		SHORT TERM PAVEMENT MARKING	SHORT TERM PAVEMENT MARKING REMOVAL	PAVEMENT MARKING BLACKOUT TAPE, 6"	PAVEMENT MARKING REMOVAL - GRINDING
				WHITE	DOUBLE YELLOW	WHITE	DOUBLE YELLOW				
				FOOT	FOOT	FOOT	FOOT	FOOT	SQ. FT.	FOOT	SQ. FT.
MAINLINE STAGE I											
STA.	365+26.8	TO	368+00.0			373	410		261	342.2	
STA.	368+00.0	TO	412+36.1	8872.2	8872.2						1848.7
STA.	412+36.1	TO	413+89.0		305.8						13
STA.	413+89.0	TO	417+09.3	320.3	640.6						27
STA.	418+00.0	TO	421+81.4	381.4	762.8						32
STA.	422+58.6	TO	425+09.9	251.3	502.6						21
STA.	425+09.9	TO	426+59.9								13
STA.	426+59.9	TO	429+36.0	276.1	552.2						24
STA.	430+10.9	TO	434+00.0	389.1	778.2						33
STA.	434+00.0	TO	435+04.1	59.6	208.18						9
STA.	434+73.4	TO	437+77.6	878.0							26
MAINLINE STAGE II											
STA.	365+26.8	TO	368+00.0			183.7	192.8		125.5		
STA.	368+00.0	TO	412+36.1	8872.2	8872.2						
STA.	412+36.1	TO	413+89.0		305.8						
STA.	413+89.0	TO	417+09.3	320.3	640.6						
STA.	418+00.0	TO	421+81.4	381.4	762.8						
STA.	422+58.6	TO	425+09.9	251.3	502.6						
STA.	425+09.9	TO	426+59.9								
STA.	426+59.9	TO	429+36.0	276.1	552.2						
STA.	430+10.9	TO	434+00.0	389.1	778.2						
STA.	434+00.0	TO	435+04.1	59.6	208.18						
STA.	434+73.4	TO	438+38	878.0							
STA.	439+00.0	TO	442+52.5	352.5	705.0	352.5	705.0		352.5	342.2	
MAINLINE STAGE III											
STA.	365+26.8	TO	368+00.0								
STA.	368+00.0	TO	412+36.1					665	222		
STA.	412+36.1	TO	413+89.0					23	8		
STA.	413+89.0	TO	417+09.3					48	16		
STA.	418+00.0	TO	421+81.4					57	19		
STA.	422+58.6	TO	425+09.9					38	13		
STA.	425+09.9	TO	426+59.9					23	8		
STA.	426+59.9	TO	429+36.0					41	14		
STA.	430+10.9	TO	434+00.0					58	19		
STA.	434+00.0	TO	435+04.1					16	5		
STA.	434+73.4	TO	438+38.0					55	18		
STA.	439+00.0	TO	442+52.5								
MAINLINE FINAL											
STA.	364+00.0	TO	412+36.1					1644	548		
STA.	412+36.1	TO	413+89.0					52	17		
STA.	413+89.0	TO	417+09.3					109	36		
STA.	418+00.0	TO	421+81.4					130	43		
STA.	422+58.6	TO	425+09.9					85	28		
STA.	425+09.9	TO	426+59.9					51	17		
STA.	426+59.9	TO	429+36.0					94	31		
STA.	430+10.9	TO	434+00.0					132	44		
STA.	434+00.0	TO	435+04.1					35	12		
STA.	434+73.4	TO	438+30.0					121	40		
FLUME											
STA.	407+35.0	TO	412+36.0	1002	1002						668
STA.	412+36.0	TO	414+13.0	100							33
SUBTOTAL				*24310.5*	*26952.2*	*909.2*	*1307.8*	*3478.0*	*1898.3*	*684.4*	*2748.0*
TOTAL				**SEE TEMP PAVT MARKING SCHEDULE**		**2217.0**		**3478.0**	**1898.0**	**684.0**	**2748.0**

MODEL: Default
FILE NAME: pw:\\ildot-pw.bentley.com:PWIDOT\Documents\IDOT Offices\District 4\Projects\D4 68A65\CADData\CADsheets\D468A65-sht-schedule.dgn

USER NAME = $USER$	DESIGNED -	REVISED -	
	DRAWN -	REVISED -	
PLOT SCALE = 1:100	CHECKED -	REVISED -	
PLOT DATE = 3/14/2025	DATE -	REVISED -	

STATE OF ILLINOIS
DEPARTMENT OF TRANSPORTATION

SCHEDULES OF QUANTITIES

SCALE: | SHEET 11 OF 14 SHEETS | STA. TO STA.

F.A.P. RTE.	SECTION	COUNTY	TOTAL SHEETS	SHEET NO.
693	118RS-8,W-2	TAZEWELL	292	38

CONTRACT NO. 68A65

ILLINOIS | FED. AID PROJECT

LOCATION					PERIMETER EROSION BARRIER
					FOOT
IL 9					
RT.	STA.	399+50	TO	400+05	133.8
RT.	STA.	400+76	TO	403+35	362.2
LT.	STA.	379+24	TO	379+39	32.6
LT.	STA.	403+69	TO	412+53	1658.8
LT.	STA.	422+56	TO	429+33	718.5
LT.	STA.	430+07	TO	413+18	571.5
SUBTOTAL					*3477.4*
TOTAL					**3477.0**

SEEDING SCHEDULE

LOCATION					TEMPORARY DITCH CHECKS		SEEDING, CLASS, 1	SEEDING, CLASS, 3	MULCH METHOD 2	HEAVY DUTY EROSION CONTROL BLANKET	NITROGEN FERTILIZER NUTRIENT		PHOSPHORUS FERTILIZER NUTRIENT		POTASSIUM FERTILIZER NUTRIENT		SODDING, SALT TOLERANT	SUPPLEMENTAL WATERING
											90 LB/ACRE	60 LB/ACRE	90 LB/ACRE	60 LB/ACRE	90 LB/ACRE	60 LB/ACRE		
					# (10' EACH)	FOOT	ACRE	ACRE	ACRE	SQ. YD.	POUND		POUND		POUND		SQ. YD.	UNIT
IL 9																		
RT	STA.	368+00.0	TO	379+00.0	7	70	0.85		0.85		76.9		76.9		76.9			
RT	STA.	379+00.0	TO	382+00.0	2	20	0.15		0.15		13.6		13.6		13.6			
RT	STA.	382+00.0	TO	392+00.0	5	50	0.54		0.54		48.9		48.9		48.9			
RT	STA.	392+00.0	TO	399+16.5	4	40	0.35		0.35		31.2		31.2		31.2			
RT	STA.	399+16.5	TO	400+66.5	1	10	0.18		0.18		16.1		16.1		16.1			
RT	STA.	400+66.5	TO	405+23.1	3	30	0.55		0.55		49.5		49.5		49.5			
RT	STA.	405+51.5	TO	413+00.0	4	40	0.55		0.55		49.4		49.4		49.4			8.0
RT	STA.	413+32.2	TO	417+41.9			0.18		0.18		15.9	4.1	15.9	4.1	15.9	4.1	328.8	2.6
RT	STA.	417+73.12	TO	422+00.0								5.9		5.9		5.9	476.1	
RT	STA.	422+28.3	TO	425+81.5								6.5		6.5		6.5	521.7	
RT	STA.	426+47.0	TO	429+68.5								2.5		2.5		2.5	199.6	
RT	STA.	430+00.0	TO	434+35.6								4.8		4.8		4.8	384.6	
LT	STA.	368+00.0	TO	379+00.0	6	60	0.60		0.60		54.2		54.2		54.2			
LT	STA.	379+00.0	TO	382+00.0	2	20	0.12		0.12		11.2		11.2		11.2			
LT	STA.	382+00.0	TO	393+00.0	7	70	0.38		0.38		33.8		33.8		33.8			
LT	STA.	393+00.0	TO	393+91.3	1	10	0.05		0.05		4.3		4.3		4.3			
LT	STA.	394+09.4	TO	397+65.5	3	30	0.24		0.24		21.2		21.2		21.2			
LT	STA.	397+65.5	TO	409+00.0	7	70		1.04		5057.39	94.0		94.0		94.0			
LT	STA.	409+00.0	TO	412+53.27			0.13		0.13		11.7		11.7		11.7			
LT	STA.	413+00.0	TO	417+32.26								5.0		5.0		5.0	406.5	
LT	STA.	417+73.12	TO	422+00.0								6.2		6.2		6.2	498.5	
LT	STA.	422+28.3	TO	429+56.1			0.29		0.29		26.1		26.1		26.1			4.2
LT	STA.	429+89.6	TO	435+17.5								6.8		6.8		6.8	551.5	
SUBTOTAL						*520.0*	*5.16*	*1.0*	*5.16*	*5057.4*	*558.1*	*41.7*	*558.1*	*41.7*	*558.1*	*41.7*	*3367.2*	*14.7*
SUBTOTAL FROM STAGING TEMP PAVT & MISC						*50.0*												
TOTAL						**570.0**	**5.25**	**1.0**	**5.25**	**5057.0**	**600.0**		**600.0**		**600.0**		**3367.0**	**14.7**

BIKE LANE PAVEMENT MARKING

LOCATION				MODIFIED URETHANE PAVEMENT MARKING - LETTERS AND SYMBOLS
				BIKE LANE
				SQ. FT.
RT. IL 9				
STA.	370+00			10.2
STA.	377+00			10.2
STA.	387+00			10.2
STA.	391+25			10.2
STA.	393+25			10.2
STA.	401+50			10.2
STA.	405+79	TO	407+67	10.2
STA.	408+40	TO	412+36	10.2
STA.	413+75			10.2
STA.	416+25			10.2
STA.	418+75			10.2
STA.	422+75			10.2
STA.	425+00			10.2
STA.	426+50			10.2
STA.	429+00			10.2
STA.	431+00			10.2
STA.	435+00			10.2
LT. IL 9				
STA.	375+25			10.2
STA.	385+00			10.2
STA.	391+50			10.2
STA.	397+00			10.2
STA.	406+75			10.2
STA.	409+00	TO	411+00	10.2
STA.	414+00			10.2
STA.	416+75			10.2
STA.	420+50			10.2
STA.	423+00			10.2
STA.	425+00			10.2
STA.	427+00			10.2
STA.	429+00			10.2
STA.	434+00			10.2
STA. EQN 435+04.09 BK = 434+73.24 AH				
STA.	438+00			10.2
SUBTOTAL				*326.4*
TOTAL				**SEE PAVEMENT MARKING TABLE**

LANDSCAPE SCHEDULE

LOCATION					PLANTING SOIL MIX FURNISH AND PLACE, 12"	RIVER ROCK, 6"	WEED BARRIER FABRIC	SHRUB, HYDRANGEA QUERCIFOLIA BRENHIL (GATSBY GAL OAKLEAF HYDRANGEA) 3 GALLON CONTAINER	SHRUB, JUNIPERUS VIRGINIANA BLUE MOUNTAIN, (BLUE MOUNTAIN JUNIPER), 5 GALLON	PERENNIAL PLANTS, ORNAMENTAL TYPE, 5-GALLON POT (ILEX CRENATA, SOFT TOUCH)	PERENNIAL PLANTS, PRAIRIE TYPE, 2,GALLON POT (ANDROPOGON GERARDII, BLACKHAWKS)	SHRUB, RHUS AROMATICA GRO-LOW (GRO-LOW FRAGRANT SUMAC), 5 GALLON	TREE, CERCIS CANADENSIS (REDBUD), CONTAINER GROWN, 5 GALLON	TREE, SYRINGA RETICULATA (JAPANESE TREE LILAC), CONTAINER GROWN, 5 GALLON	TREE, MALUS ROYAL RAINDROPS (ROYAL RAINDROPS CRABAPPLE), 2 1/2" CALIPER, TREE FORM, BALLED AND BURLAPPED
					SQ YD	SQ YD	SQ YD	EACH	EACH	UNIT	UNIT	EACH	EACH	EACH	EACH
IL 9															
LT	STA.	398+50.0	TO	401+00.0								50.0	10.0	7.0	3.0
LT	STA.	409+00.0	TO	412+60.0	356.0	356.0	356.0	15.0	11.0	17.0	10.0				
TOTAL					**356.0**	**356.0**	**356.0**	**15.0**	**11.0**	**17.0**	**10.0**	**50.0**	**10.0**	**7.0**	**3.0**

MODEL: Default
FILE NAME: pw:\\ildot-pw.bentley.com:PWIDOT\Documents\IDOT Offices\District 4\Projects\D4_68A65\CADData\CADsheets\D468A65-phc-schedule.dgn

USER NAME = $USER$	DESIGNED -	REVISED -	
	DRAWN -	REVISED -	
PLOT SCALE = 1:100	CHECKED -	REVISED -	
PLOT DATE = 3/14/2025	DATE -	REVISED -	

STATE OF ILLINOIS
DEPARTMENT OF TRANSPORTATION

SCHEDULES OF QUANTITIES

SCALE: | SHEET 12 OF 14 SHEETS | STA. TO STA.

F.A.P. RTE.	SECTION	COUNTY	TOTAL SHEETS	SHEET NO.
693	118RS-8.W-2	TAZEWELL	292	39
		CONTRACT NO. 68A65		
		ILLINOIS	FED. AID PROJECT	

PAVEMENT MARKING

LOCATION	LENGTH	MODIFIED URETHANE PAVEMENT MARKING - LINE 4" YELLOW SKIP	MODIFIED URETHANE PAVEMENT MARKING - LINE 4" YELLOW SOLID	GROOVING FOR RECESSED PAVEMENT MARKING 5"	MODIFIED URETHANE PAVEMENT MARKING - LINE 6" WHITE SOLID	GROOVING FOR RECESSED PAVEMENT MARKING 7"	MODIFIED URETHANE PAVEMENT MARKING - LINE 8" WHITE SOLID	GROOVING FOR RECESSED PAVEMENT MARKING 9"	MODIFIED URETHANE PAVEMENT MARKING - LINE 12" YELLOW SOLID	GROOVING FOR RECESSED PAVEMENT MARKING 13"	MODIFIED URETHANE PAVEMENT MARKING - LINE 24" STOP BAR	MODIFIED URETHANE PAVEMENT MARKING - LINE 24" CROSSWALK	GROOVING FOR RECESSED PAVEMENT MARKING 25"	MODIFIED URETHANE PAVEMENT MARKING - LETTERS AND SYMBOLS # OF SYMBOLS	MODIFIED URETHANE PAVEMENT MARKING - LETTERS AND SYMBOLS ARROW	GROOVING FOR RECESSED PAVEMENT MARKING, LETTERS AND SYMBOLS	RAISED REFLECTIVE PAVEMENT MARKER REMOVAL	RAISED REFLECTIVE PAVEMENT MARKER 1 WAY CRYSTAL	RAISED REFLECTIVE PAVEMENT MARKER 1 WAY AMBER	RAISED REFLECTIVE PAVEMENT MARKER 2 WAY AMBER
	FOOT	FOOT	FOOT	FOOT	FOOT	FOOT	FOOT	FOOT	FOOT	FOOT	FOOT	FOOT	FOOT		SQ. FT.	SQ. FT.	EACH	EACH	EACH	EACH
IL RT. 9																				
STA. 364+00 TO 368+00	400.0		800.0	800.0	800.0	800.0											10.0			10.0
STA. 368+00 TO 371+58	357.5		1365.4	1365.4	715.0	715.0			117.8	117.8							9.0		18.0	
STA. 371+58 TO 374+00	242.5		970.0	970.0	485.0	485.0			189.6	189.6							6.0		12.0	
STA. 374+00 TO 391+77	1777.0	900.0	3554.0	4454.0	3554.0	3554.0								9.0	140.4	190.4	44.0			88.0
STA. 391+77 TO 392+50	73.0				73.0	73.0											2.0			
STA. 392+50 TO 412+36	1986.0	1000.0	3972.0	4972.0	3972.0	3972.0								6.0	93.6	127.0	50.0			100.0
WEST ST												48.0	48.0				0.0			
STA. 413+35 TO 414+37	102.0		182.0	182.0	165.5	165.5	109.0	109.0				72.0	72.0	2.0	31.2	42.3	3.0	3.0		3.0
STA. 414+37 TO 415+40	103.0		206.0	206.0	206.0	206.0											3.0			3.0
STA. 415+40 TO 417+10	170.0	80.0	340.0	420.0	340.0	340.0								4.0	62.4	84.6	4.0			8.0
LOCUST ST											36.0	126.0	162.0				0.0			
STA. 418+10 TO 421+61	351.0	180.0	702.0	882.0	702.0	702.0						72.0	72.0	4.0	62.4	84.6	9.0			18.0
SAMPSON ST											15.0	108.0	123.0				0.0			
STA. 422+67 TO 425+54	287.0	140.0	574.0	714.0	574.0	574.0						72.0	72.0	4.0	62.4	84.6	7.0			14.0
STA. 425+54 TO 426+46	92.0				92.0	92.0											2.0			
STA. 426+46 TO 429+26	280.0	140.0	560.0	700.0	560.0	560.0								4.0	62.4	84.6	7.0			14.0
HARRIS ST.																	0.0			
STA. 430+00 TO 434+08	408.0	200.0	786.0	986.0	759.0	759.0						78.0	78.0	4.0	62.4	84.6	10.0			20.0
STA. 434+08 TO 434+87	79.0				79.0	79.0											2.0			
STA. 434+87 TO 435+04	17.1	20.0	34.2	54.2	34.2	34.2											0.0			
STA. EQN 435+04.09 BK = 434+73.24 AH																				
STA. 434+73 TO 438+28	354.8	180.0	709.5	889.5	709.5	709.5								6.0	93.6	127.0	9.0			18.0
SUBTOTAL		*2840.0*	*14755.1*	*17595.1*	*13820.2*	*13820.2*	*109.0*	*109.0*	*307.4*	*307.4*	*51.0*	*576.0*	*627.0*		*670.8*	*909.9*	*177.0*	*3.0*	*30.0*	*296.0*
BIKE LANE MARKING TABLE SUBTOTAL															*326.4*					
TOTAL		**17595.0**		**17595.0**	**13820.0**	**13820.0**	**109.0**	**109.0**	**307.0**	**307.0**	**627.0**		**627.0**	**997.0**		**910.0**	**177.0**	**329.0**		

SIGN SCHEDULE

LOCATION		MUTCD NO.	DESCRIPTION	WIDTH	HIEGHT	SIGN PANEL - TYPE 1	TELESCOPING STEEL SIGN SUPPORT	REMOVE AND RELOCATE SIGN PANEL
IL RT. 9				IN.	IN.	SQ. FT.	FT.	EACH
STA.	OFFSET							
368+00	24.0 RT.	R-3-17	BIKE LANE	24.0	18.0	3.0	12.5	
		R3-17aP	AHEAD	24.0	9.0	1.5		
371+00	30.0 LT.	R-3-17	BIKE LANE	24.0	18.0	3.0	13.5	
		R3-17bP	ENDS	24.0	9.0	1.5		
377+00	30.0 RT.	R-3-17	BIKE LANE	24.0	18.0	3.0	13.5	
389+83.3	37.0 RT.		BIG ARTS YOKEL					1.0
391+50	30.0 LT.	R-3-17	BIKE LANE	24.0	18.0	3.0	13.5	
393+45	30.0 RT.	R-3-17	BIKE LANE	24.0	18.0	3.0	13.5	
406+60	30.0 LT.	R-3-17	BIKE LANE	24.0	18.0	3.0	13.5	
409+00	28.0 RT.	R-3-17	BIKE LANE	24.0	18.0	3.0	13.5	
409+80	26.5 RT.	S1-1	SCHOOL CROSSING	36.0	36.0	9.0	13.5	
		W16-9P	AHEAD	24.0	12.0	2.0		
416+40	25.0 RT.	R-3-17	BIKE LANE	24.0	18.0	3.0	13.5	
416+70	25.0 LT.	R-3-17	BIKE LANE	24.0	18.0	3.0	13.5	
420+50	25.0 LT.	R-3-17	BIKE LANE	24.0	18.0	3.0	13.5	
421+00	25.0 RT.	R-3-17	BIKE LANE	24.0	18.0	3.0	13.5	
427+00	25.0 LT.	R-3-17	BIKE LANE	24.0	18.0	3.0	13.5	
437+50	25.0 RT.	R-3-17	BIKE LANE	24.0	18.0	3.0	14.5	
		R3-17bP	ENDS	24.0	9.0	1.5		
440+00	25.0 LT.	R-3-17	BIKE LANE	24.0	18.0	3.0	14.5	
		R3-17aP	AHEAD	24.0	9.0	1.5		
TOTAL						**59.0**	**203.5**	**1.0**

RIGHT OF WAY MARKER SCHEDULE

LOCATION			OFFSET	METHOD	FURNISHING AND ERECTING RIGHT OF WAY MARKERS	REMOVE RIGHT-OF-WAY MARKERS
			FT.		EACH	EACH
IL 9						
LT	STA	368+00.00	36.0	A	1.0	
LT	STA	369+00.00	50.0	A	1.0	
LT	STA	374+70.00	50.0	A	1.0	
LT	STA	380+00.00	45.0	A	1.0	
LT	STA	382+20.00	45.0	A	1.0	
LT	STA	383+22.62	64.7	A	1.0	
LT	STA	388+30.39	45.0	A	1.0	
RT	STA	388+63.9	40.0			1.0
RT	STA	393+71.21	55.0	A	1.0	
RT	STA	395+00.00	55.0	A	1.0	
RT	STA	397+90.00	50.0	A	1.0	
RT	STA	399+13.7	40.0			1.0
RT	STA	399+93.29	245.8	A	1.0	
RT	STA	400+07.22	236.7	A	1.0	
RT	STA	400+07.11	55.0	A	1.0	
RT	STA	400+66.49	55.0	A	1.0	
RT	STA	400+74.99	192.1	A	1.0	
RT	STA	402+62.7	55.0			1.0
RT	STA	402+76.34	60.0	A	1.0	
TOTAL					**16.0**	**3.0**

JOBSITE TABLE

LOCATION	MOBILIZATION	ENGINEER'S FIELD OFFICE, TYPE A	CHANGEABLE MESSAGE SIGN*	CONSTRUCTION STATION LAYOUT	CONSTRUCTION LAYOUT	MOWING**
	LSUM	CAL MO	CAL DAY	LSUM	LSUM	ACRE
JOBSITE	1.0	19.0	14.0	1.0	1.0	3.72
TOTAL	**1.0**	**19.0**	**14.0**	**1.0**	**1.0**	**3.75**

*2 BOARDS AT 7 DAYS EACH
**2 MOWINGS

TEMPORARY PAVEMENT MARKING

LOCATION				LENGTH	TEMPORARY PAVEMENT MARKING - LINE 4" - PAINT		TEMPORARY PAVEMENT MARKING - LINE 6" - PAINT	TEMPORARY PAVEMENT MARKING - LINE 8" - PAINT	TEMPORARY PAVEMENT MARKING - LINE 12" - PAINT	TEMPORARY PAVEMENT MARKING - LINE 24" - PAINT	
					YELLOW		WHITE	WHITE	YELLOW	STOP BAR	CROSSWALK
					SKIP	SOLID	SOLID	SOLID	SOLID		
				FOOT	FOOT	FOOT	FOOT	FOOT	FOOT	FOOT	FOOT
IL RT. 9											
STA.	364+00	TO	368+00	400.0		800.0	800.0				
STA.	368+00	TO	371+58	357.5		1365.4	715.0		117.8		
STA.	371+58	TO	374+00	242.5		970.0	485.0		189.6		
STA.	374+00	TO	391+77	1777.0	900.0	3554.0	3554.0				
STA.	391+77	TO	392+50	73.0			73.0				
STA.	392+50	TO	412+36	1986.0	1000.0	3972.0	3972.0				
	WEST ST										48.0
STA.	413+35	TO	414+37	102.0		182.0	165.5	109.0			72.0
STA.	414+37	TO	415+40	103.0		206.0	206.0				
STA.	415+40	TO	417+10	170.0	80.0	340.0	340.0				
	LOCUST ST									36.0	126.0
STA.	418+10	TO	421+61	351.0	180.0	702.0	702.0				72.0
	SAMPSON ST									15.0	108.0
STA.	422+67	TO	425+54	287.0	140.0	574.0	574.0				72.0
STA.	425+54	TO	426+46	92.0			92.0				
STA.	426+46	TO	429+26	280.0	140.0	560.0	560.0				
	HARRIS ST.										
STA.	430+00	TO	434+08	408.0	200.0	786.0	759.0				78.0
STA.	434+08	TO	434+87	79.0			79.0				
STA.	434+87	TO	435+04	17.1	20.0	34.2	34.2				
STA. EQN 435+04.09 BK = 434+73.24 AH											
STA.	434+73	TO	438+28	354.8	180.0	709.5	709.5				
SUBTOTAL					*2840.0*	*14755.1*	*13820.2*	*109.0*	*307.4*	*51.0*	*576.0*
STAGING PAVT MARK SCHEDULE TOTAL					*51262.7*						
TOTAL					**68858.0**		**13820.0**	**109.0**	**307.0**	**627.0**	

TRAFFIC CONTROL TABLE

LOCATION	TRAFFIC CONTROL AND PROTECTION, STANDARD 701201	TRAFFIC CONTROL AND PROTECTION, STANDARD 701206	TRAFFIC CONTROL AND PROTECTION, STANDARD 701306	TRAFFIC CONTROL AND PROTECTION, STANDARD 701321	TRAFFIC CONTROL AND PROTECTION, STANDARD 701326	TRAFFIC CONTROL AND PROTECTION, (SPECIAL)	TRAFFIC CONTROL AND PROTECTION, STANDARD 701336	TRAFFIC CONTROL AND PROTECTION, STANDARD 701501	TRAFFIC CONTROL AND PROTECTION, STANDARD 701502	TRAFFIC CONTROL AND PROTECTION, STANDARD 701701	TRAFFIC CONTROL AND PROTECTION, STANDARD 701801	TRAFFIC CONTROL AND PROTECTION, STANDARD BLR 21	TRAFFIC CONTROL SURVEILLANCE
	LSUM	LSUM	LSUM	EACH	LSUM	LSUM	LSUM	LSUM	LSUM	LSUM	LSUM	LSUM	CAL DAY
JOBSITE	1.0	1.0	1.0	2.0	1.0	1.0	1.0	1.0	1.0	1.0	1.0	1.0	5.0
TOTAL	**1.0**	**1.0**	**1.0**	**2.0**	**1.0**	**1.0**	**1.0**	**1.0**	**1.0**	**1.0**	**1.0**	**1.0**	**5.0**

MODEL: Default
FILE NAME: pw:\\ildot-pw.bentley.com:PWIDOT\Documents\IDOT Offices\District 4\Projects\D4_68A65\CAD\Data\CAD\sheets\D468A65-sht-schedule.dgn

USER NAME = $USER$	DESIGNED -	REVISED -
	DRAWN -	REVISED -
PLOT SCALE = 1:100	CHECKED -	REVISED -
PLOT DATE = 3/14/2025	DATE -	REVISED -

STATE OF ILLINOIS
DEPARTMENT OF TRANSPORTATION

SCHEDULES OF QUANTITIES

SCALE: | SHEET 14 OF 14 SHEETS | STA. TO STA.

F.A.P. RTE.	SECTION	COUNTY	TOTAL SHEETS	SHEET NO.
693	118RS-8.W-2	TAZEWELL	292	41

CONTRACT NO. 68A65
ILLINOIS | FED. AID PROJECT

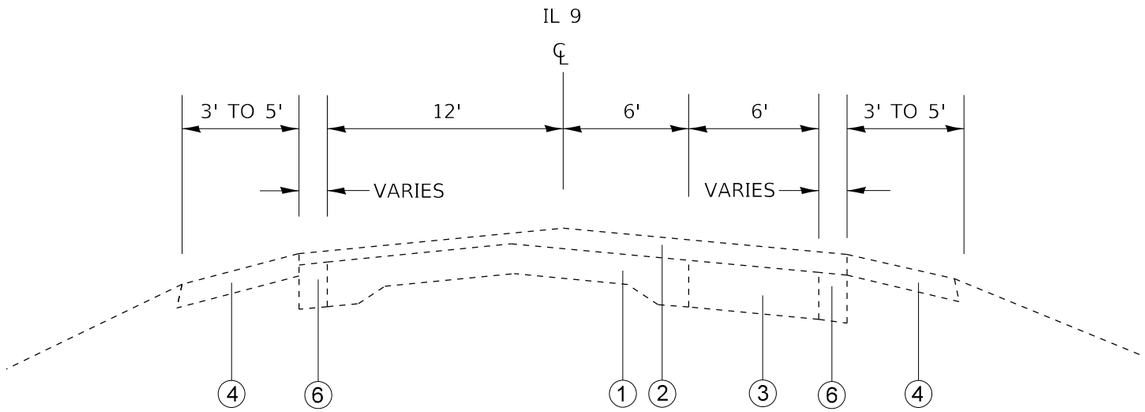

EXISTING TYPICAL SECTION

STA. 367+88 TO 409+12

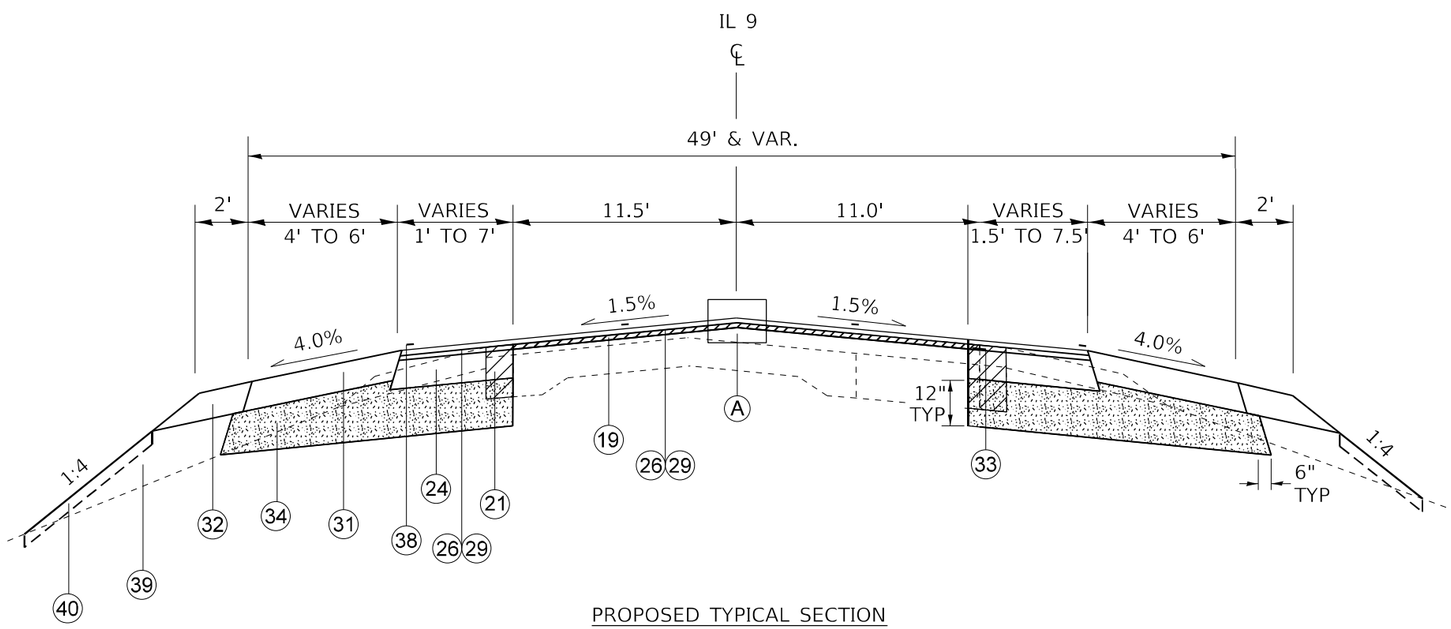

PROPOSED TYPICAL SECTION

STA. 367+88 TO 370+00

LEGEND

EXISTING

1. PCC PAVEMENT 9-6-9
2. HOT-MIX ASPHALT OVERLAY
3. BASE COURSE WIDENING
4. AGGREGATE SHOULDER
5. CCC&G TY B6.12
6. BITUMINOUS SHOULDER (15")
7. SUB-BASE GRANULAR MATERIAL

PROPOSED

18. HMA SURFACE REMOVAL, VAR. DEPTH
19. HOT-MIX ASPHALT SURFACE REMOVAL, 1 1/4"
20. HOT-MIX ASPHALT SURFACE REMOVAL, 2"
21. PAVED SHOULDER REMOVAL (15")
22. PAVEMENT REMOVAL (11")
23. JOINT TRIMMING
24. HMA BASE COURSE, (8 1/4" LT SIDE & 9 3/4" RT SIDE)
25. HMA BASE COURSE, 11"
26. POLY. HMA IL 4.75 BINDER COURSE N50, 1.0"
27. HMA IL-9.5 BINDER COURSE N50, VARIES
28. HMA IL-19.0 BINDER COURSE N50, VARIES
29. POLY. HMA SURF. COURSE, MIX "E", N50, 1 3/4"
30. POLY. HMA SURF. COURSE, MIX "E", N50, 2"
31. HOT-MIX ASPHALT SHOULDERS, 8"
32. AGGREGATE SHOULDERS, TYPE B, 8"
33. STRIP CRACK CONTROL TREATMENT
34. AGGREGATE SUBGRADE IMPROVEMENT
35. SUBBASE GRANULAR MATERIAL, TYPE B
36. COMB. CONCRETE CURB & GUTTER, TY B-6.24
37. PCC SIDEWALK
38. MODIFIED URETHANE PAVEMENT MARKING
39. EMBANKMENT
40. TOPSOIL FURNISH & PLACE, 4"
41. HANDRAIL

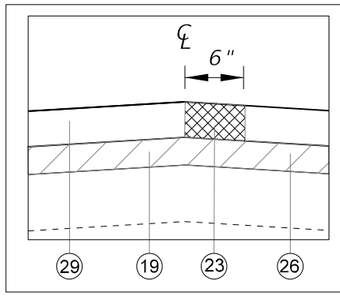

NOTE:
SEE TRAFFIC CONTROL PLANS AND HMA JOINT TRIMMING SPECIAL PROVISION FOR JOINT TREATMENT DETAILS

DETAIL "A"

MODEL: Default
FILE NAME: pw:\\ildot-pw.bentley.com:PWIDOT\Documents\IDOT Offices\District 4\Projects\D4_68A65\CADData\CADsheets\D468A65-ch-typical.dgn

USER NAME = $USER$	DESIGNED -	REVISED -	
	DRAWN -	REVISED -	
PLOT SCALE = 1:40	CHECKED -	REVISED -	
PLOT DATE = 2/14/2025	DATE -	REVISED -	

STATE OF ILLINOIS
DEPARTMENT OF TRANSPORTATION

TYPICAL SECTION

SCALE: | SHEET 1 OF 6 SHEETS | STA. TO STA.

F.A.P. RTE.	SECTION	COUNTY	TOTAL SHEETS	SHEET NO.
693	118RS-8.W-2	TAZEWELL	292	42

CONTRACT NO. 68A65

ILLINOIS | FED. AID PROJECT

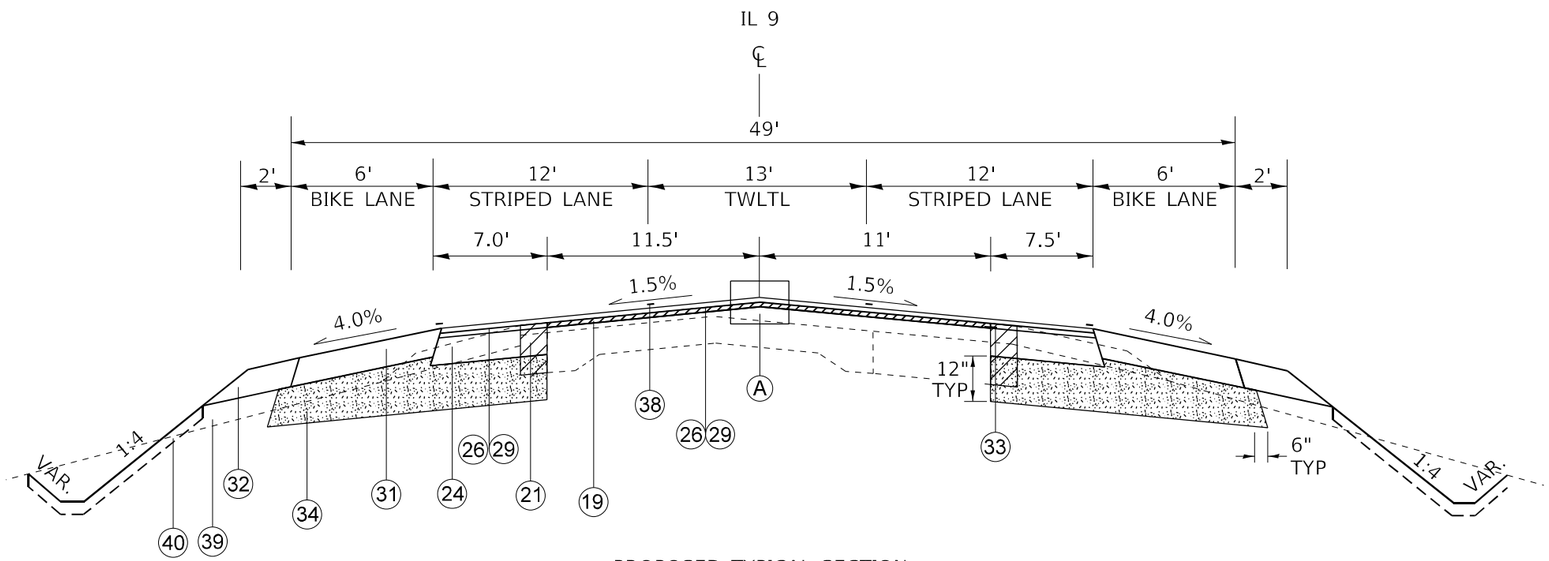

PROPOSED TYPICAL SECTION

STA. 370+00 TO 390+42.7

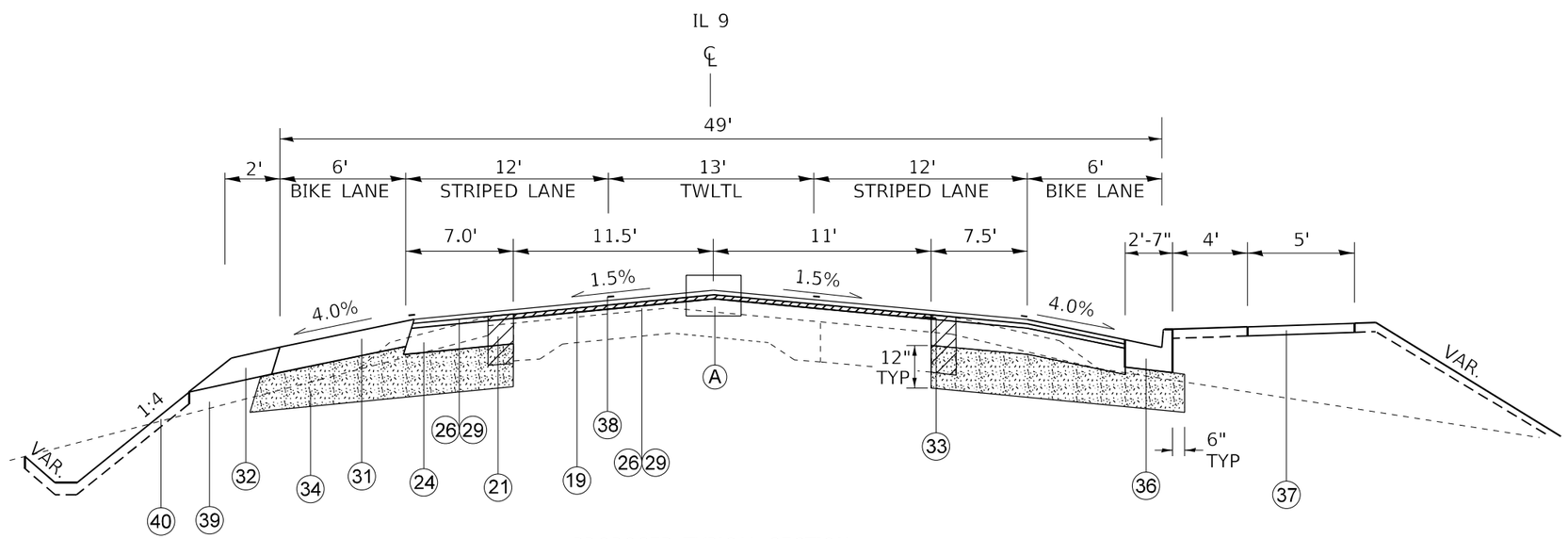

PROPOSED TYPICAL SECTION

STA. 390+42.7 TO 399+03

LEGEND

EXISTING

1. PCC PAVEMENT 9-6-9
2. HOT-MIX ASPHALT OVERLAY
3. BASE COURSE WIDENING
4. AGGREGATE SHOULDER
5. CCC&G TY B6.12
6. BITUMINOUS SHOULDER (15")
7. SUB-BASE GRANULAR MATERIAL

PROPOSED

18. HMA SURFACE REMOVAL, VAR. DEPTH
19. HOT-MIX ASPHALT SURFACE REMOVAL, 1 1/4"
20. HOT-MIX ASPHALT SURFACE REMOVAL, 2"
21. PAVED SHOULDER REMOVAL (15")
22. PAVEMENT REMOVAL (11")
23. JOINT TRIMMING
24. HMA BASE COURSE, (8 1/4" LT SIDE & 9 3/4" RT SIDE)
25. HMA BASE COURSE, 11"
26. POLY. HMA IL 4.75 BINDER COURSE N50, 1.0"
27. HMA IL-9.5 BINDER COURSE N50, VARIES
28. HMA IL-19.0 BINDER COURSE N50, VARIES
29. POLY. HMA SURF. COURSE, MIX "E", N50, 1 3/4"
30. POLY. HMA SURF. COURSE, MIX "E", N50, 2"
31. HOT-MIX ASPHALT SHOULDERS, 8"
32. AGGREGATE SHOULDERS, TYPE B, 8"
33. STRIP CRACK CONTROL TREATMENT
34. AGGREGATE SUBGRADE IMPROVEMENT
35. SUBBASE GRANULAR MATERIAL, TYPE B
36. COMB. CONCRETE CURB & GUTTER, TY B-6.24
37. PCC SIDEWALK
38. MODIFIED URETHANE PAVEMENT MARKING
39. EMBANKMENT
40. TOPSOIL FURNISH & PLACE, 4"
41. HANDRAIL

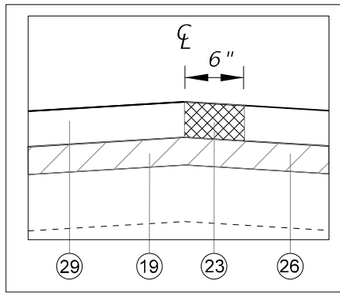

NOTE:
SEE TRAFFIC CONTROL PLANS AND HMA JOINT TRIMMING SPECIAL PROVISION FOR JOINT TREATMENT DETAILS

DETAIL "A"

MODEL: Default
FILE NAME: pw:\\ildot-pw.bentley.com:PWIDOT\Documents\IDOT Offices\District 4\Projects\D4 68A65\CADData\CADsheets\D468A65-sht-typical.dgn

USER NAME = $USER$	DESIGNED -	REVISED -	
	DRAWN -	REVISED -	
PLOT SCALE = 1:40	CHECKED -	REVISED -	
PLOT DATE = 2/14/2025	DATE -	REVISED -	

STATE OF ILLINOIS
DEPARTMENT OF TRANSPORTATION

TYPICAL SECTION

SCALE: | SHEET 2 OF 6 SHEETS | STA. | TO STA.

F.A.P. RTE.	SECTION	COUNTY	TOTAL SHEETS	SHEET NO.
693	118RS-8.W-2	TAZEWELL	292	43
		CONTRACT NO. 68A65		
		ILLINOIS	FED. AID PROJECT	

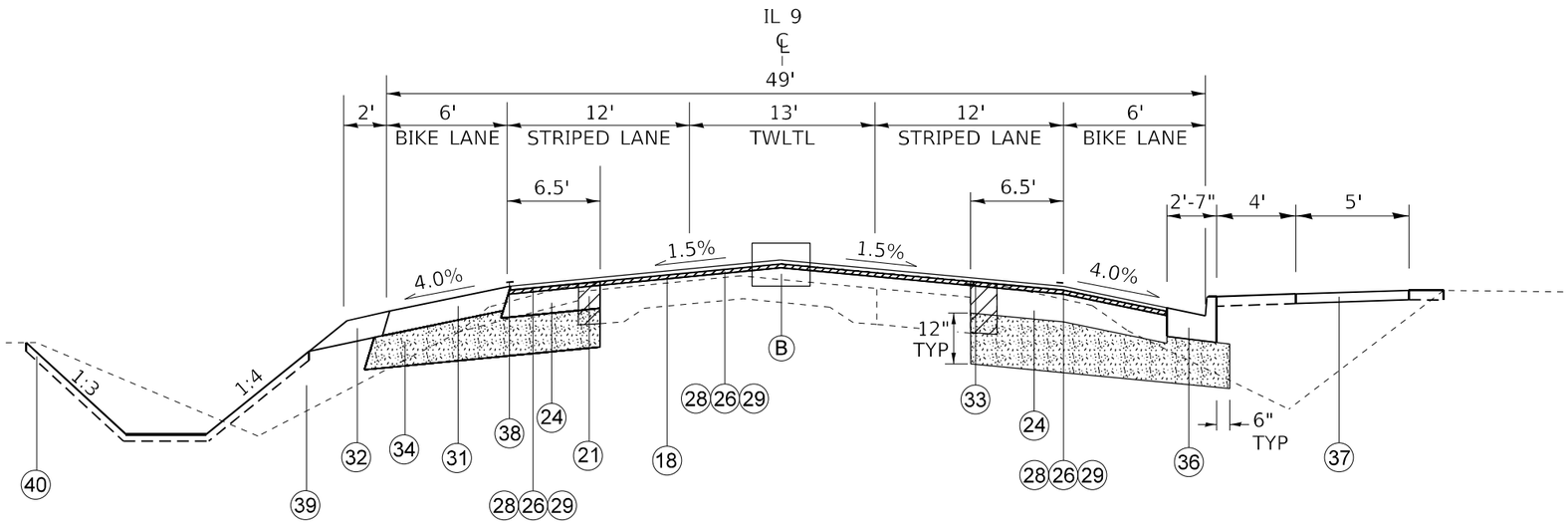

PROPOSED TYPICAL SECTION

STA. 399+03 TO 408+53.86
(TIBER CREEK CULVERT REPLACEMENT - STA. 403+58)

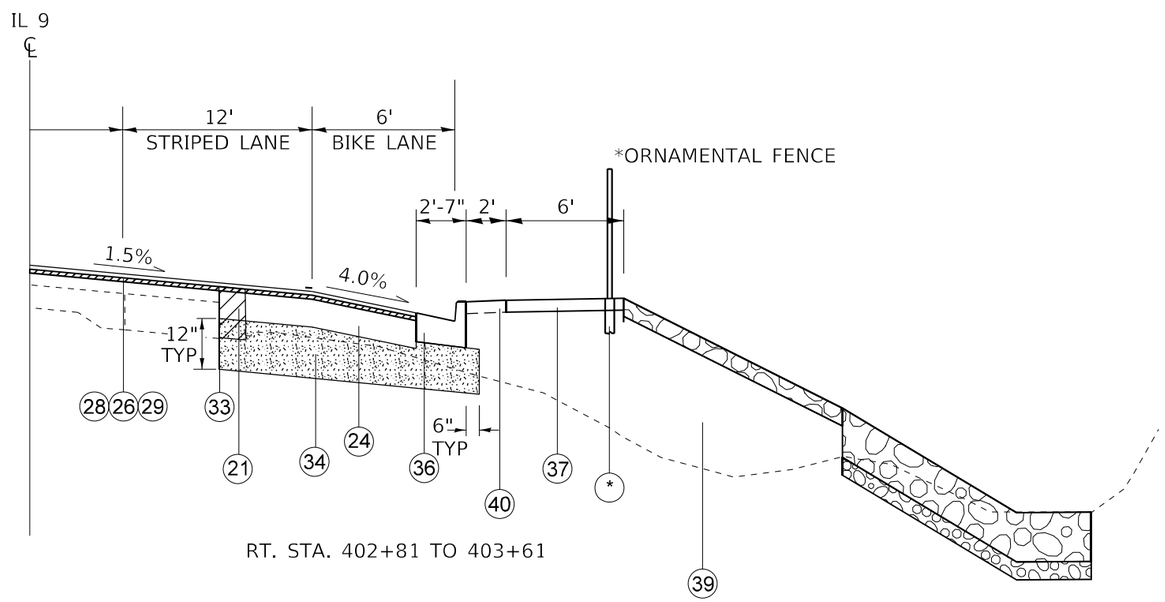

RT. STA. 402+81 TO 403+61

LEGEND

EXISTING

1. PCC PAVEMENT 9-6-9
2. HOT-MIX ASPHALT OVERLAY
3. BASE COURSE WIDENING
4. AGGREGATE SHOULDER
5. CCC&G TY B6.12
6. BITUMINOUS SHOULDER (15")
7. SUB-BASE GRANULAR MATERIAL

PROPOSED

18. HMA SURFACE REMOVAL, VAR. DEPTH
19. HOT-MIX ASPHALT SURFACE REMOVAL, 1 1/4"
20. HOT-MIX ASPHALT SURFACE REMOVAL, 2"
21. PAVED SHOULDER REMOVAL (15")
22. PAVEMENT REMOVAL (11")
23. JOINT TRIMMING
24. HMA BASE COURSE, (8 1/4" LT SIDE & 9 3/4" RT SIDE)
25. HMA BASE COURSE, 11"
26. POLY. HMA IL 4.75 BINDER COURSE N50, 1.0"
27. HMA IL-9.5 BINDER COURSE N50, VARIES
28. HMA IL-19.0 BINDER COURSE N50, VARIES
29. POLY. HMA SURF. COURSE, MIX "E", N50, 1 3/4"
30. POLY. HMA SURF. COURSE, MIX "E", N50, 2"
31. HOT-MIX ASPHALT SHOULDERS, 8"
32. AGGREGATE SHOULDERS, TYPE B, 8"
33. STRIP CRACK CONTROL TREATMENT
34. AGGREGATE SUBGRADE IMPROVEMENT
35. SUBBASE GRANULAR MATERIAL, TYPE B
36. COMB. CONCRETE CURB & GUTTER, TY B-6.24
37. PCC SIDEWALK
38. MODIFIED URETHANE PAVEMENT MARKING
39. EMBANKMENT
40. TOPSOIL FURNISH & PLACE, 4"
41. HANDRAIL

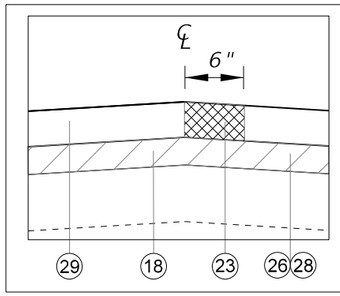

NOTE:
SEE TRAFFIC CONTROL PLANS AND HMA JOINT TRIMMING SPECIAL PROVISION FOR JOINT TREATMENT DETAILS

DETAIL "B"

MODEL: Default
FILE NAME: pw:\\ildot-pw.bentley.com:PWIDOT\Documents\IDOT Offices\District 4\Projects\D4_68A65\CADData\CADsheets\D468A65-sht-typical.dgn

USER NAME = $USER$	DESIGNED -	REVISED -	
	DRAWN -	REVISED -	
PLOT SCALE = 1:40	CHECKED -	REVISED -	
PLOT DATE = 2/14/2025	DATE -	REVISED -	

STATE OF ILLINOIS
DEPARTMENT OF TRANSPORTATION

TYPICAL SECTION

SCALE: | SHEET 3 OF 6 SHEETS | STA. TO STA.

F.A.P. RTE.	SECTION	COUNTY	TOTAL SHEETS	SHEET NO.
693	118RS-8,W-2	TAZEWELL	292	44
		CONTRACT NO. 68A65		
		ILLINOIS	FED. AID PROJECT	

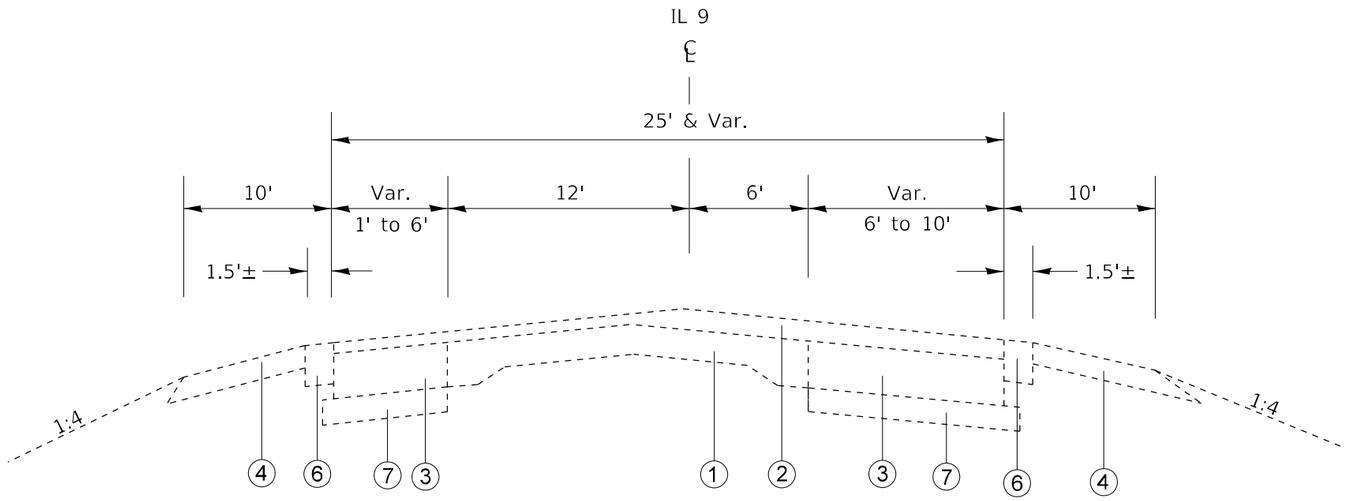

EXISTING TYPICAL SECTION

STA. 409+12 TO 412+34

SUPER ELEVATION NOT SHOWN
STA. 410+30.40 TO 419+36.93
EXISTING: 0.025'/FT

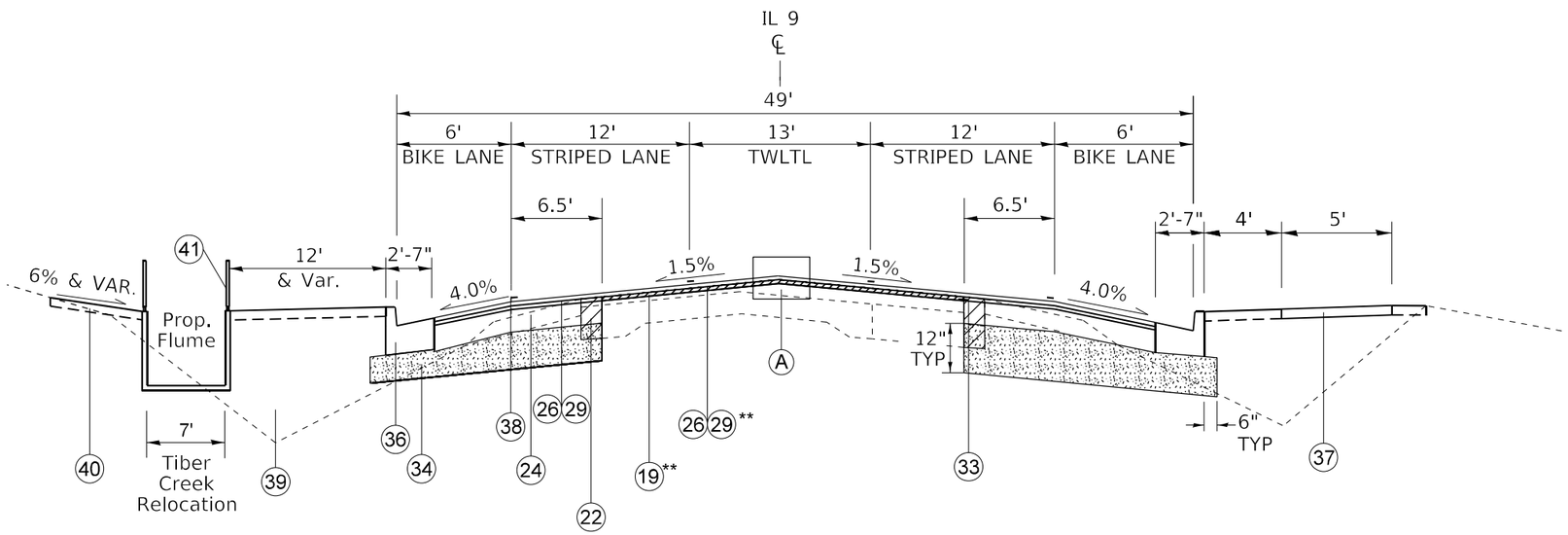

PROPOSED TYPICAL SECTION

STA. 408+53.86 TO 412+42

(SUPERELEVATION TRANSISTION BEGINS 411+47.12)

** STA. 412+12 TO 412+42:
HMA SURFACE REMOVAL, TAPERS 1¼" TO 2"
BUTT-JOINT IN THE POLY HMA BINDER COURSE IL 4.75
POLY HMA SURFACE COURSE, TAPERS 1 3/4" TO 2"

LEGEND

EXISTING

1. PCC PAVEMENT 9-6-9
2. HOT-MIX ASPHALT OVERLAY
3. BASE COURSE WIDENING
4. AGGREGATE SHOULDER
5. CCC&G TY B6.12
6. BITUMINOUS SHOULDER (15")
7. SUB-BASE GRANULAR MATERIAL

PROPOSED

18. HMA SURFACE REMOVAL, VAR. DEPTH
19. HOT-MIX ASPHALT SURFACE REMOVAL, 1 1/4"
20. HOT-MIX ASPHALT SURFACE REMOVAL, 2"
21. PAVED SHOULDER REMOVAL (15")
22. PAVEMENT REMOVAL (11")
23. JOINT TRIMMING
24. HMA BASE COURSE, (8 1/4" LT SIDE & 9 3/4" RT SIDE)
25. HMA BASE COURSE, 11"
26. POLY. HMA IL 4.75 BINDER COURSE N50, 1.0"
27. HMA IL-9.5 BINDER COURSE N50, VARIES
28. HMA IL-19.0 BINDER COURSE N50, VARIES
29. POLY. HMA SURF. COURSE, MIX "E", N50, 1 3/4"
30. POLY. HMA SURF. COURSE, MIX "E", N50, 2"
31. HOT-MIX ASPHALT SHOULDERS, 8"
32. AGGREGATE SHOULDERS, TYPE B, 8"
33. STRIP CRACK CONTROL TREATMENT
34. AGGREGATE SUBGRADE IMPROVEMENT
35. SUBBASE GRANULAR MATERIAL, TYPE B
36. COMB. CONCRETE CURB & GUTTER, TY B-6.24
37. PCC SIDEWALK
38. MODIFIED URETHANE PAVEMENT MARKING
39. EMBANKMENT
40. TOPSOIL FURNISH & PLACE, 4"
41. HANDRAIL

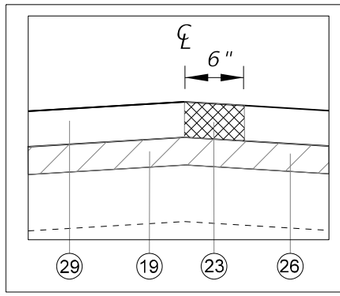

NOTE:
SEE TRAFFIC CONTROL PLANS AND HMA JOINT TRIMMING SPECIAL PROVISION FOR JOINT TREATMENT DETAILS

DETAIL "A"

MODEL: Default
FILE NAME: pw:\\ildot-pw.bentley.com:PWIDOT\Documents\IDOT Offices\District 4\Projects\D4_68A65\CADData\CADsheets\D468A65-sht-typical.dgn

USER NAME = $USER$	DESIGNED -	REVISED -	
	DRAWN -	REVISED -	
PLOT SCALE = 1:40	CHECKED -	REVISED -	
PLOT DATE = 2/14/2025	DATE -	REVISED -	

STATE OF ILLINOIS
DEPARTMENT OF TRANSPORTATION

TYPICAL SECTION

SCALE: | SHEET 4 OF 6 SHEETS | STA. | TO STA.

F.A.P. RTE.	SECTION	COUNTY	TOTAL SHEETS	SHEET NO.
693	118RS-8.W-2	TAZEWELL	292	45
		CONTRACT NO. 68A65		
		ILLINOIS FED. AID PROJECT		

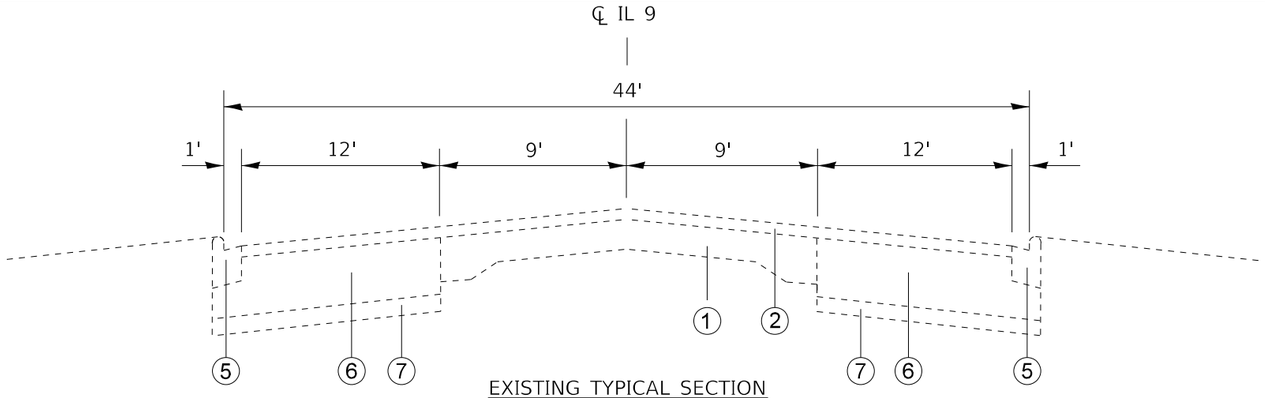

EXISTING TYPICAL SECTION
STA. 412+34 TO 438+50

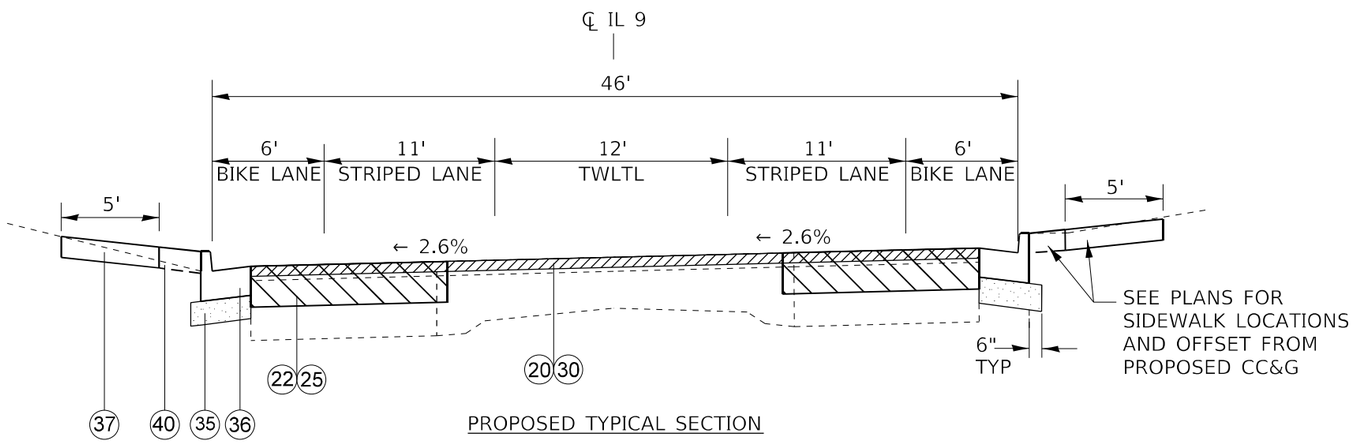

PROPOSED TYPICAL SECTION
STA. 412+42 TO 418+24.75

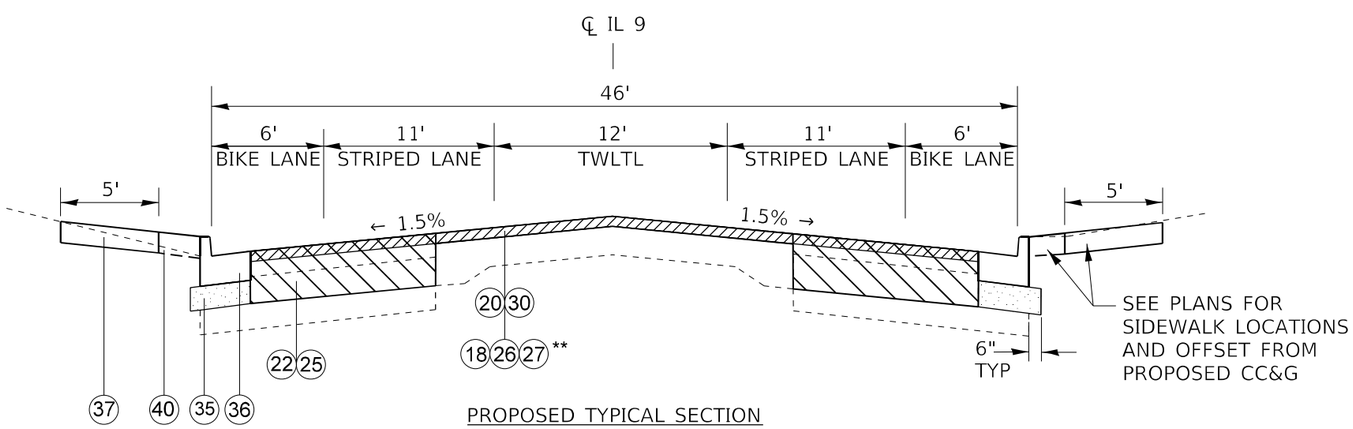

PROPOSED TYPICAL SECTION
STA. 418+24.75 TO 423+03.0
STA. 427+18.9 TO 435+04

** STA. 427+18.9 TO 430+14.0

LEGEND

EXISTING

1. PCC PAVEMENT 9-6-9
2. HOT-MIX ASPHALT OVERLAY
3. BASE COURSE WIDENING
4. AGGREGATE SHOULDER
5. CCC&G TY B6.12
6. BITUMINOUS SHOULDER (15")
7. SUB-BASE GRANULAR MATERIAL

PROPOSED

18. HMA SURFACE REMOVAL, VAR. DEPTH
19. HOT-MIX ASPHALT SURFACE REMOVAL, 1 1/4"
20. HOT-MIX ASPHALT SURFACE REMOVAL, 2"
21. PAVED SHOULDER REMOVAL (15")
22. PAVEMENT REMOVAL (11")
23. JOINT TRIMMING
24. HMA BASE COURSE, (8 1/4" LT SIDE & 9 3/4" RT SIDE)
25. HMA BASE COURSE, 11"
26. POLY. HMA IL 4.75 BINDER COURSE N50, 1.0"
27. HMA IL-9.5 BINDER COURSE N50, VARIES
28. HMA IL-19.0 BINDER COURSE N50, VARIES
29. POLY. HMA SURF. COURSE, MIX "E", N50, 1 3/4"
30. POLY. HMA SURF. COURSE, MIX "E", N50, 2"
31. HOT-MIX ASPHALT SHOULDERS, 8"
32. AGGREGATE SHOULDERS, TYPE B, 8"
33. STRIP CRACK CONTROL TREATMENT
34. AGGREGATE SUBGRADE IMPROVEMENT
35. SUBBASE GRANULAR MATERIAL, TYPE B
36. COMB. CONCRETE CURB & GUTTER, TY B-6.24
37. PCC SIDEWALK
38. MODIFIED URETHANE PAVEMENT MARKING
39. EMBANKMENT
40. TOPSOIL FURNISH & PLACE, 4"
41. HANDRAIL

TABLE FOR SUPERELEVATION

CURVE NO.	S.E. TRANSITION ATTAINED	FULL SUPER	RATE	S.E. TRANSITION REMOVED
	STA. TO STA.	STA. TO STA.		STA. TO STA.
1	STA. 411+47.12 TO STA. 412+59.62	STA. 412+59.62 TO STA. 417+12.3	2.61%	STA. 417+12.3 TO STA. 418+24.75
2	STA. 423+03.0 TO STA. 424+07.1	STA. 424+07.1 TO STA. 426+14.8	2.30%	STA. 426+14.8 TO STA. 427+18.9

MODEL: Default
FILE NAME: pw:\\ildot-pw.bentley.com:PWIDOT\Documents\IDOT Offices\District 4\Projects\D4_68A65\CADData\CADsheets\D468A65-sht-typical.dgn

USER NAME = $USER$	DESIGNED -	REVISED -
	DRAWN -	REVISED -
PLOT SCALE = 1:40	CHECKED -	REVISED -
PLOT DATE = 2/14/2025	DATE -	REVISED -

STATE OF ILLINOIS
DEPARTMENT OF TRANSPORTATION

TYPICAL SECTION

SCALE: | SHEET 5 OF 6 SHEETS | STA. TO STA.

F.A.P. RTE.	SECTION	COUNTY	TOTAL SHEETS	SHEET NO.
693	118RS-8,W-2	TAZEWELL	292	46

CONTRACT NO. 68A65
ILLINOIS | FED. AID PROJECT

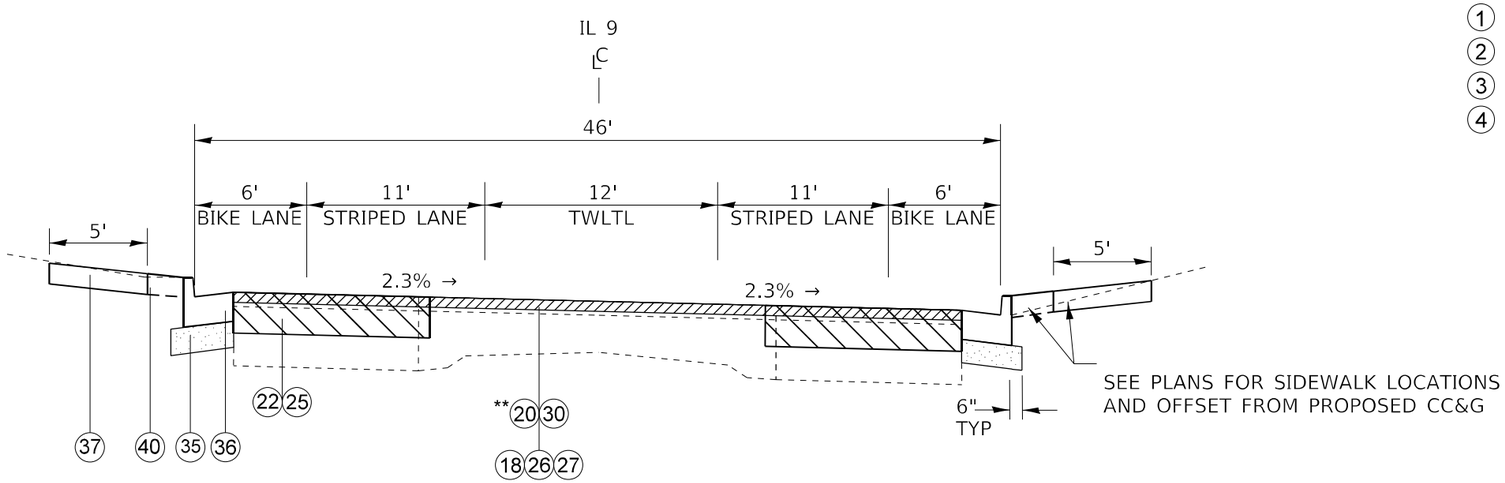

** STA. 424+03.0 TO 424+24

PROPOSED TYPICAL SECTION

STA. 423+03.0 TO 427+18.9

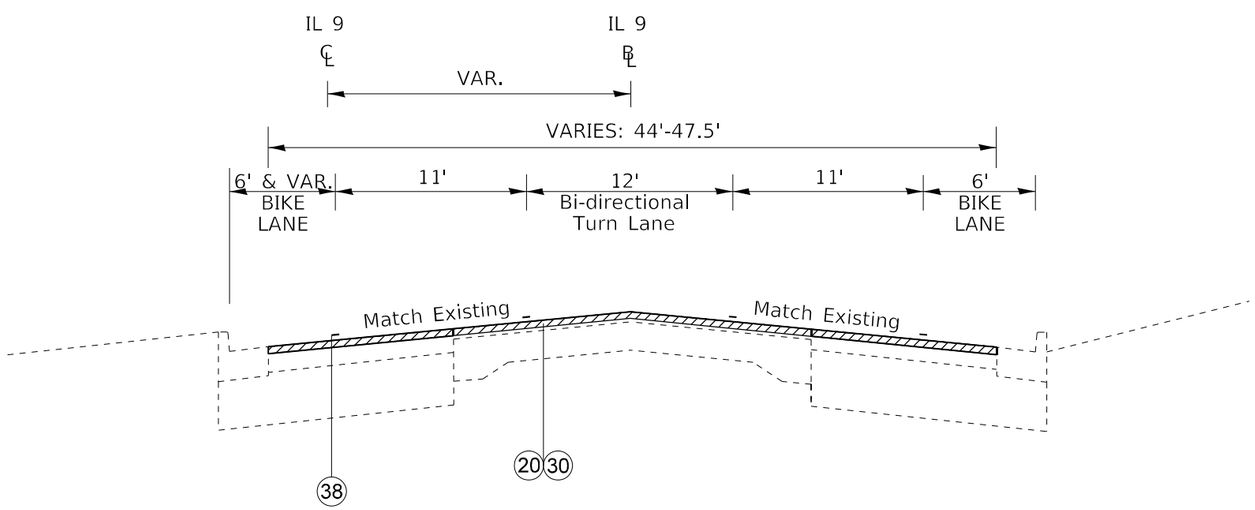

PROPOSED TYPICAL SECTION

STA. 435+04.09 TO 438+46.5

STA. EQN. STA. 435+04.09 BK = STA. 434+73.42 AH

LEGEND

EXISTING

1. PCC PAVEMENT 9-6-9
2. HOT-MIX ASPHALT OVERLAY
3. BASE COURSE WIDENING
4. AGGREGATE SHOULDER
5. CCC&G TY B6.12
6. BITUMINOUS SHOULDER (15")
7. SUB-BASE GRANULAR MATERIAL

PROPOSED

18. HMA SURFACE REMOVAL, VAR. DEPTH
19. HOT-MIX ASPHALT SURFACE REMOVAL, 1 1/4"
20. HOT-MIX ASPHALT SURFACE REMOVAL, 2"
21. PAVED SHOULDER REMOVAL (15")
22. PAVEMENT REMOVAL (11")
23. JOINT TRIMMING
24. HMA BASE COURSE, (8 1/4" LT SIDE & 9 3/4" RT SIDE)
25. HMA BASE COURSE, 11"
26. POLY. HMA IL 4.75 BINDER COURSE N50, 1.0"
27. HMA IL-9.5 BINDER COURSE N50, VARIES
28. HMA IL-19.0 BINDER COURSE N50, VARIES
29. POLY. HMA SURF. COURSE, MIX "E", N50, 1 3/4"
30. POLY. HMA SURF. COURSE, MIX "E", N50, 2"
31. HOT-MIX ASPHALT SHOULDERS, 8"
32. AGGREGATE SHOULDERS, TYPE B, 8"
33. STRIP CRACK CONTROL TREATMENT
34. AGGREGATE SUBGRADE IMPROVEMENT
35. SUBBASE GRANULAR MATERIAL, TYPE B
36. COMB. CONCRETE CURB & GUTTER, TY B-6.24
37. PCC SIDEWALK
38. MODIFIED URETHANE PAVEMENT MARKING
39. EMBANKMENT
40. TOPSOIL FURNISH & PLACE, 4"
41. HANDRAIL

TABLE FOR SUPERELEVATION

CURVE NO.	S.E. TRANSITION ATTAINED	FULL SUPER	RATE	S.E. TRANSITION REMOVED
	STA. TO STA.	STA. TO STA.		STA. TO STA.
1	STA. 411+47.12 TO STA. 412+59.62	STA. 412+59.62 TO STA. 417+12.3	2.61%	STA. 417+12.3 TO STA. 418+24.75
2	STA. 423+03.0 TO STA. 424+07.1	STA. 424+07.1 TO STA. 426+14.8	2.30%	STA. 426+14.8 TO STA. 427+18.9

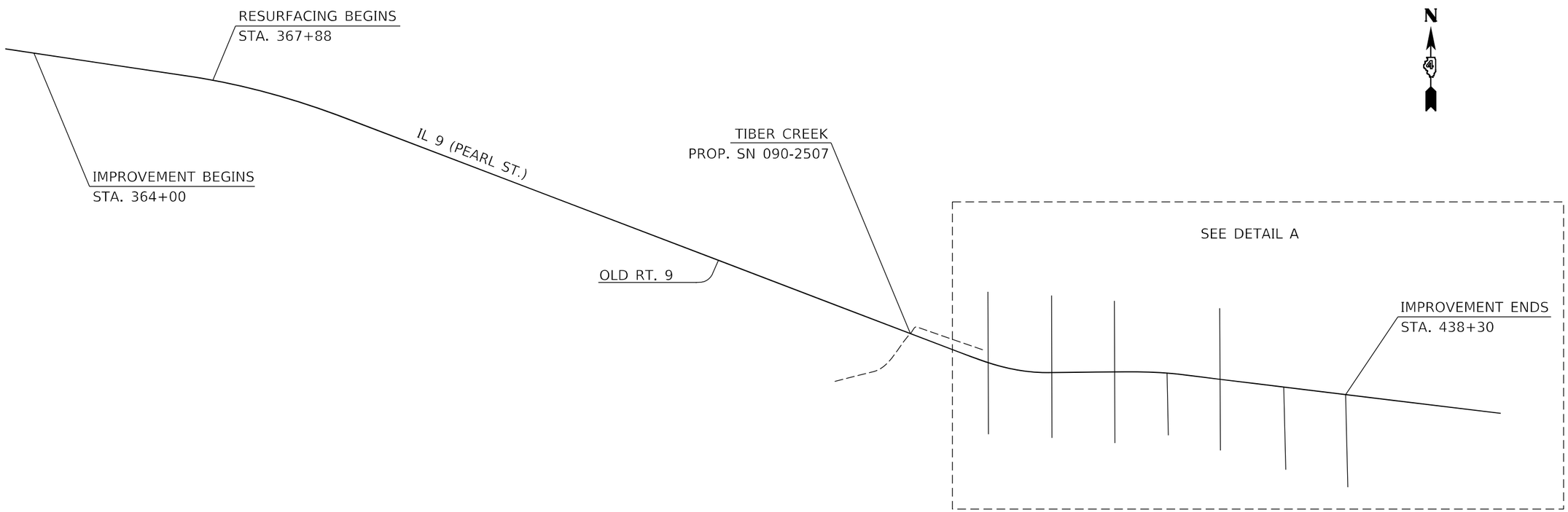

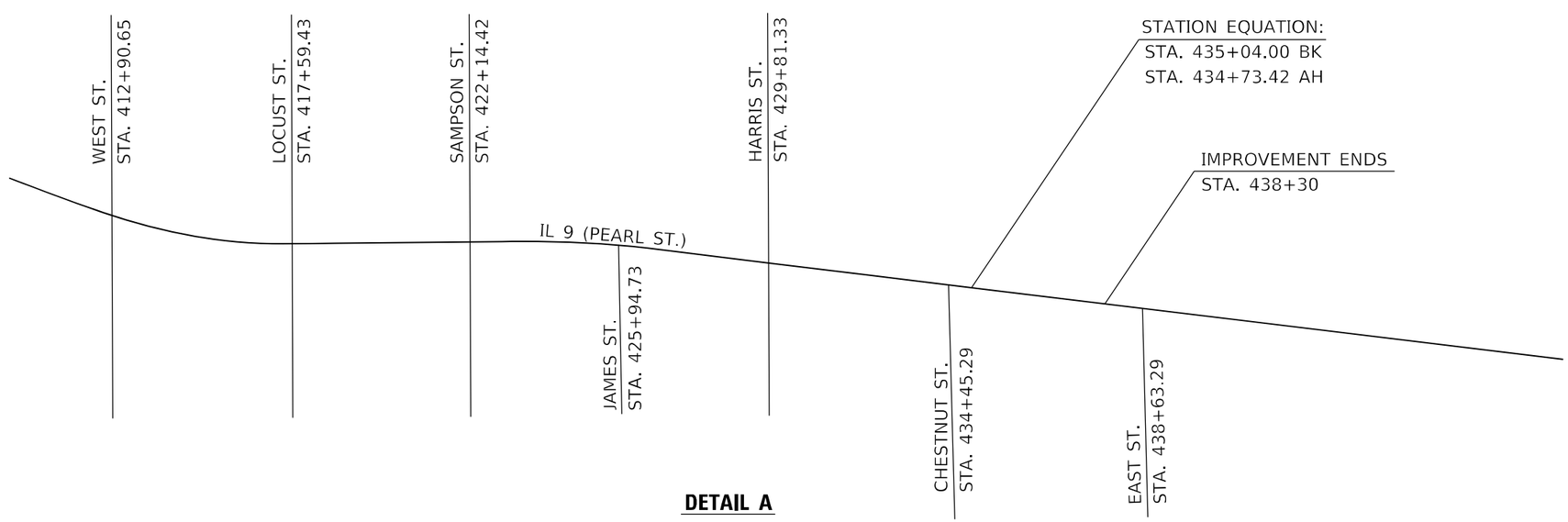

DETAIL A

TREMONT SIDE ROADS

MODEL: Default
FILE NAME: pw:\\ildot-pw.bentley.com:PWIDOT\Documents\IDOT Offices\District 4\Projects\D4_68A65\CADData\CADsheets\D468A65-lin-cover.dgn

USER NAME = $USER$	DESIGNED -	REVISED -	
	DRAWN -	REVISED -	
PLOT SCALE = 1:100	CHECKED -	REVISED -	
PLOT DATE = 2/14/2025	DATE -	REVISED -	

STATE OF ILLINOIS
DEPARTMENT OF TRANSPORTATION

LINE DIAGRAM

SCALE: | SHEET 1 OF 1 SHEETS | STA. | TO STA.

F.A.P. RTE.	SECTION	COUNTY	TOTAL SHEETS	SHEET NO.
693	118RS-8,W-2	TAZEWELL	292	48

CONTRACT NO. 68A65

ILLINOIS | FED. AID PROJECT

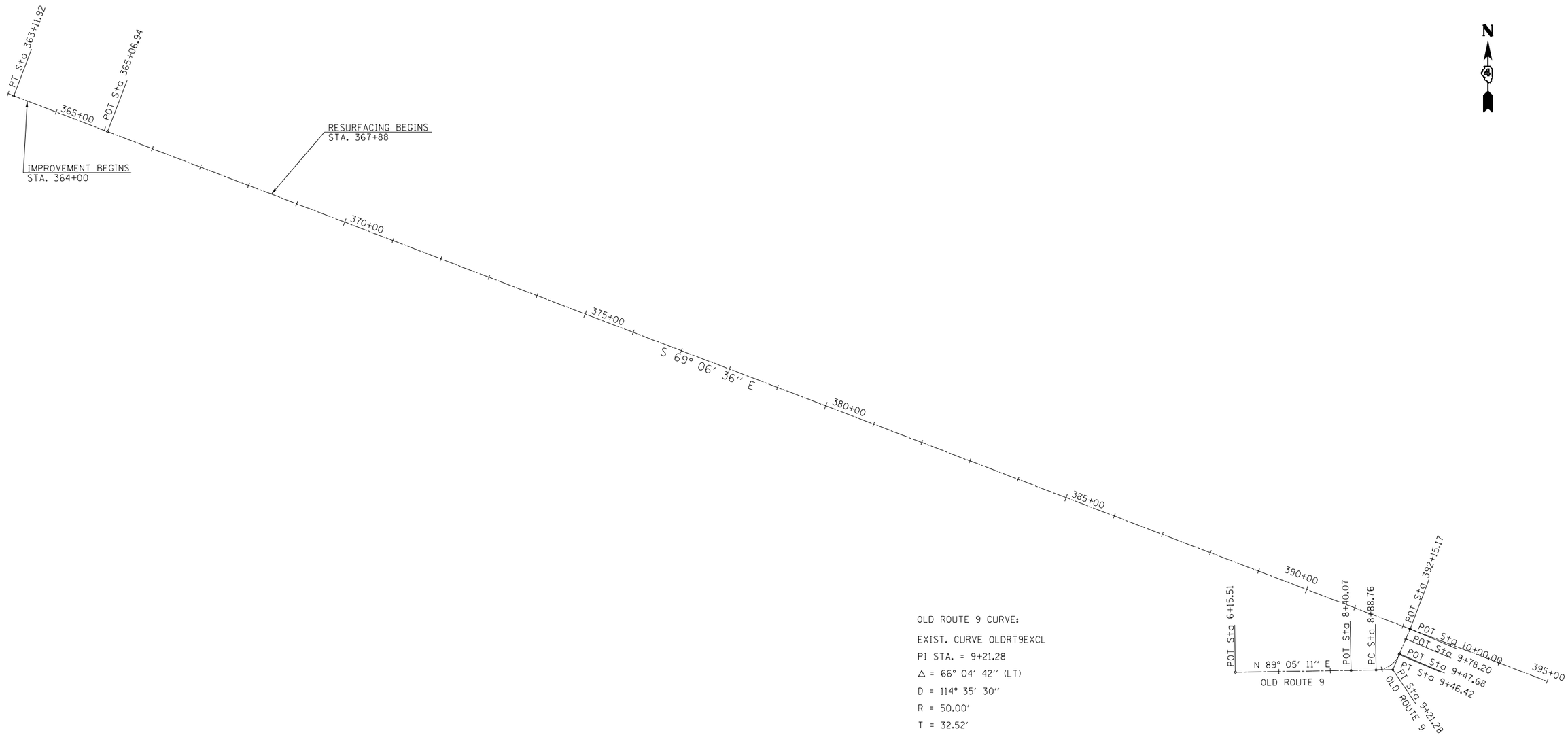

OLD ROUTE 9 CURVE:

EXIST. CURVE OLDRT9EXCL

PI STA. = 9+21.28

Δ = 66° 04′ 42′′ (LT)

D = 114° 35′ 30′′

R = 50.00′

T = 32.52′

L = 57.66′

E = 9.64′

e = _____

T.R. = _____

S.E. RUN = _____

P.C. STA. = 8+88.76

P.T. STA. = 9+46.42

MODEL: Default
FILE NAME: pw:\\ildot-pw.bentley.com:PWIDOT\Documents\IDOT Offices\District 4\Projects\D4_68A65\CADData\CADSheets\D468A65-sht-ATR.dgn

USER NAME = $USER$	DESIGNED -	REVISED -	
	DRAWN -	REVISED -	
PLOT SCALE = 1:200	CHECKED -	REVISED -	
PLOT DATE = 2/14/2025	DATE -	REVISED -	

STATE OF ILLINOIS
DEPARTMENT OF TRANSPORTATION

ALIGNMENT, TIES & BENCHMARKS

SCALE: | SHEET 1 OF 4 SHEETS | STA. TO STA.

F.A.P. RTE.	SECTION	COUNTY	TOTAL SHEETS	SHEET NO.
693	118RS-8.W-2	TAZEWELL	292	49
		CONTRACT NO. 68A65		
	ILLINOIS	FED. AID PROJECT		

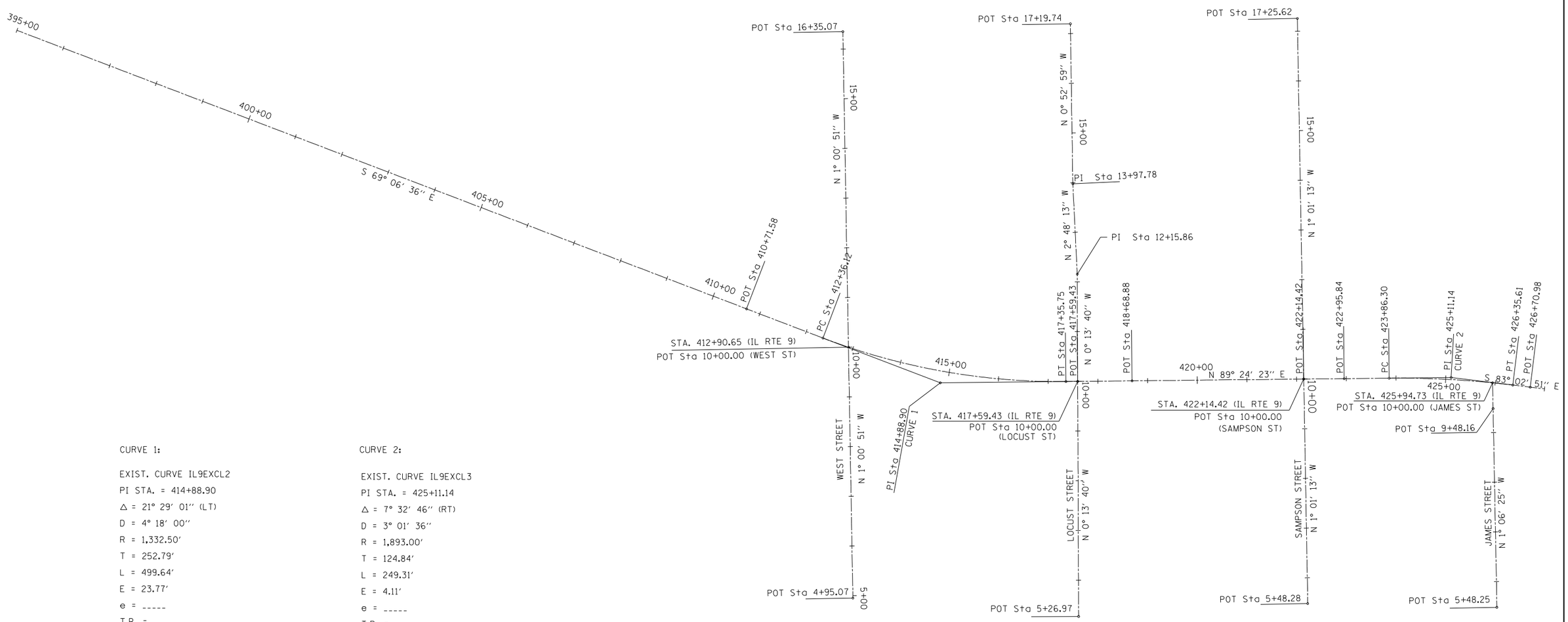

CURVE 1:

EXIST. CURVE IL9EXCL2
PI STA. = 414+88.90
Δ = 21° 29′ 01″ (LT)
D = 4° 18′ 00″
R = 1,332.50′
T = 252.79′
L = 499.64′
E = 23.77′
e = -----
T.R. = -----
S.E. RUN = -----
P.C. STA. = 412+36.12
P.T. STA. = 417+35.75

CURVE 2:

EXIST. CURVE IL9EXCL3
PI STA. = 425+11.14
Δ = 7° 32′ 46″ (RT)
D = 3° 01′ 36″
R = 1,893.00′
T = 124.84′
L = 249.31′
E = 4.11′
e = -----
T.R. = -----
S.E. RUN = -----
P.C. STA. = 423+86.30
P.T. STA. = 426+35.61

MODEL: Default
FILE NAME: pw:\\ildot-pw.bentley.com:PWIDOT\Documents\IDOT Offices\District 4\Projects\D4_68A65\CADData\CADsheets\D468A65-sht-ATB.dgn

USER NAME = $USER$	DESIGNED -	REVISED -	STATE OF ILLINOIS DEPARTMENT OF TRANSPORTATION
	DRAWN -	REVISED -	
PLOT SCALE = 1:200	CHECKED -	REVISED -	
PLOT DATE = 2/14/2025	DATE -	REVISED -	

ALIGNMENT, TIES & BENCHMARKS

SCALE: | SHEET 2 OF 4 SHEETS | STA. TO STA.

F.A.P. RTE.	SECTION	COUNTY	TOTAL SHEETS	SHEET NO.
693	118RS-8.W-2	TAZEWELL	292	50
		CONTRACT NO. 68A65		
		ILLINOIS FED. AID PROJECT		

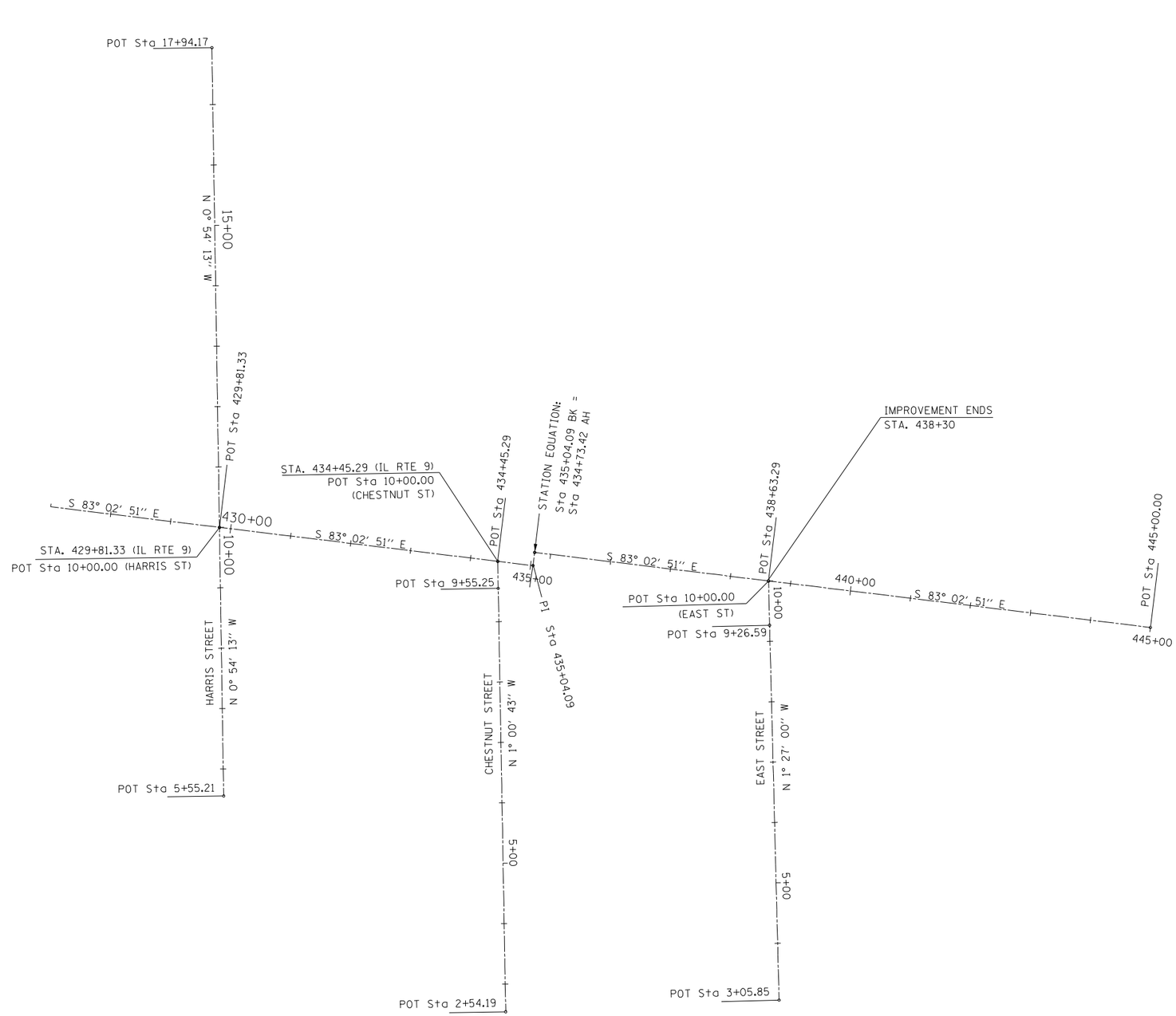

MODEL: Default
FILE NAME: pw:\\ildot-pw.bentley.com:PWIDOT\Documents\IDOT Offices\District 4\Projects\D4_68A65\CAD\Data\CADsheets\D468A65-sht-ATB.dgn

USER NAME = $USER$	DESIGNED -	REVISED -	
	DRAWN -	REVISED -	
PLOT SCALE = 1:200	CHECKED -	REVISED -	
PLOT DATE = 2/14/2025	DATE -	REVISED -	

STATE OF ILLINOIS
DEPARTMENT OF TRANSPORTATION

ALIGNMENT, TIES & BENCHMARKS

SCALE: | SHEET 3 OF 4 SHEETS | STA. TO STA.

F.A.P. RTE.	SECTION	COUNTY	TOTAL SHEETS	SHEET NO.
693	118RS-8.W-2	TAZEWELL	292	51
		CONTRACT NO. 68A65		
	ILLINOIS	FED. AID PROJECT		

CONTROL POINT 91223

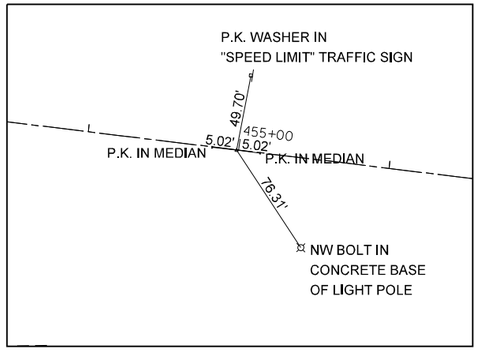

CONTROL POINT 91214

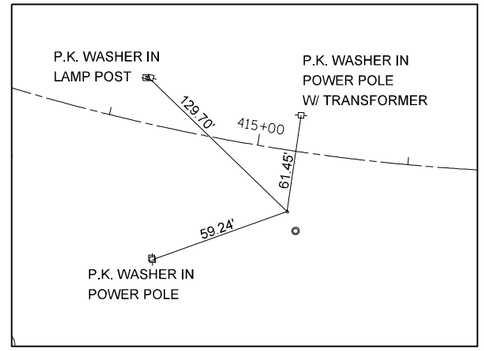

BENCH MARKS

B.M. #901 CHISELED "U" IN W. NOSE OF PCC ISLAND @ INT
OF IL 9 & I 155 SB EXIT RAMP, EAST OF TREMONT, STA. 457+15
ELEV. = 660.898

B.M. #902 CHISELED "U" IN CENTER OF PCC MEDIAN, +/- 10'
WEST NOSE, W SIDE OF INT OF IL 9 & PINE STREET, STA. 449+49
ELEV. = 658.033

B.M. #903 CHISELED "L" IN NE CORNER OF A 2' X 2' BOX CULVERT
N SIDE OF IL 9, +/- 75' E OF S CHESTNUT STREET
ELEV. = 645.754

B.M. #904 CHISELED "U" WEST END OF PCC WINGWALL FOR
BOX CULVERT UNDER SAMPSON ST, NE QUAD OF IL 9 & SAMPSON ST
ELEV. = 643.088

B.M. #905 APEX OF ROW MONUMENT 55' LT OF PAVEMENT, STA 597+30
ELEV. = 691.737

B.M. #906 N CAP BOLT F.H. @ EAST END OF CIRCLE DRIVE FOR TREMONT HIGH
PAVEMENT STA. 407+80 60' RT.
ELEV. = 638.566

B.M. #907 TOP EDGE OF CMP WEST SIDE (UNDER THE SUBWAY ENTRANCE)
PAVEMENT STA 397+50 33' RT
ELEV. = 633.787

B.M. #908 N CAP BOLT F.H. (CHISLED "+") @ PAVEMENT STA 390+03 42' RT
IN FRONT OF YOKELINN
ELEV. = 641.616

B.M. #909 CHISELED "U" IN CENTER 6" PCC HDWL FOR 2X2 BOX CULVERT
24' RT @ PAVEMENT STA 379+25
ELEV. = 636.740

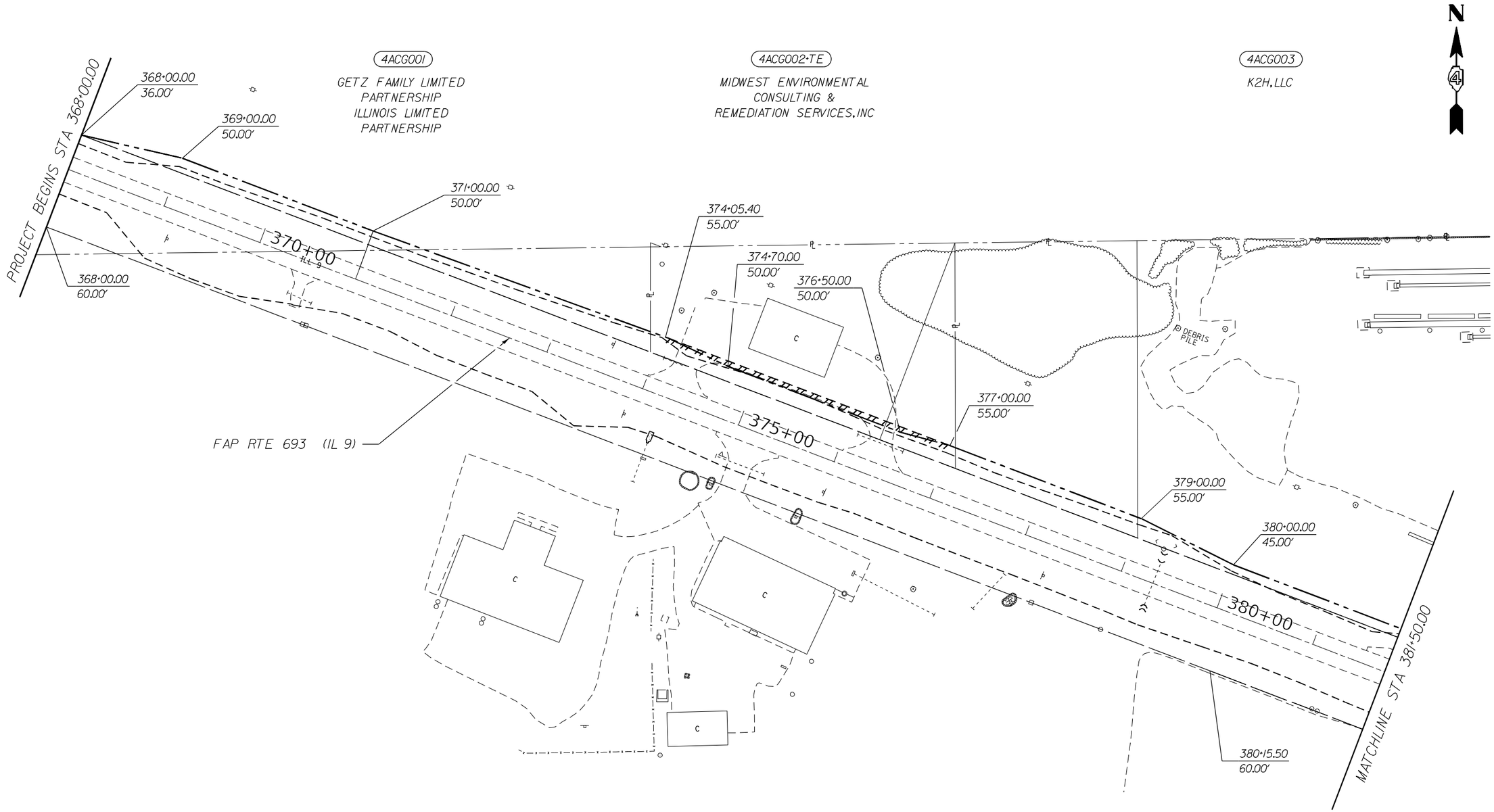

LEGEND:

- PROPOSED RIGHT OF WAY LINE
- PROPOSED TEMPORARY EASEMENT LINE
- EXISTING RIGHT OF WAY LINE

PLAT FILE 182

FOR OLD ROW SEE:
PLANFILE 21 PAGE(S) 28, 30, 32, 33

21 45

MODEL: Default
FILE NAME: pw:\\ildot-pw.bentley.com:PWIDOT\Documents\IDOT Offices\District 4\Projects\D4 68A65\CADData\LandAcqt Valle emsll 03-18-2020\D468A65-Property 04-15-21 BASE.dgn

USER NAME = $USER$	DESIGNED -	REVISED -	
	DRAWN -	REVISED -	
PLOT SCALE = 1:200	CHECKED -	REVISED -	
PLOT DATE = 2/14/2025	DATE -	REVISED -	

STATE OF ILLINOIS
DEPARTMENT OF TRANSPORTATION

RIGHT OF WAY PLAN SHEET

SCALE: 1" = 100' | SHEET 1 OF 6 SHEETS | STA. TO STA.

F.A.P. RTE.	SECTION	COUNTY	TOTAL SHEETS	SHEET NO.
693	118RS-8.W-2	TAZEWELL	292	53
	R-94-002-15	CONTRACT NO. 68A65		

CATALOG NO: 034713-00 | ILLINOIS | FED. AID PROJECT

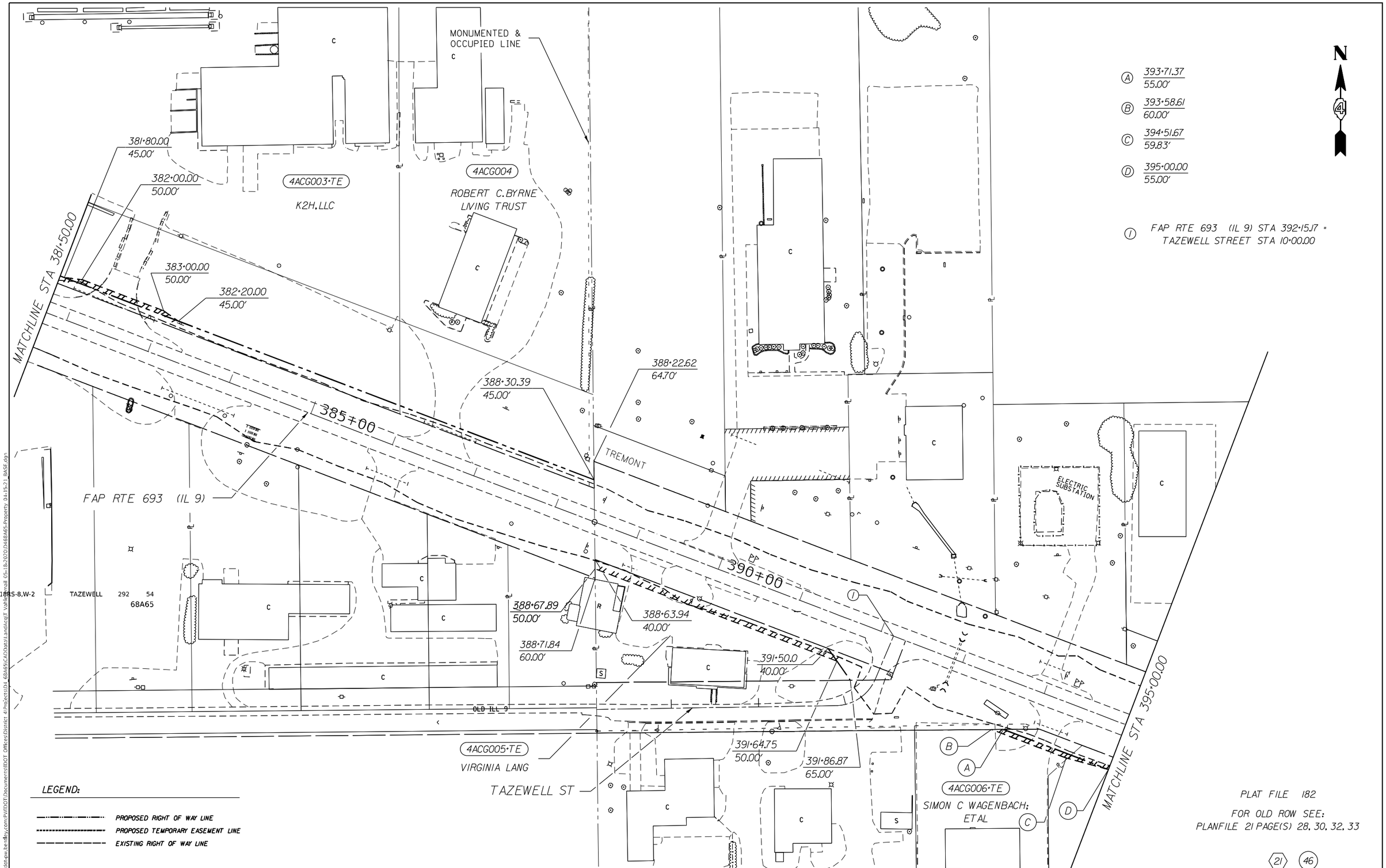

PLAT FILE 182

FOR OLD ROW SEE:
PLANFILE 21 PAGE(S) 28, 30, 32, 33

21 46

MODEL: Default
FILE NAME: pw:\\illinois-pw.bentley.com:PWIDOT\Documents\IDOT Offices\District 4\Projects\D4_68A65\CADData\LandAcq\T Vahlenhall 05-18-2020\D468A65-Property 04-15-21_BASE.dgn

USER NAME = $USER$	DESIGNED -	REVISED -	
	DRAWN -	REVISED -	
PLOT SCALE = 1:200	CHECKED -	REVISED -	
PLOT DATE = 2/14/2025	DATE -	REVISED -	

STATE OF ILLINOIS
DEPARTMENT OF TRANSPORTATION

RIGHT OF WAY PLAN SHEET

SCALE: 1" = 100' | SHEET 2 OF 6 SHEETS | STA. TO STA.

F.A.P. RTE.	SECTION	COUNTY	TOTAL SHEETS	SHEET NO.
693	118RS-8,W-2	TAZEWELL	292	54
R-94-002-15		CONTRACT NO. 68A65		
CATALOG NO: 034713-00	ILLINOIS	FED. AID PROJECT		

LEGEND:

- PROPOSED RIGHT OF WAY LINE
- PROPOSED TEMPORARY EASEMENT LINE
- EXISTING RIGHT OF WAY LINE

A	395+00.00 / 55.00'	H	400+40.00 / 70.00'	O	400+15.00 / 55.00'
B	396+00.00 / 50.00'	I	400+55.00 / 70.00'		
C	397+90.00 / 50.00'	J	400+66.75 / 65.00'		
D	399+16.10 / 46.06'	K	400+66.49 / 55.00'		
E	399+93.29 / 245.80'	L	400+68.64 / 139.08'		
F	400+07.22 / 236.66'	M	400+73.63 / 138.95'		
G	400+07.11 / 55.00'	N	400+74.99 / 192.10'		

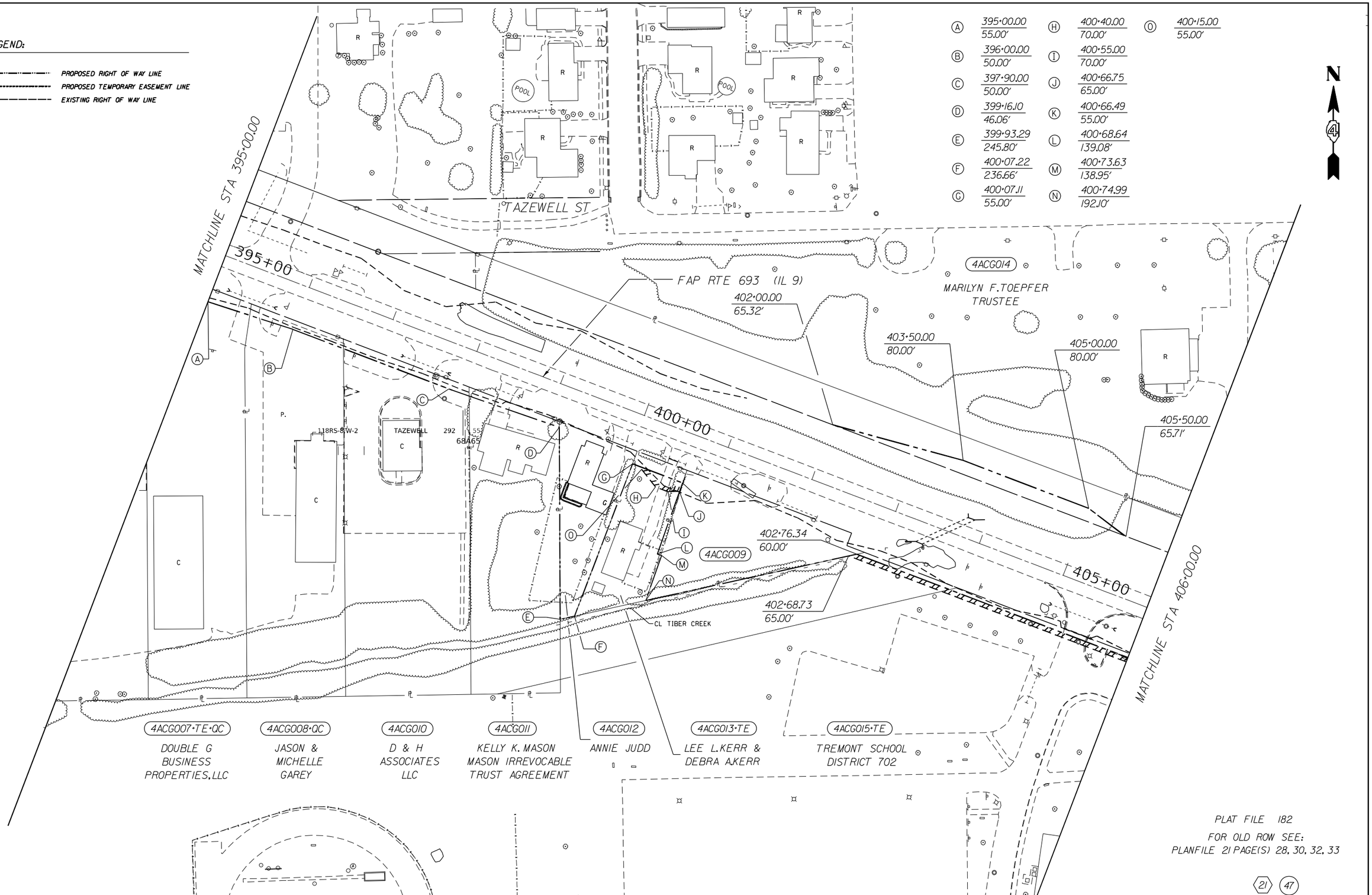

PLAT FILE 182

FOR OLD ROW SEE:
PLANFILE 21 PAGE(S) 28, 30, 32, 33

21 47

MODEL: Default
FILE NAME: pw:\\ildot-pw.bentley.com:PWIDOT\Documents\IDOT Offices\District 4\Projects\D4 68A65\CADData\Land\CoT Valle email 05-18-2020\468A65-Property 04-15-21 BASE.dgn

USER NAME = $USER$	DESIGNED -	REVISED -
	DRAWN -	REVISED -
PLOT SCALE = 1:200	CHECKED -	REVISED -
PLOT DATE = 2/14/2025	DATE -	REVISED -

STATE OF ILLINOIS
DEPARTMENT OF TRANSPORTATION

RIGHT OF WAY PLAN SHEET

SCALE: 1" = 100' | SHEET 3 OF 6 SHEETS | STA. TO STA.

F.A.P. RTE.	SECTION	COUNTY	TOTAL SHEETS	SHEET NO.
693	118RS-8.W-2	TAZEWELL	292	55
	R-94-002-15	CONTRACT NO. 68A65		
CATALOG NO: 034713-00	ILLINOIS	FED. AID PROJECT		

EXIST. CURVE IL9EXCL2
PI STA. = 414+88.90
Δ = 21° 29' 01" (LT)
D = 4° 18' 00"
R = 1,332.50'
T = 252.79'
L = 499.64'
E = 23.77'
e = -----
T.R. = -----
S.E. RUN = -----
P.C. STA. = 412+36.12
P.T. STA. = 417+35.75

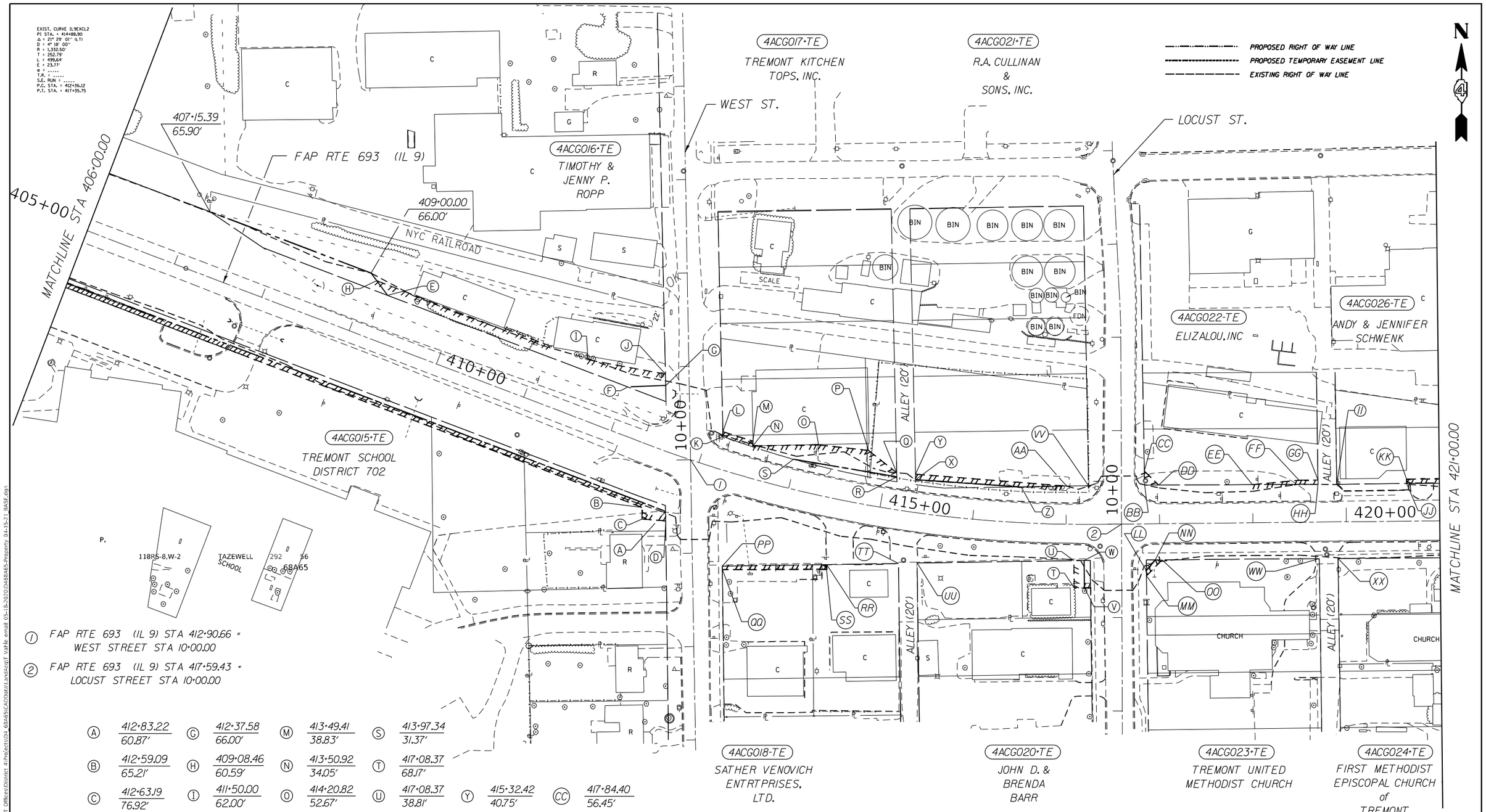

① FAP RTE 693 (IL 9) STA 412+90.66 = WEST STREET STA 10+00.00

② FAP RTE 693 (IL 9) STA 417+59.43 = LOCUST STREET STA 10+00.00

A	412+83.22 / 60.87'	G	412+37.58 / 66.00'	M	413+49.41 / 38.83'	S	413+97.34 / 31.37'														
B	412+59.09 / 65.21'	H	409+08.46 / 60.59'	N	413+50.92 / 34.05'	T	417+08.37 / 68.17'														
C	412+63.19 / 76.92'	I	411+50.00 / 62.00'	O	414+20.82 / 52.67'	U	417+08.37 / 38.81'	Y	415+32.42 / 40.75'	CC	417+84.40 / 56.45'										
D	412+86.47 / 70.52'	J	412+32.95 / 77.18'	P	414+76.82 / 57.65'	V	417+19.82 / 68.17'	Z	416+47.78 / 38.23'	DD	417+99.51 / 41.37'	GG	419+70.11 / 45.00'	JJ	420+64.98 / 40.28'	MM	417+85.47 / 55.64'	PP	413+54.44 / 98.86'	SS	414+57.03 / 75.82'	VV	417+24.15 / 41.42'
E	409+25.00 / 50.00'	K	413+16.31 / 34.50'	Q	415+11.75 / 39.33'	W	417+19.40 / 38.55'	AA	416+99.34 / 40.85'	EE	419+00.00 / 40.81'	HH	419+70.14 / 40.42'	KK	420+64.91 / 45.00'	NN	417+95.00 / 38.61'	QQ	413+55.40 / 102.34'	TT	415+28.16 / 56.40'	WW	419+70.73 / 39.11'
F	412+00.00 / 50.00'	L	413+14.67 / 39.24'	R	415+12.55 / 35.00'	X	415+33.39 / 35.00'	BB	417+84.51 / 41.45'	FF	419+50.00 / 45.00'	II	419+90.13 / 40.31'	LL	417+85.46 / 50.00'	OO	418+02.49 / 38.63'	RR	414+56.06 / 70.82'	UU	415+47.14 / 53.33'	XX	419+90.73 / 39.17'

PLAT FILE 182
FOR OLD ROW SEE:
PLANFILE 21 PAGE(S) 28, 30, 32, 33

21 48

MODEL: Default
FILE NAME: pw:\\ildot-pw.bentley.com:PWIDOT\Documents\IDOT Offices\District 4\Projects\D4_68A65\CADData\landacqT Vahle emsll 05-18-2020\D468A65-Property 04-15-21 BASE.dgn

USER NAME = $USER$	DESIGNED -	REVISED -	
	DRAWN -	REVISED -	
PLOT SCALE = 1:200	CHECKED -	REVISED -	
PLOT DATE = 2/14/2025	DATE -	REVISED -	

STATE OF ILLINOIS
DEPARTMENT OF TRANSPORTATION

RIGHT OF WAY PLAN SHEET

SCALE: 1" = 100' | SHEET 4 OF 6 SHEETS | STA. TO STA.

F.A.P. RTE.	SECTION	COUNTY	TOTAL SHEETS	SHEET NO.
693	118RS-8,W-2	TAZEWELL	292	56
R-94-002-15		CONTRACT NO. 68A65		

CATALOG NO: 034713-00 | ILLINOIS | FED. AID PROJECT

LEGEND:

- PROPOSED RIGHT OF WAY LINE
- PROPOSED TEMPORARY EASEMENT LINE
- EXISTING RIGHT OF WAY LINE

(1) FAP RTE 693 (IL 9) STA 422+14.42 = SAMPSON STREET STA 10+00.00

(2) FAP RTE 693 (IL 9) STA 425+94.73 = JAMES STREET STA 10+00.00

(3) FAP RTE 693 (IL 9) STA 429+81.33 = HARRIS STREET STA 10+00.00

EXIST. CURVE IL9EXCL3
PI STA. = 425+11.14
Δ = 7° 32′ 46″ (RT)
D = 3° 01′ 36″
R = 1,893.00′
T = 124.84′
L = 249.31′
E = 4.11′
e = -----
T.R. = -----
S.E. RUN = -----
P.C. STA. = 423+86.30
P.T. STA. = 426+35.61

(A)	421+65.00 / 39.66′	(O)	426+41.98 / 38.00′
(B)	421+55.41 / 39.63′	(P)	429+45.53 / 31.26′
(C)	421+76.13 / 60.39′	(Q)	429+46.50 / 38.00′
(D)	421+76.08 / 50.00′	(R)	430+37.00 / 31.55′
(E)	421+75.32 / 45.00′	(S)	430+28.02 / 43.00′
(F)	421+75.35 / 40.24′	(T)	430+28.93 / 49.36′
(G)	422+65.00 / 39.52′	(U)	429+36.11 / 34.77′
(H)	422+56.08 / 50.00′	(V)	422+55.35 / 40.36′
(I)	422+56.10 / 54.14′	(W)	425+50.96 / 51.75′
(J)	424+96.05 / 33.31′	(X)	426+31.65 / 35.72′
(K)	425+59.14 / 31.00′	(Y)	430+30.03 / 33.00′
(L)	425+44.81 / 43.88′	(Z)	430+12.45 / 70.83′
(M)	425+61.90 / 57.66′	(AA)	430+38.80 / 38.00′
(N)	426+40.90 / 30.32′		

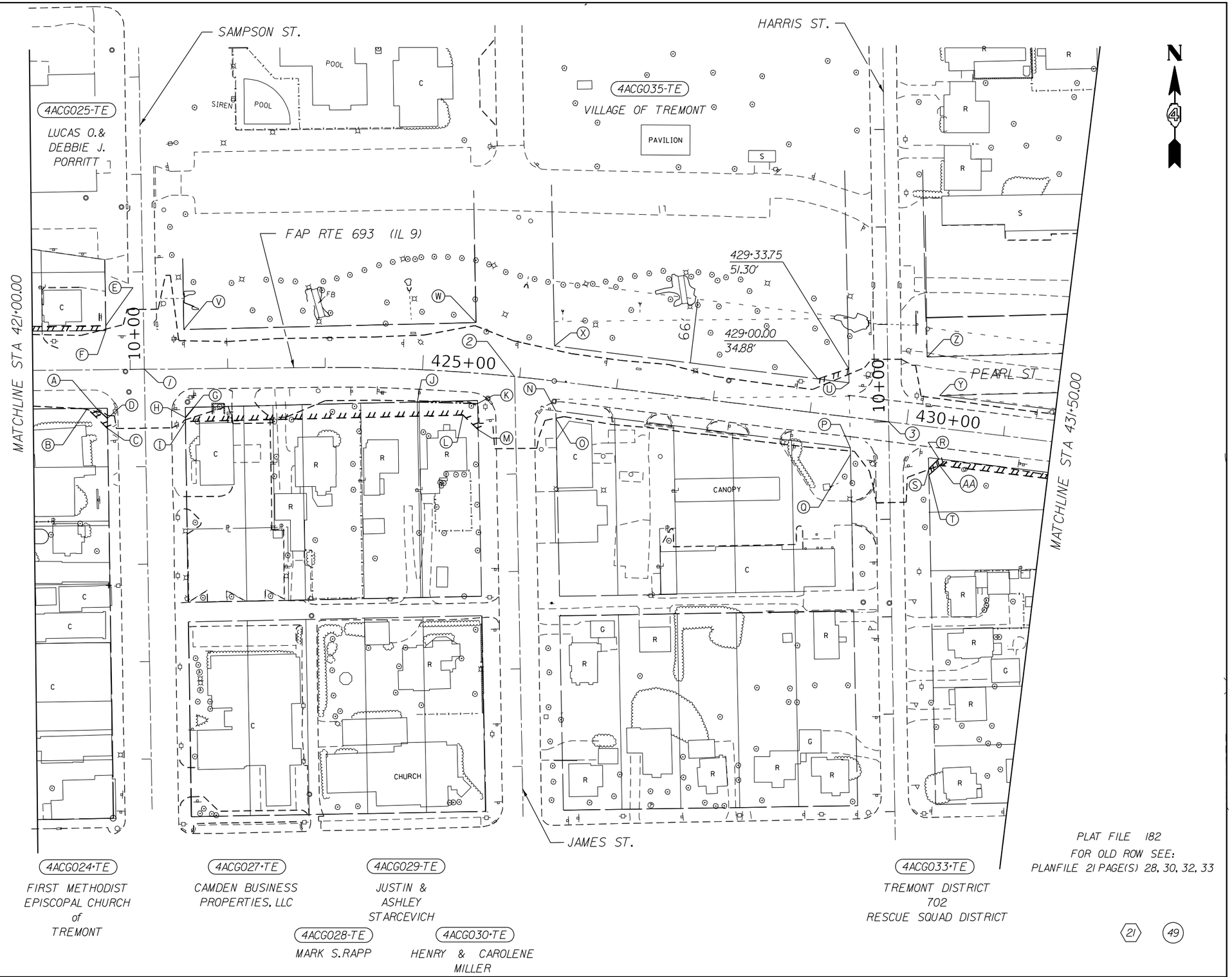

PLAT FILE 182
FOR OLD ROW SEE:
PLANFILE 21 PAGE(S) 28, 30, 32, 33

21 49

USER NAME = $USER$	DESIGNED -	REVISED -	
	DRAWN -	REVISED -	
PLOT SCALE = 1:200	CHECKED -	REVISED -	
PLOT DATE = 2/14/2025	DATE -	REVISED -	

STATE OF ILLINOIS
DEPARTMENT OF TRANSPORTATION

RIGHT OF WAY PLAN SHEET

SCALE: 1" = 100' | SHEET 5 OF 6 SHEETS | STA. TO STA.

F.A.P. RTE.	SECTION	COUNTY	TOTAL SHEETS	SHEET NO.
693	118RS-8,W-2	TAZEWELL	292	57
	R-94-002-15	CONTRACT NO. 68A65		
CATALOG NO: 034713-00	ILLINOIS	FED. AID PROJECT		

MODEL: Default
FILE NAME: pw:\\ildot-pw.bentley.com:PWIDOT\Documents\IDOT Offices\District 4\Projects\D4_68A65\CADData\LandAcqt Valle email 05-15-2020\D468A65-Property 04-15-21_BASE.dgn

LEGEND:

- PROPOSED RIGHT OF WAY LINE
- PROPOSED TEMPORARY EASEMENT LINE
- EXISTING RIGHT OF WAY LINE

A	432+14.14 / 38.00'
B	432+13.32 / 32.10'
C	432+33.52 / 32.16'
D	432+34.33 / 38.00'
E	434+19.97 / 32.74'
F	434+20.68 / 38.00'
G	432+04.22 / 33.00'
H	432+24.40 / 33.00'
I	434+11.04 / 33.00'
J	434+73.42 / 81.60'
K	434+86.22 / 74.45'
L	435+03.82 / 54.55'
M	435+04.09 / 72.98'
N	435+72.29 / 81.22'

1. FAP RTE 693 (IL 9) STA 434+45.29 = CHESTNUT STREET STA 10+00.00
2. FAP RTE 693 (IL 9) STA 438+63.29 = EAST STREET STA 10+00.00

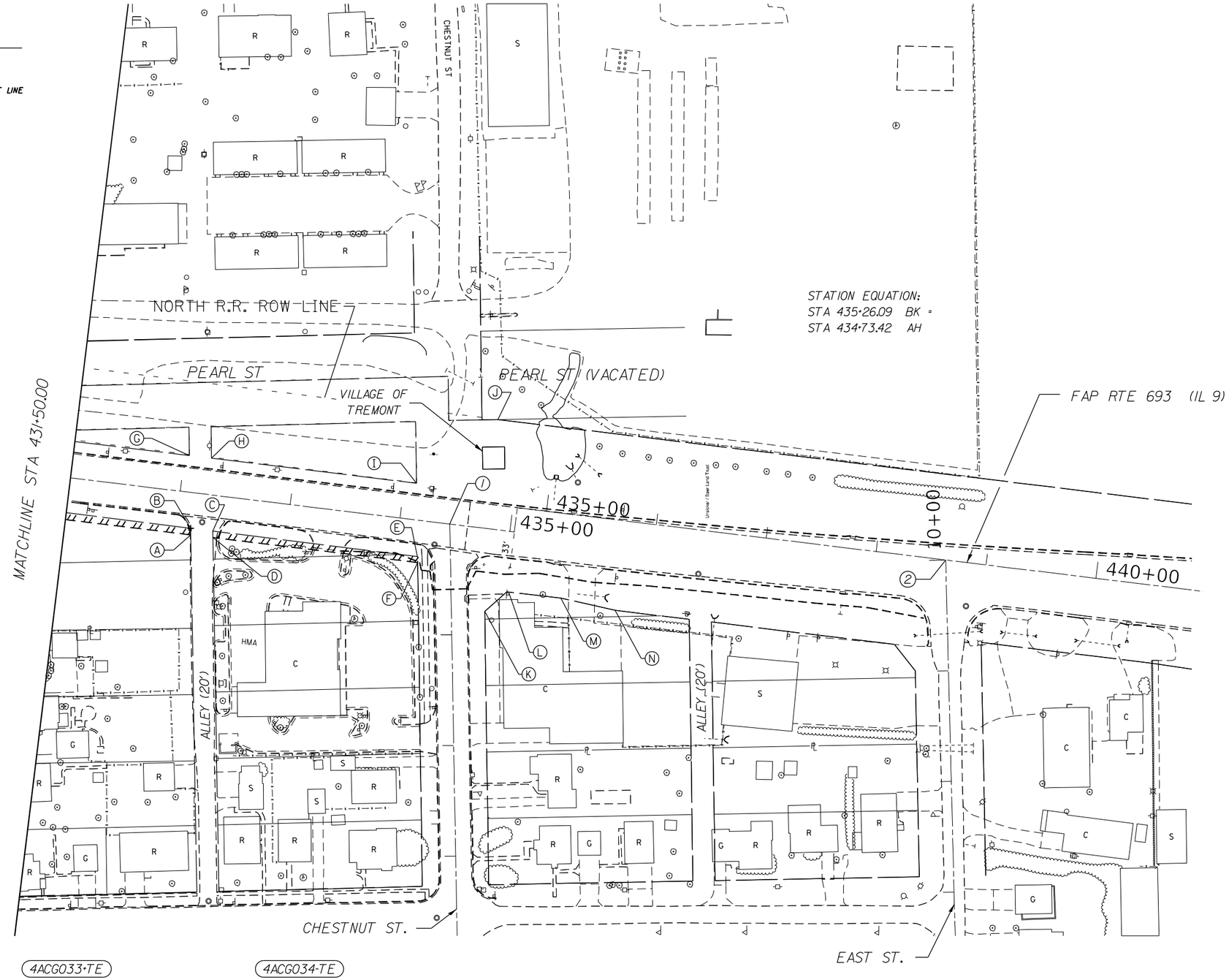

PLAT FILE 182

FOR OLD ROW SEE:
PLANFILE 21 PAGE(S) 28, 30, 32, 33

21 50

MODEL: Default
FILE NAME: pw:\\illiot-pw.bentley.com:PWIDOT\Documents\IDOT Offices\District 4\Projects\D4_68A65\CADData\Land\acqT Vahle email 05-18-2020\D468A65-Property 04-15-21_BASE.dgn

USER NAME = $USER$	DESIGNED -	REVISED -	
	DRAWN -	REVISED -	
PLOT SCALE = 1:200	CHECKED -	REVISED -	
PLOT DATE = 2/14/2025	DATE -	REVISED -	

STATE OF ILLINOIS
DEPARTMENT OF TRANSPORTATION

RIGHT OF WAY PLAN SHEET

SCALE: 1" = 100' | SHEET 6 OF 6 SHEETS | STA. TO STA.

F.A.P. RTE.	SECTION	COUNTY	TOTAL SHEETS	SHEET NO.
693	118RS-8,W-2	TAZEWELL	292	58
R-94-002-15		CONTRACT NO. 68A65		

CATALOG NO: 034713-00 | ILLINOIS | FED. AID PROJECT

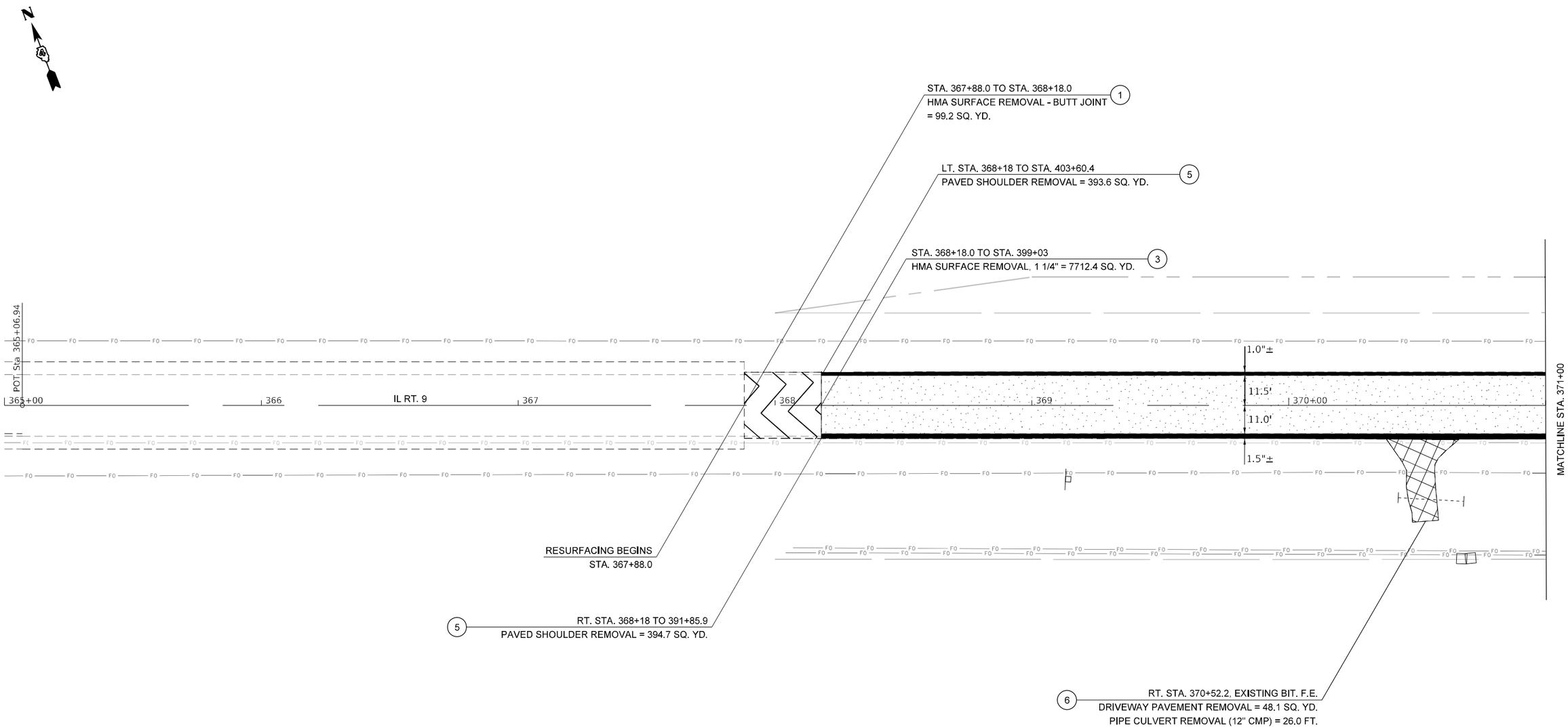

LEGEND

1. HMA SURFACE REMOVAL, BUTT-JOINT
2. PAVEMENT REMOVAL
3. HMA SURFACE REMOVAL
4. SIDEWALK REMOVAL
5. PAVED SHOULDER REMOVAL
6. DRIVEWAY PAVEMENT REMOVAL
7. PAVEMENT PATCHING (SEE SCHEDULES FOR TYPE)
8. TREE REMOVAL

PROPOSED R.O.W.
EXISTING R.O.W.
PROPOSED T.E.

PLAN NOTES:

1. SEE SPECIAL PROVISION FOR NON-SPECIAL WASTE PRIOR TO ANY EXCAVATION WORK
2. SEE SCHEDULE FOR SIGN REMOVAL LOCATIONS
3. PAVEMENT REMOVAL SHALL CONSIST OF REMOVING THE EXISTING 4-5" HMA SURFACE AND 6-7" OF THE CRUSHED STONE BASE FROM STA. 412+42 TO 435+04 (SEE TYPICALS)
4. PAVED SHOULDER REMOVAL MATERIAL MAY INCLUDE HMA AND PCC
5. FOR ADDITIONAL REMOVAL ITEMS, SEE DRAINAGE SHEETS

0 20 40 60
SCALE IN FEET

MODEL: Default
FILE NAME: pw:\\ildot-pw.bentley.com:PWIDOT\Documents\IDOT Offices\District 4\Project\D4_68A65\CADData\CADsheets\D468A65-sht-removal.dgn

USER NAME = $USER$	DESIGNED -	REVISED -
	DRAWN -	REVISED -
PLOT SCALE = 1:40	CHECKED -	REVISED -
PLOT DATE = 3/13/2025	DATE -	REVISED -

STATE OF ILLINOIS
DEPARTMENT OF TRANSPORTATION

EXISTING UTILITIES & REMOVAL PLANS

SCALE: | SHEET 1 OF 13 SHEETS | STA. TO STA.

F.A.P. RTE.	SECTION	COUNTY	TOTAL SHEETS	SHEET NO.
693	118RS-8,W-2	TAZEWELL	292	59
		CONTRACT NO. 68A65		
	ILLINOIS	FED. AID PROJECT		

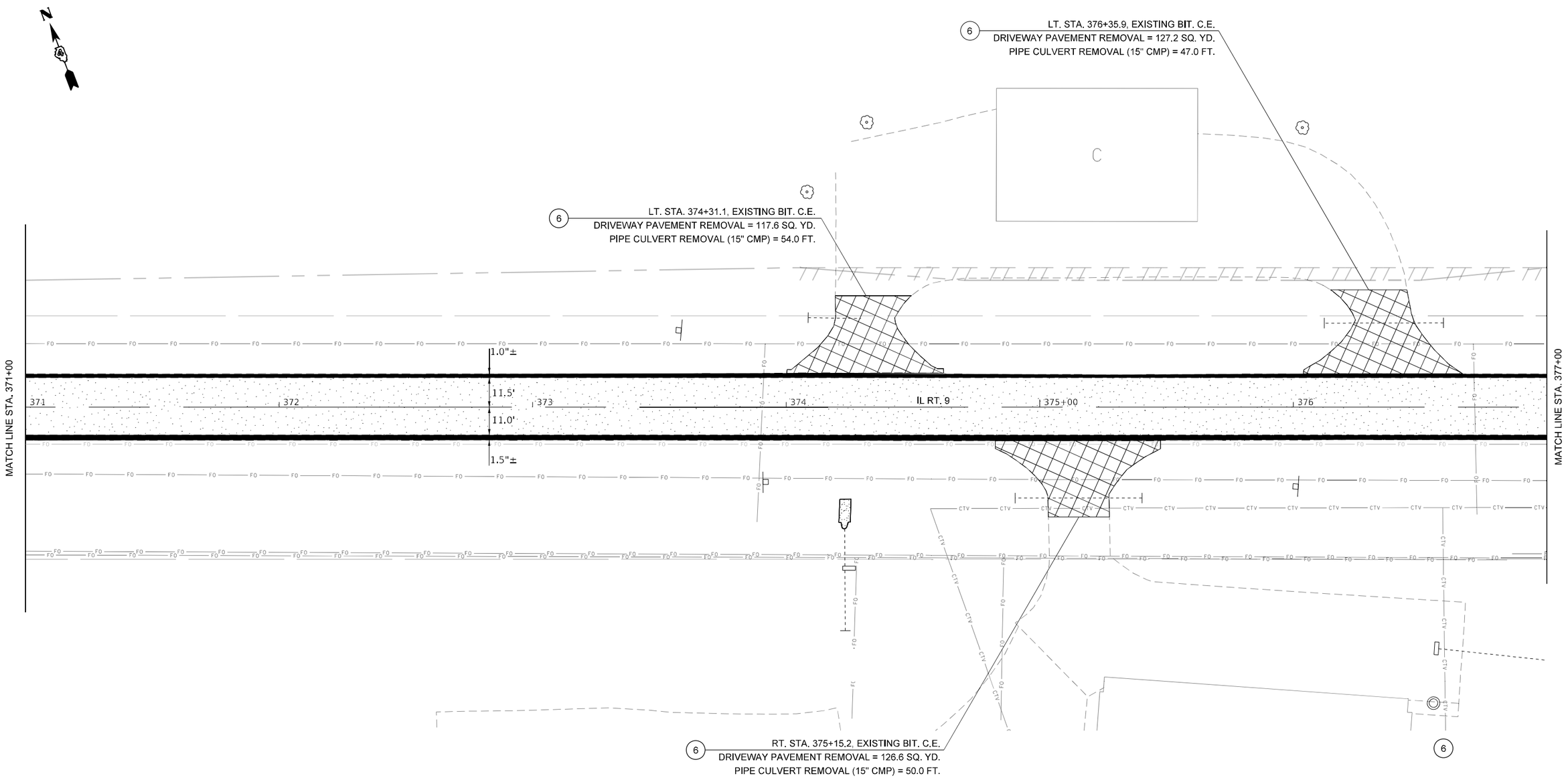

LEGEND

1 HMA SURFACE REMOVAL, BUTT-JOINT	5 PAVED SHOULDER REMOVAL	PROPOSED R.O.W.	
2 PAVEMENT REMOVAL	6 DRIVEWAY PAVEMENT REMOVAL	EXISTING R.O.W.	
3 HMA SURFACE REMOVAL	7 PAVEMENT PATCHING (SEE SCHEDULES FOR TYPE)	PROPOSED T.E.	
4 SIDEWALK REMOVAL	8 TREE REMOVAL		

PLAN NOTES:

1. SEE SPECIAL PROVISION FOR NON-SPECIAL WASTE PRIOR TO ANY EXCAVATION WORK
2. SEE SCHEDULE FOR SIGN REMOVAL LOCATIONS
3. PAVEMENT REMOVAL SHALL CONSIST OF REMOVING THE EXISTING 4-5" HMA SURFACE AND 6-7" OF THE CRUSHED STONE BASE FROM STA. 412+42 TO 435+04 (SEE TYPICALS)
4. PAVED SHOULDER REMOVAL MATERIAL MAY INCLUDE HMA AND PCC
5. FOR ADDITIONAL REMOVAL ITEMS, SEE DRAINAGE SHEETS

0 20 40 60
SCALE IN FEET

MODEL: Default
FILE NAME: pw:\\ildot-pw.bentley.com:PWIDOT\Documents\IDOT Offices\District 4\Projects\D4 68A65\CADData\CADsheets\D468A65-ilk-removal.dgn

USER NAME = $USER$	DESIGNED -	REVISED -	
	DRAWN -	REVISED -	
PLOT SCALE = 1:40	CHECKED -	REVISED -	
PLOT DATE = 2/14/2025	DATE -	REVISED -	

STATE OF ILLINOIS
DEPARTMENT OF TRANSPORTATION

EXISTING UTILITIES & REMOVAL PLANS

SCALE: | SHEET 2 OF 13 SHEETS | STA. | TO STA.

F.A.P. RTE.	SECTION	COUNTY	TOTAL SHEETS	SHEET NO.
693	118RS-8,W-2	TAZEWELL	292	60
		CONTRACT NO. 68A65		
		ILLINOIS	FED. AID PROJECT	

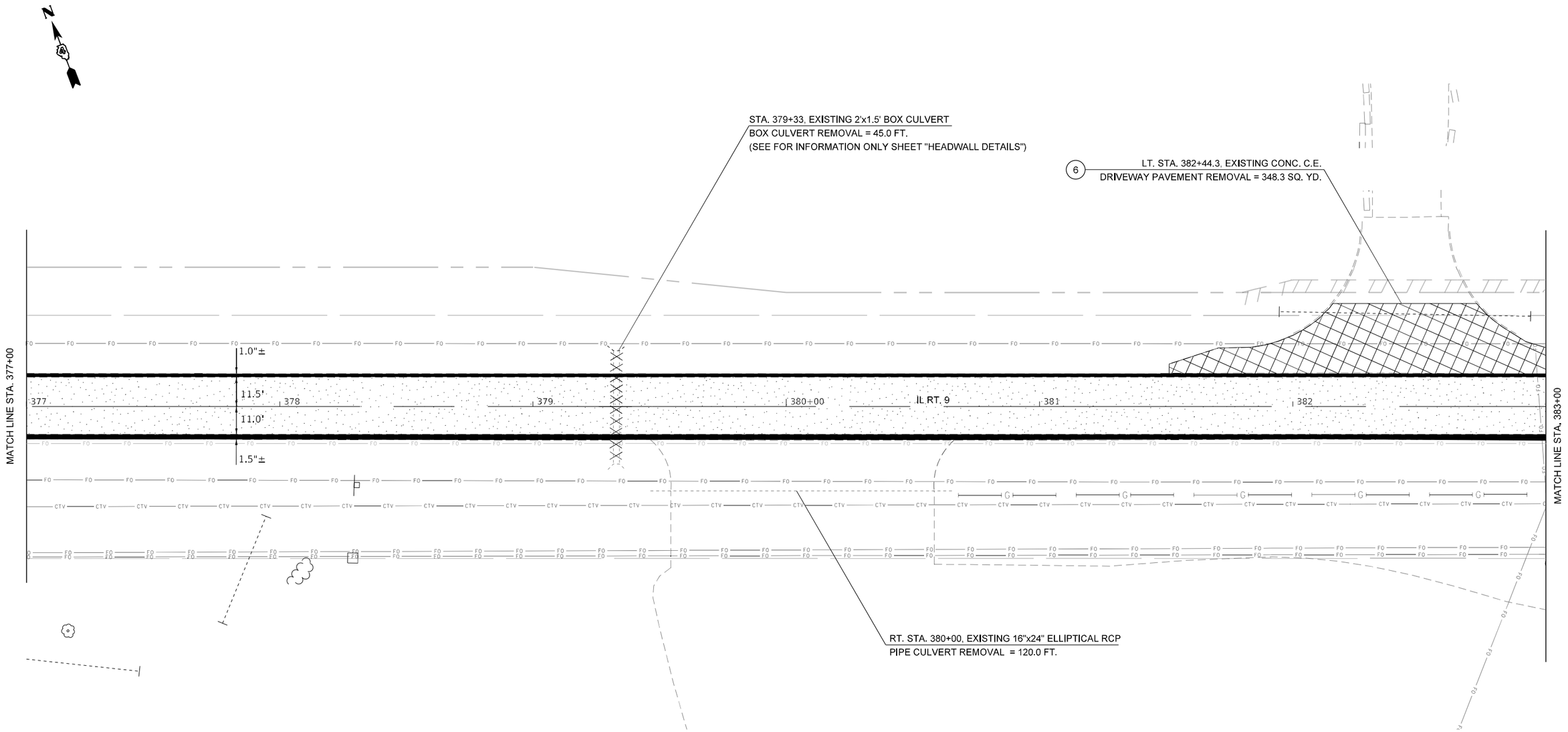

LEGEND

1	HMA SURFACE REMOVAL, BUTT-JOINT	5	PAVED SHOULDER REMOVAL		PROPOSED R.O.W.
2	PAVEMENT REMOVAL	6	DRIVEWAY PAVEMENT REMOVAL		EXISTING R.O.W.
3	HMA SURFACE REMOVAL	7	PAVEMENT PATCHING (SEE SCHEDULES FOR TYPE)		PROPOSED T.E.
4	SIDEWALK REMOVAL	8	TREE REMOVAL		

PLAN NOTES:

1. SEE SPECIAL PROVISION FOR NON-SPECIAL WASTE PRIOR TO ANY EXCAVATION WORK
2. SEE SCHEDULE FOR SIGN REMOVAL LOCATIONS
3. PAVEMENT REMOVAL SHALL CONSIST OF REMOVING THE EXISTING 4-5" HMA SURFACE AND 6-7" OF THE CRUSHED STONE BASE FROM STA. 412+42 TO 435+04 (SEE TYPICALS)
4. PAVED SHOULDER REMOVAL MATERIAL MAY INCLUDE HMA AND PCC
5. FOR ADDITIONAL REMOVAL ITEMS, SEE DRAINAGE SHEETS

0 20 40 60
SCALE IN FEET

MODEL: Default
FILE NAME: pw:\\ildot-pw.bentley.com:PWIDOT\Documents\IDOT Offices\District 4\Projects\D4_68A65\CADData\CADsheets\D468A65-sht-removal.dgn

USER NAME = $USER$	DESIGNED -	REVISED -
	DRAWN -	REVISED -
PLOT SCALE = 1:40	CHECKED -	REVISED -
PLOT DATE = 2/14/2025	DATE -	REVISED -

STATE OF ILLINOIS
DEPARTMENT OF TRANSPORTATION

EXISTING UTILITIES & REMOVAL PLANS

SCALE: | SHEET 3 OF 13 SHEETS | STA. TO STA.

F.A.P. RTE.	SECTION	COUNTY	TOTAL SHEETS	SHEET NO.
693	118RS-8,W-2	TAZEWELL	292	61
		CONTRACT NO. 68A65		
		ILLINOIS	FED. AID PROJECT	

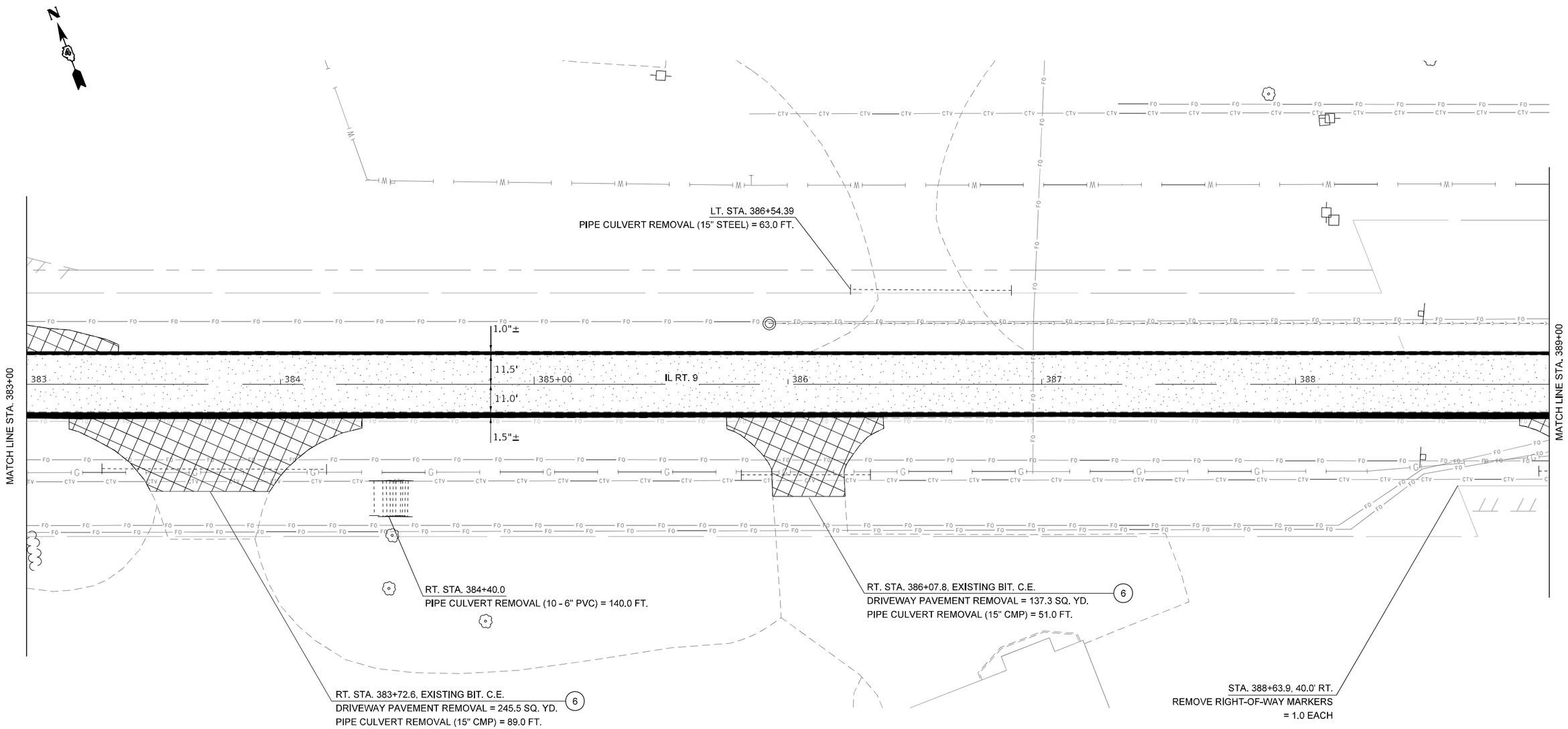

LEGEND

1 HMA SURFACE REMOVAL, BUTT-JOINT		5 PAVED SHOULDER REMOVAL		PROPOSED R.O.W.	
2 PAVEMENT REMOVAL		6 DRIVEWAY PAVEMENT REMOVAL		EXISTING R.O.W.	
3 HMA SURFACE REMOVAL		7 PAVEMENT PATCHING (SEE SCHEDULES FOR TYPE)		PROPOSED T.E.	
4 SIDEWALK REMOVAL		8 TREE REMOVAL			

PLAN NOTES:

1. SEE SPECIAL PROVISION FOR NON-SPECIAL WASTE PRIOR TO ANY EXCAVATION WORK
2. SEE SCHEDULE FOR SIGN REMOVAL LOCATIONS
3. PAVEMENT REMOVAL SHALL CONSIST OF REMOVING THE EXISTING 4-5" HMA SURFACE AND 6-7" OF THE CRUSHED STONE BASE FROM STA. 412+42 TO 435+04 (SEE TYPICALS)
4. PAVED SHOULDER REMOVAL MATERIAL MAY INCLUDE HMA AND PCC
5. FOR ADDITIONAL REMOVAL ITEMS, SEE DRAINAGE SHEETS

0 20 40 60
SCALE IN FEET

MODEL: Default
FILE NAME: pw:\\ildot-pw.bentley.com:PWIDOT\Documents\IDOT Offices\District 4\Projects\D4_68A65\CADData\CADsheets\D468A65-lnt-removal.dgn

USER NAME = $USER$	DESIGNED -	REVISED -
	DRAWN -	REVISED -
PLOT SCALE = 1:40	CHECKED -	REVISED -
PLOT DATE = 2/14/2025	DATE -	REVISED -

STATE OF ILLINOIS
DEPARTMENT OF TRANSPORTATION

EXISTING UTILITIES & REMOVAL PLANS

SCALE: | SHEET 4 OF 13 SHEETS | STA. TO STA.

F.A.P. RTE.	SECTION	COUNTY	TOTAL SHEETS	SHEET NO.
693	118RS-8,W-2	TAZEWELL	292	62

CONTRACT NO. 68A65

ILLINOIS | FED. AID PROJECT

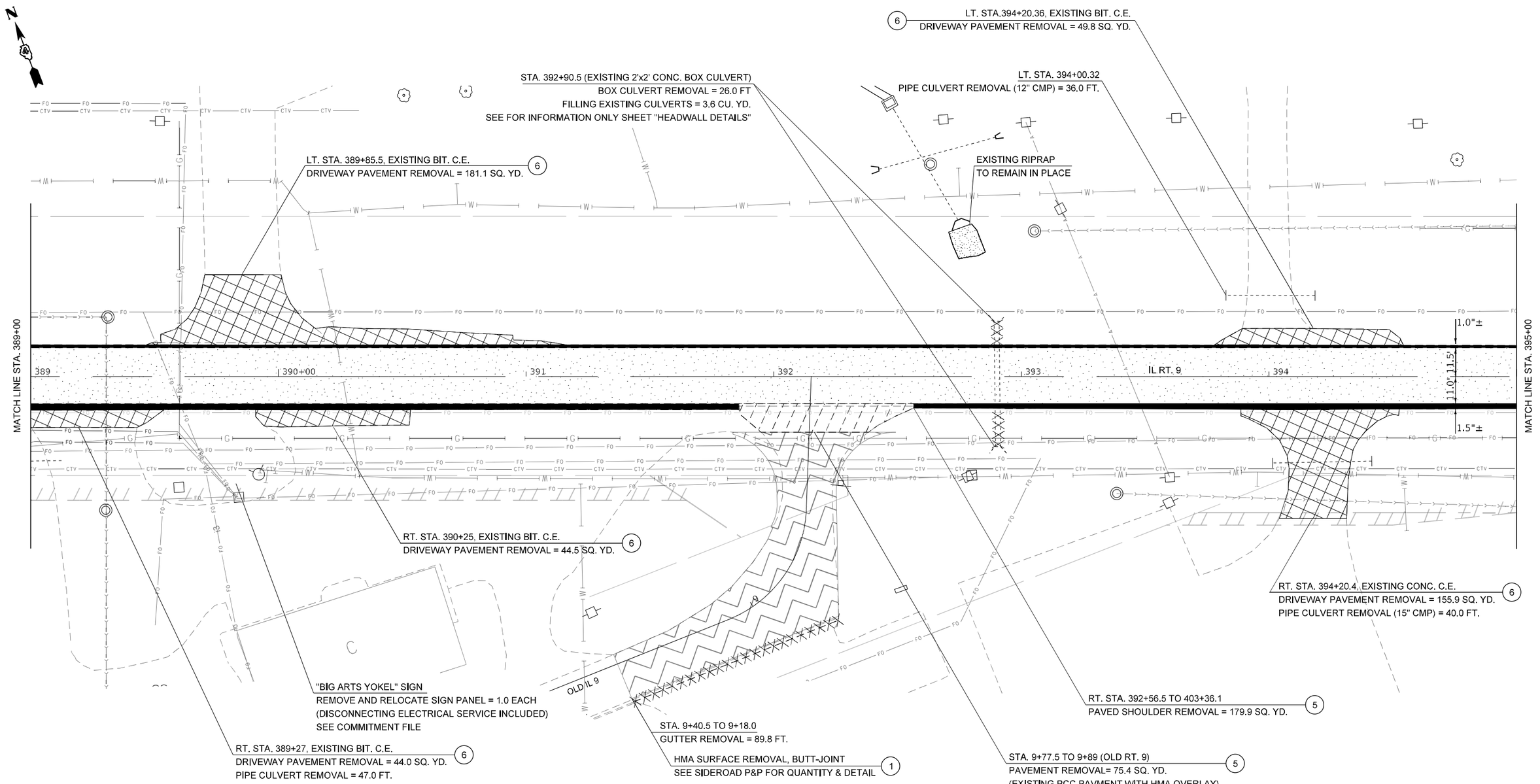

LEGEND

1	HMA SURFACE REMOVAL, BUTT-JOINT	5	PAVED SHOULDER REMOVAL		PROPOSED R.O.W.
2	PAVEMENT REMOVAL	6	DRIVEWAY PAVEMENT REMOVAL		EXISTING R.O.W.
3	HMA SURFACE REMOVAL	7	PAVEMENT PATCHING (SEE SCHEDULES FOR TYPE)		PROPOSED T.E.
4	SIDEWALK REMOVAL	8	TREE REMOVAL		

PLAN NOTES:

1. SEE SPECIAL PROVISION FOR NON-SPECIAL WASTE PRIOR TO ANY EXCAVATION WORK
2. SEE SCHEDULE FOR SIGN REMOVAL LOCATIONS
3. PAVEMENT REMOVAL SHALL CONSIST OF REMOVING THE EXISTING 4-5" HMA SURFACE AND 6-7" OF THE CRUSHED STONE BASE FROM STA. 412+42 TO 435+04 (SEE TYPICALS)
4. PAVED SHOULDER REMOVAL MATERIAL MAY INCLUDE HMA AND PCC
5. FOR ADDITIONAL REMOVAL ITEMS, SEE DRAINAGE SHEETS

0 20 40 60
SCALE IN FEET

MODEL: Default
FILE NAME: pw:\\ildot-pw.bentley.com:PWIDOT\Documents\IDOT Offices\District 4\Projects\D4_68A65\CADData\CADsheets\D468A65-sht-removal.dgn

USER NAME = $USER$	DESIGNED -	REVISED -
	DRAWN -	REVISED -
PLOT SCALE = 1:40	CHECKED -	REVISED -
PLOT DATE = 3/13/2025	DATE -	REVISED -

STATE OF ILLINOIS
DEPARTMENT OF TRANSPORTATION

EXISTING UTILITIES & REMOVAL PLANS

SCALE: | SHEET 5 OF 13 SHEETS | STA. TO STA.

F.A.P. RTE.	SECTION	COUNTY	TOTAL SHEETS	SHEET NO.
693	118RS-8,W-2	TAZEWELL	292	63
		CONTRACT NO. 68A65		
		ILLINOIS	FED. AID PROJECT	

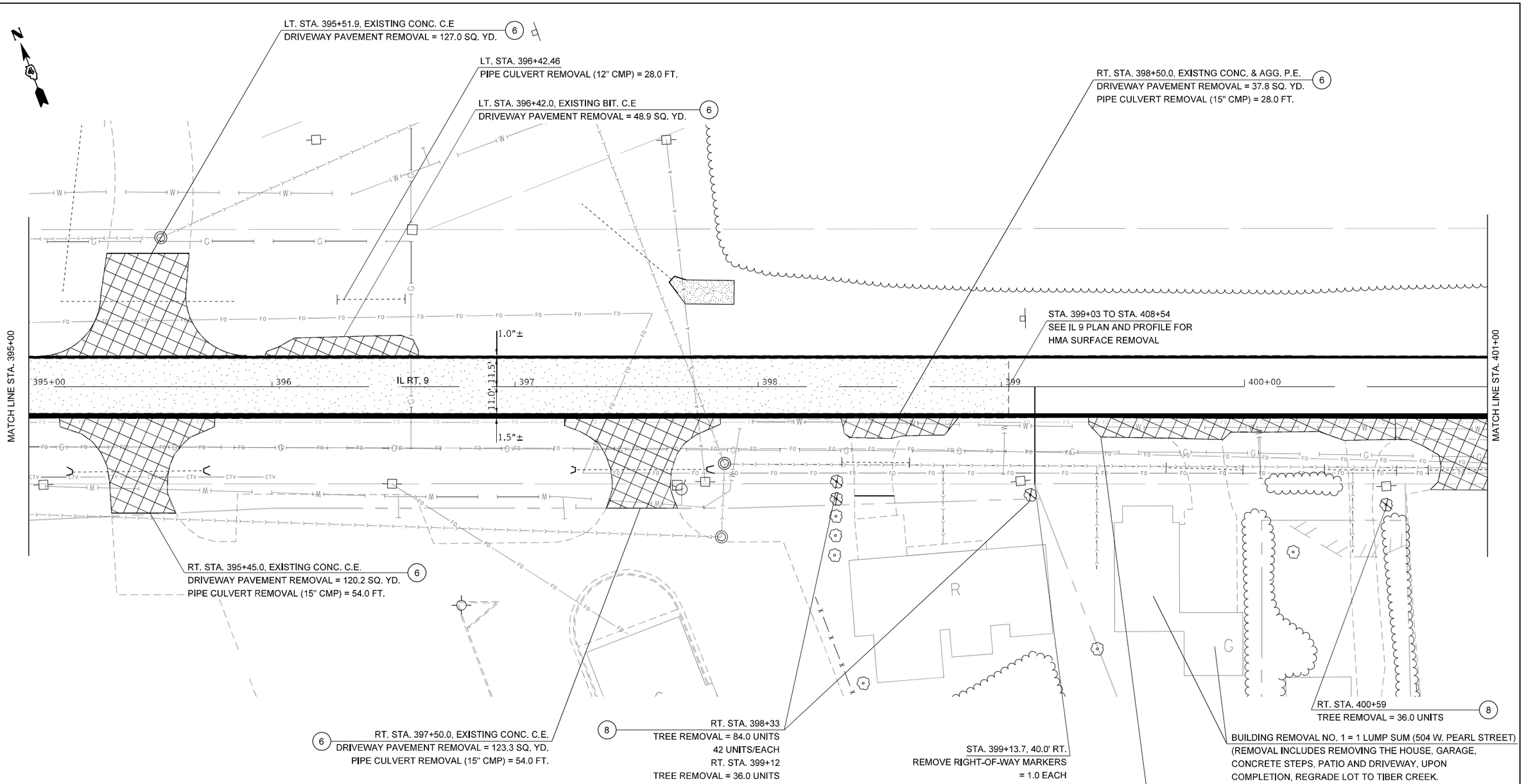

LEGEND

1. HMA SURFACE REMOVAL, BUTT-JOINT
2. PAVEMENT REMOVAL
3. HMA SURFACE REMOVAL
4. SIDEWALK REMOVAL
5. PAVED SHOULDER REMOVAL
6. DRIVEWAY PAVEMENT REMOVAL
7. PAVEMENT PATCHING (SEE SCHEDULES FOR TYPE)
8. TREE REMOVAL

PROPOSED R.O.W.
EXISTING R.O.W.
PROPOSED T.E.

PLAN NOTES:

1. SEE SPECIAL PROVISION FOR NON-SPECIAL WASTE PRIOR TO ANY EXCAVATION WORK
2. SEE SCHEDULE FOR SIGN REMOVAL LOCATIONS
3. PAVEMENT REMOVAL SHALL CONSIST OF REMOVING THE EXISTING 4-5" HMA SURFACE AND 6-7" OF THE CRUSHED STONE BASE FROM STA. 412+42 TO 435+04 (SEE TYPICALS)
4. PAVED SHOULDER REMOVAL MATERIAL MAY INCLUDE HMA AND PCC
5. FOR ADDITIONAL REMOVAL ITEMS, SEE DRAINAGE SHEETS

0 20 40 60
SCALE IN FEET

USER NAME = $USER$	DESIGNED -	REVISED -
	DRAWN -	REVISED -
PLOT SCALE = 1:40	CHECKED -	REVISED -
PLOT DATE = 3/13/2025	DATE -	REVISED -

STATE OF ILLINOIS
DEPARTMENT OF TRANSPORTATION

EXISTING UTILITIES & REMOVAL PLANS

SCALE: | SHEET 6 OF 13 SHEETS | STA. TO STA.

F.A.P. RTE.	SECTION	COUNTY	TOTAL SHEETS	SHEET NO.
693	118RS-8.W-2	TAZEWELL	292	64

CONTRACT NO. 68A65
ILLINOIS | FED. AID PROJECT

MODEL: Default
FILE NAME: pw:\\ildot-pw.bentley.com:PWIDOT\Documents\IDOT Offices\District 4\Projects\D4_68A65\CADData\CADsheets\D468A65-sht-removal.dgn

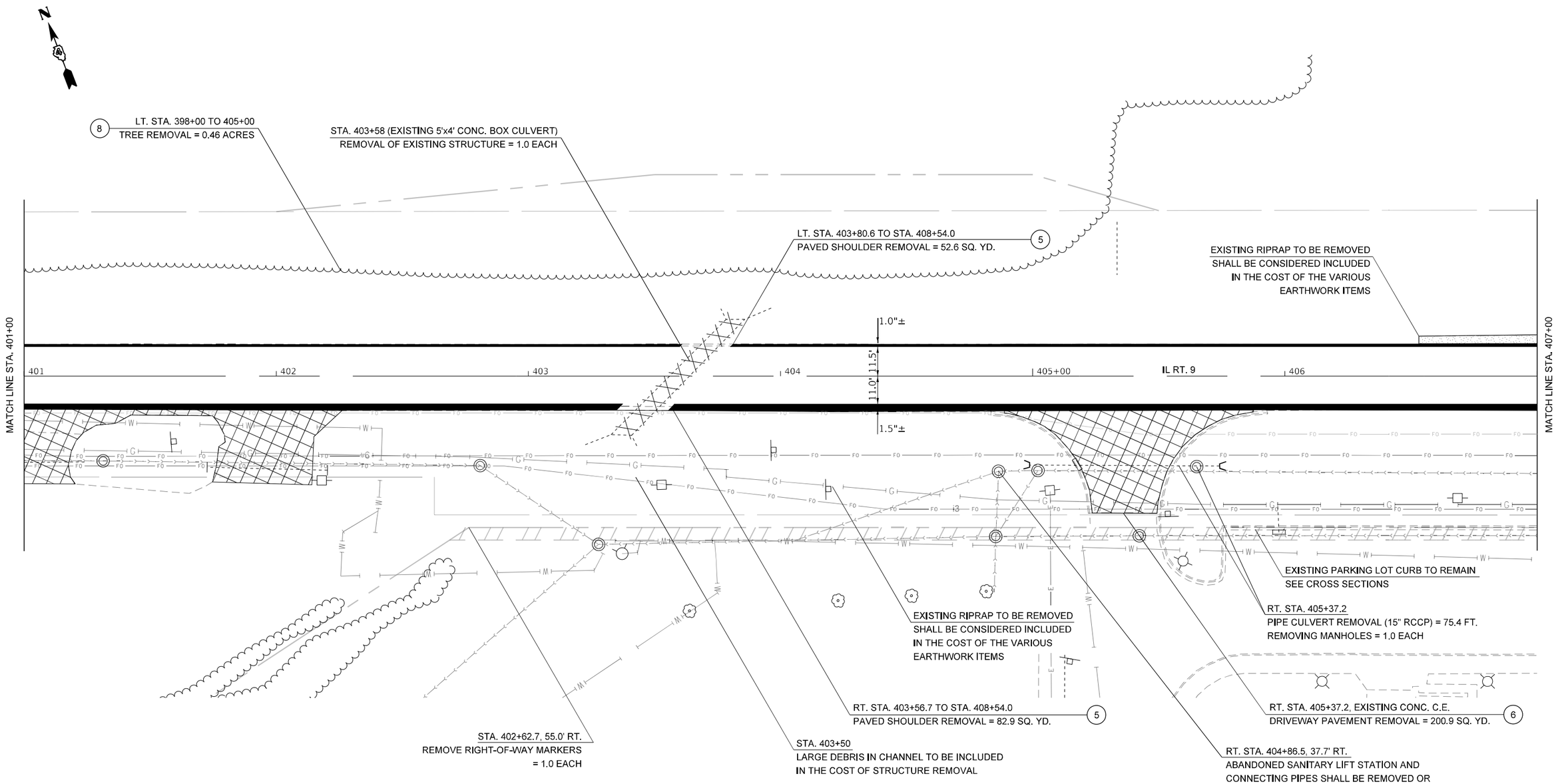

LEGEND

1	HMA SURFACE REMOVAL, BUTT-JOINT	5	PAVED SHOULDER REMOVAL		PROPOSED R.O.W.
2	PAVEMENT REMOVAL	6	DRIVEWAY PAVEMENT REMOVAL		EXISTING R.O.W.
3	HMA SURFACE REMOVAL	7	PAVEMENT PATCHING (SEE SCHEDULES FOR TYPE)		PROPOSED T.E.
4	SIDEWALK REMOVAL	8	TREE REMOVAL		

PLAN NOTES:

1. SEE SPECIAL PROVISION FOR NON-SPECIAL WASTE PRIOR TO ANY EXCAVATION WORK
2. SEE SCHEDULE FOR SIGN REMOVAL LOCATIONS
3. PAVEMENT REMOVAL SHALL CONSIST OF REMOVING THE EXISTING 4-5" HMA SURFACE AND 6-7" OF THE CRUSHED STONE BASE FROM STA. 412+42 TO 435+04 (SEE TYPICALS)
4. PAVED SHOULDER REMOVAL MATERIAL MAY INCLUDE HMA AND PCC
5. FOR ADDITIONAL REMOVAL ITEMS, SEE DRAINAGE SHEETS

0 20 40 60
SCALE IN FEET

USER NAME = $USER$	DESIGNED -	REVISED -	
	DRAWN -	REVISED -	
PLOT SCALE = 1:40	CHECKED -	REVISED -	
PLOT DATE = 3/13/2025	DATE -	REVISED -	

STATE OF ILLINOIS
DEPARTMENT OF TRANSPORTATION

EXISTING UTILITIES & REMOVAL PLANS

SCALE: | SHEET 7 OF 13 SHEETS | STA. TO STA.

F.A.P. RTE.	SECTION	COUNTY	TOTAL SHEETS	SHEET NO.
693	118RS-8.W-2	TAZEWELL	292	65
		CONTRACT NO. 68A65		
		ILLINOIS	FED. AID PROJECT	

MODEL: Default
FILE NAME: pw:\\ildot-pw.bentley.com:PWIDOT\Documents\IDOT Offices\District 4\Projects\D4_68A65\CADData\CADsheets\D468A65-sht-removal.dgn

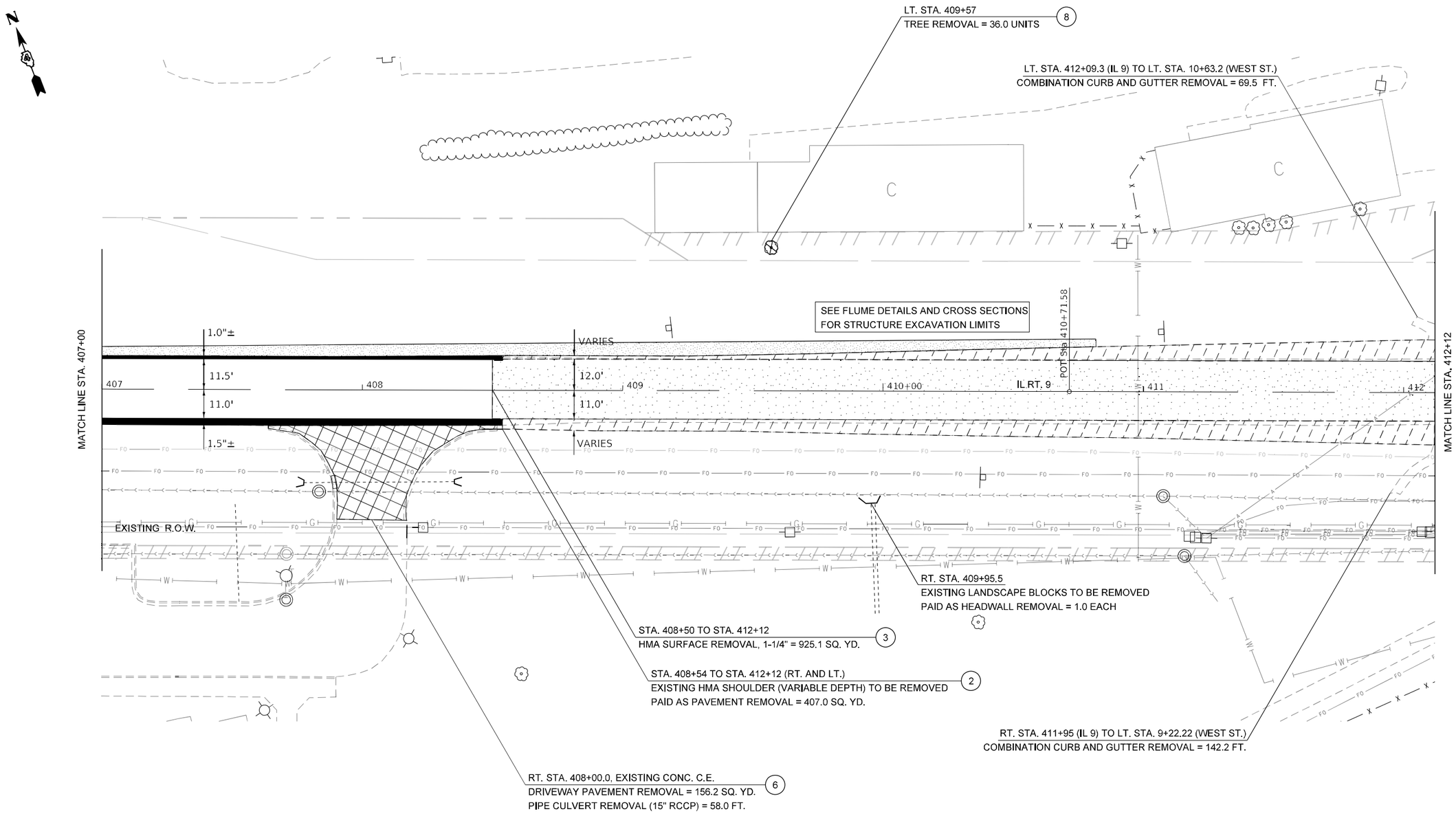

LEGEND

1	HMA SURFACE REMOVAL, BUTT-JOINT	5	PAVED SHOULDER REMOVAL		PROPOSED R.O.W.
2	PAVEMENT REMOVAL	6	DRIVEWAY PAVEMENT REMOVAL		EXISTING R.O.W.
3	HMA SURFACE REMOVAL	7	PAVEMENT PATCHING (SEE SCHEDULES FOR TYPE)		PROPOSED T.E.
4	SIDEWALK REMOVAL	8	TREE REMOVAL		

PLAN NOTES:

1. SEE SPECIAL PROVISION FOR NON-SPECIAL WASTE PRIOR TO ANY EXCAVATION WORK
2. SEE SCHEDULE FOR SIGN REMOVAL LOCATIONS
3. PAVEMENT REMOVAL SHALL CONSIST OF REMOVING THE EXISTING 4-5" HMA SURFACE AND 6-7" OF THE CRUSHED STONE BASE FROM STA. 412+42 TO 435+04 (SEE TYPICALS)
4. PAVED SHOULDER REMOVAL MATERIAL MAY INCLUDE HMA AND PCC
5. FOR ADDITIONAL REMOVAL ITEMS, SEE DRAINAGE SHEETS

0 20 40 60
SCALE IN FEET

MODEL: Default
FILE NAME: pw:\\ildot-pw.bentley.com:PWIDOT\Documents\IDOT Offices\District 4\Projects\D4_68A65\CADData\CADsheets\D468A65-Int-removal.dgn

USER NAME = $USER$	DESIGNED -	REVISED -
	DRAWN -	REVISED -
PLOT SCALE = 1:40	CHECKED -	REVISED -
PLOT DATE = 3/13/2025	DATE -	REVISED -

STATE OF ILLINOIS
DEPARTMENT OF TRANSPORTATION

EXISTING UTILITIES & REMOVAL PLANS

SCALE: | SHEET 8 OF 13 SHEETS | STA. TO STA.

F.A.P. RTE.	SECTION	COUNTY	TOTAL SHEETS	SHEET NO.
693	118RS-8,W-2	TAZEWELL	292	66

CONTRACT NO. 68A65

ILLINOIS | FED. AID PROJECT

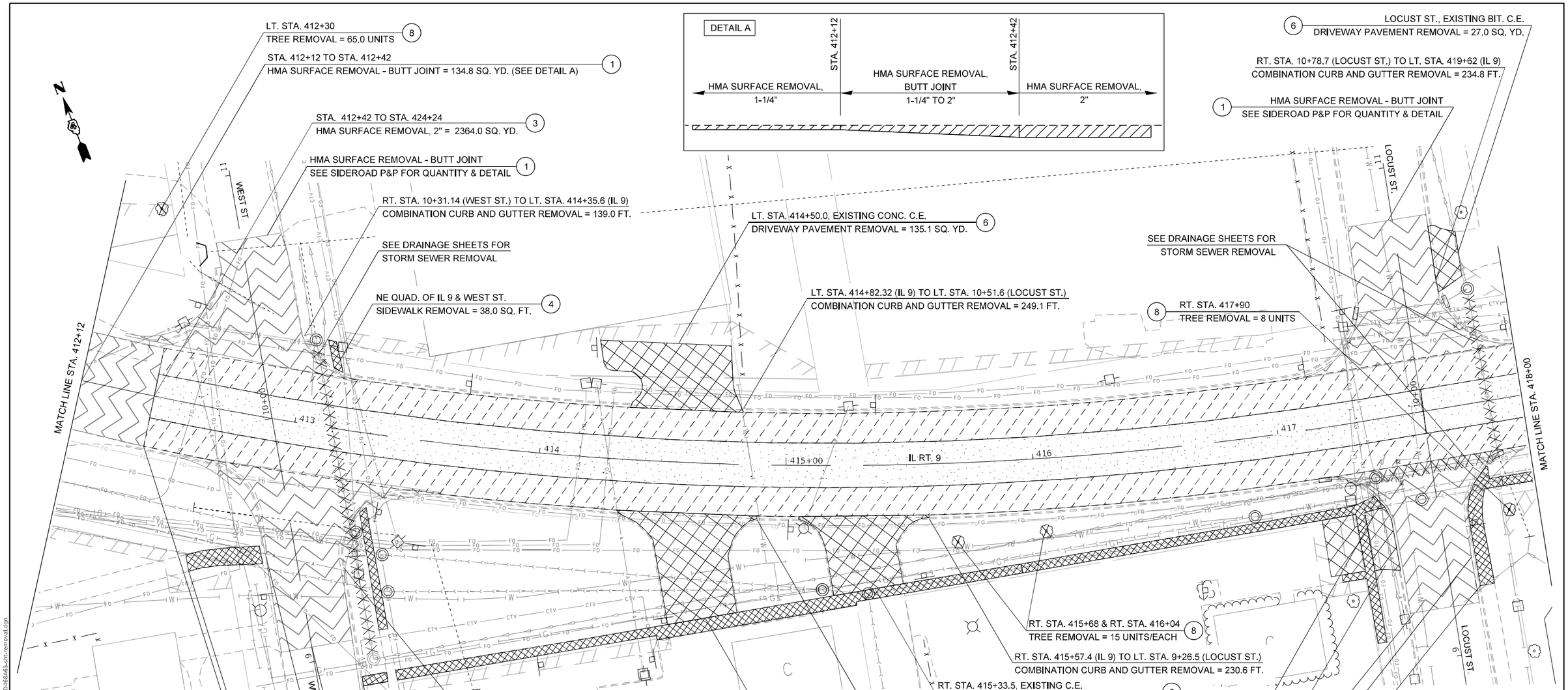

LEGEND

1 HMA SURFACE REMOVAL, BUTT-JOINT	5 PAVED SHOULDER REMOVAL	PROPOSED R.O.W.	
2 PAVEMENT REMOVAL	6 DRIVEWAY PAVEMENT REMOVAL	EXISTING R.O.W.	
3 HMA SURFACE REMOVAL	7 PAVEMENT PATCHING (SEE SCHEDULES FOR TYPE)	PROPOSED T.E.	
4 SIDEWALK REMOVAL	8 TREE REMOVAL		

PLAN NOTES:

1. SEE SPECIAL PROVISION FOR NON-SPECIAL WASTE PRIOR TO ANY EXCAVATION WORK
2. SEE SCHEDULE FOR SIGN REMOVAL LOCATIONS
3. PAVEMENT REMOVAL SHALL CONSIST OF REMOVING THE EXISTING 4-5" HMA SURFACE AND 6-7" OF THE CRUSHED STONE BASE FROM STA. 412+42 TO 435+04 (SEE TYPICALS)
4. PAVED SHOULDER REMOVAL MATERIAL MAY INCLUDE HMA AND PCC
5. FOR ADDITIONAL REMOVAL ITEMS, SEE DRAINAGE SHEETS

0 20 40 60
SCALE IN FEET

USER NAME = $USER$	DESIGNED -	REVISED -
	DRAWN -	REVISED -
PLOT SCALE = 1:40	CHECKED -	REVISED -
PLOT DATE = 3/13/2025	DATE -	REVISED -

STATE OF ILLINOIS
DEPARTMENT OF TRANSPORTATION

EXISTING UTILITIES & REMOVAL PLANS

SCALE: SHEET 9 OF 13 SHEETS STA. TO STA.

F.A.P. RTE.	SECTION	COUNTY	TOTAL SHEETS	SHEET NO.
693	118RS-8,W-2	TAZEWELL	292	67

CONTRACT NO. 68A65

ILLINOIS FED. AID PROJECT

MODEL: Default
FILE NAME: pw:\\ildot-pw.bentley.com:PWIDOT\Documents\IDOT Offices\District 4\Projects\D4 68A65\CADData\CADsheets\D468A65-sht-removal.dgn

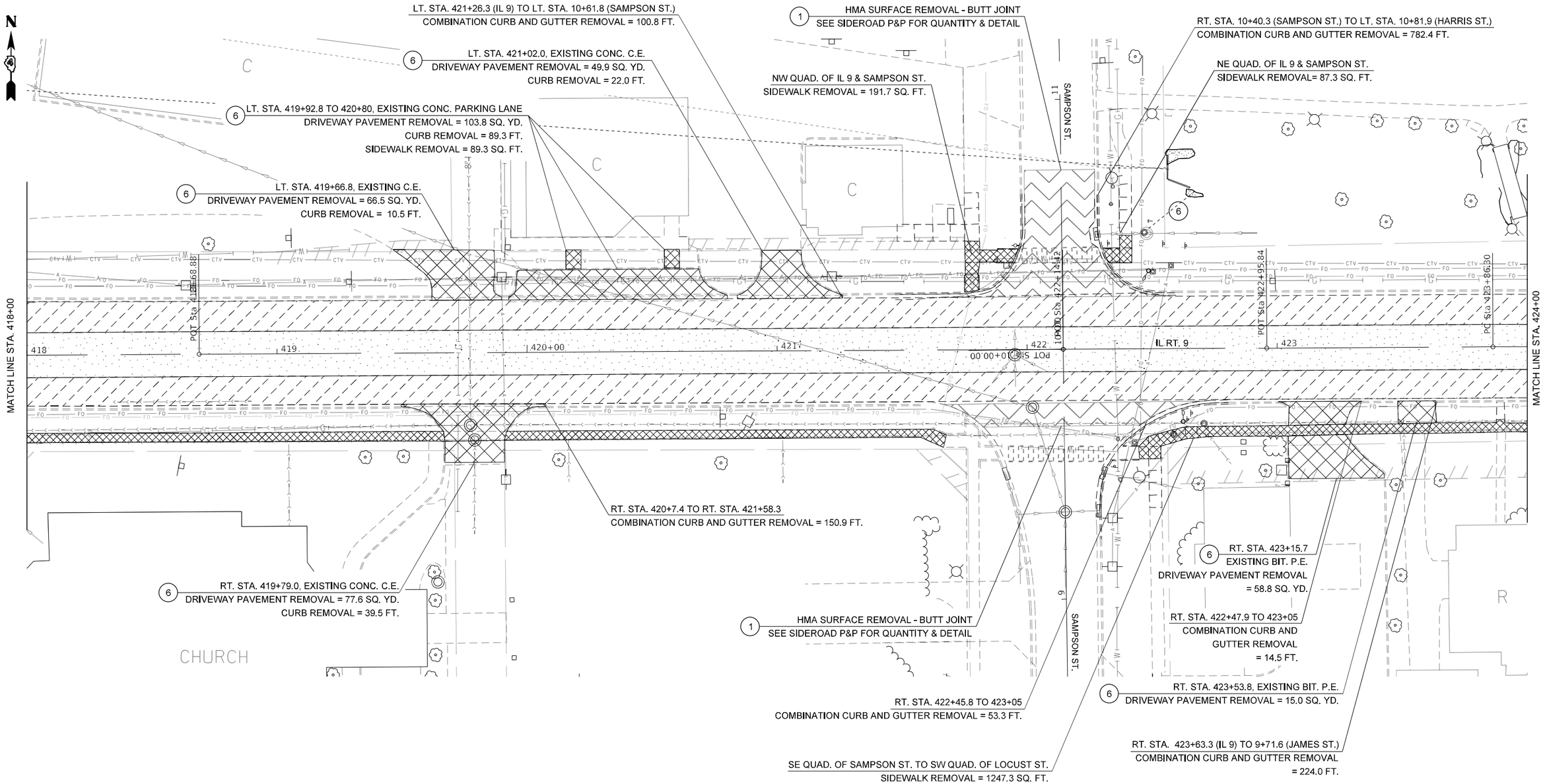

LEGEND

1 HMA SURFACE REMOVAL, BUTT-JOINT	5 PAVED SHOULDER REMOVAL	PROPOSED R.O.W.	
2 PAVEMENT REMOVAL	6 DRIVEWAY PAVEMENT REMOVAL	EXISTING R.O.W.	
3 HMA SURFACE REMOVAL	7 PAVEMENT PATCHING (SEE SCHEDULES FOR TYPE)	PROPOSED T.E.	
4 SIDEWALK REMOVAL	8 TREE REMOVAL		

PLAN NOTES:

1. SEE SPECIAL PROVISION FOR NON-SPECIAL WASTE PRIOR TO ANY EXCAVATION WORK
2. SEE SCHEDULE FOR SIGN REMOVAL LOCATIONS
3. PAVEMENT REMOVAL SHALL CONSIST OF REMOVING THE EXISTING 4-5" HMA SURFACE AND 6-7" OF THE CRUSHED STONE BASE FROM STA. 412+42 TO 435+04 (SEE TYPICALS)
4. PAVED SHOULDER REMOVAL MATERIAL MAY INCLUDE HMA AND PCC
5. FOR ADDITIONAL REMOVAL ITEMS, SEE DRAINAGE SHEETS

0 20 40 60
SCALE IN FEET

USER NAME = $USER$	DESIGNED -	REVISED -
	DRAWN -	REVISED -
PLOT SCALE = 1:40	CHECKED -	REVISED -
PLOT DATE = 3/13/2025	DATE -	REVISED -

STATE OF ILLINOIS
DEPARTMENT OF TRANSPORTATION

EXISTING UTILITIES & REMOVAL PLANS

SCALE: | SHEET 10 OF 13 SHEETS | STA. TO STA.

F.A.P. RTE.	SECTION	COUNTY	TOTAL SHEETS	SHEET NO.
693	118RS-8,W-2	TAZEWELL	292	68

CONTRACT NO. 68A65

ILLINOIS | FED. AID PROJECT

MODEL: Default
FILE NAME: pw:\\ildot-pw.bentley.com:PWIDOT\Documents\IDOT Offices\District 4\Projects\D4_68A65\CADData\CADsheets\D468A65-sht-removal.dgn

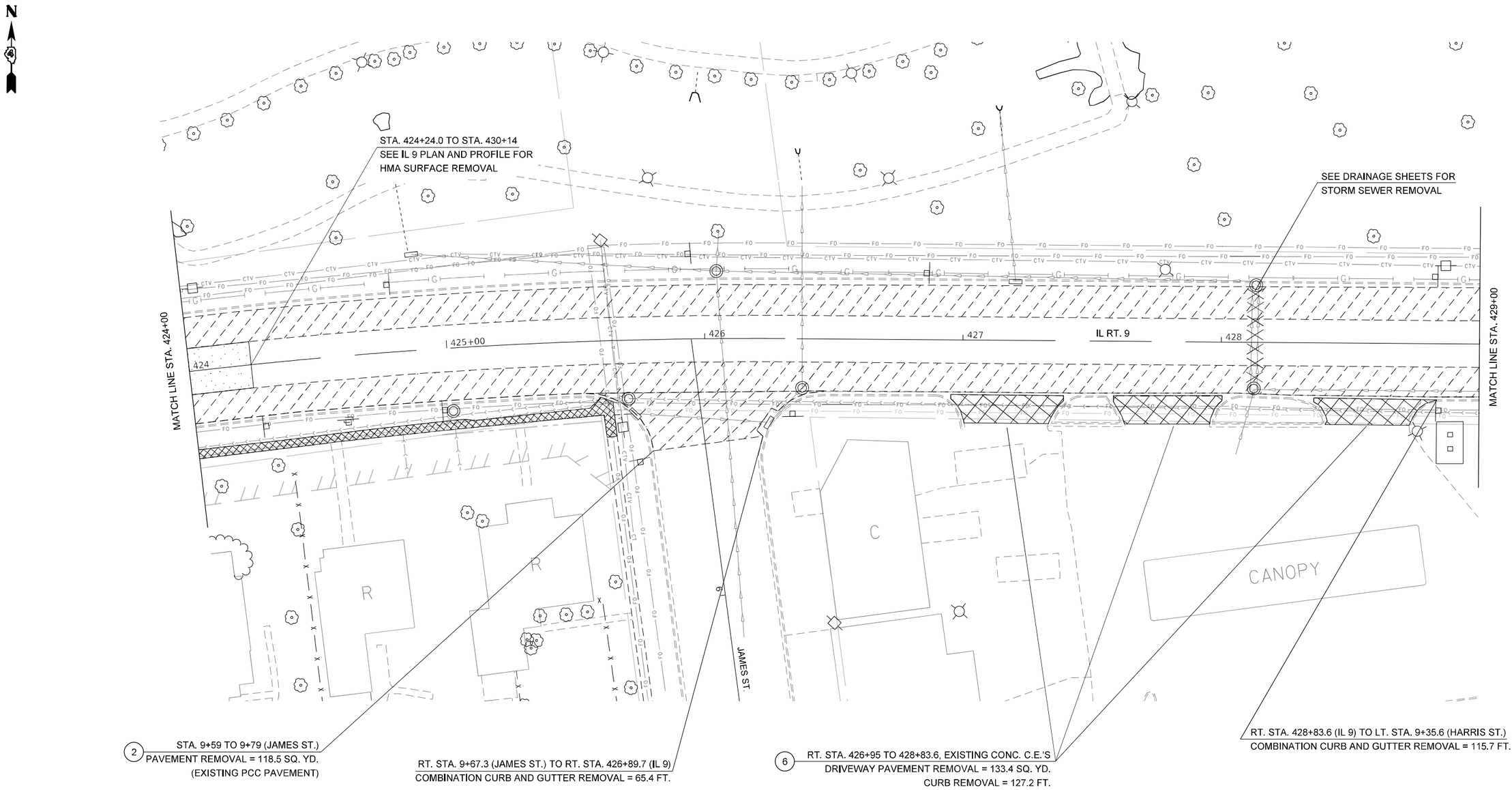

LEGEND

1. HMA SURFACE REMOVAL, BUTT-JOINT
2. PAVEMENT REMOVAL
3. HMA SURFACE REMOVAL
4. SIDEWALK REMOVAL
5. PAVED SHOULDER REMOVAL
6. DRIVEWAY PAVEMENT REMOVAL
7. PAVEMENT PATCHING (SEE SCHEDULES FOR TYPE)
8. TREE REMOVAL

PROPOSED R.O.W.

EXISTING R.O.W.

PROPOSED T.E.

PLAN NOTES:

1. SEE SPECIAL PROVISION FOR NON-SPECIAL WASTE PRIOR TO ANY EXCAVATION WORK
2. SEE SCHEDULE FOR SIGN REMOVAL LOCATIONS
3. PAVEMENT REMOVAL SHALL CONSIST OF REMOVING THE EXISTING 4-5" HMA SURFACE AND 6-7" OF THE CRUSHED STONE BASE FROM STA. 412+42 TO 435+04 (SEE TYPICALS)
4. PAVED SHOULDER REMOVAL MATERIAL MAY INCLUDE HMA AND PCC
5. FOR ADDITIONAL REMOVAL ITEMS, SEE DRAINAGE SHEETS

0 20 40 60
SCALE IN FEET

MODEL: Default
FILE NAME: pw:\\ildot-pw.bentley.com:PWIDOT\Documents\IDOT Offices\District 4\Projects\D4 68A65\CADData\CADsheets\D468A65-ilk-removal.dgn

USER NAME = $USER$	DESIGNED -	REVISED -	
	DRAWN -	REVISED -	
PLOT SCALE = 1:40	CHECKED -	REVISED -	
PLOT DATE = 3/13/2025	DATE -	REVISED -	

STATE OF ILLINOIS
DEPARTMENT OF TRANSPORTATION

EXISTING UTILITIES & REMOVAL PLANS

SCALE: | SHEET 11 OF 13 SHEETS | STA. | TO STA.

F.A.P. RTE.	SECTION	COUNTY	TOTAL SHEETS	SHEET NO.
693	118RS-8,W-2	TAZEWELL	292	69

CONTRACT NO. 68A65

ILLINOIS | FED. AID PROJECT

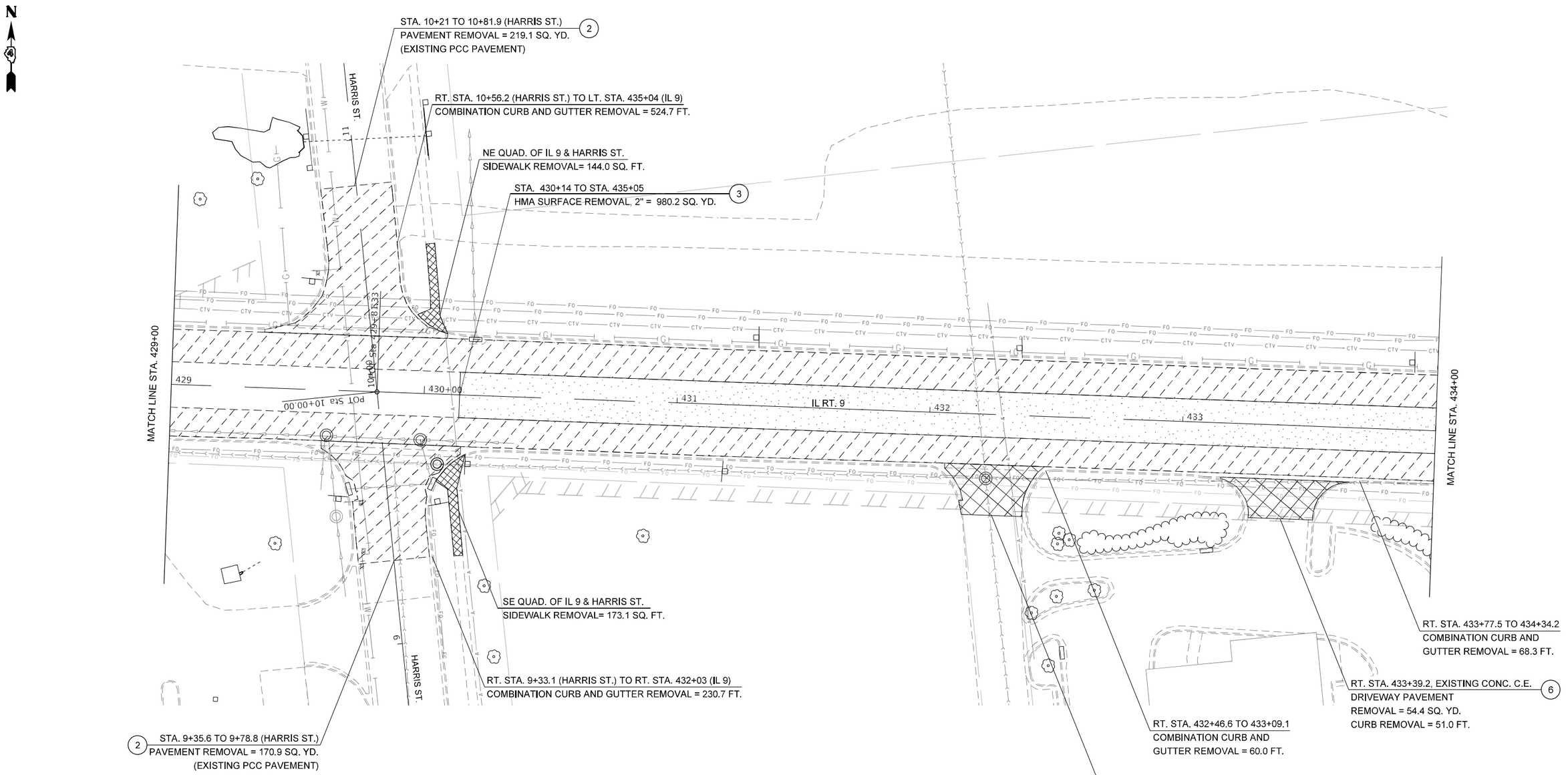

LEGEND

1 HMA SURFACE REMOVAL, BUTT-JOINT	5 PAVED SHOULDER REMOVAL	PROPOSED R.O.W.	
2 PAVEMENT REMOVAL	6 DRIVEWAY PAVEMENT REMOVAL	EXISTING R.O.W.	
3 HMA SURFACE REMOVAL	7 PAVEMENT PATCHING (SEE SCHEDULES FOR TYPE)	PROPOSED T.E.	
4 SIDEWALK REMOVAL	8 TREE REMOVAL		

PLAN NOTES:

1. SEE SPECIAL PROVISION FOR NON-SPECIAL WASTE PRIOR TO ANY EXCAVATION WORK
2. SEE SCHEDULE FOR SIGN REMOVAL LOCATIONS
3. PAVEMENT REMOVAL SHALL CONSIST OF REMOVING THE EXISTING 4-5" HMA SURFACE AND 6-7" OF THE CRUSHED STONE BASE FROM STA. 412+42 TO 435+04 (SEE TYPICALS)
4. PAVED SHOULDER REMOVAL MATERIAL MAY INCLUDE HMA AND PCC
5. FOR ADDITIONAL REMOVAL ITEMS, SEE DRAINAGE SHEETS

0 20 40 60
SCALE IN FEET

MODEL: Default
FILE NAME: pw:\\ildot-pw.bentley.com:PWIDOT\Documents\IDOT Offices\District 4\Projects\D4_68A65\CADData\CADsheets\D468A65-sht-removal.dgn

USER NAME = $USER$	DESIGNED -	REVISED -	
	DRAWN -	REVISED -	
PLOT SCALE = 1:40	CHECKED -	REVISED -	
PLOT DATE = 2/14/2025	DATE -	REVISED -	

STATE OF ILLINOIS
DEPARTMENT OF TRANSPORTATION

EXISTING UTILITIES & REMOVAL PLANS

SCALE: | SHEET 12 OF 13 SHEETS | STA. TO STA.

F.A.P. RTE.	SECTION	COUNTY	TOTAL SHEETS	SHEET NO.
693	118RS-8.W-2	TAZEWELL	292	70
		CONTRACT NO. 68A65		
	ILLINOIS	FED. AID PROJECT		

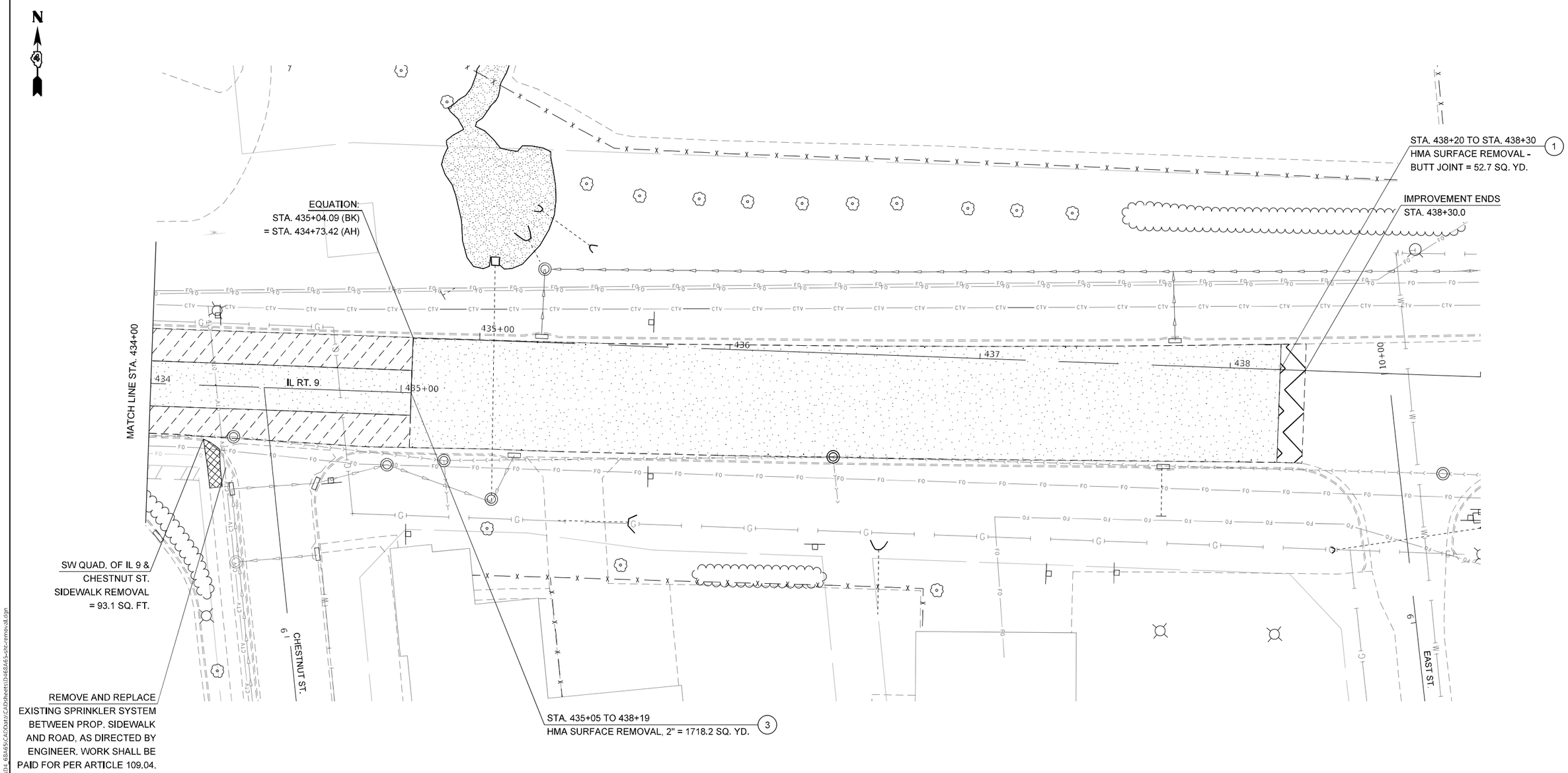

LEGEND

1	HMA SURFACE REMOVAL, BUTT-JOINT		5	PAVED SHOULDER REMOVAL			PROPOSED R.O.W.
2	PAVEMENT REMOVAL		6	DRIVEWAY PAVEMENT REMOVAL			EXISTING R.O.W.
3	HMA SURFACE REMOVAL		7	PAVEMENT PATCHING (SEE SCHEDULES FOR TYPE)			PROPOSED T.E.
4	SIDEWALK REMOVAL		8	TREE REMOVAL			

PLAN NOTES:

1. SEE SPECIAL PROVISION FOR NON-SPECIAL WASTE PRIOR TO ANY EXCAVATION WORK
2. SEE SCHEDULE FOR SIGN REMOVAL LOCATIONS
3. PAVEMENT REMOVAL SHALL CONSIST OF REMOVING THE EXISTING 4-5" HMA SURFACE AND 6-7" OF THE CRUSHED STONE BASE FROM STA. 412+42 TO 435+04 (SEE TYPICALS)
4. PAVED SHOULDER REMOVAL MATERIAL MAY INCLUDE HMA AND PCC
5. FOR ADDITIONAL REMOVAL ITEMS, SEE DRAINAGE SHEETS

0 20 40 60
SCALE IN FEET

MODEL: Default
FILE NAME: pw:\\ildot-pw.bentley.com:PWIDOT\Documents\IDOT Offices\District 4\Projects\D4_68A65\CADData\CADsheets\D468A65-ihr-removal.dgn

USER NAME = $USER$	DESIGNED -	REVISED -	
	DRAWN -	REVISED -	
PLOT SCALE = 1:40	CHECKED -	REVISED -	
PLOT DATE = 2/14/2025	DATE -	REVISED -	

STATE OF ILLINOIS
DEPARTMENT OF TRANSPORTATION

EXISTING UTILITIES & REMOVAL PLANS

SCALE: | SHEET 13 OF 13 SHEETS | STA. | TO STA.

F.A.P. RTE.	SECTION	COUNTY	TOTAL SHEETS	SHEET NO.
693	118RS-8.W-2	TAZEWELL	292	71
		CONTRACT NO. 68A65		
	ILLINOIS	FED. AID PROJECT		

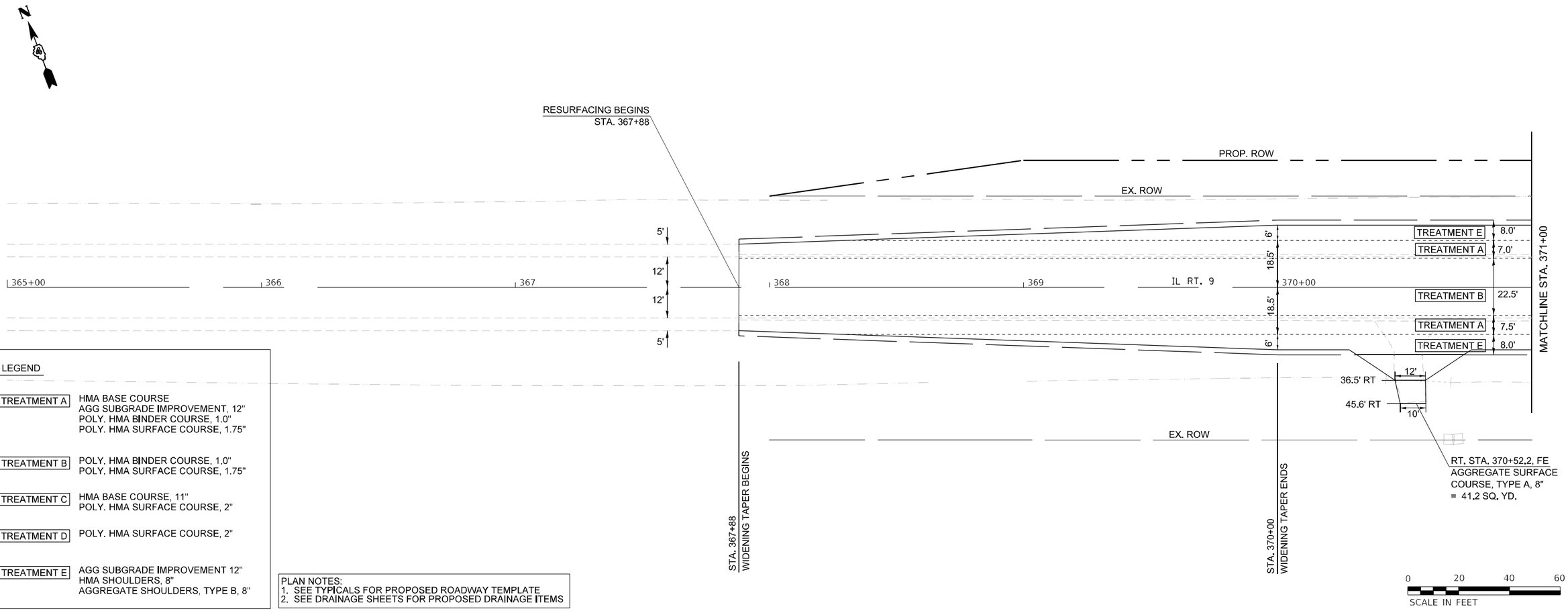

LEGEND

TREATMENT A	HMA BASE COURSE AGG SUBGRADE IMPROVEMENT, 12" POLY. HMA BINDER COURSE, 1.0" POLY. HMA SURFACE COURSE, 1.75"
TREATMENT B	POLY. HMA BINDER COURSE, 1.0" POLY. HMA SURFACE COURSE, 1.75"
TREATMENT C	HMA BASE COURSE, 11" POLY. HMA SURFACE COURSE, 2"
TREATMENT D	POLY. HMA SURFACE COURSE, 2"
TREATMENT E	AGG SUBGRADE IMPROVEMENT 12" HMA SHOULDERS, 8" AGGREGATE SHOULDERS, TYPE B, 8"

PLAN NOTES:
1. SEE TYPICALS FOR PROPOSED ROADWAY TEMPLATE
2. SEE DRAINAGE SHEETS FOR PROPOSED DRAINAGE ITEMS

PLAN
NOTE BOOK NO. ____
SURVEYED
PLOTTED
ALIGNMENT CHECKED
RT. OF WAY CHECKED
CADD FILE NAME
BY
DATE

PROFILE
NOTE BOOK NO. ____
SURVEYED
PLOTTED
GRADES CHECKED
B.M. NOTED
STRUCTURE NOTAT'NS CH'KD
BY
DATE

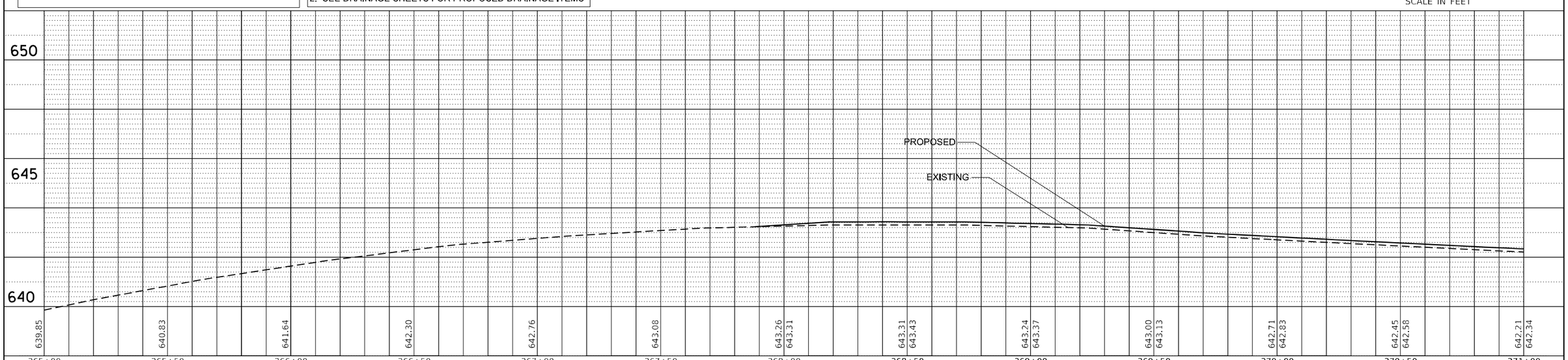

FILE NAME = $FILE$	USER NAME = $USER$	DESIGNED -	REVISED -
		DRAWN -	REVISED -
	PLOT SCALE = $SCALE$	CHECKED -	REVISED -
$MODELNAME$	PLOT DATE = $DATE$	DATE -	REVISED -

STATE OF ILLINOIS
DEPARTMENT OF TRANSPORTATION

PLAN & PROFILE
IL 9 (PEARL STREET)

SCALE: | SHEET 55 OF 505 SHEETS | STA. 365+00 TO STA. 371+00

F.A.P. RTE.	SECTION	COUNTY	TOTAL SHEETS	SHEET NO.
693	118RS-8,W-2	TAZEWELL	292	72

CONTRACT NO. 68A65

ILLINOIS FED. AID PROJECT

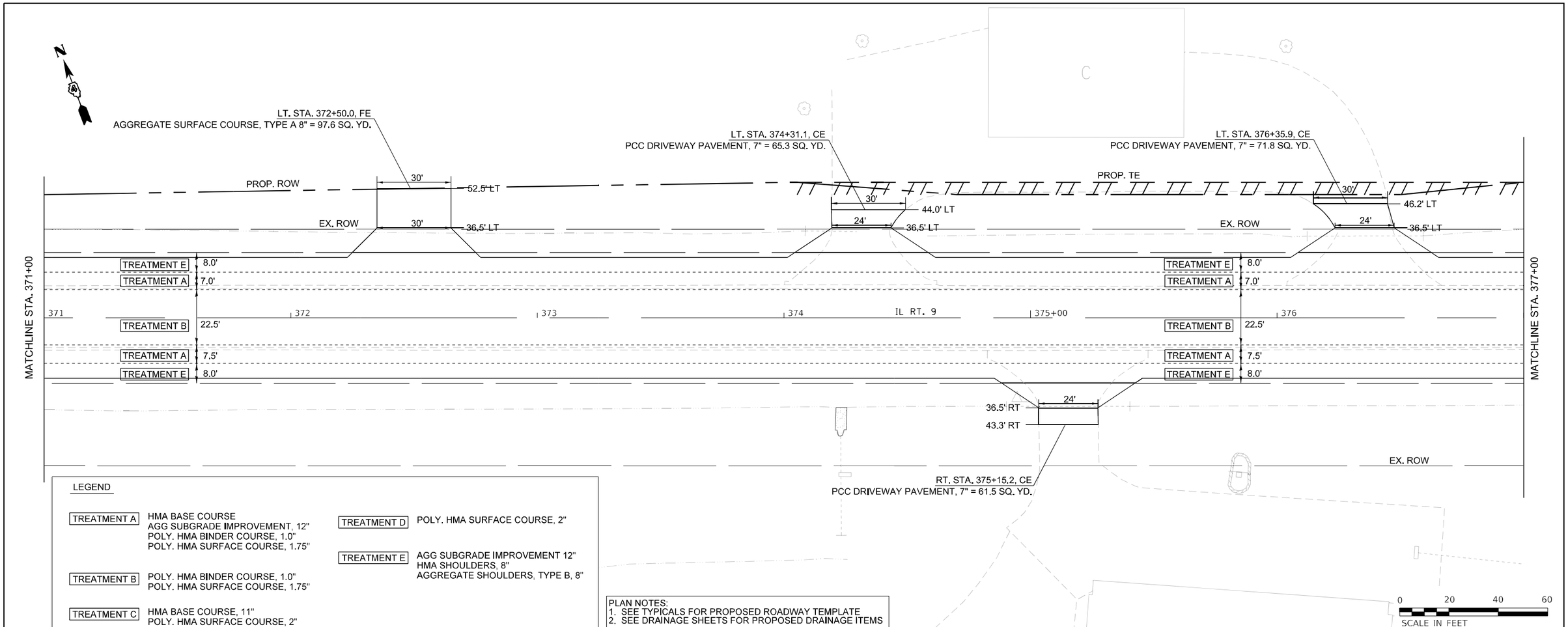

LEGEND

TREATMENT A — HMA BASE COURSE
AGG SUBGRADE IMPROVEMENT, 12"
POLY. HMA BINDER COURSE, 1.0"
POLY. HMA SURFACE COURSE, 1.75"

TREATMENT B — POLY. HMA BINDER COURSE, 1.0"
POLY. HMA SURFACE COURSE, 1.75"

TREATMENT C — HMA BASE COURSE, 11"
POLY. HMA SURFACE COURSE, 2"

TREATMENT D — POLY. HMA SURFACE COURSE, 2"

TREATMENT E — AGG SUBGRADE IMPROVEMENT 12"
HMA SHOULDERS, 8"
AGGREGATE SHOULDERS, TYPE B, 8"

PLAN NOTES:
1. SEE TYPICALS FOR PROPOSED ROADWAY TEMPLATE
2. SEE DRAINAGE SHEETS FOR PROPOSED DRAINAGE ITEMS

PLAN — SURVEYED / PLOTTED / ALIGNMENT CHECKED / RT. OF WAY CHECKED / CADD FILE NAME — NOTE BOOK NO. ____ — BY — DATE

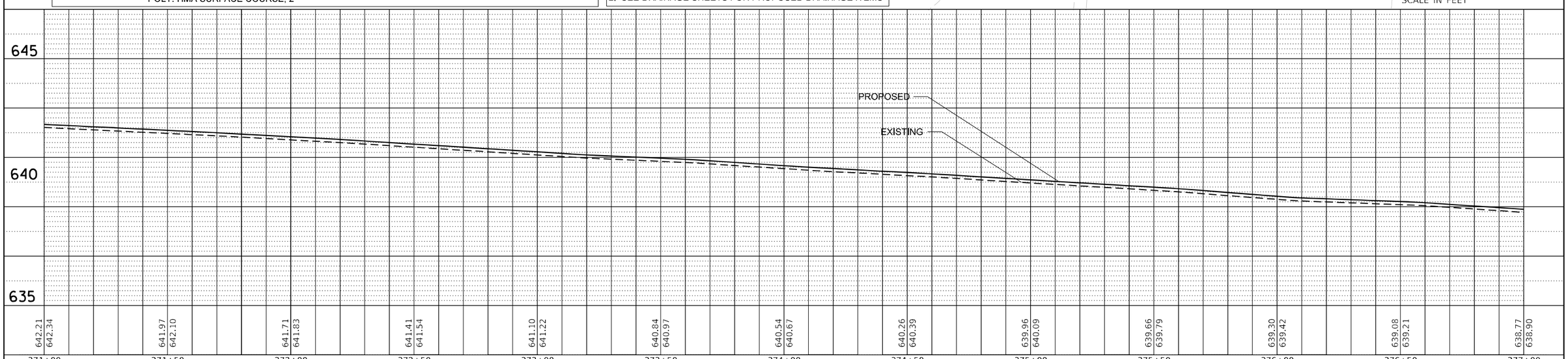

PROFILE — SURVEYED / PLOTTED / GRADES CHECKED / B.M. NOTED / STRUCTURE NOTAT'NS CHKD — NOTE BOOK NO. ____ — BY — DATE

FILE NAME = $FILE$	USER NAME = $USER$	DESIGNED -	REVISED -
		DRAWN -	REVISED -
	PLOT SCALE = $SCALE$	CHECKED -	REVISED -
$MODELNAME$	PLOT DATE = $DATE$	DATE -	REVISED -

STATE OF ILLINOIS
DEPARTMENT OF TRANSPORTATION

PLAN & PROFILE
IL 9 (PEARL STREET)

SCALE: | SHEET $S OF $OS SHEETS | STA. 371+00 TO STA. 377+00

F.A.P. RTE.	SECTION	COUNTY	TOTAL SHEETS	SHEET NO.
693	118RS-8,W-2	TAZEWELL	292	73

CONTRACT NO. 68A65

ILLINOIS FED. AID PROJECT

LEGEND

TREATMENT A	HMA BASE COURSE AGG SUBGRADE IMPROVEMENT, 12" POLY. HMA BINDER COURSE, 1.0" POLY. HMA SURFACE COURSE, 1.75"
TREATMENT B	POLY. HMA BINDER COURSE, 1.0" POLY. HMA SURFACE COURSE, 1.75"
TREATMENT C	HMA BASE COURSE, 11" POLY. HMA SURFACE COURSE, 2"
TREATMENT D	POLY. HMA SURFACE COURSE, 2"
TREATMENT E	AGG SUBGRADE IMPROVEMENT 12" HMA SHOULDERS, 8" AGGREGATE SHOULDERS, TYPE B, 8"

PLAN NOTES:
1. SEE TYPICALS FOR PROPOSED ROADWAY TEMPLATE
2. SEE DRAINAGE SHEETS FOR PROPOSED DRAINAGE ITEMS

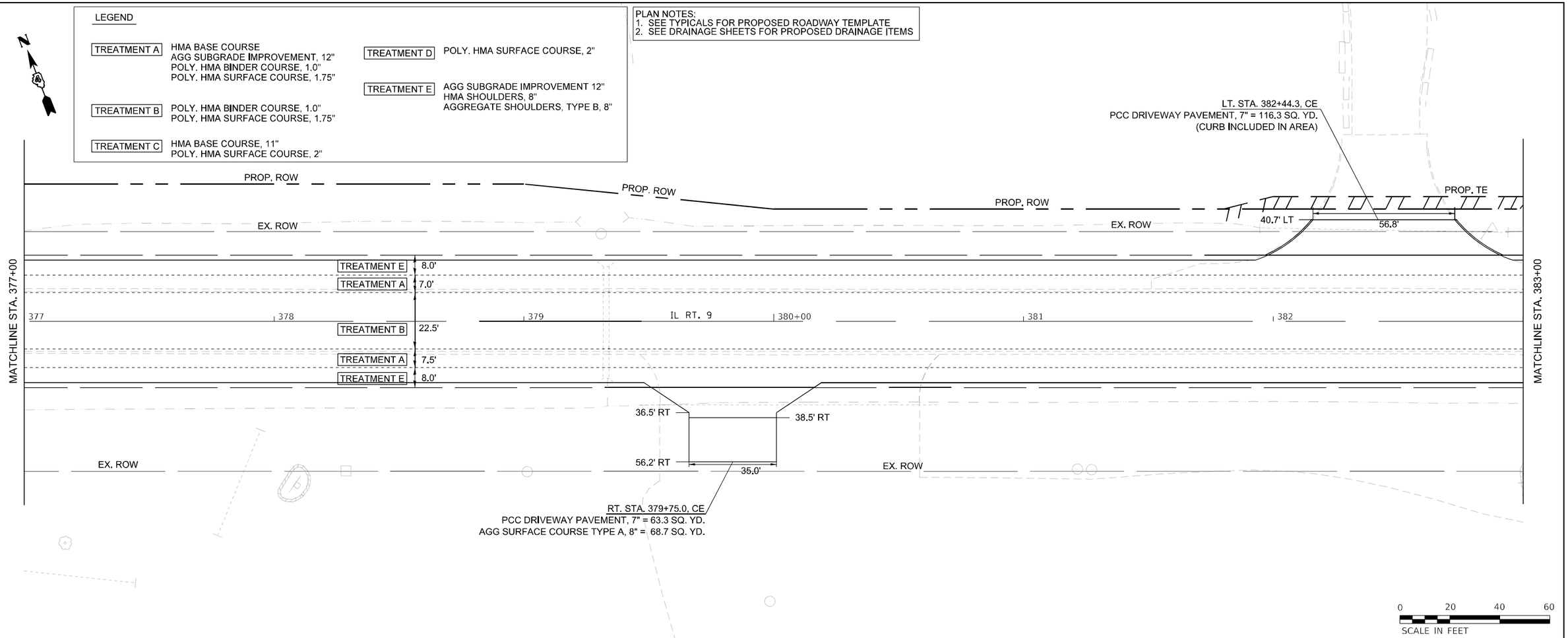

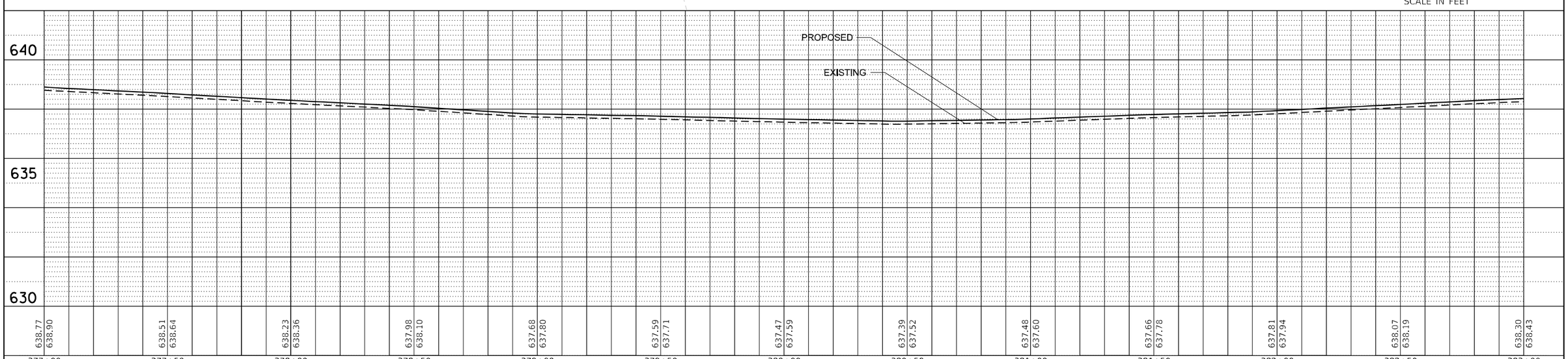

PLAN	BY	DATE
SURVEYED		
PLOTTED		
ALIGNMENT CHECKED		
RT. OF WAY CHECKED		
CADD FILE NAME		
NOTE BOOK NO.		

PROFILE	BY	DATE
SURVEYED		
PLOTTED		
GRADES CHECKED		
B.M. NOTED		
STRUCTURE NOTAT'NS CHKD		
NOTE BOOK NO.		

FILE NAME = $FILEL$	USER NAME = $USER$	DESIGNED -	REVISED -
		DRAWN -	REVISED -
	PLOT SCALE = $SCALE$	CHECKED -	REVISED -
$MODELNAME$	PLOT DATE = $DATE$	DATE -	REVISED -

STATE OF ILLINOIS
DEPARTMENT OF TRANSPORTATION

PLAN & PROFILE
IL 9 (PEARL STREET)

SCALE: SHEET $S OF $OS SHEETS STA. 377+00 TO STA. 383+00

F.A.P. RTE.	SECTION	COUNTY	TOTAL SHEETS	SHEET NO.
693	118RS-8,W-2	TAZEWELL	292	74

CONTRACT NO. 68A65

ILLINOIS FED. AID PROJECT

LEGEND

TREATMENT A	HMA BASE COURSE AGG SUBGRADE IMPROVEMENT, 12" POLY. HMA BINDER COURSE, 1.0" POLY. HMA SURFACE COURSE, 1.75"
TREATMENT B	POLY. HMA BINDER COURSE, 1.0" POLY. HMA SURFACE COURSE, 1.75"
TREATMENT C	HMA BASE COURSE, 11" POLY. HMA SURFACE COURSE, 2"
TREATMENT D	POLY. HMA SURFACE COURSE, 2"
TREATMENT E	AGG SUBGRADE IMPROVEMENT 12" HMA SHOULDERS, 8" AGGREGATE SHOULDERS, TYPE B, 8"

PLAN NOTES:
1. SEE TYPICALS FOR PROPOSED ROADWAY TEMPLATE
2. SEE DRAINAGE SHEETS FOR PROPOSED DRAINAGE ITEMS

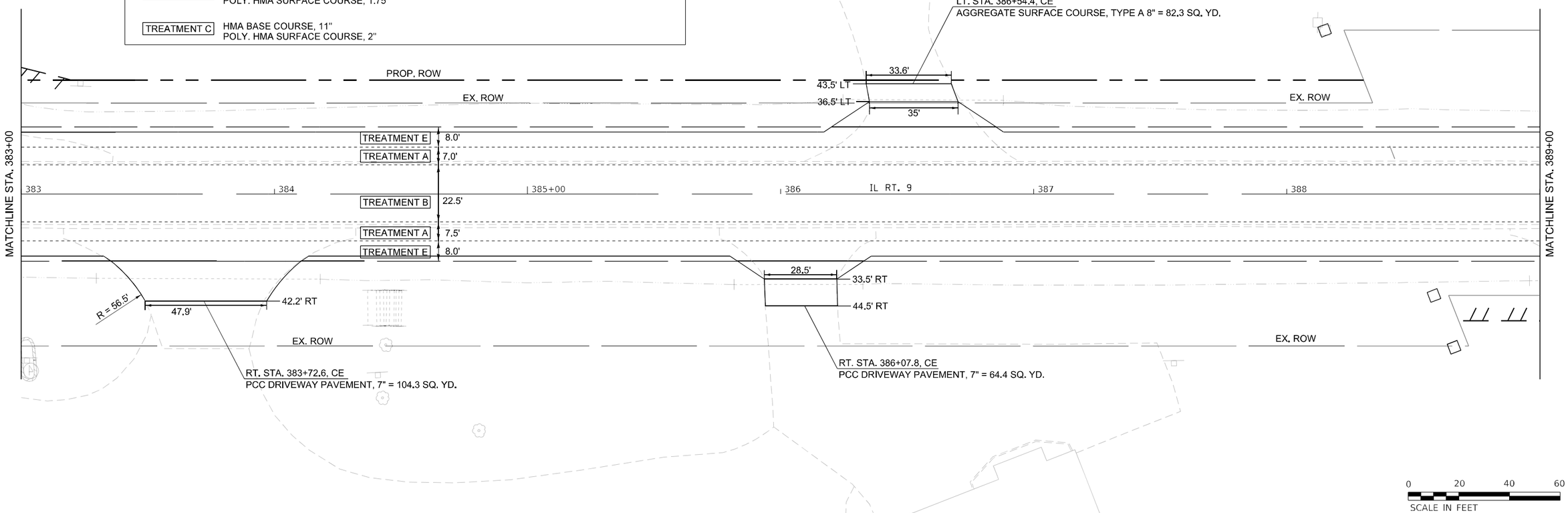

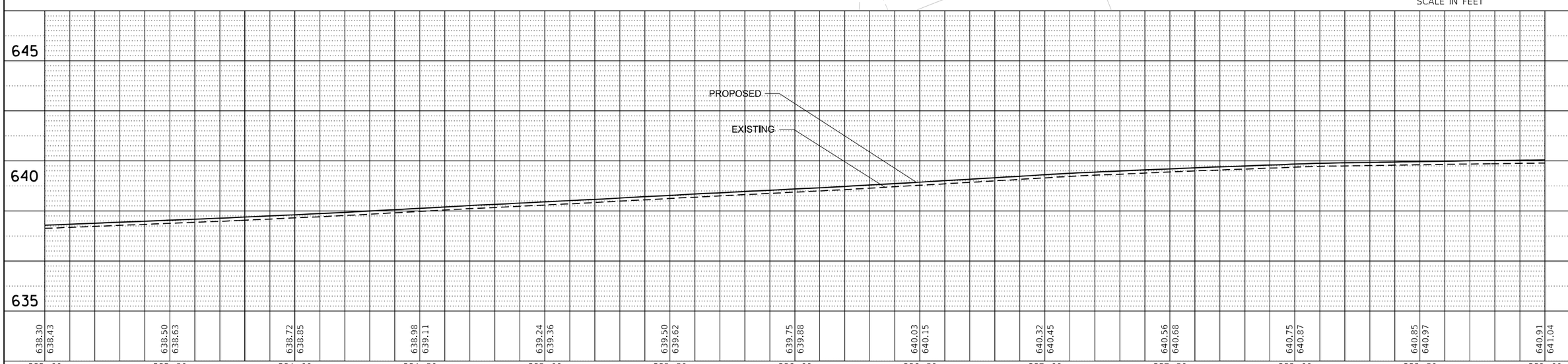

PLAN — NOTE BOOK NO. ____ — SURVEYED / PLOTTED / ALIGNMENT CHECKED / RT. OF WAY CHECKED / CADD FILE NAME — BY — DATE

PROFILE — NOTE BOOK NO. ____ — SURVEYED / PLOTTED / GRADES CHECKED / B.M. NOTED / STRUCTURE NOTAT'NS CHKD — BY — DATE

FILE NAME = $FILEL$	USER NAME = $USER$	DESIGNED -	REVISED -
		DRAWN -	REVISED -
	PLOT SCALE = $SCALE$	CHECKED -	REVISED -
$MODELNAME$	PLOT DATE = $DATE$	DATE -	REVISED -

STATE OF ILLINOIS
DEPARTMENT OF TRANSPORTATION

PLAN & PROFILE
IL 9 (PEARL STREET)

SCALE: | SHEET $S OF $OS SHEETS | STA. 383+00 TO STA. 389+00

F.A.P. RTE.	SECTION	COUNTY	TOTAL SHEETS	SHEET NO.
693	118RS-8,W-2	TAZEWELL	292	75

CONTRACT NO. 68A65

ILLINOIS FED. AID PROJECT

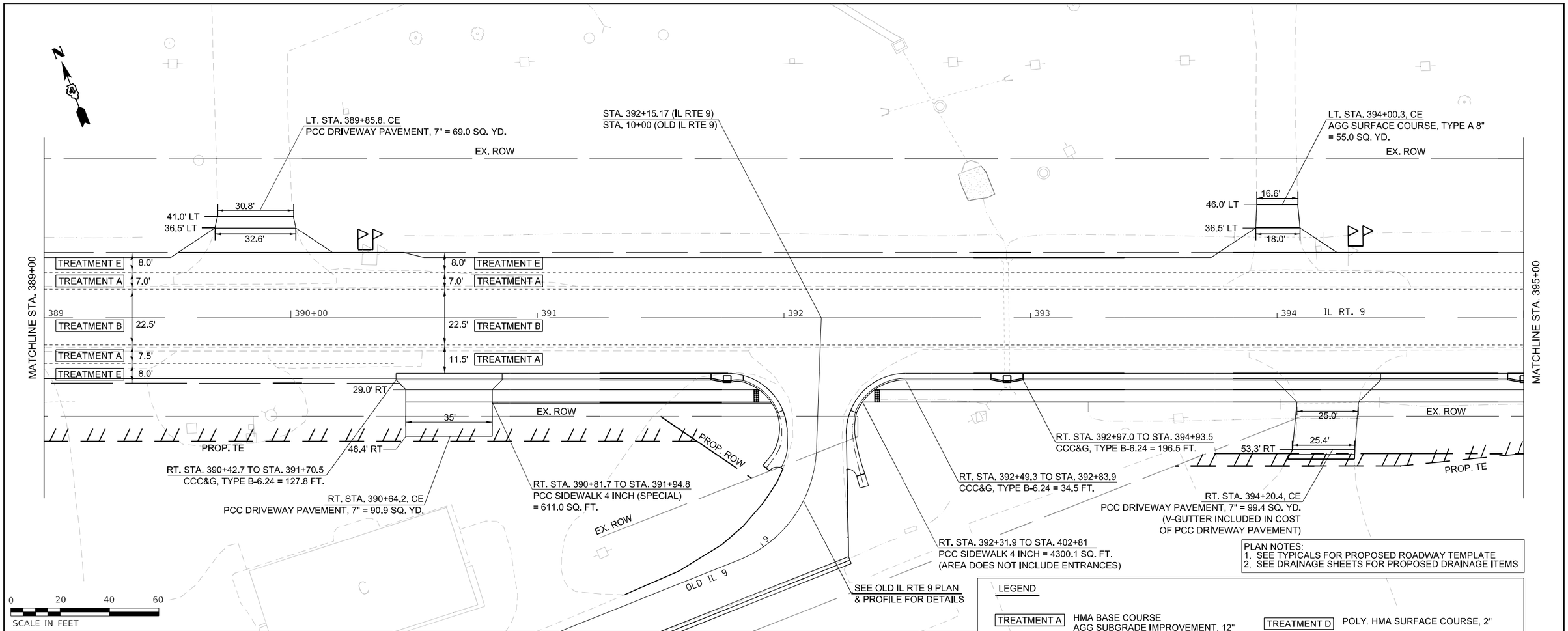

PLAN NOTES:
1. SEE TYPICALS FOR PROPOSED ROADWAY TEMPLATE
2. SEE DRAINAGE SHEETS FOR PROPOSED DRAINAGE ITEMS

LEGEND

TREATMENT A — HMA BASE COURSE
AGG SUBGRADE IMPROVEMENT, 12"
POLY. HMA BINDER COURSE, 1.0"
POLY. HMA SURFACE COURSE, 1.75"

TREATMENT B — POLY. HMA BINDER COURSE, 1.0"
POLY. HMA SURFACE COURSE, 1.75"

TREATMENT C — HMA BASE COURSE, 11"
POLY. HMA SURFACE COURSE, 2"

TREATMENT D — POLY. HMA SURFACE COURSE, 2"

TREATMENT E — AGG SUBGRADE IMPROVEMENT 12"
HMA SHOULDERS, 8"
AGGREGATE SHOULDERS, TYPE B, 8"

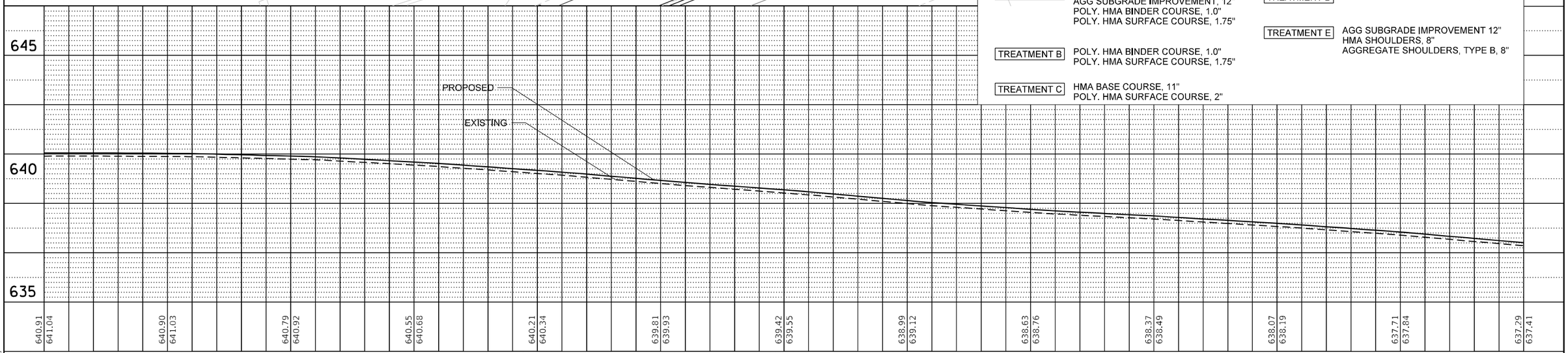

FILE NAME = $FILEL$	USER NAME = $USER$	DESIGNED -	REVISED -
		DRAWN -	REVISED -
	PLOT SCALE = $SCALE$	CHECKED -	REVISED -
$MODELNAME$	PLOT DATE = $DATE$	DATE -	REVISED -

STATE OF ILLINOIS
DEPARTMENT OF TRANSPORTATION

PLAN & PROFILE
IL 9 (PEARL STREET)

SCALE: SHEET $S OF $OS SHEETS STA. 395+00 TO STA. 401+00

F.A.P. RTE.	SECTION	COUNTY	TOTAL SHEETS	SHEET NO.
693	118RS-8.W-2	TAZEWELL	292	76
		CONTRACT NO. 68A65		
		ILLINOIS FED. AID PROJECT		

PLAN — SURVEYED / PLOTTED / ALIGNMENT CHECKED / R.O.W. CHECKED / CADD FILE NAME — NOTE BOOK NO. — BY — DATE

PROFILE — SURVEYED / PLOTTED / GRADES CHECKED / B.M. NOTED / STRUCTURE NOTATIONS CHKD — NOTE BOOK NO. — BY — DATE

MODEL: $MODELNAME$
FILE NAME: $FILEL$

PLAN NOTES:
1. SEE TYPICALS FOR PROPOSED ROADWAY TEMPLATE
2. SEE DRAINAGE SHEETS FOR PROPOSED DRAINAGE ITEMS

LEGEND

TREATMENT A	HMA BASE COURSE AGG SUBGRADE IMPROVEMENT, 12" POLY. HMA BINDER COURSE, 1.0" POLY. HMA SURFACE COURSE, 1.75"
TREATMENT B	POLY. HMA BINDER COURSE, 1.0" POLY. HMA SURFACE COURSE, 1.75"
TREATMENT C	HMA BASE COURSE, 11" POLY. HMA SURFACE COURSE, 2"
TREATMENT D	POLY. HMA SURFACE COURSE, 2"
TREATMENT E	AGG SUBGRADE IMPROVEMENT 12" HMA SHOULDERS, 8" AGGREGATE SHOULDERS, TYPE B, 8"

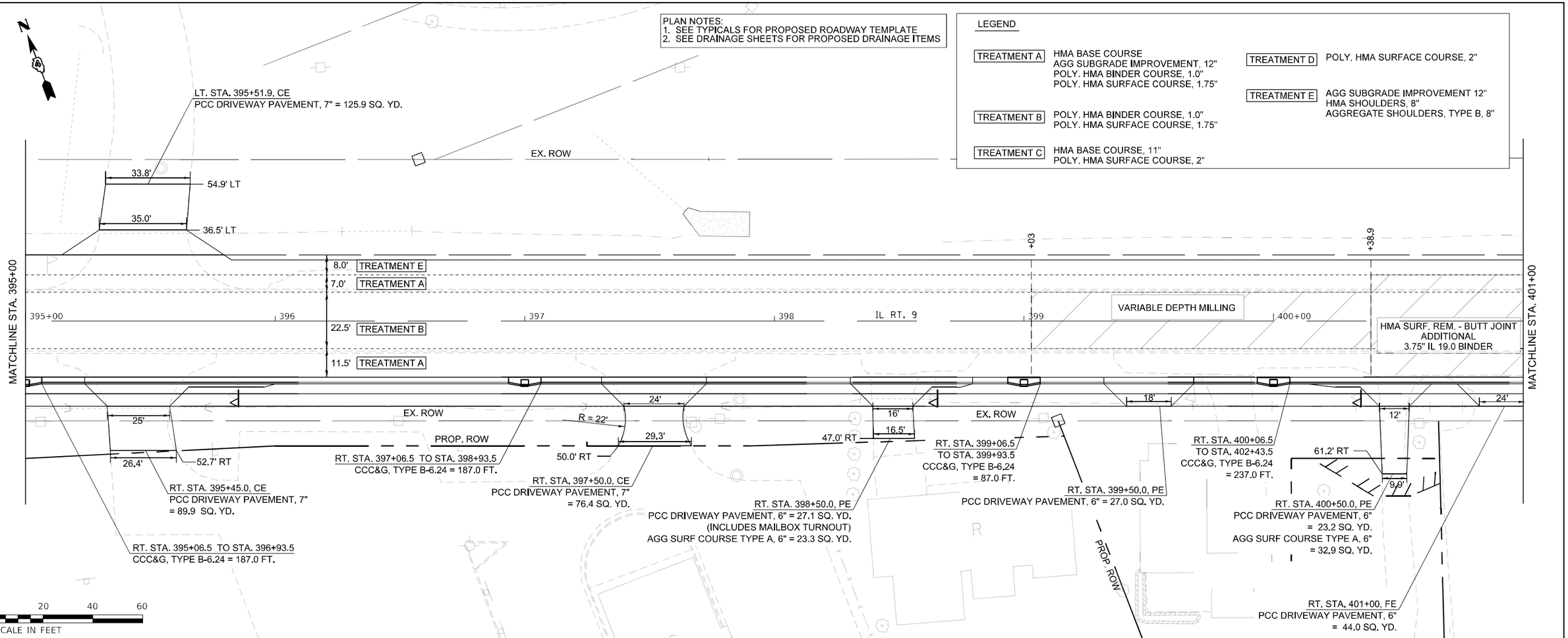

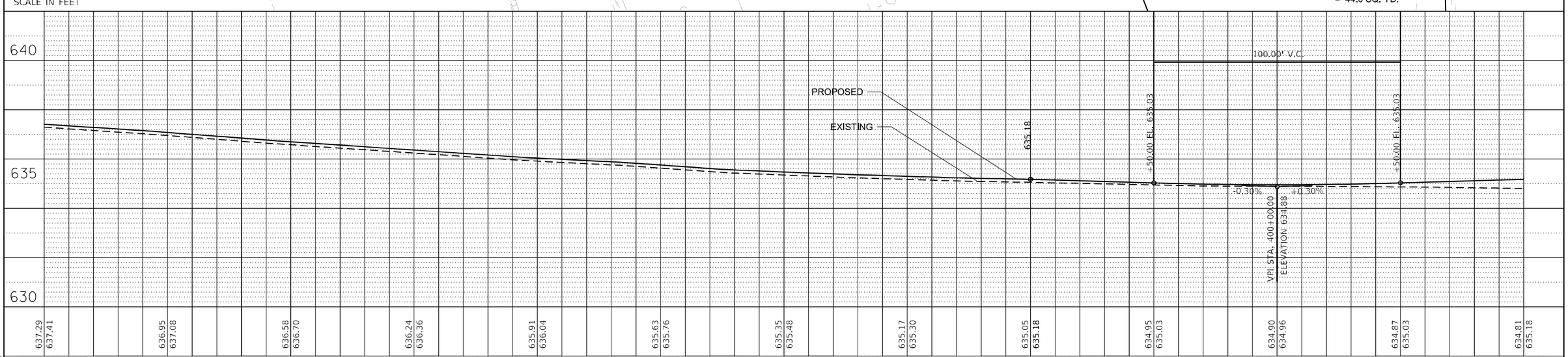

USER NAME = $USER$	DESIGNED -	REVISED -	
	DRAWN -	REVISED -	
PLOT SCALE = $SCALE$	CHECKED -	REVISED -	
PLOT DATE = $DATE$	DATE -	REVISED -	

STATE OF ILLINOIS
DEPARTMENT OF TRANSPORTATION

PLAN & PROFILE
IL 9 (PEARL STREET)

SCALE: SHEET $S OF $OS SHEETS STA. 395+00 TO STA. 401+00

F.A.P. RTE.	SECTION	COUNTY	TOTAL SHEETS	SHEET NO.
693	118RS-8.W-2	TAZEWELL	292	77

CONTRACT NO. 68A65

ILLINOIS FED. AID PROJECT

PLAN
SURVEYED
PLOTTED
ALIGNMENT CHECKED
RT. OF WAY CHECKED
CADD FILE NAME
NOTE BOOK NO.
BY
DATE

PROFILE
SURVEYED
GRADES CHECKED
B.M. NOTED
STRUCTURE NOTATIONS CHKD
NOTE BOOK NO.
BY
DATE

MODEL: $MODEL$NAME
FILE NAME: $FILE$S

PLAN NOTES:
1. SEE TYPICALS FOR PROPOSED ROADWAY TEMPLATE
2. SEE DRAINAGE SHEETS FOR PROPOSED DRAINAGE ITEMS

LEGEND

TREATMENT A	HMA BASE COURSE AGG SUBGRADE IMPROVEMENT, 12" POLY. HMA BINDER COURSE, 1.0" POLY. HMA SURFACE COURSE, 1.75"
TREATMENT B	POLY. HMA BINDER COURSE, 1.0" POLY. HMA SURFACE COURSE, 1.75"
TREATMENT C	HMA BASE COURSE, 11" POLY. HMA SURFACE COURSE, 2"
TREATMENT D	POLY. HMA SURFACE COURSE, 2"
TREATMENT E	AGG SUBGRADE IMPROVEMENT 12" HMA SHOULDERS, 8" AGGREGATE SHOULDERS, TYPE B, 8"

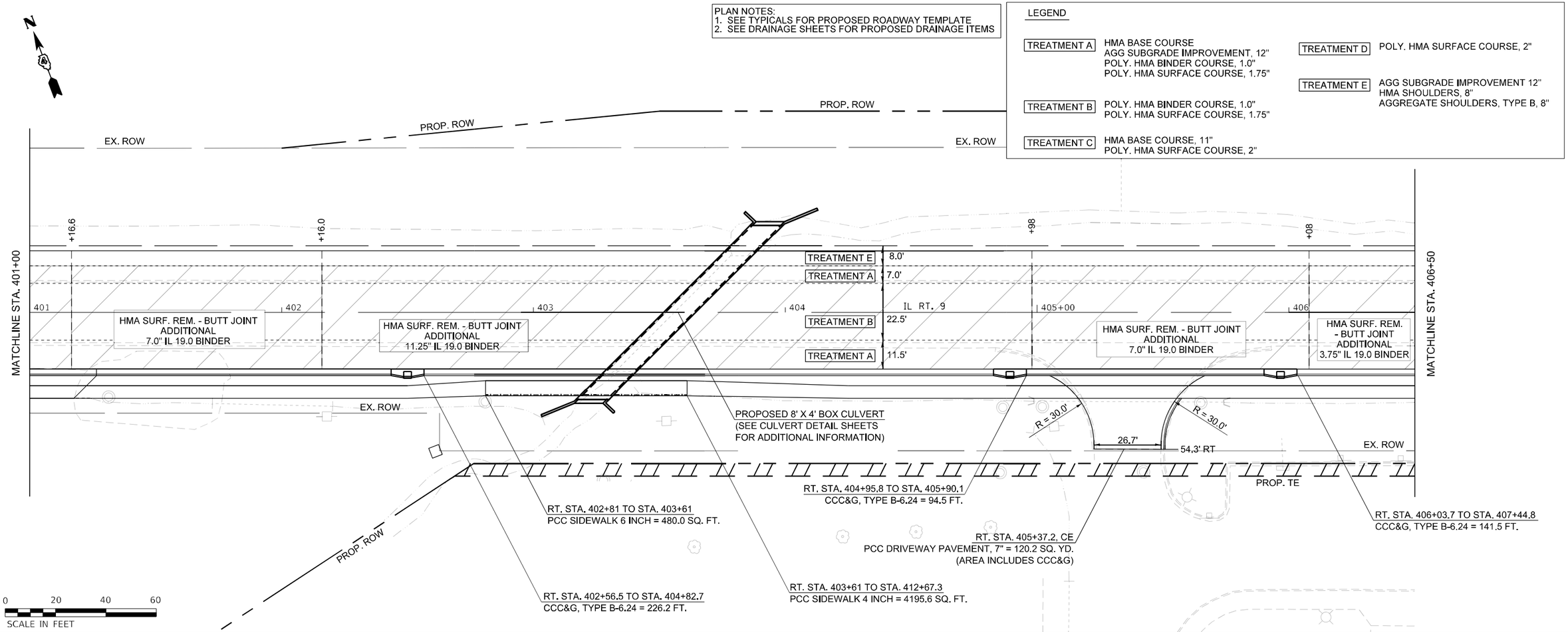

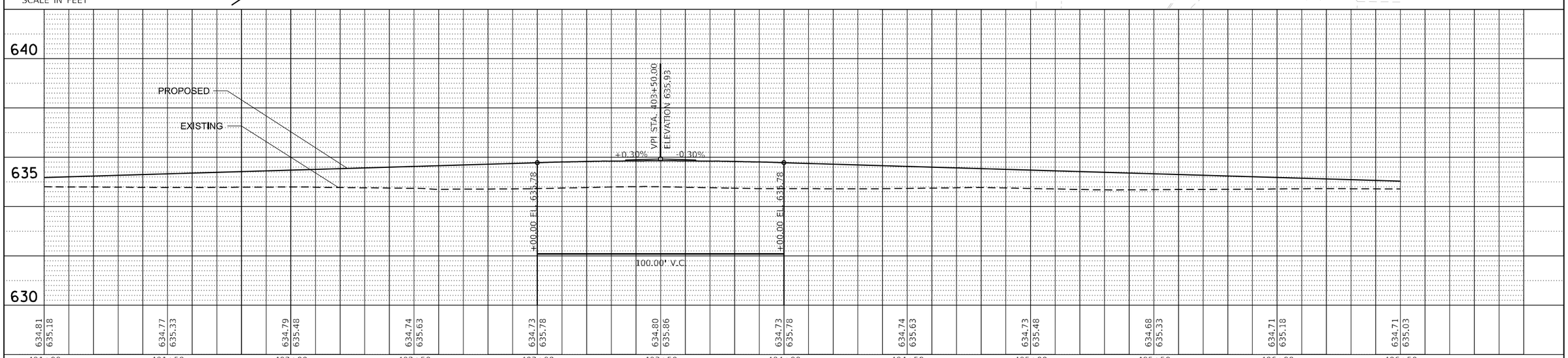

FILE NAME = $FILEL$	USER NAME = $USER$	DESIGNED -	REVISED -
		DRAWN -	REVISED -
	PLOT SCALE = $SCALE$	CHECKED -	REVISED -
$MODELNAME$	PLOT DATE = $DATE$	DATE -	REVISED -

STATE OF ILLINOIS
DEPARTMENT OF TRANSPORTATION

PLAN & PROFILE
IL 9 (PEARL STREET)

SCALE: | SHEET $S OF $OS SHEETS | STA. 401+00 TO STA. 407+00

F.A.P. RTE.	SECTION	COUNTY	TOTAL SHEETS	SHEET NO.
693	118RS-8.W-2	TAZEWELL	292	78

CONTRACT NO. 68A65

ILLINOIS FED. AID PROJECT

PLAN: SURVEYED / PLOTTED / ALIGNMENT CHECKED / RT. OF WAY CHECKED / CADD FILE NAME / NOTE BOOK NO. / BY / DATE

PROFILE: SURVEYED / PLOTTED / GRADES CHECKED / B.M. NOTED / STRUCTURE NOTAT'NS CHK'D / NOTE BOOK NO. / BY / DATE

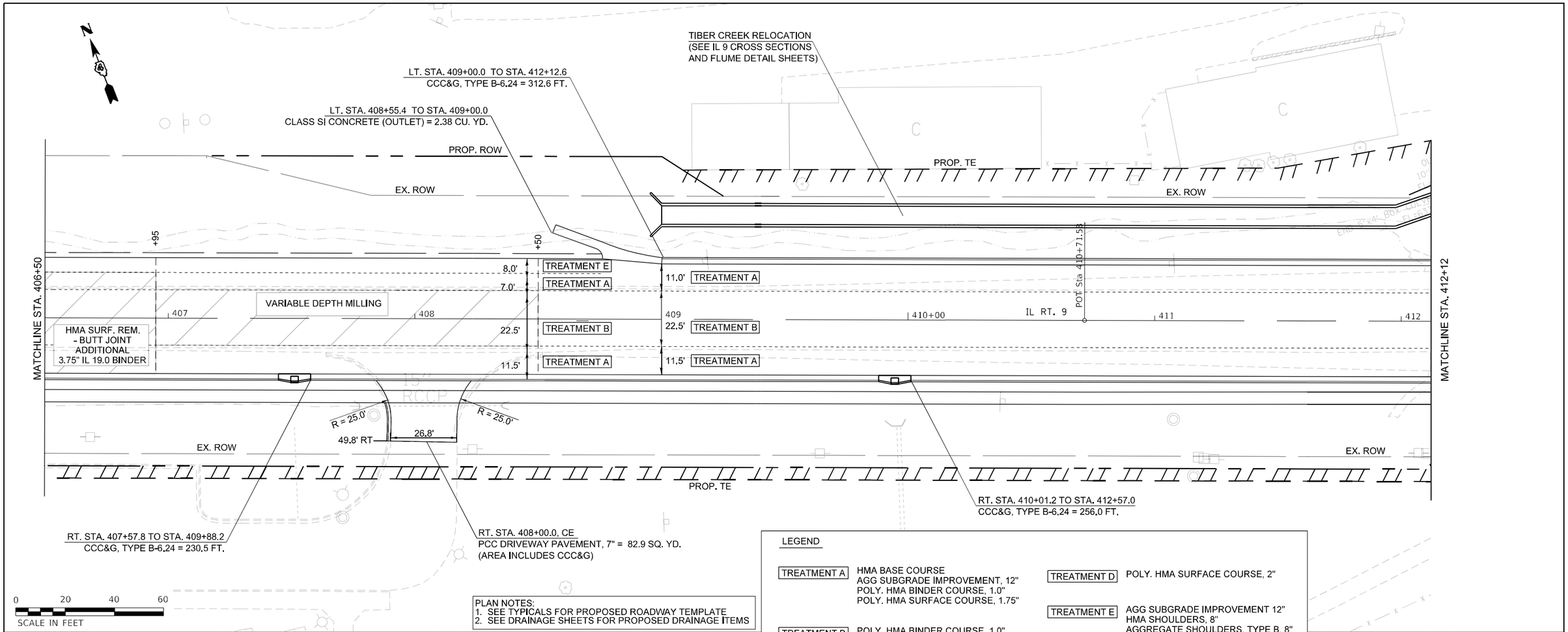

PLAN NOTES:
1. SEE TYPICALS FOR PROPOSED ROADWAY TEMPLATE
2. SEE DRAINAGE SHEETS FOR PROPOSED DRAINAGE ITEMS

LEGEND

TREATMENT A	HMA BASE COURSE AGG SUBGRADE IMPROVEMENT, 12" POLY. HMA BINDER COURSE, 1.0" POLY. HMA SURFACE COURSE, 1.75"
TREATMENT B	POLY. HMA BINDER COURSE, 1.0" POLY. HMA SURFACE COURSE, 1.75"
TREATMENT C	HMA BASE COURSE, 11" POLY. HMA SURFACE COURSE, 2"
TREATMENT D	POLY. HMA SURFACE COURSE, 2"
TREATMENT E	AGG SUBGRADE IMPROVEMENT 12" HMA SHOULDERS, 8" AGGREGATE SHOULDERS, TYPE B, 8"

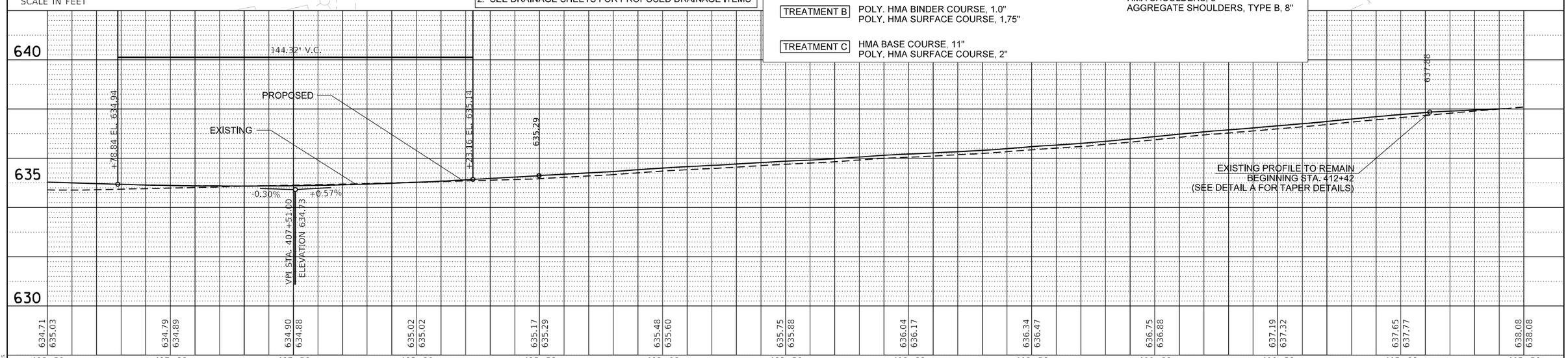

PLAN
SURVEYED
PLOTTED
ALIGNMENT CHECKED
R.O.W. CHECKED
CADD FILE NAME
NOTE BOOK NO.
BY
DATE

PROFILE
SURVEYED
PLOTTED
GRADES CHECKED
BM. NOTED
STRUCTURE NOTATIONS CHKD
NOTE BOOK NO.
BY
DATE

MODEL: $MODEL$NAME$
FILE NAME: $FILEL$

USER NAME = $USER$	DESIGNED -	REVISED -
	DRAWN -	REVISED -
PLOT SCALE = $SCALE$	CHECKED -	REVISED -
PLOT DATE = $DATE$	DATE -	REVISED -

STATE OF ILLINOIS
DEPARTMENT OF TRANSPORTATION

PLAN & PROFILE
IL 9 (PEARL STREET)

SCALE: SHEET $S OF $OS SHEETS STA. 395+00 TO STA. 401+00

F.A.P. RTE.	SECTION	COUNTY	TOTAL SHEETS	SHEET NO.
693	118RS-8.W-2	TAZEWELL	292	79

CONTRACT NO. 68A65

ILLINOIS FED. AID PROJECT

PLAN NOTES:
1. SEE TYPICALS FOR PROPOSED ROADWAY TEMPLATE
2. SEE DRAINAGE SHEETS FOR PROPOSED DRAINAGE ITEMS
3. SEE CROSS-SECTIONS FOR CENTERLINE ELEVATIONS

LEGEND

TREATMENT A	HMA BASE COURSE AGG SUBGRADE IMPROVEMENT, 12" POLY. HMA BINDER COURSE, 1.0" POLY. HMA SURFACE COURSE, 1.75"
TREATMENT B	POLY. HMA BINDER COURSE, 1.0" POLY. HMA SURFACE COURSE, 1.75"
TREATMENT C	HMA BASE COURSE, 11" POLY. HMA SURFACE COURSE, 2"
TREATMENT D	POLY. HMA SURFACE COURSE, 2"
TREATMENT E	AGG SUBGRADE IMPROVEMENT 12" HMA SHOULDERS, 8" AGGREGATE SHOULDERS, TYPE B, 8"

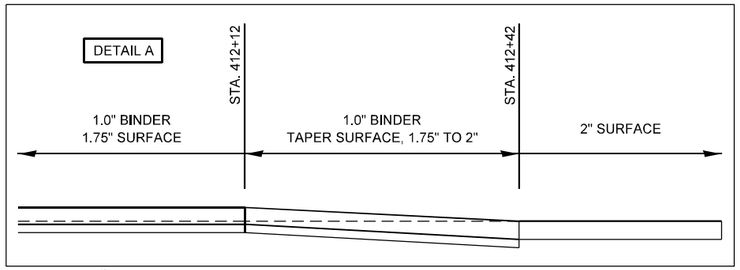

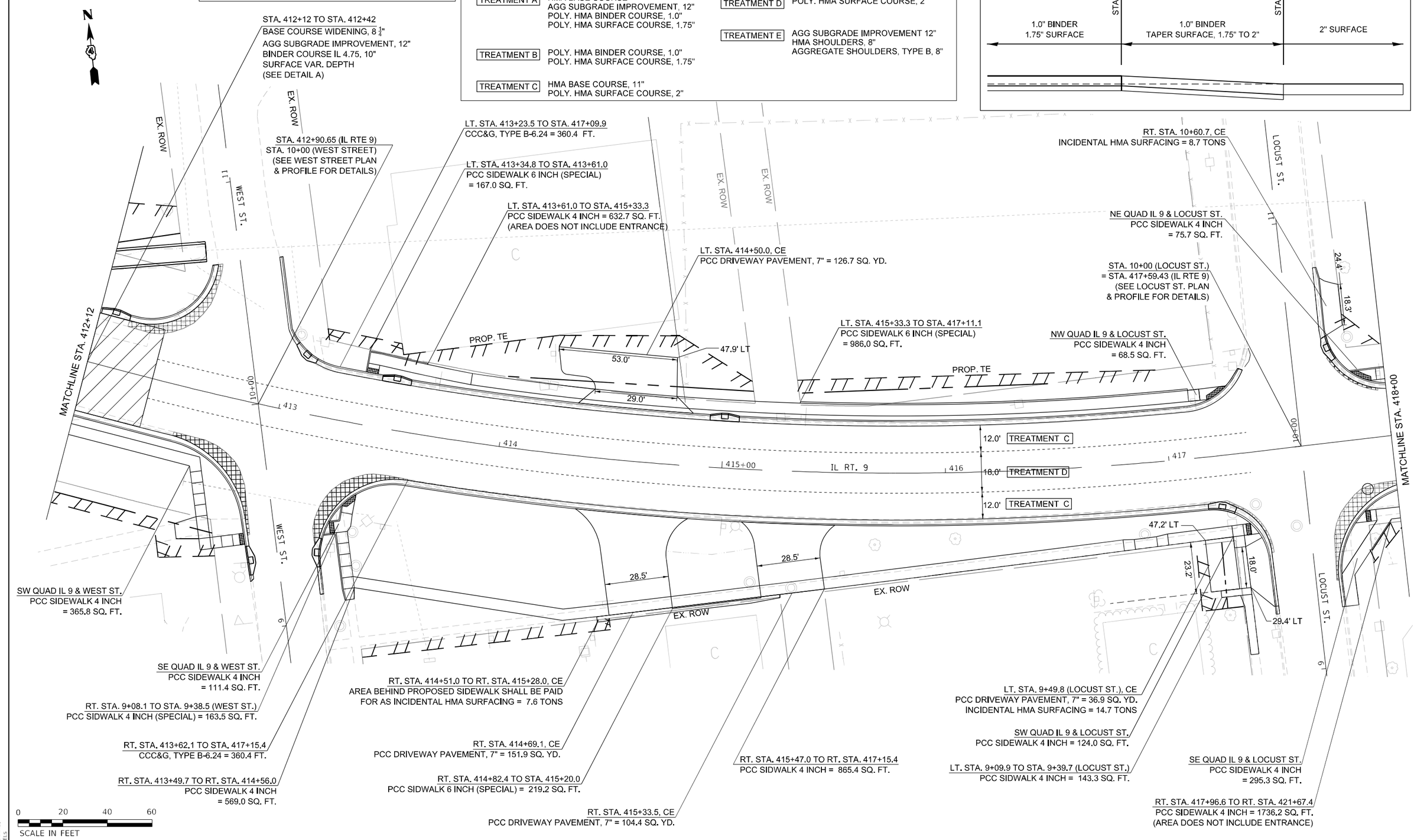

MODEL: $MODELNAME$
FILE NAME: $FILE$

USER NAME = $USER$	DESIGNED -	REVISED -	
	DRAWN -	REVISED -	
PLOT SCALE = $SCALE$	CHECKED -	REVISED -	
PLOT DATE = $DATE$	DATE -	REVISED -	

STATE OF ILLINOIS
DEPARTMENT OF TRANSPORTATION

PLAN
IL 9 (PEARL STREET)

SCALE: | SHEET $S OF $OS SHEETS | STA. TO STA.

F.A.P. RTE.	SECTION	COUNTY	TOTAL SHEETS	SHEET NO.
693	118RS-8.W-2	TAZEWELL	292	80

CONTRACT NO. 68A65

ILLINOIS | FED. AID PROJECT

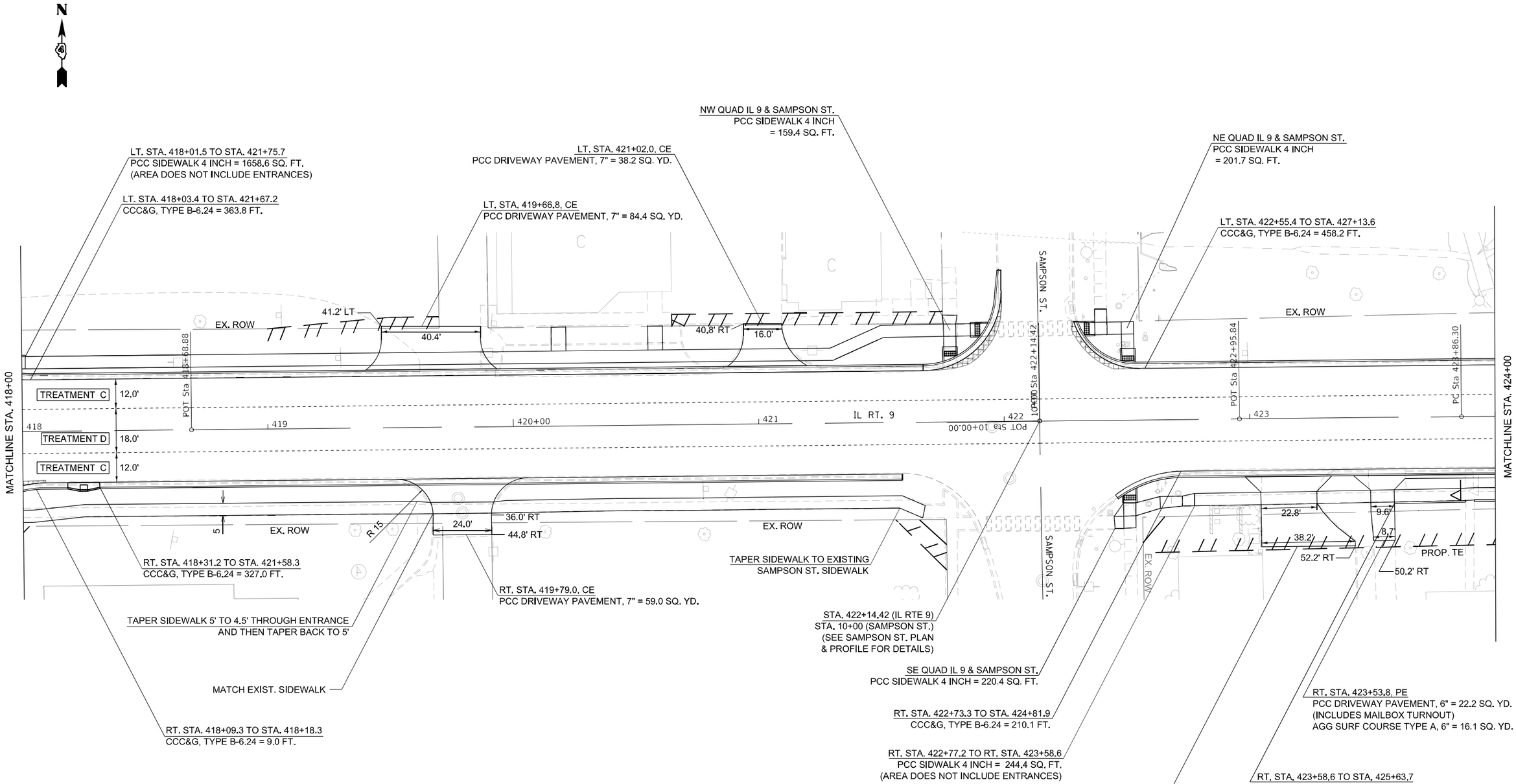

LEGEND

TREATMENT A	HMA BASE COURSE AGG SUBGRADE IMPROVEMENT, 12" POLY. HMA BINDER COURSE, 1.0" POLY. HMA SURFACE COURSE, 1.75"
TREATMENT B	POLY. HMA BINDER COURSE, 1.0" POLY. HMA SURFACE COURSE, 1.75"
TREATMENT C	HMA BASE COURSE, 11" POLY. HMA SURFACE COURSE, 2"
TREATMENT D	POLY. HMA SURFACE COURSE, 2"
TREATMENT E	AGG SUBGRADE IMPROVEMENT 12" HMA SHOULDERS, 8" AGGREGATE SHOULDERS, TYPE B, 8"

PLAN NOTES:
1. SEE TYPICALS FOR PROPOSED ROADWAY TEMPLATE
2. SEE DRAINAGE SHEETS FOR PROPOSED DRAINAGE ITEMS
3. SEE CROSS-SECTIONS FOR CENTERLINE ELEVATIONS

0 20 40 60
SCALE IN FEET

MODEL: $MODELNAME$
FILE NAME: $FILE$

USER NAME = $USER$	DESIGNED -	REVISED -
	DRAWN -	REVISED -
PLOT SCALE = $SCALE$	CHECKED -	REVISED -
PLOT DATE = $DATE$	DATE -	REVISED -

STATE OF ILLINOIS
DEPARTMENT OF TRANSPORTATION

PLAN
IL 9 (PEARL STREET)

SCALE: SHEET $S OF $OS SHEETS STA. TO STA.

F.A.P. RTE.	SECTION	COUNTY	TOTAL SHEETS	SHEET NO.
693	118RS-8,W-2	TAZEWELL	292	81

CONTRACT NO. 68A65
ILLINOIS FED. AID PROJECT

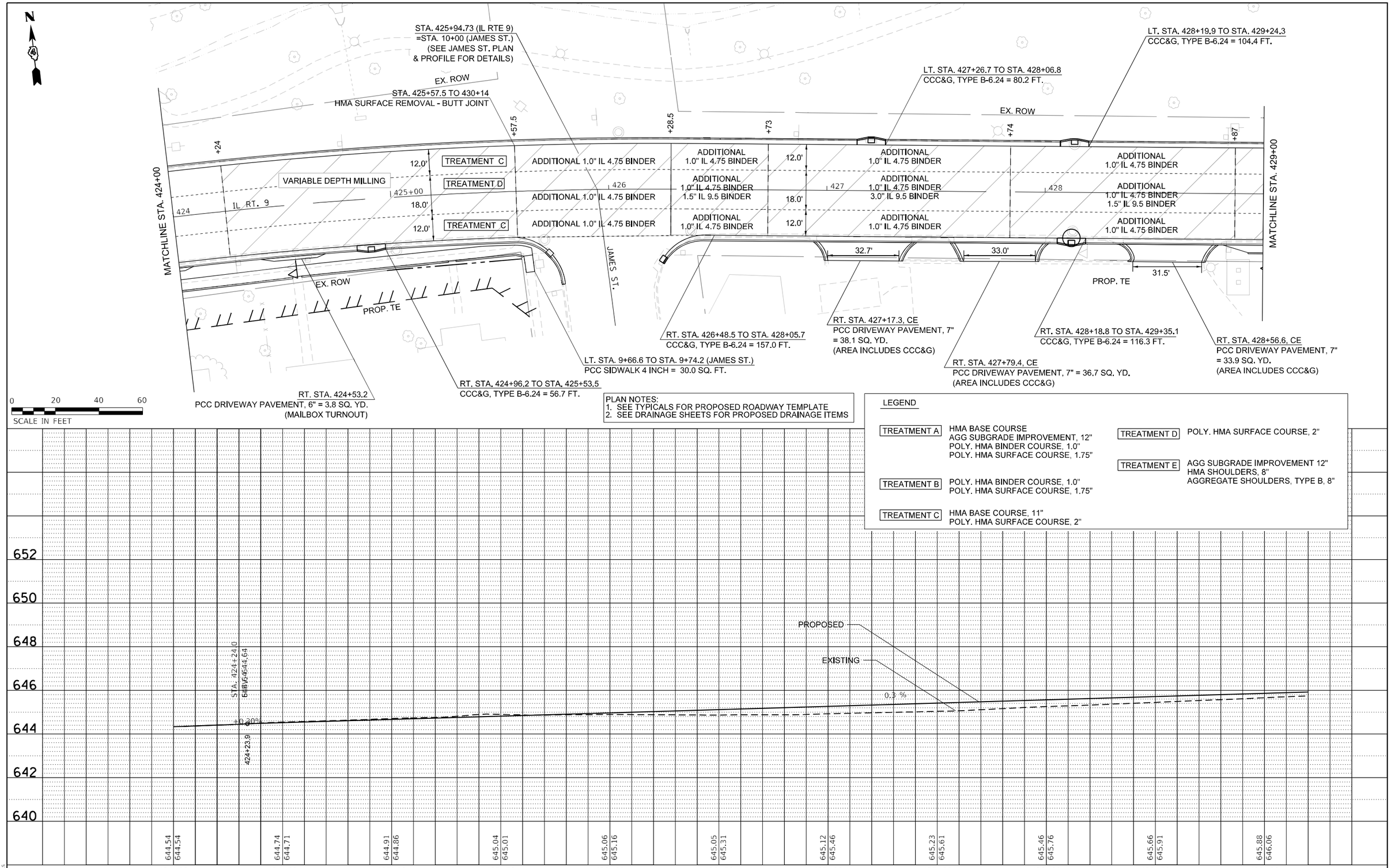

USER NAME = $USER$	DESIGNED -	REVISED -	
	DRAWN -	REVISED -	
PLOT SCALE = $SCALE$	CHECKED -	REVISED -	
PLOT DATE = $DATE$	DATE -	REVISED -	

STATE OF ILLINOIS
DEPARTMENT OF TRANSPORTATION

PLAN & PROFILE
IL 9 (PEARL STREET)

SCALE: SHEET $S OF $OS SHEETS STA. TO STA.

F.A.P. RTE.	SECTION	COUNTY	TOTAL SHEETS	SHEET NO.
693	118RS-8.W-2	TAZEWELL	292	82

CONTRACT NO. 68A65

ILLINOIS FED. AID PROJECT

PLAN NOTES:
1. SEE TYPICALS FOR PROPOSED ROADWAY TEMPLATE
2. SEE DRAINAGE SHEETS FOR PROPOSED DRAINAGE ITEMS

LEGEND

TREATMENT A	HMA BASE COURSE AGG SUBGRADE IMPROVEMENT, 12" POLY. HMA BINDER COURSE, 1.0" POLY. HMA SURFACE COURSE, 1.75"
TREATMENT B	POLY. HMA BINDER COURSE, 1.0" POLY. HMA SURFACE COURSE, 1.75"
TREATMENT C	HMA BASE COURSE, 11" POLY. HMA SURFACE COURSE, 2"
TREATMENT D	POLY. HMA SURFACE COURSE, 2"
TREATMENT E	AGG SUBGRADE IMPROVEMENT 12" HMA SHOULDERS, 8" AGGREGATE SHOULDERS, TYPE B, 8"

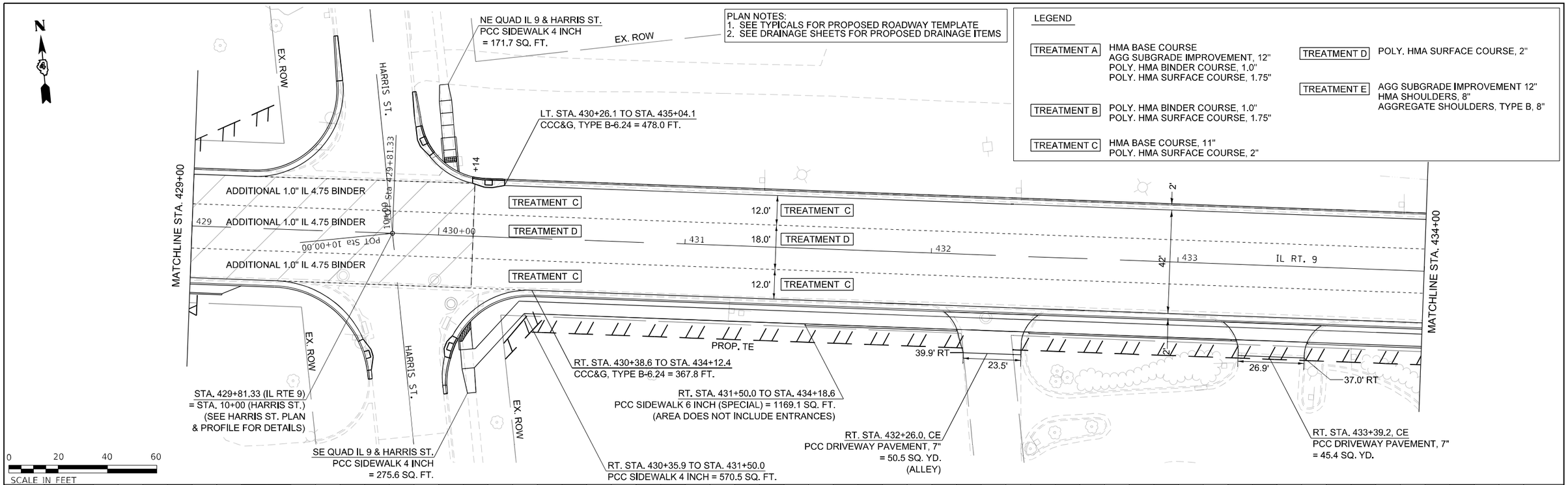

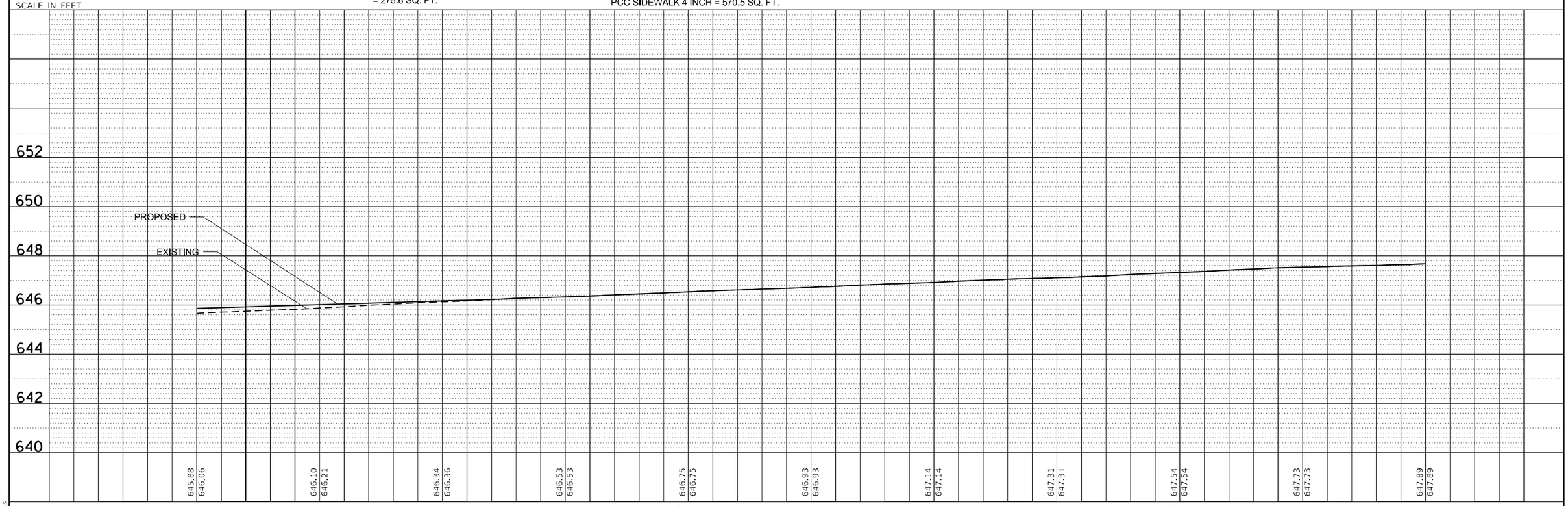

USER NAME = $USER$	DESIGNED -	REVISED -	STATE OF ILLINOIS DEPARTMENT OF TRANSPORTATION
	DRAWN -	REVISED -	
PLOT SCALE = $SCALE$	CHECKED -	REVISED -	
PLOT DATE = $DATE$	DATE -	REVISED -	

PLAN & PROFILE
IL 9 (PEARL STREET)

SCALE: SHEET $S OF $OS SHEETS STA. TO STA.

F.A.P. RTE.	SECTION	COUNTY	TOTAL SHEETS	SHEET NO.
693	118RS-8.W-2	TAZEWELL	292	83

CONTRACT NO. 68A65

ILLINOIS | FED. AID PROJECT

PLAN
NOTE BOOK NO.
SURVEYED
PLOTTED
ALIGNMENT CHECKED
RT. OF WAY CHECKED
CADD FILE NAME
BY
DATE

PROFILE
NOTE BOOK NO.
SURVEYED
PLOTTED
GRADES CHECKED
B.M. NOTED
STRUCTURE NOTATIONS CHKD
BY
DATE

MODEL: $MODELNAME$
FILE NAME: $FILEL$

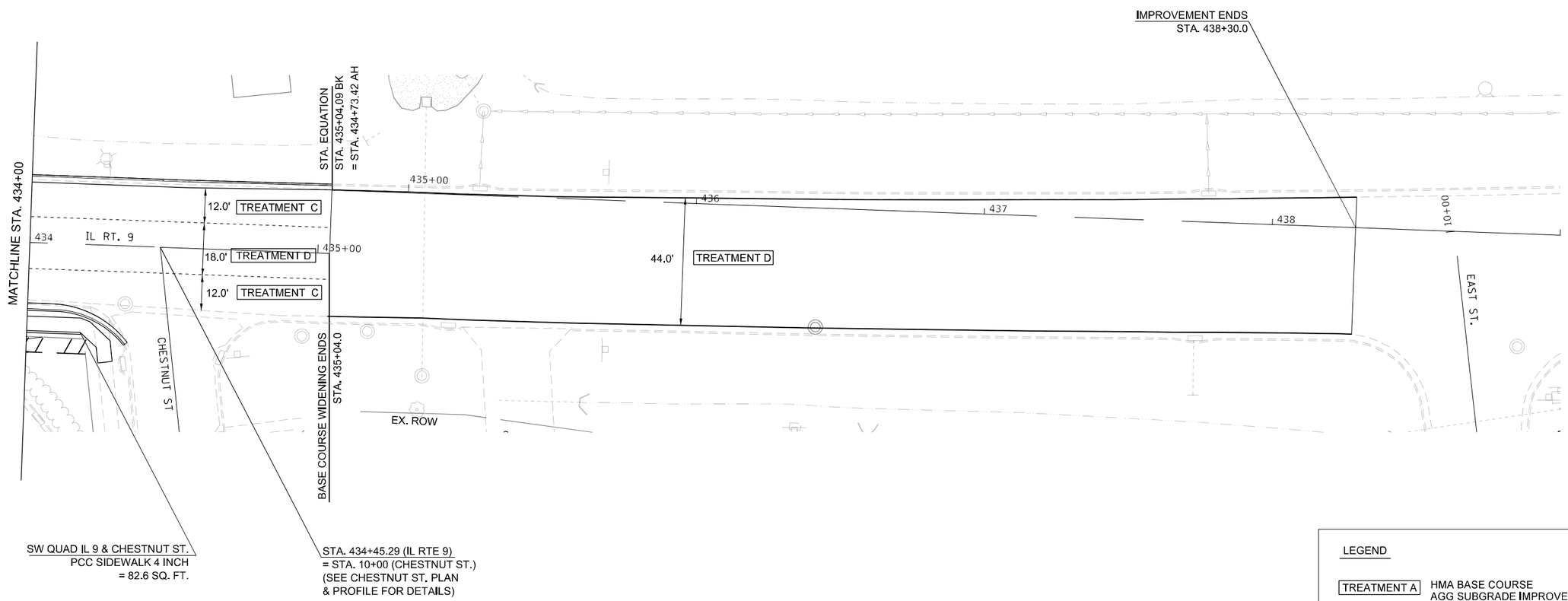

LEGEND

TREATMENT A	HMA BASE COURSE AGG SUBGRADE IMPROVEMENT, 12" POLY. HMA BINDER COURSE, 1.0" POLY. HMA SURFACE COURSE, 1.75"
TREATMENT B	POLY. HMA BINDER COURSE, 1.0" POLY. HMA SURFACE COURSE, 1.75"
TREATMENT C	HMA BASE COURSE, 11" POLY. HMA SURFACE COURSE, 2"
TREATMENT D	POLY. HMA SURFACE COURSE, 2"
TREATMENT E	AGG SUBGRADE IMPROVEMENT 12" HMA SHOULDERS, 8" AGGREGATE SHOULDERS, TYPE B, 8"

PLAN NOTES:
1. SEE TYPICALS FOR PROPOSED ROADWAY TEMPLATE
2. SEE DRAINAGE SHEETS FOR PROPOSED DRAINAGE ITEMS
3. SEE CROSS-SECTIONS FOR CENTERLINE ELEVATIONS

0 20 40 60
SCALE IN FEET

MODEL: $MODELNAME$
FILE NAME: $FILE$

USER NAME = $USER$	DESIGNED -	REVISED -
	DRAWN -	REVISED -
PLOT SCALE = $SCALE$	CHECKED -	REVISED -
PLOT DATE = $DATE$	DATE -	REVISED -

STATE OF ILLINOIS
DEPARTMENT OF TRANSPORTATION

PLAN
IL 9 (PEARL STREET)

SCALE: | SHEET $S OF $OS SHEETS | STA. TO STA.

F.A.P. RTE.	SECTION	COUNTY	TOTAL SHEETS	SHEET NO.
693	118RS-8,W-2	TAZEWELL	292	84

CONTRACT NO. 68A65

ILLINOIS | FED. AID PROJECT

Old Rt. 9								
	Station	Alignment	Offset (FT)		Elev.	Distance between points on curve (FT)		Slope (%)
A	391+77.0	IL 9	22.5	RT	639.27			
B	391+96.1	IL 9	31.6	RT	638.27	A-B	21.93	-4.56
	9+67.7	Old Rt. 9	17.9	LT				
C	9+62.0	Old Rt. 9	14.2	LT	638.02	B-C	6.85	-3.65
D	9+63.0	Old Rt. 9	13.3	RT	638.08			
E	9+69.0	Old Rt. 9	16.5	RT	638.29	D-E	6.85	3.07
	392+30.5	IL 9	31.6	RT				
F	392+49.3	IL 9	22.5	RT	638.66	E-F	21.60	1.71

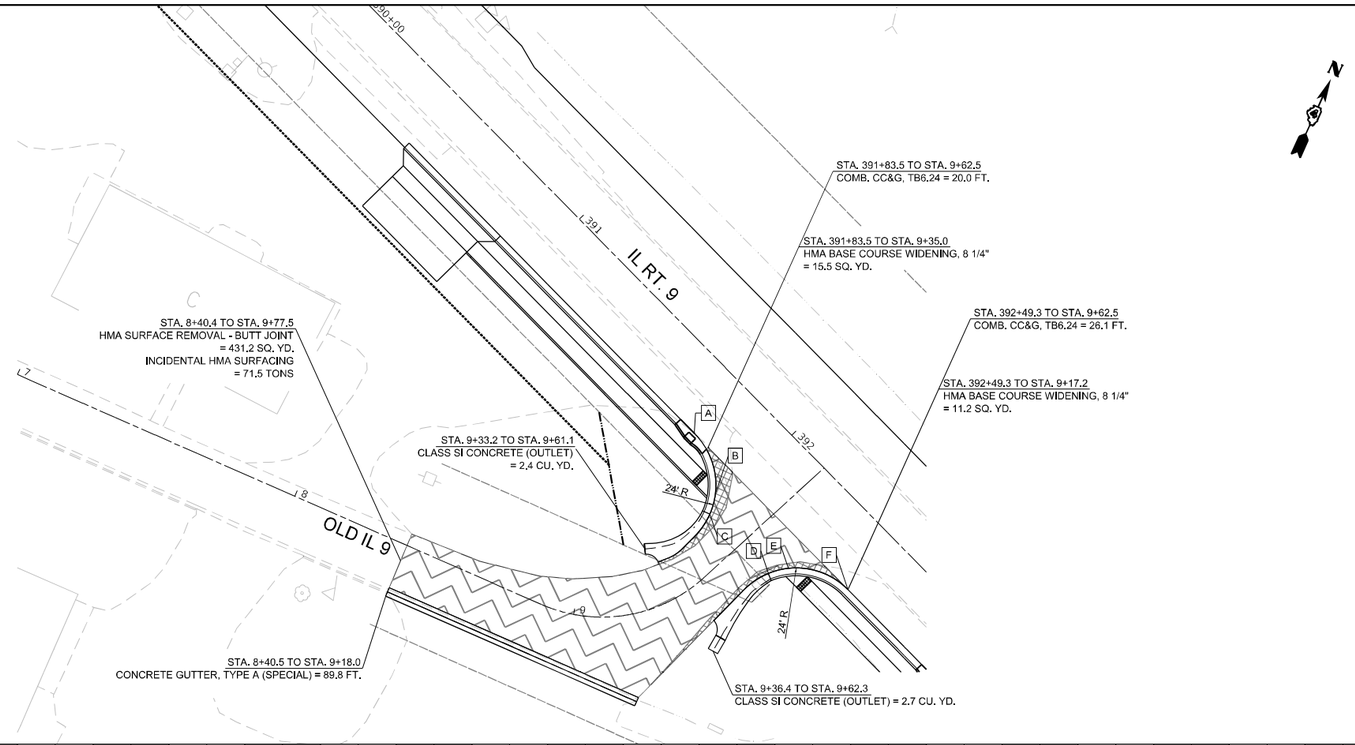

LEGEND

- HMA SURF. REMOVAL - BUTT JOINT
- PCC PAVEMENT 7" (JOINTED)
- BSE CSE WIDENING

NOTE:
SEE EROSION/DRAINAGE SHEETS & ADA DETAIL SHEETS FOR ADDITIONAL INFORMATION

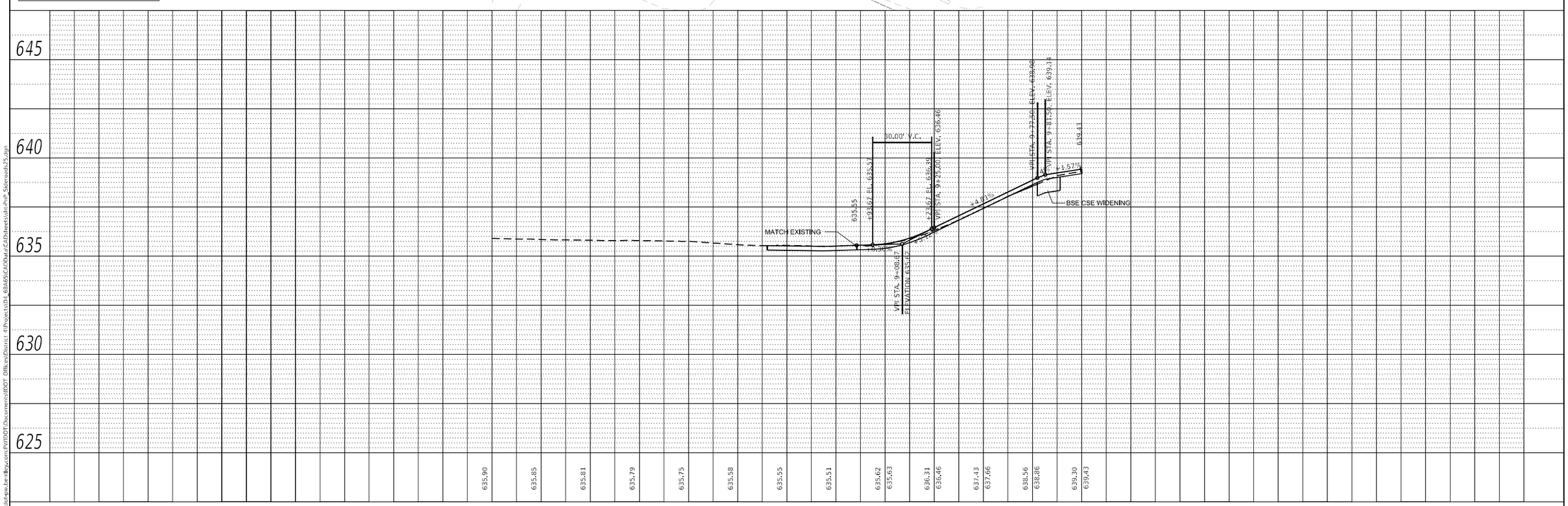

PLAN: SURVEYED ___ PLOTTED ___ ALIGNMENT CHECKED ___ R/W CHECKED ___ CADD FILE NAME ___ NOTE BOOK NO. ___ BY ___ DATE ___

PROFILE: SURVEYED ___ PLOTTED ___ GRADES CHECKED ___ BLR. NOTED ___ STRUCTURE NOTATIONS CHKD ___ NOTE BOOK NO. ___ BY ___ DATE ___

MODEL: Default
FILE NAME: pw:\\ildot-pw.bentley.com:PW\IDOT\Documents\IDOT Offices\District 4\Projects\D1_68A65\CADData\CADsheets\sht-Prp_Sideroads25.dgn

USER NAME = $USER$	DESIGNED -	REVISED -	
	DRAWN -	REVISED -	
PLOT SCALE = 1:50	CHECKED -	REVISED -	
PLOT DATE = 2/14/2025	DATE -	REVISED -	

STATE OF ILLINOIS
DEPARTMENT OF TRANSPORTATION

SIDE ROAD PLAN & PROFILE
OLD IL 9

SCALE: | SHEET 1 OF 4 SHEETS | STA. | TO STA.

F.A.P. RTE.	SECTION	COUNTY	TOTAL SHEETS	SHEET NO.
693	118RS-8.W-2	TAZEWELL	292	85

CONTRACT NO. 68A65

ILLINOIS | FED. AID PROJECT

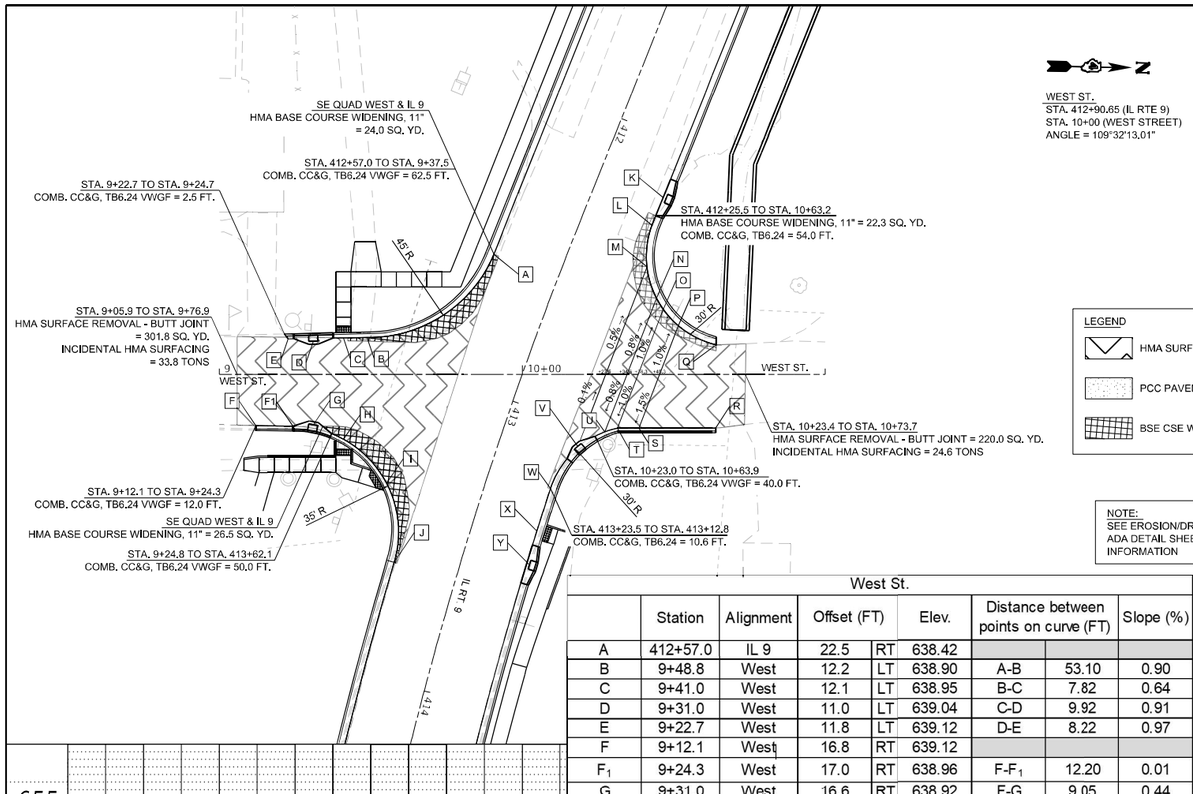

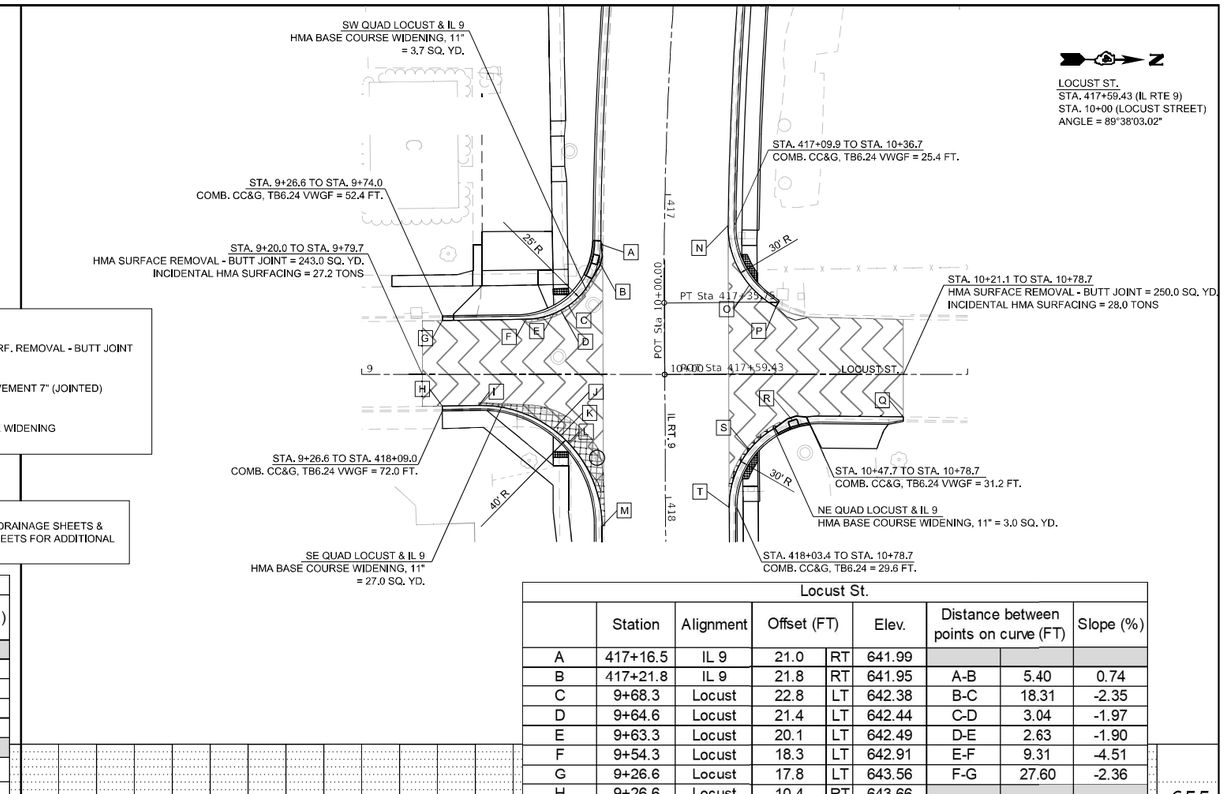

LEGEND

- HMA SURF. REMOVAL - BUTT JOINT
- PCC PAVEMENT 7" (JOINTED)
- BSE CSE WIDENING

NOTE:
SEE EROSION/DRAINAGE SHEETS & ADA DETAIL SHEETS FOR ADDITIONAL INFORMATION

West St.

	Station	Alignment	Offset (FT)		Elev.	Distance between points on curve (FT)		Slope (%)
A	412+57.0	IL 9	22.5	RT	638.42			
B	9+48.8	West	12.2	LT	638.90	A-B	53.10	0.90
C	9+41.0	West	12.1	LT	638.95	B-C	7.82	0.64
D	9+31.0	West	11.0	LT	639.04	C-D	9.92	0.91
E	9+22.7	West	11.8	LT	639.12	D-E	8.22	0.97
F	9+12.1	West	16.8	RT	639.12			
F_1	9+24.3	West	17.0	RT	638.96	F-F_1	12.20	0.01
G	9+31.0	West	16.6	RT	638.92	F-G	9.05	0.44
H	9+41.0	West	21.3	RT	638.95	G-H	10.83	-0.28
I	413+38.23	IL 9	31.2	RT	639.15	H-I	20.69	-0.97
J	413+62.10	IL 9	21.0	RT	639.42	I-J	26.85	-1.01
K	412+19.06	IL 9	22.5	LT	637.48			
L	412+28.92	IL 9	22.5	LT	637.52	K-L	9.87	0.41
M	10+41.20	West	35.6	LT	637.67	L-M	14.00	1.07
N	10+44.30	West	25.3	LT	637.77	M-N	10.80	0.93
O	10+46.60	West	21.6	LT	637.84	N-O	4.35	1.61
P	10+51.50	West	16.2	LT	638.04	O-P	7.30	2.74
Q	10+64.04	West	9.9	LT	638.43	P-Q	50.64	0.77
R	10+63.9	West	17.6	RT	638.74			
S	10+38.50	West	17.7	RT	637.92	R-S	25.38	-3.23
T	10+31.46	West	17.7	RT	637.88	S-T	7.03	-0.57
U	10+27.3	West	18.9	RT	637.83	T-U	4.35	-1.15
V	10+18.34	West	23.7	RT	637.79	U-V	10.13	-0.39
	413+08.16	IL 9	26.1	LT				
W	413+23.51	IL 9	21.0	LT	638.05	V-W	16.64	1.56
X	413+38.47	IL 9	21.0	LT	638.15	W-X	14.74	0.68
Y	413+50.00	IL 9	21.0	LT	638.25	X-Y	11.34	0.88

Locust St.

	Station	Alignment	Offset (FT)		Elev.	Distance between points on curve (FT)		Slope (%)
A	417+16.5	IL 9	21.0	RT	641.99			
B	417+21.8	IL 9	21.8	RT	641.95	A-B	5.40	0.74
C	9+68.3	Locust	22.8	LT	642.38	B-C	18.31	-2.35
D	9+64.6	Locust	21.4	LT	642.44	C-D	3.04	-1.97
E	9+63.3	Locust	20.1	LT	642.49	D-E	2.63	-1.90
F	9+54.3	Locust	18.3	LT	642.91	E-F	9.31	-4.51
G	9+26.6	Locust	17.8	LT	643.56	F-G	27.60	-2.36
H	9+26.6	Locust	10.4	RT	643.66			
I	9+38.6	Locust	10.2	RT	643.22	H-I	12.02	3.66
J	9+63.2	Locust	18.1	RT	642.32	I-J	26.30	3.42
K	9+65.7	Locust	20.2	RT	642.24	J-K	3.25	2.46
L	9+68.2	Locust	22.5	RT	642.15	K-L	3.47	2.59
M	418+09.30	IL 9	21.0	RT	641.68	L-M	30.23	1.55
N	417+09.90	IL 9	21.0	LT	640.90			
O	10+28.00	Locust	29.5	LT	640.98	N-O	21.35	0.37
P	10+36.80	Locust	22.4	LT	640.86	O-P	11.39	-1.05
Q	10+78.70	Locust	13.7	RT	641.33			
R	10+42.20	Locust	15.1	RT	640.94	Q-R	36.60	-1.07
	417+73.87	IL 9	41.8	LT				
S	10+28.00	Locust	24.8	RT	641.15	R-S	17.49	1.20
T	418+03.40	IL 9	21.0	LT	641.53	S-T	20.60	1.84

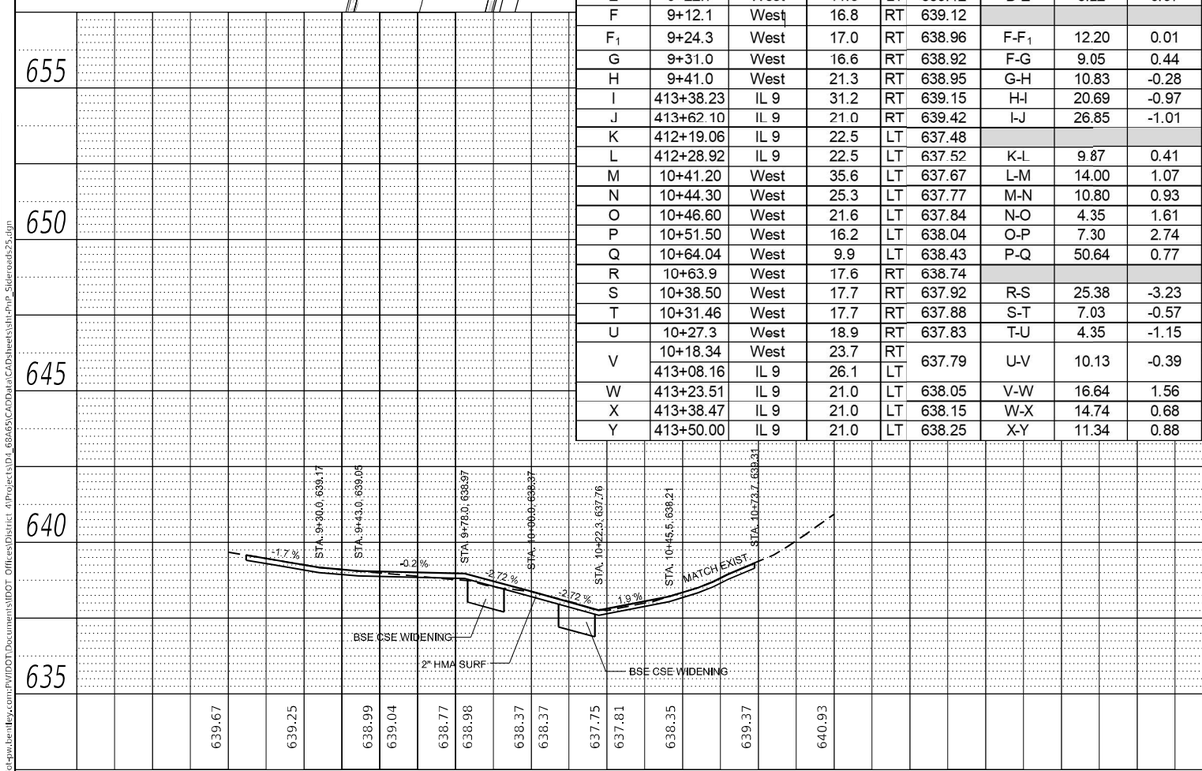

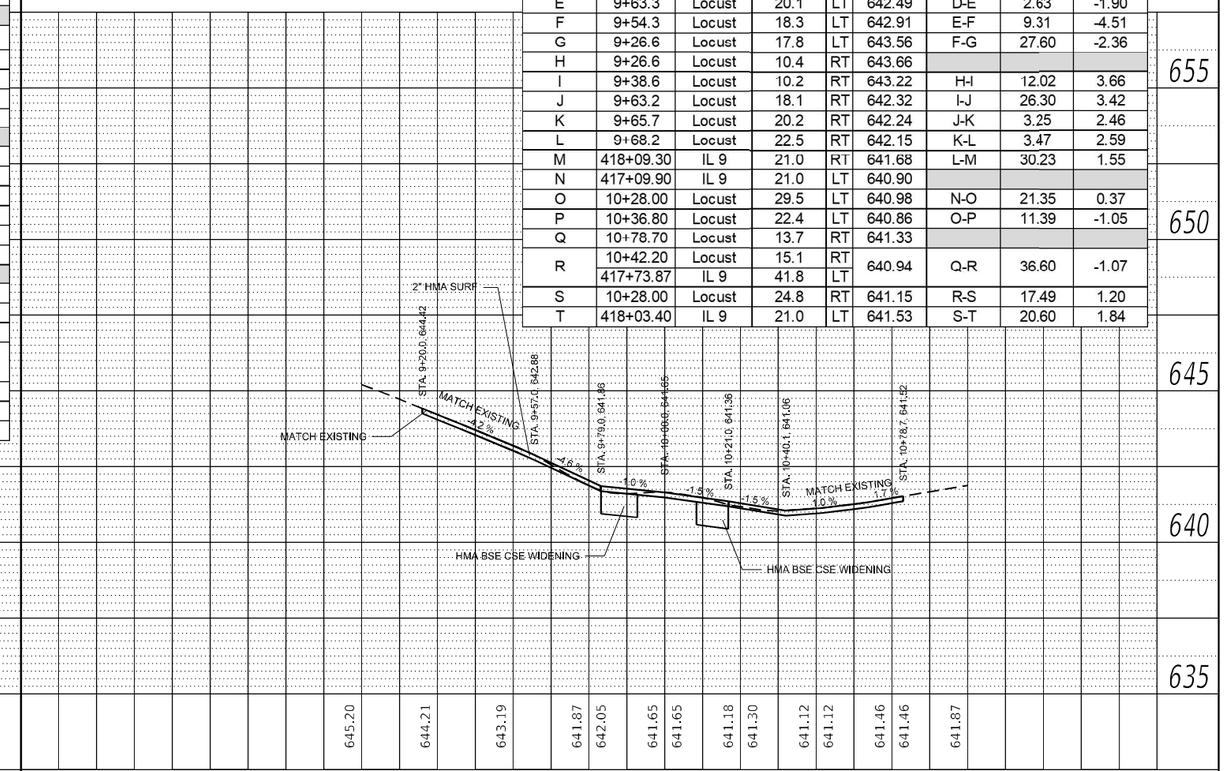

PLAN — SURVEYED / PLOTTED / ALIGNMENT CHECKED / R.O.W. CHECKED / CADD FILE NAME / NOTE BOOK NO. / BY / DATE

PROFILE — SURVEYED / PLOTTED / GRADES CHECKED / BM. NOTED / STRUCTURE NOTATNS CHKD / NOTE BOOK NO. / BY / DATE

MODEL: Default
FILE NAME: pw:\\ildot-pw.bentley.com:PWIDOT\Documents\IDOT Offices\District 4\Projects\D4_68A65\CADData\CADsheets\sht-PnP_Sideroads25.dgn

USER NAME = $USER$	DESIGNED -	REVISED -	
	DRAWN -	REVISED -	
PLOT SCALE = 1:50	CHECKED -	REVISED -	
PLOT DATE = 2/14/2025	DATE -	REVISED -	

STATE OF ILLINOIS
DEPARTMENT OF TRANSPORTATION

SIDE ROAD PLAN & PROFILE
WEST ST. & LOCUST ST.

SCALE: | SHEET 2 OF 4 SHEETS | STA. | TO STA.

F.A.P. RTE.	SECTION	COUNTY	TOTAL SHEETS	SHEET NO.
693	118RS-8.W-2	TAZEWELL	292	86

CONTRACT NO. 68A65
ILLINOIS | FED. AID PROJECT

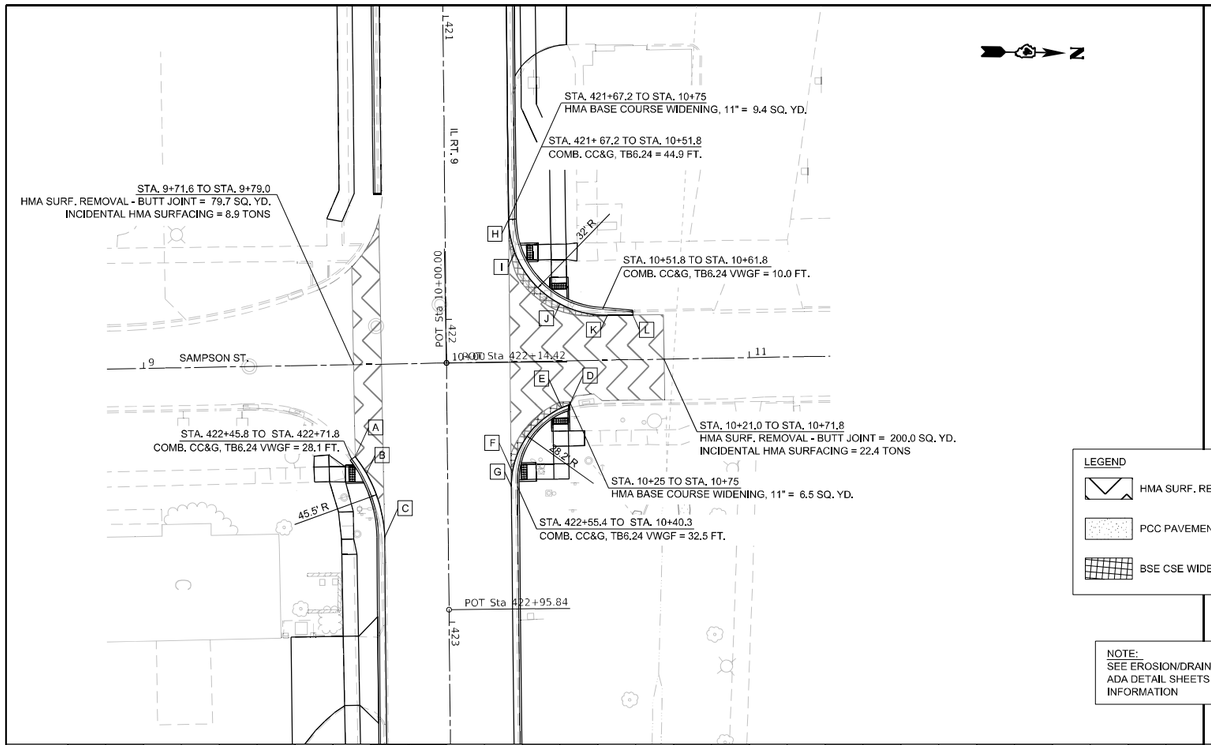

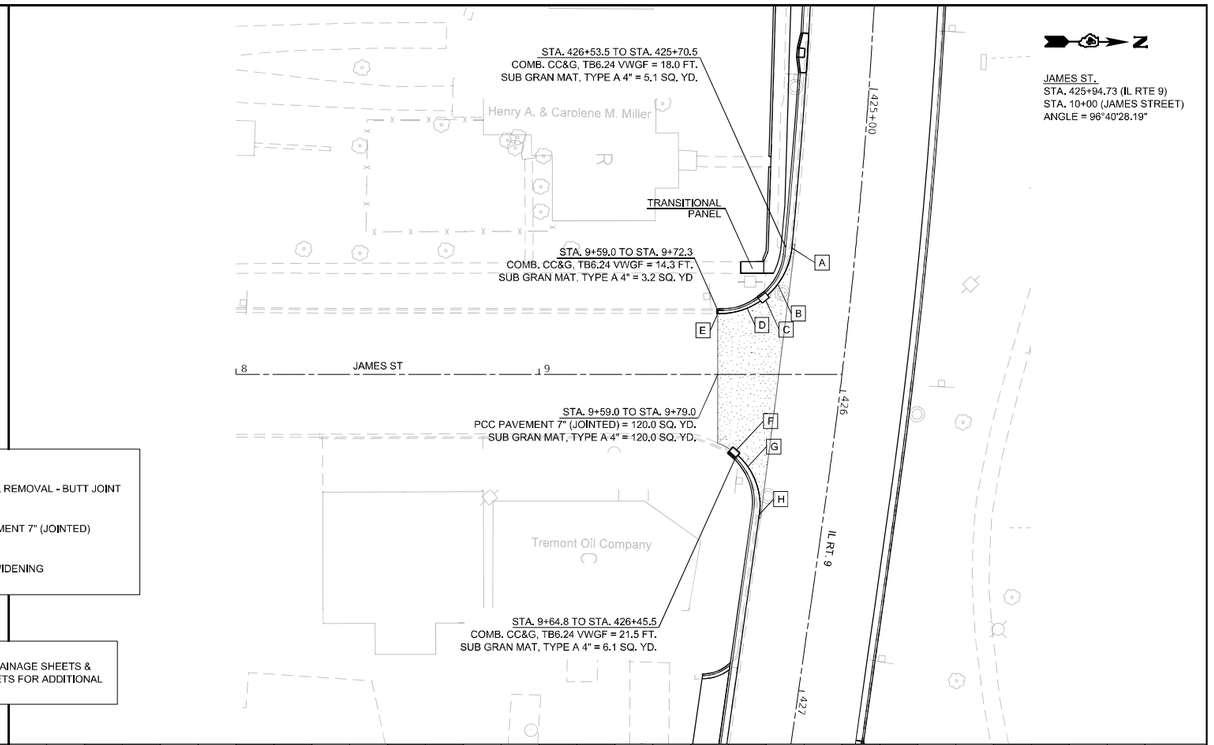

LEGEND

- HMA SURF. REMOVAL - BUTT JOINT
- PCC PAVEMENT 7" (JOINTED)
- BSE CSE WIDENING

NOTE:
SEE EROSION/DRAINAGE SHEETS & ADA DETAIL SHEETS FOR ADDITIONAL INFORMATION

Sampson St.

	Station	Alignment	Offset (FT)		Elev.	Distance between points on curve (FT)		Slope (%)
A	422+45.0	IL 9	30.5	RT	643.57			
B	422+50.7	IL 9	26.7	RT	643.70	A-B	6.76	-1.92
C	422+71.8	IL 9	21.0	RT	643.83	B-C	22.10	-0.59
D	10+40.4	Sampson	14.5	RT	643.47			
E	10+37.8	Sampson	15.4	RT	643.59	D-E	2.7	-4.44
F	422+50.7	IL 9	21.4	LT	643.78	E-F	27.92	-0.68
G	422+55.4	IL 9	21.0	LT	643.78	F-G	4.79	0.00
H	421+67.2	IL 9	21.0	LT	643.46			
I	421+78.1	IL 9	22.9	LT	643.48	H-I	11.17	-0.18
J	10+37.83	Sampson	18.8	LT	643.63	I-J	23.13	-0.65
K	10+53.40	Sampson	14.8	LT	643.79	J-K	16.22	-0.99
L	10+61.80	Sampson	14.7	LT	643.86	K-L	8.47	-0.83

James St.

	Station	Alignment	Offset (FT)		Elev.	Distance between points on curve (FT)	
A	425+53.5	IL 9	21.0	RT	644.54		
B	425+67.3	IL 9	24.4	RT	644.42	A-B	13.00
C	425+73.1	IL 9	27.8	RT	644.41	B-C	6.50
	9+74.8	James	24.5	LT			
D	9+68.7	James	21.9	RT	644.45	C-D	6.5
E	9+59.0	James	20.1	LT	644.61	D-E	9.89
F	9+65.1	James	24.9	RT	644.43		
	426+24.1	IL 9	31.4	RT			
G	426+29.1	IL 9	27.0	RT	644.53	F-G	6.50
H	426+44.2	IL 9	21.0	RT	644.98	G-H	17.9

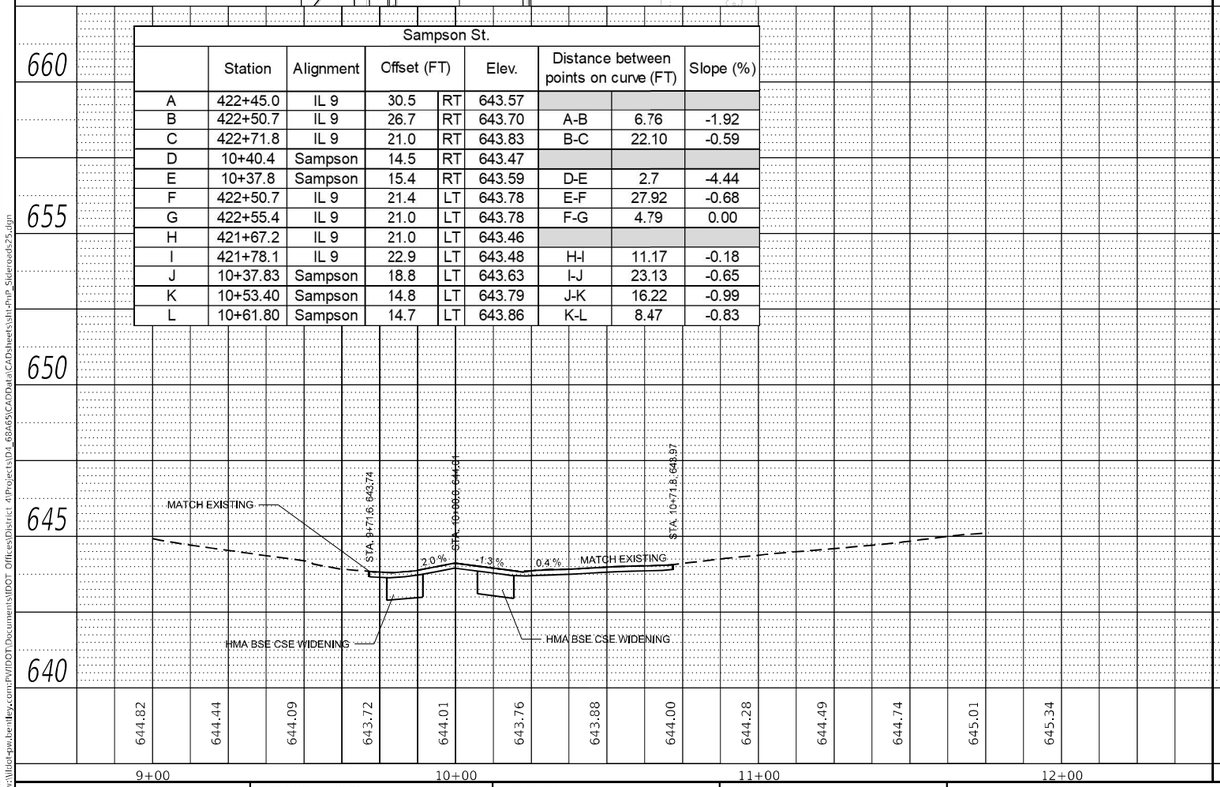

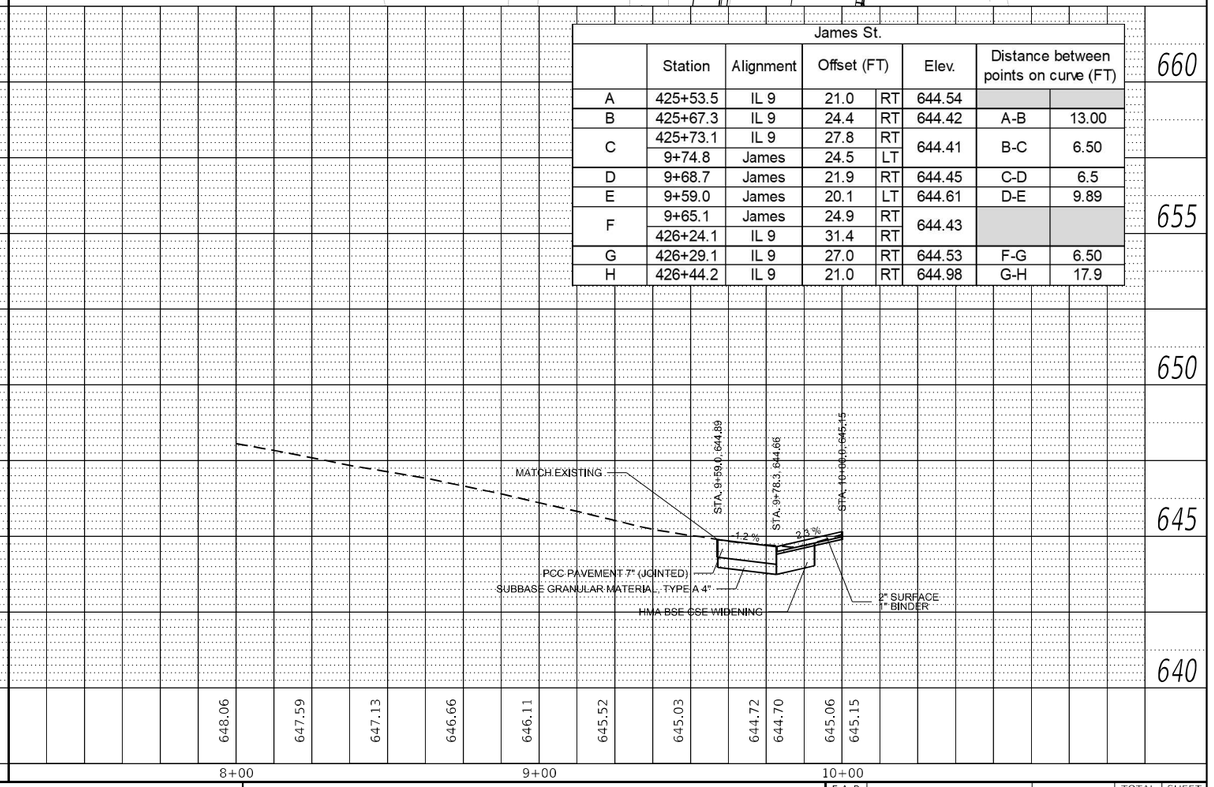

USER NAME = $USER$	DESIGNED -	REVISED -	
	DRAWN -	REVISED -	
PLOT SCALE = 1:50	CHECKED -	REVISED -	
PLOT DATE = 2/14/2025	DATE -	REVISED -	

STATE OF ILLINOIS
DEPARTMENT OF TRANSPORTATION

SIDE ROAD PLAN & PROFILE
SAMPSON ST. & JAMES ST.

SCALE: | SHEET 3 OF 4 SHEETS | STA. | TO STA.

F.A.P. RTE.	SECTION	COUNTY	TOTAL SHEETS	SHEET NO.
693	118RS-8.W-2	TAZEWELL	292	87

CONTRACT NO. 68A65

ILLINOIS | FED. AID PROJECT

PLAN | SURVEYED | PLOTTED | ALIGNMENT CHECKED | R.O.W. CHECKED | CADD FILE NAME | NOTE BOOK NO. | DATE | BY

PROFILE | SURVEYED | PLOTTED | GRADES CHECKED | B.M. NOTED | STRUCTURE NOTATIONS CHKD | NOTE BOOK NO. | DATE | BY

MODEL: Default
FILE NAME: pw:\\ildot-pw.bentley.com:PW\IDOT\Documents\IDOT Offices\District 4\Projects\D1_68A65\CADData\CADsheets\sht-Pvt_Sideroads25.dgn

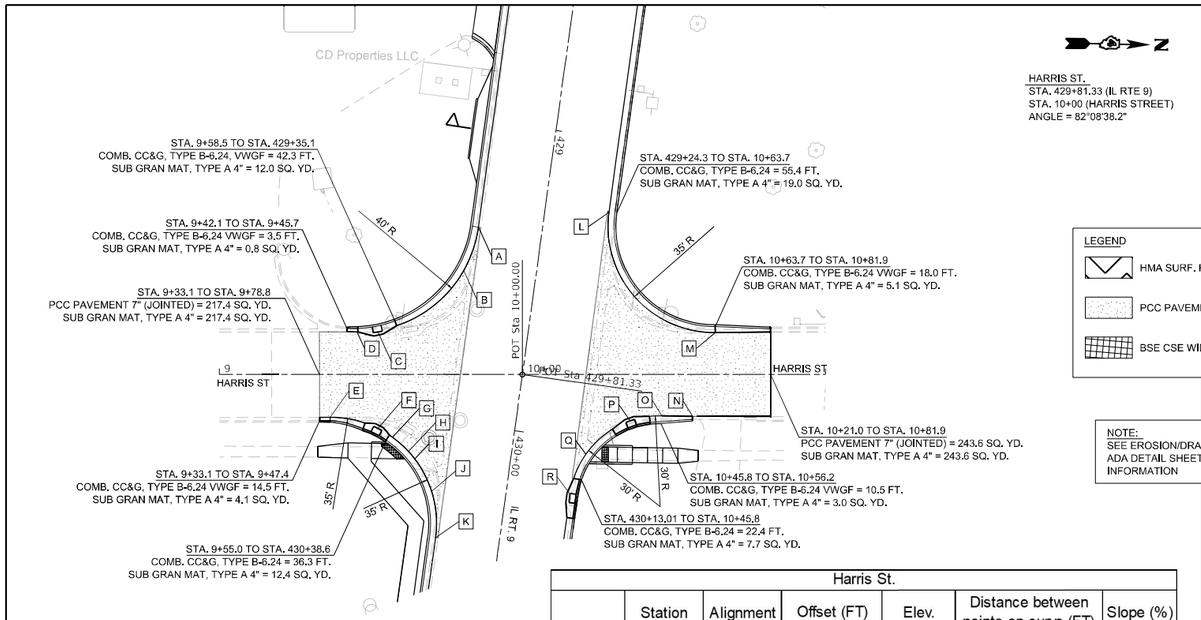

Chestnut St.							
	Station	Alignment	Offset (FT)		Elev.	Distance between points on curve (FT)	
A	434+08.5	IL 9	21.0	RT	647.61		
B	434+23.5	IL 9	23.9	RT	647.56	A-B	15.51
C	9+70.9	Chestnut	15.9	LT	647.47	B-C	14.76

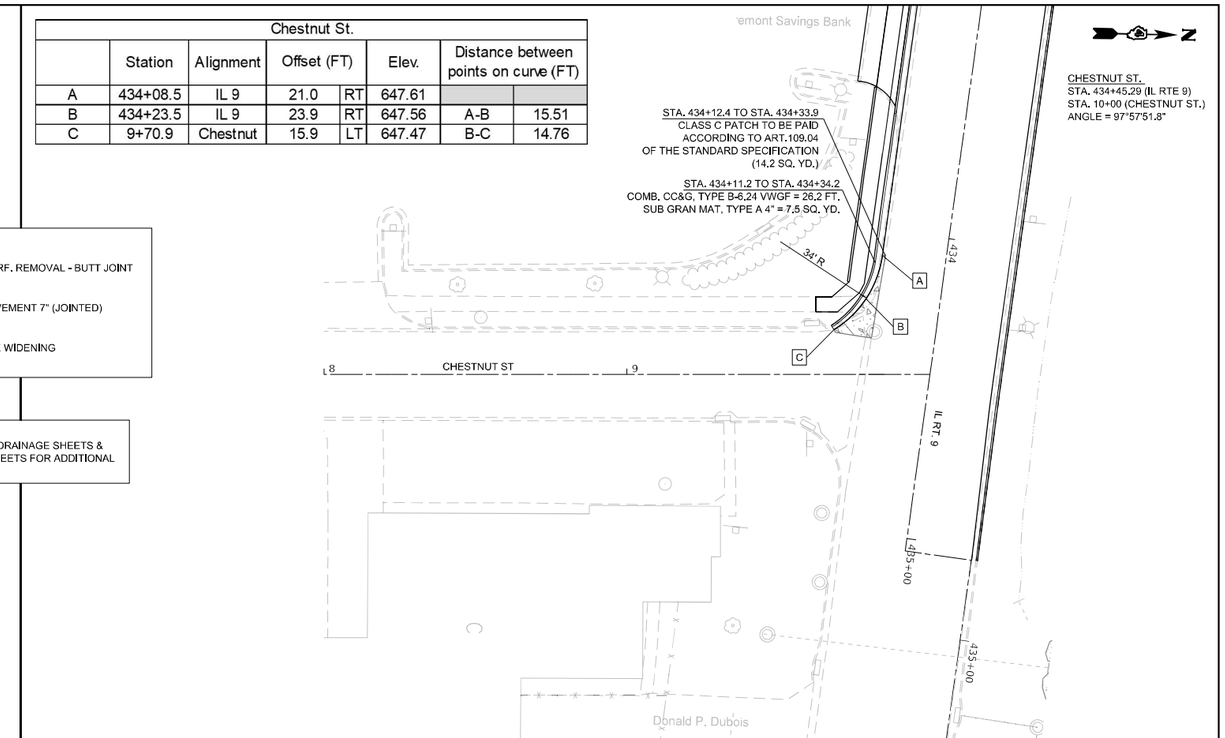

LEGEND

- HMA SURF. REMOVAL - BUTT JOINT
- PCC PAVEMENT 7" (JOINTED)
- BSE CSE WIDENING

NOTE:
SEE EROSION/DRAINAGE SHEETS & ADA DETAIL SHEETS FOR ADDITIONAL INFORMATION

Harris St.								
	Station	Alignment	Offset (FT)		Elev.	Distance between points on curve (FT)		Slope (%)
A	429+35.1	IL 9	21.0	RT	645.85			
B	429+50.0	IL 9	23.9	RT	645.80	A-B	15.22	-0.33
C	9+52.3	Harris St.	14.1	LT	645.20	B-C	35.66	-1.68
	429+73.9	IL 9	49.2	RT				
D	9+45.4	Harris St.	14.1	LT	645.21	C-D	6.91	0.14
E	9+36.6	Harris St.	14.1	RT	645.35			
F	9+52.3	Harris St.	17.7	RT	645.19	E-F	16.30	0.98
	430+05.4	IL 9	44.8	RT				
G	9+59.8	Harris St.	22.8	RT	645.34	F-G	9.11	-1.65
	430+09.4	IL 9	36.7	RT				
H	9+62.4	Harris St.	25.4	RT	645.41	G-H	3.63	-1.93
	430+11.6	IL 9	33.8	RT				
I	9+64.6	Harris St.	27.9	RT	645.47	H-I	3.31	-1.81
	430+13.8	IL 9	31.3	RT				
J	430+23.6	IL 9	24.16	RT	645.99	I-J	12.12	-4.29
K	430+38.6	IL 9	21.00	RT	646.18	J-K	15.50	1.23
L	429+24.3	IL 9	21.0	LT	645.82			
M	10+63.70	Harris St.	13.9	LT	646.56	L-M	60.18	1.23
N	10+56.20	Harris St.	13.80	RT	646.35			
O	10+46.00	Harris St.	13.60	RT	646.18	N-O	10.17	1.67
P	10+35.61	Harris St.	15.30	RT	645.98	O-P	10.61	1.89
Q	430+04.52	IL 9	24.40	LT	646.04	P-Q	18.64	-0.32
R	430+18.30	IL 9	21.00	LT	646.08	Q-R	14.33	-0.28

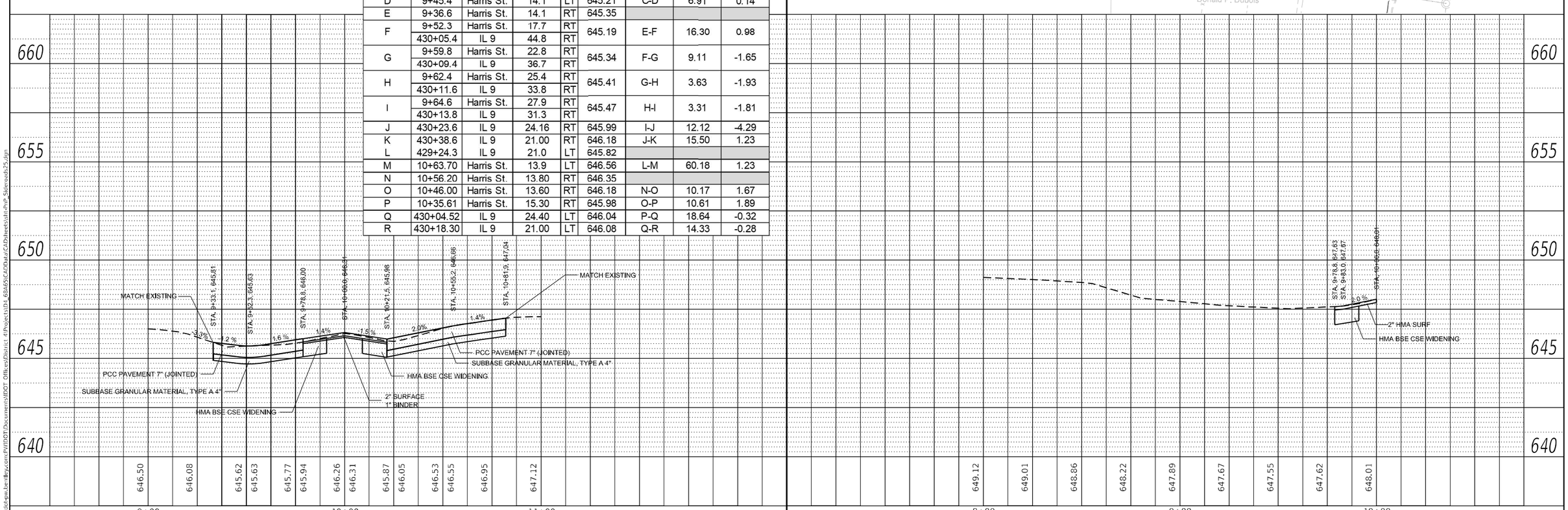

PLAN — SURVEYED / PLOTTED / ALIGNMENT CHECKED / R.O.W. CHECKED / CADD FILE NAME / NOTE BOOK NO. / BY / DATE

PROFILE — SURVEYED / PLOTTED / GRADES CHECKED / B.M. NOTED / STRUCTURE NOTATIONS CHKD / NOTE BOOK NO. / BY / DATE

NODE: Default
FILE NAME: pw:\\ildot-pw.bentley.com:PWIDOT\Documents\IDOT Offices\District 4\Projects\D4_68A65\CADData\CADSheets\sht-hnp_Sideroads25.dgn

USER NAME = $USER$	DESIGNED -	REVISED -	
	DRAWN -	REVISED -	
PLOT SCALE = 1:50	CHECKED -	REVISED -	
PLOT DATE = 2/14/2025	DATE -	REVISED -	

STATE OF ILLINOIS
DEPARTMENT OF TRANSPORTATION

SIDE ROAD PLAN & PROFILE
HARRIS ST. & CHESTNUT ST.

SCALE: | SHEET 4 OF 4 SHEETS | STA. | TO STA.

F.A.P. RTE.	SECTION	COUNTY	TOTAL SHEETS	SHEET NO.
693	118RS-8.W-2	TAZEWELL	292	88
		CONTRACT NO. 68A65		
		ILLINOIS	FED. AID PROJECT	

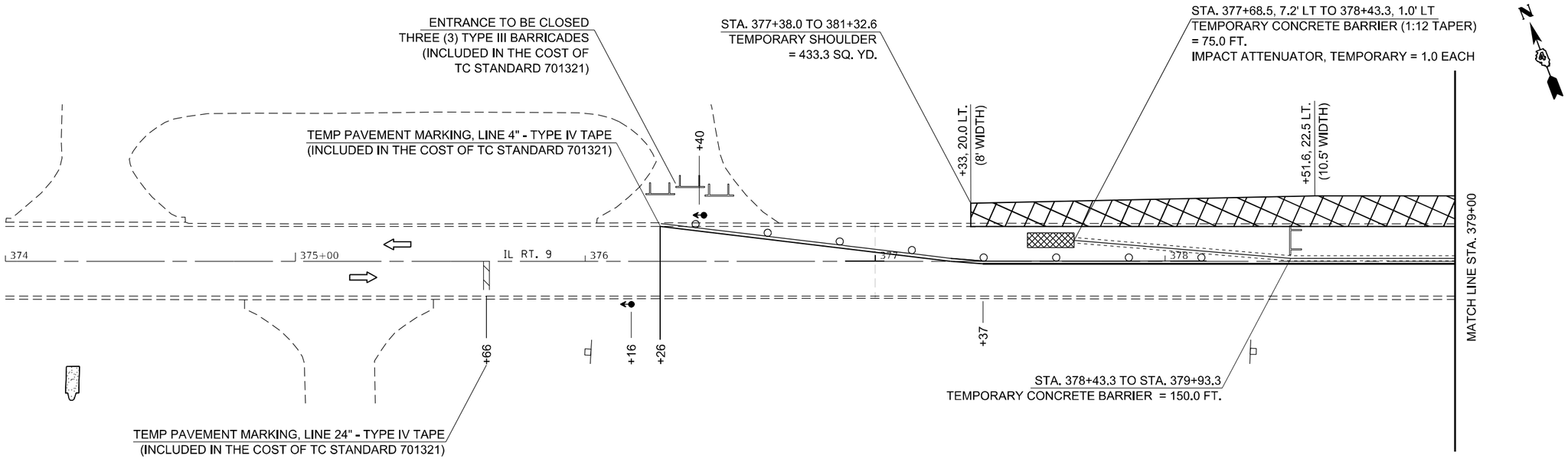

LEGEND

- TRAFFIC SIGNALS
- DRUMS
- TEMPORARY CONCRETE BARRIER
- TYPE III BARRICADE
- TEMPORARY SHOULDER
- TEMPORARY PAVEMENT

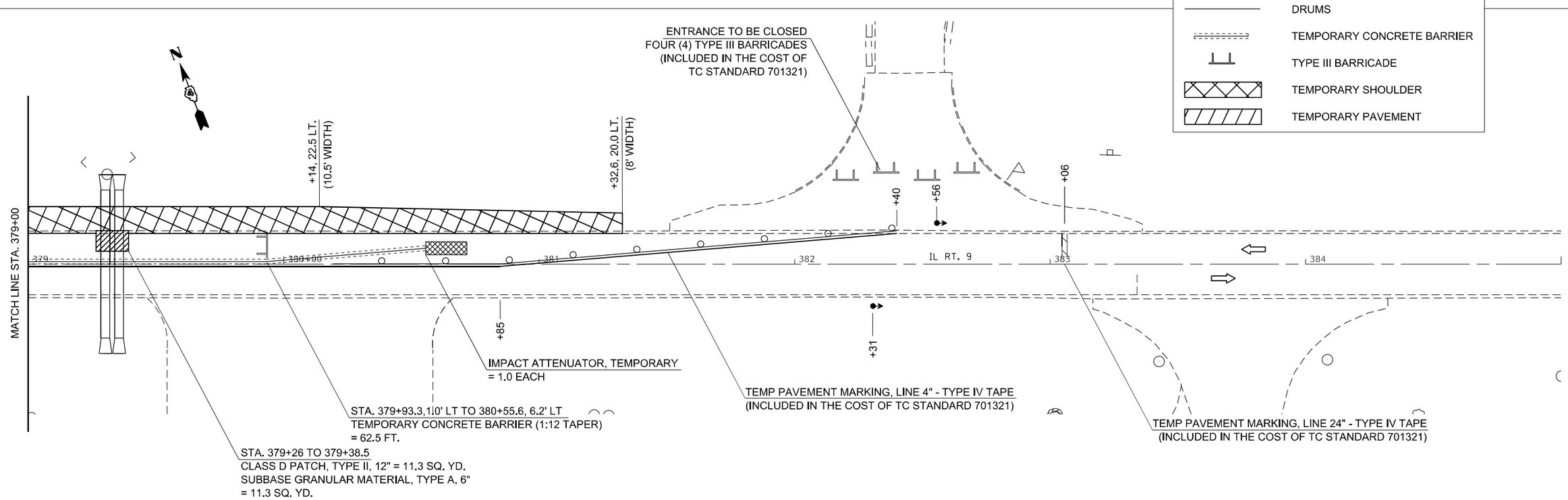

MODEL: Default
FILE NAME: pw:\\ildot-pw.bentley.com:PWIDOT\Documents\IDOT Offices\District 4\Projects\D4_68A65\CADData\CADsheets\D468A65-sht-ProjectStaging_DC.dgn

USER NAME = $USER$	DESIGNED -	REVISED -	
	DRAWN -	REVISED -	
PLOT SCALE = 1:40	CHECKED -	REVISED -	
PLOT DATE = 2/14/2025	DATE -	REVISED -	

STATE OF ILLINOIS
DEPARTMENT OF TRANSPORTATION

STAGE I – DOUBLE ELLIPTICAL
TRAFFIC CONTROL PLAN

SCALE: | SHEET 1 OF 12 SHEETS | STA. TO STA.

F.A.P. RTE.	SECTION	COUNTY	TOTAL SHEETS	SHEET NO.
693	118RS-8.W-2	TAZEWELL	292	89
		CONTRACT NO. 68A65		
	ILLINOIS	FED. AID PROJECT		

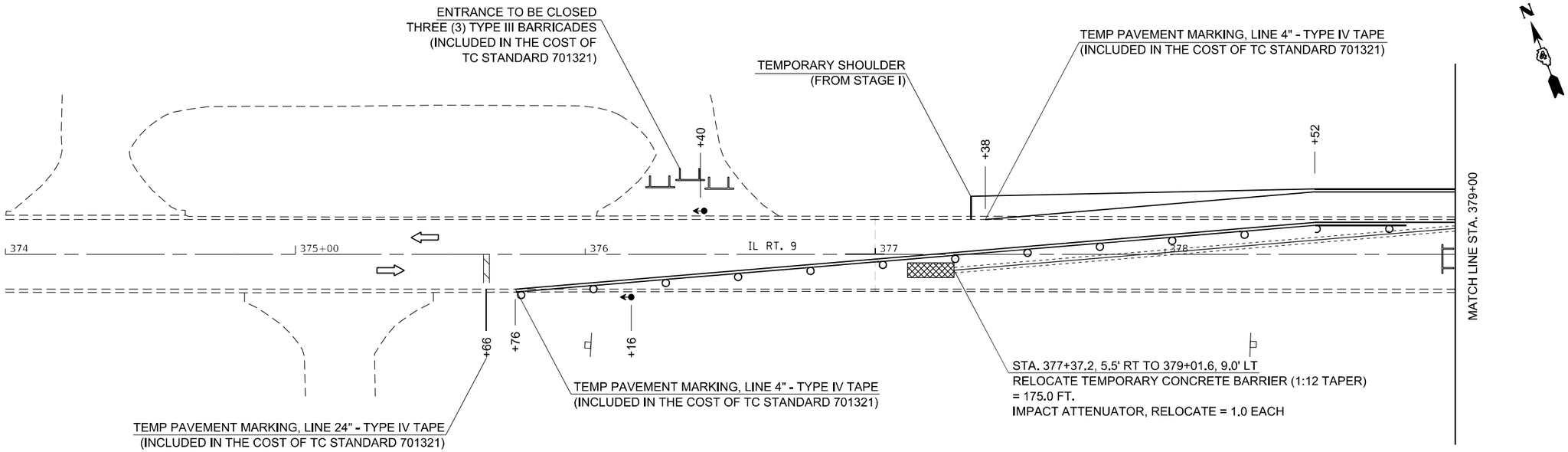

LEGEND

- TRAFFIC SIGNALS
- DRUMS
- TEMPORARY CONCRETE BARRIER
- TYPE III BARRICADE
- TEMPORARY SHOULDER
- TEMPORARY PAVEMENT

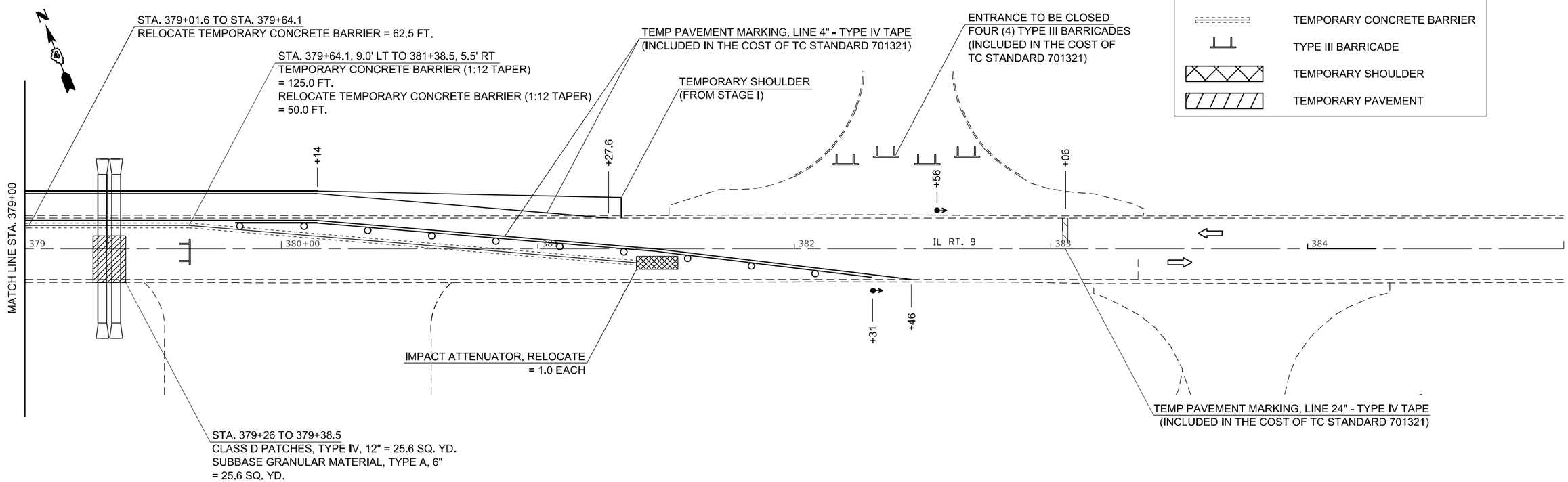

MODEL: Default
FILE NAME: pw:\\ildot-pw.bentley.com:PWIDOT\Documents\IDOT Offices\District 4\Projects\D4 68A65\CADData\CADsheets\D468A65-sht-ProjectStaging_DG.dgn

USER NAME = $USER$	DESIGNED -	REVISED -	
	DRAWN -	REVISED -	
PLOT SCALE = 1:40	CHECKED -	REVISED -	
PLOT DATE = 2/14/2025	DATE -	REVISED -	

STATE OF ILLINOIS
DEPARTMENT OF TRANSPORTATION

STAGE II – DOUBLE ELLIPTICAL
TRAFFIC CONTROL PLAN

SCALE: | SHEET 2 OF 12 SHEETS | STA. TO STA.

F.A.P. RTE.	SECTION	COUNTY	TOTAL SHEETS	SHEET NO.
693	118RS-8,W-2	TAZEWELL	292	90

CONTRACT NO. 68A65

ILLINOIS | FED. AID PROJECT

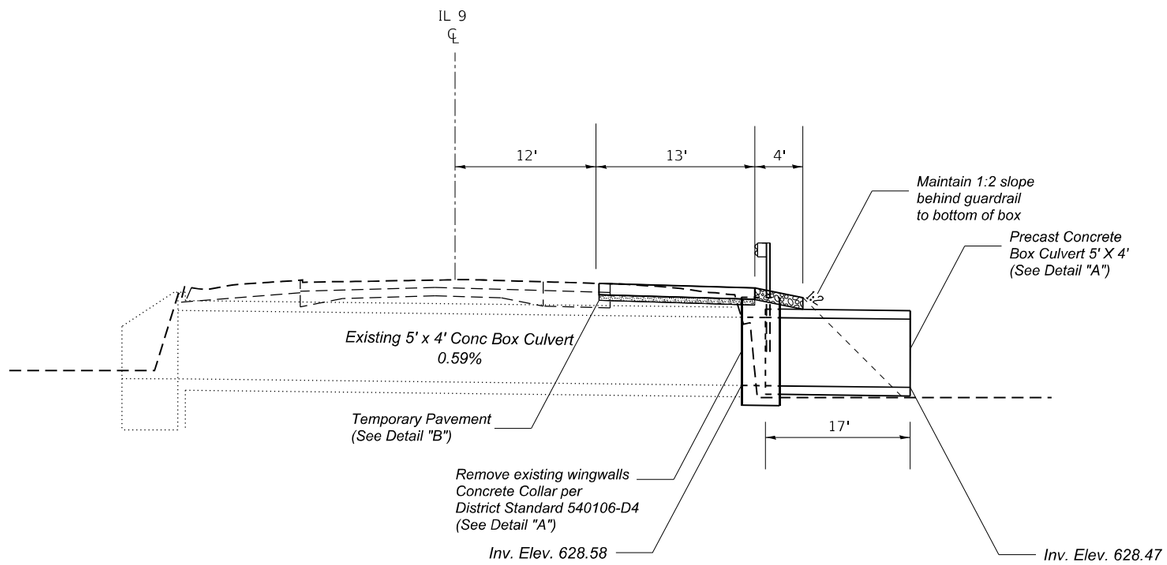

PRE STAGE NOTES:

PRE STAGE SHALL BE COMPLETED USING HIGHWAY STANDARD 701326-04.

1. PRIOR TO PRE-STAGE WORK, THE CONTRACTOR SHALL GPS LOCATE WATER VALVES & METERS WITHIN THE TIBER CREEK STAGING LIMITS IN ADDITION TO THE SANITARY MANHOLE #196B AT STA. 402+81 35.5 RT. A COPY OF LOCATE INFORMATION SHALL BE GIVEN TO THE RESIDENT ENGINEER.

2. REMOVE WINGWALLS AND TEMPORARILY EXTEND EXISTING BOX CULVERT WITH A PRECAST 5' X 4' BOX CULVERT. CONCRETE COLLAR, EXPANSION BOLTS, AND REINFORCEMENT BARS WILL BE PER DISTRICT STANDARD 540106-D4.

3. COMPLETE EARTH EXCAVATION (WIDENING) AND TEMPORARY PAVEMENT. USE SURPLUS MATERIAL TO PLACE EMBANKMENT AT 1:2 SLOPES BEHIND GUARDRAIL EXTENDING TO THE TOE OF BOX CULVERT. OFFSET EAST AND WEST DITCH AS NECESSARY TO MAINTAIN DRAINAGE. TEMPORARY PAVEMENT SHALL BE BACKFILLED WITHIN 3" OF EXISTING PAVEMENT TO AVOID DROP OFF.

4. INSTALL ALL TEMPORARY EROSION AND SEDIMENT CONTROL MEASURES.

5. COMPLETE GUARDRAIL AGGREGATE AND INSTALL TEMPORARY GUARDRAIL AT LOCATIONS NOTED ON THE PLAN SHEETS.

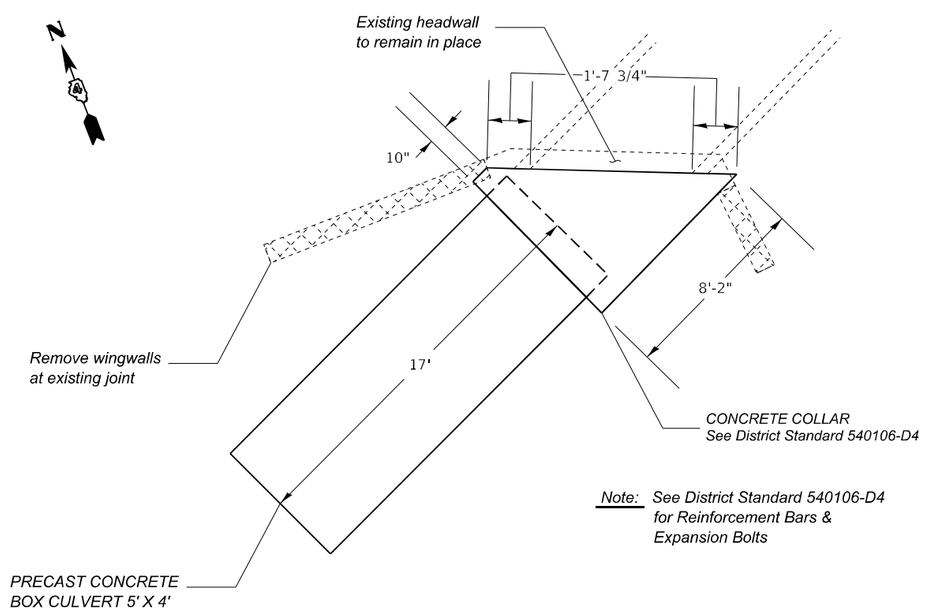

PLAN VIEW

DETAIL "A"

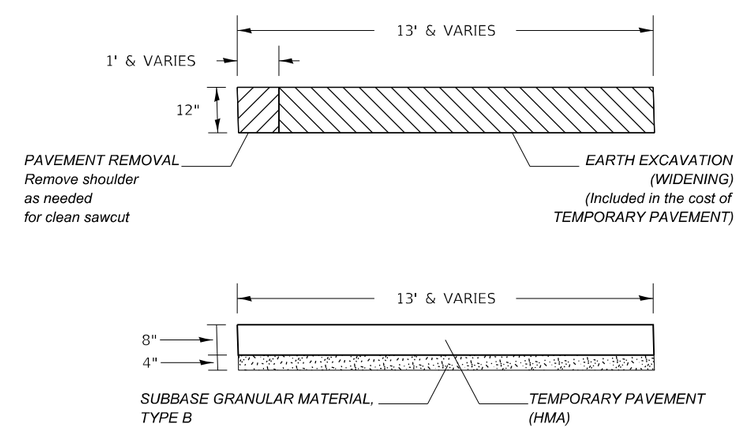

DETAIL "B"

MODEL: Default
FILE NAME: pw:\\ildot-pw.bentley.com:PWIDOT\Documents\IDOT Offices\District 4\Project\D4_68A65\CADData\CADsheets\D468A65-sht-PreStaging_DE.dgn

USER NAME = $USER$	DESIGNED -	REVISED -	
	DRAWN -	REVISED -	
PLOT SCALE = 1:40	CHECKED -	REVISED -	
PLOT DATE = 2/14/2025	DATE -	REVISED -	

STATE OF ILLINOIS
DEPARTMENT OF TRANSPORTATION

PRE-STAGE – TIBER CREEK BOX CULVERT
TRAFFIC TYPICAL SECTION

SCALE: | SHEET 3 OF 12 SHEETS | STA. TO STA.

F.A.P. RTE.	SECTION	COUNTY	TOTAL SHEETS	SHEET NO.
693	118RS-8,W-2	TAZEWELL	292	91
		CONTRACT NO. 68A65		
		ILLINOIS	FED. AID PROJECT	

STA. 396+53 TO 412+12
TEMPORARY PAVEMENT = 1914.3 SQ. YD.
SUBBASE GRANULAR MATERIAL, TYPE B 4" = 1914.3 SQ. YD.
PAVED SHOULDER REMOVAL = 151.3 SQ. YD.
EARTH EXCAVATION (WIDENING) = 329 CU. YD. (SHALL BE INCLUDED IN THE COST OF TEMPORARY PAVEMENT)
(SEE DETAIL "B")

396 397 398 399 IL RT. 9 400+00 401

MATCH LINE STA. 402+00

+53, 20.0 RT.
(8' WIDTH)

+38, 25.0 RT.
(13' WIDTH)

LEGEND

- TRAFFIC SIGNALS
- DRUMS
- TEMPORARY CONCRETE BARRIER
- TYPE III BARRICADE
- TEMPORARY SHOULDER
- TEMPORARY PAVEMENT

STA 401+97 TO 405+9.4
GUARDRAIL AGGREGATE EROSION CONTROL
= 31.6 TONS

STA 402+30.6 TO 402+80.6
TEMPORARY TRAFFIC BARRIER TERMINAL, TYPE 1
= 1.0 EACH

402+80.6 TO 404+30.6
TEMPORARY STEEL PLATE BEAM GUARDRAIL, TYPE A = 150.0 FT.
(POST SPACING SHALL BE ADJUSTED TO MEET FIELD CONDITIONS)

STA 404+30.6 TO 404+80.6
TEMPORARY TRAFFIC BARRIER TERMINAL, TYPE 1
= 1.0 EACH

MATCH LINE STA. 402+00

402 403 404 IL RT. 9 405+00 406 407

MATCH LINE STA. 408+00

SANITARY SEWER #196B

STA. 402+21 TO 405+14
EMBANKMENT = 177 CU. YD. (INCIDENTAL TO TEMPORARY PAVEMENT)
TEMP EROSION CONTROL SEEDING = 10.0 LBS
TEMP EROSION CONTROL BLANKET = 219.9 SQ. YD.

STA. 403+37
CONCRETE COLLAR = 2.7 CU. YD.
PRECAST CONCRETE BOX CULVERT 5' X 4' = 17.0 FT.
(SEE DETAIL "A")

+74, 25.0 RT.
(13' WIDTH)

+74, 22.0 RT.
(10' WIDTH)

+24, 22.0 RT.
(10' WIDTH)

TEMPORARY SHOULDER = 14.5 SQ. YD.
REMOVE INLET, CURB, AND GUTTER AND WIDEN SCHOOL ENTRANCE 4.5 FEET FOR STAGE II

MODEL: Default
FILE NAME: pw:\\ildot-pw.bentley.com:PWIDOT\Documents\IDOT Offices\District 4\Projects\D4_68A65\CADData\CADsheet\D468A65-sht-ProjectStaging_DC.dgn

USER NAME = $USER$	DESIGNED -	REVISED -	
	DRAWN -	REVISED -	
PLOT SCALE = 1:40	CHECKED -	REVISED -	
PLOT DATE = 2/14/2025	DATE -	REVISED -	

STATE OF ILLINOIS
DEPARTMENT OF TRANSPORTATION

PRE-STAGE – TIBER CREEK BOX CULVERT
TRAFFIC CONTROL PLAN

SCALE: SHEET 4 OF 12 SHEETS STA. TO STA.

F.A.P. RTE.	SECTION	COUNTY	TOTAL SHEETS	SHEET NO.
693	118RS-8.W-2	TAZEWELL	292	92
		CONTRACT NO. 68A65		
	ILLINOIS	FED. AID PROJECT		

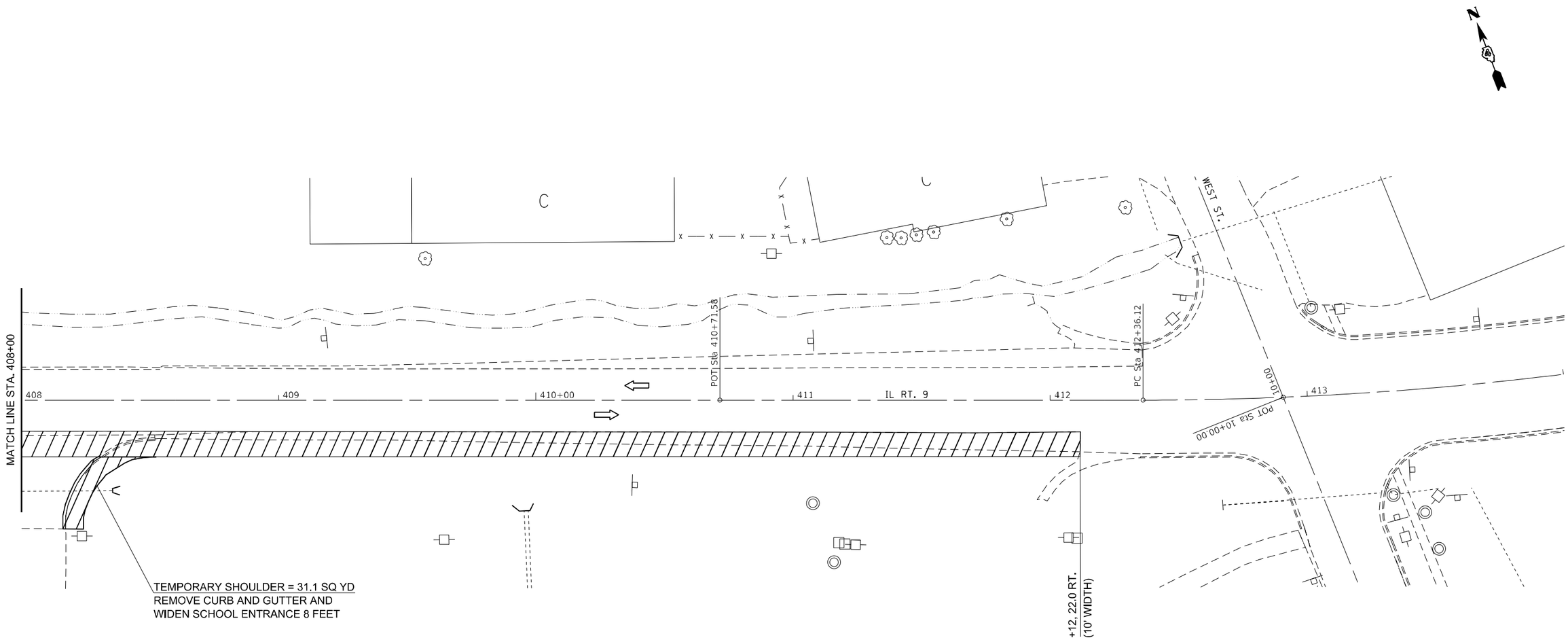

LEGEND

- TRAFFIC SIGNALS
- DRUMS
- TEMPORARY CONCRETE BARRIER
- TYPE III BARRICADE
- TEMPORARY SHOULDER
- TEMPORARY PAVEMENT

MODEL: Default
FILE NAME: pw:\\ildot-pw.bentley.com:PWIDOT\Documents\IDOT Offices\District 4\Projects\D4_68A65\CAD\data\CADsheets\D468A65-sht-PreProjectStaging_05.dgn

USER NAME = $USER$	DESIGNED -	REVISED -	STATE OF ILLINOIS DEPARTMENT OF TRANSPORTATION	PRE-STAGE – TIBER CREEK BOX CULVERT TRAFFIC CONTROL PLAN			F.A.P. RTE.	SECTION	COUNTY	TOTAL SHEETS	SHEET NO.
	DRAWN -	REVISED -					693	118RS-8.W-2	TAZEWELL	292	93
PLOT SCALE = 1:40	CHECKED -	REVISED -							CONTRACT NO. 68A65		
PLOT DATE = 2/14/2025	DATE -	REVISED -		SCALE:	SHEET 5 OF 12 SHEETS	STA. TO STA.		ILLINOIS	FED. AID PROJECT		

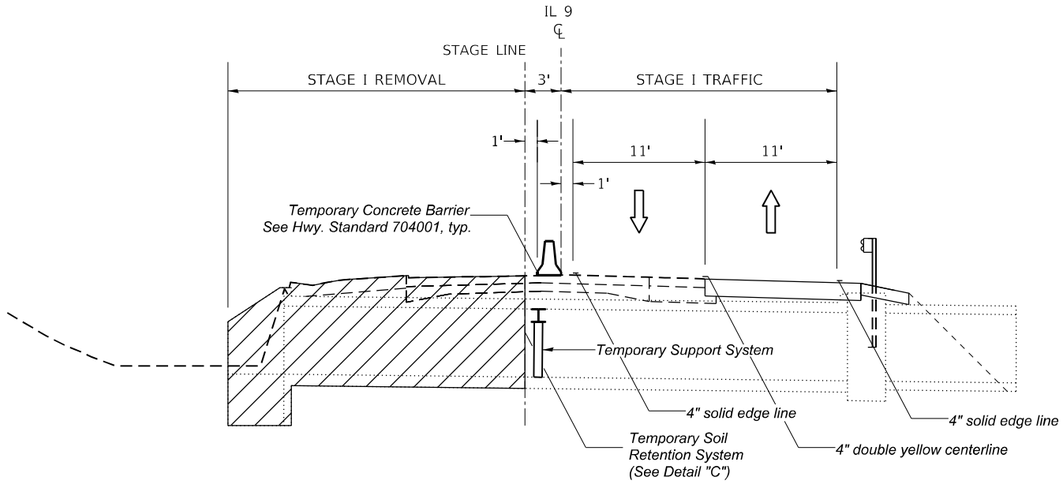

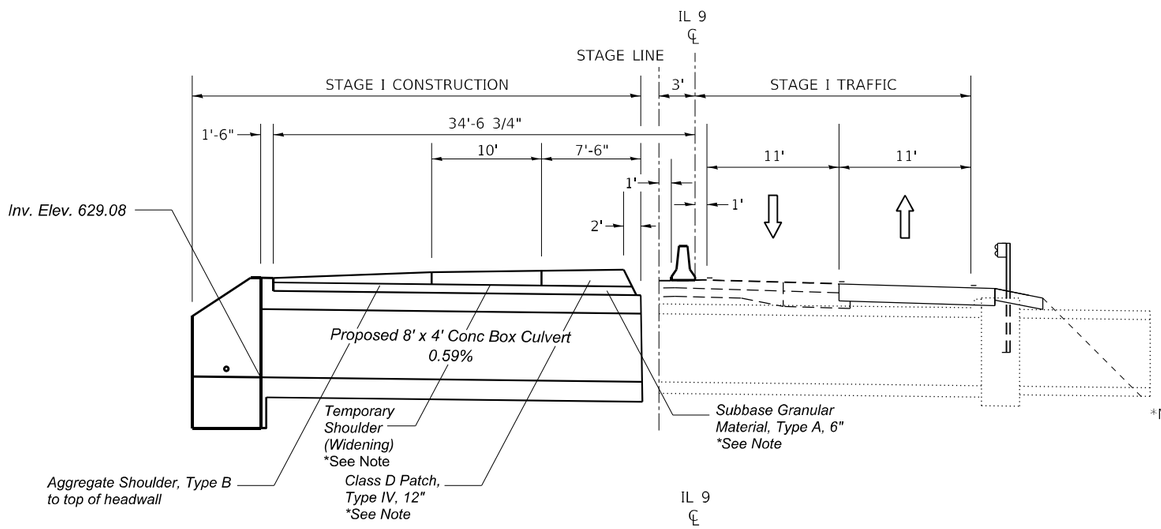

*NOTE: ADD TEMPORARY RAMP TO TRANSITION TO EXISTING ELEVATION IN ORDER TO MAINTAIN 12" CLASS D PATCH AND 6" SUBBASE OVER BOX CULVERT

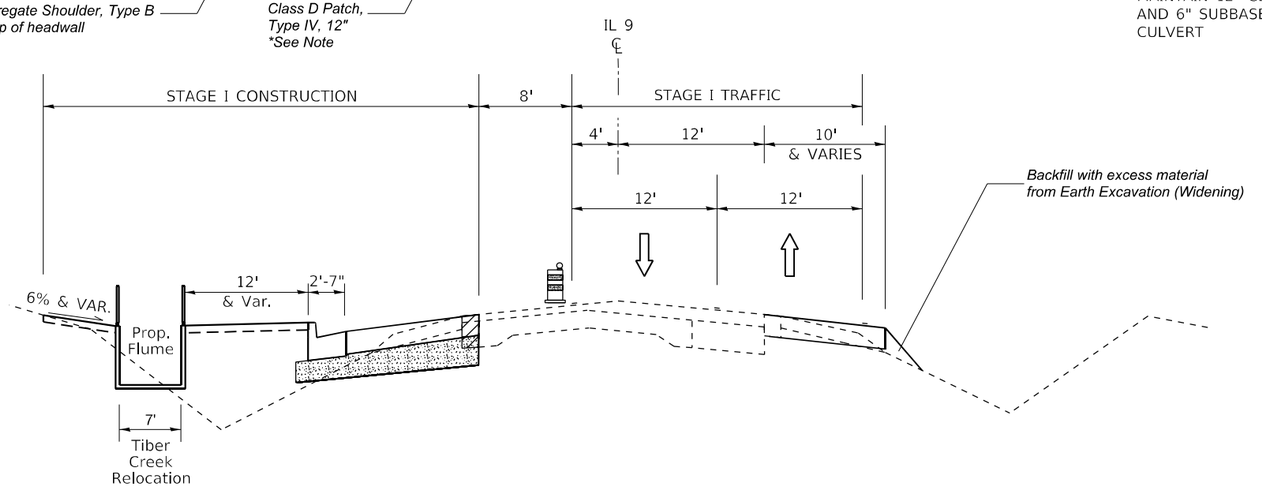

STAGE I NOTES:

STAGE I FOR TIBER CREEK CONSTRUCTION SHALL CONFORM TO DISTRICT 4 CADD STANDARD 701331, SPECIAL (TO BE PAID FOR AS TRAFFIC CONTROL AND PROTECTION, SPECIAL). FLUME CONSTRUCTION SHALL CONFORM TO HIGHWAY TRAFFIC CONTROL STANDARD 701502.

USING TRAFFIC CONTROL STANDARDS REMOVE EXISTING CONFLICTING PERMANENT PAVEMENT MARKINGS

EXISTING OR TEMPORARY PAVEMENT MARKINGS SHALL BE ON BOTH SIDES OF OPEN LANES AND A DOUBLE YELLOW CENTERLINE.

ADVISORY SPEED LIMIT SHALL BE 30 MPH.

MAINTAIN TWO WAY TRAFFIC THROUGHOUT CONSTRUCTION.

CLOSE NORTH LEG OF WEST STREET PER HIGHWAY STANDARD BLR 21-9 AS NECESSARY TO COMPLETE FLUME CONSTRUCTION

TEMPORARY CONCRETE BARRIER SHALL BE PINNED BETWEEN STA. 403+27 AND 404+04 DUE TO DROP OFF. PINNING SHALL BE PAID FOR AS PINNING TEMPORARY CONCRETE BARRIER. PINNING THAT IS REQUIRED ADJACENT TO IMPACT ATTENUATORS WILL NOT BE PAID FOR SEPARATELY, BUT IS INCLUDED IN THE COST OF TEMPORARY CONCRETE BARRIER.

TRAFFIC CONTROL ADJUSTMENTS MAY BE NECESSARY TO ACCOMODATE TRAFFIC FOR TREMONT HIGH SCHOOL. CONSTRUCTION TRAFFIC MAY BE RESTRICTED DURING THE SCHOOL YEAR AT THE BEGINNING AND END OF DAY. THE CONTRACTOR SHALL CONSULT WITH THE RESIDENT ENGINEER IN ORDER TO MAINTAIN TRAFFIC FLOW THROUGHOUT CONSTRUCTION. ANY TRAFFIC CONTROL ADJUSTMENTS NECESSARY SHALL BE CONSIDERED INCLUDED IN THE COST OF THE TRAFFIC CONTROL STANDARD.

CONTACT DISTRICT 4 GEOTECHNICAL ENGINEER TO CONFIRM SOIL STABILITY AFTER REMOVAL OF UNSUITABLE MATERIAL.

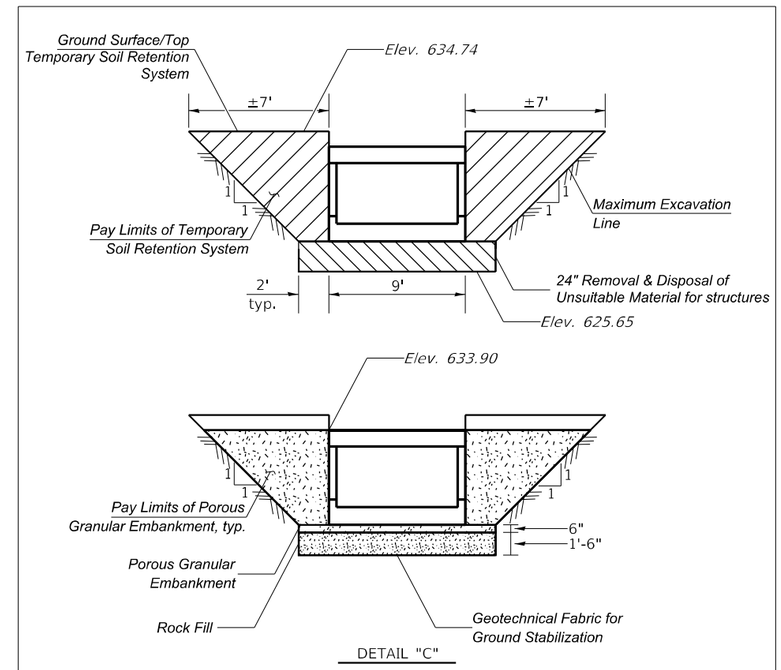

DETAIL "C"

USER NAME = $USER$	DESIGNED -	REVISED -	
	DRAWN -	REVISED -	
PLOT SCALE = 1:40	CHECKED -	REVISED -	
PLOT DATE = 3/31/2025	DATE -	REVISED -	

STATE OF ILLINOIS
DEPARTMENT OF TRANSPORTATION

STAGE I – TIBER CREEK BOX CULVERT
TRAFFIC CONTROL TYPICAL SECTIONS

SCALE: | SHEET 6 OF 12 SHEETS | STA. TO STA.

F.A.P. RTE.	SECTION	COUNTY	TOTAL SHEETS	SHEET NO.
693	118RS-8	TAZEWELL	292	94
		CONTRACT NO. 68A65		
		ILLINOIS	FED. AID PROJECT	

MODEL: Default
FILE NAME: pw:\\ildot-pw.bentley.com:PWIDOT\Documents\IDOT Offices\District 4\Projects\D4_68A65\CADData\CADsheets\D468A65-sht-ProjectStaging_DC.dgn

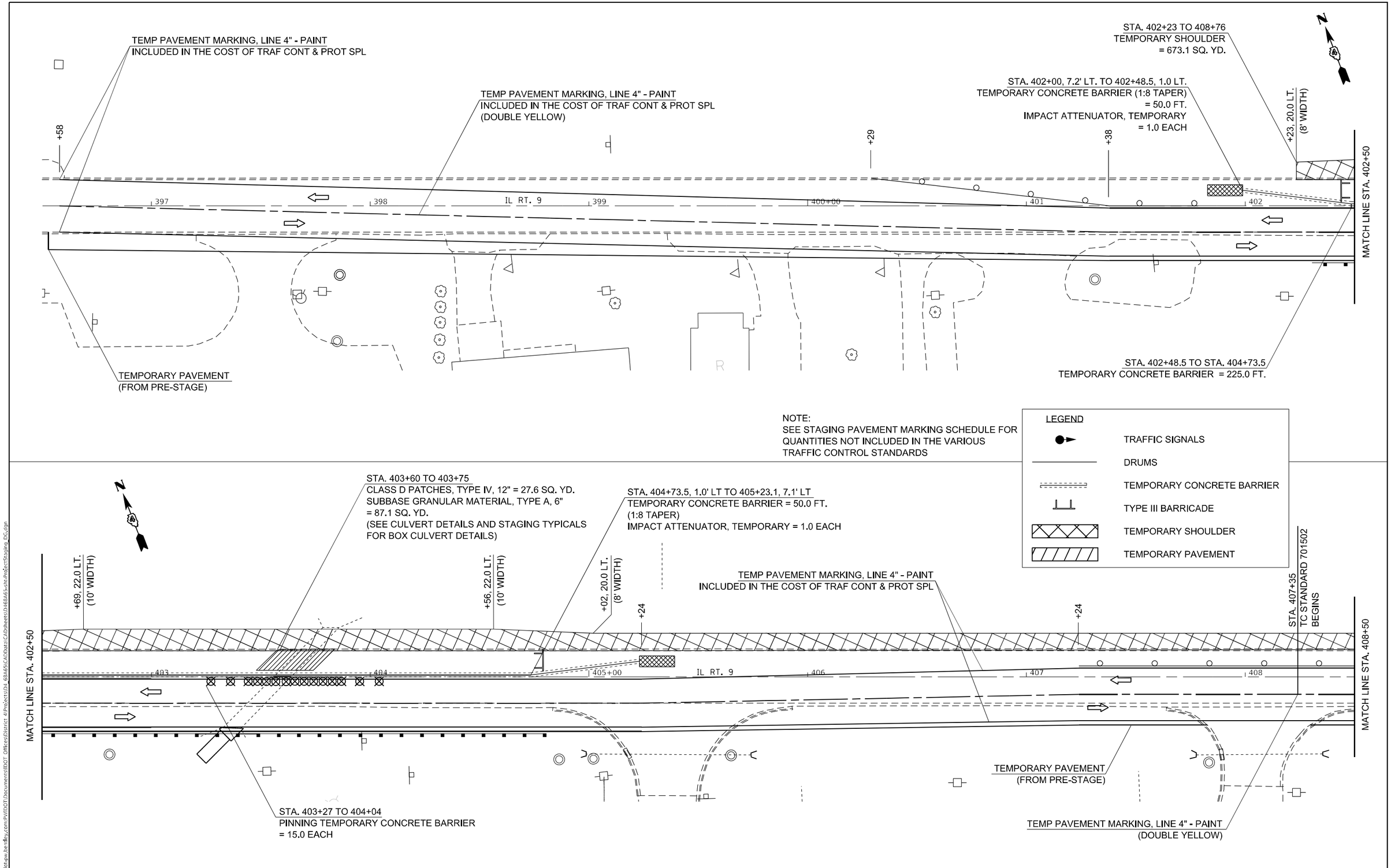

MODEL: Default
FILE NAME: pw:\\ildot-pw.bentley.com:PWIDOT\Documents\IDOT Offices\District 4\Projects\D4_68A65\CADData\CADsheets\D468A65-sht-ProjectStaging_DC.dgn

USER NAME = $USER$	DESIGNED -	REVISED -	
	DRAWN -	REVISED -	
PLOT SCALE = 1:40	CHECKED -	REVISED -	
PLOT DATE = 2/14/2025	DATE -	REVISED -	

STATE OF ILLINOIS
DEPARTMENT OF TRANSPORTATION

STAGE I – TIBER CREEK BOX CULVERT
TRAFFIC CONTROL PLAN

SCALE: | SHEET 7 OF 12 SHEETS | STA. TO STA.

F.A.P. RTE.	SECTION	COUNTY	TOTAL SHEETS	SHEET NO.
693	118RS-8.W-2	TAZEWELL	292	95
		CONTRACT NO. 68A65		
	ILLINOIS	FED. AID PROJECT		

STA. 408+60
BEGIN PROPOSED FLUME WORK AREA
(SEE PROPOSED FLUME SHEET AND
STAGE I TYPICAL FOR DETAILS)

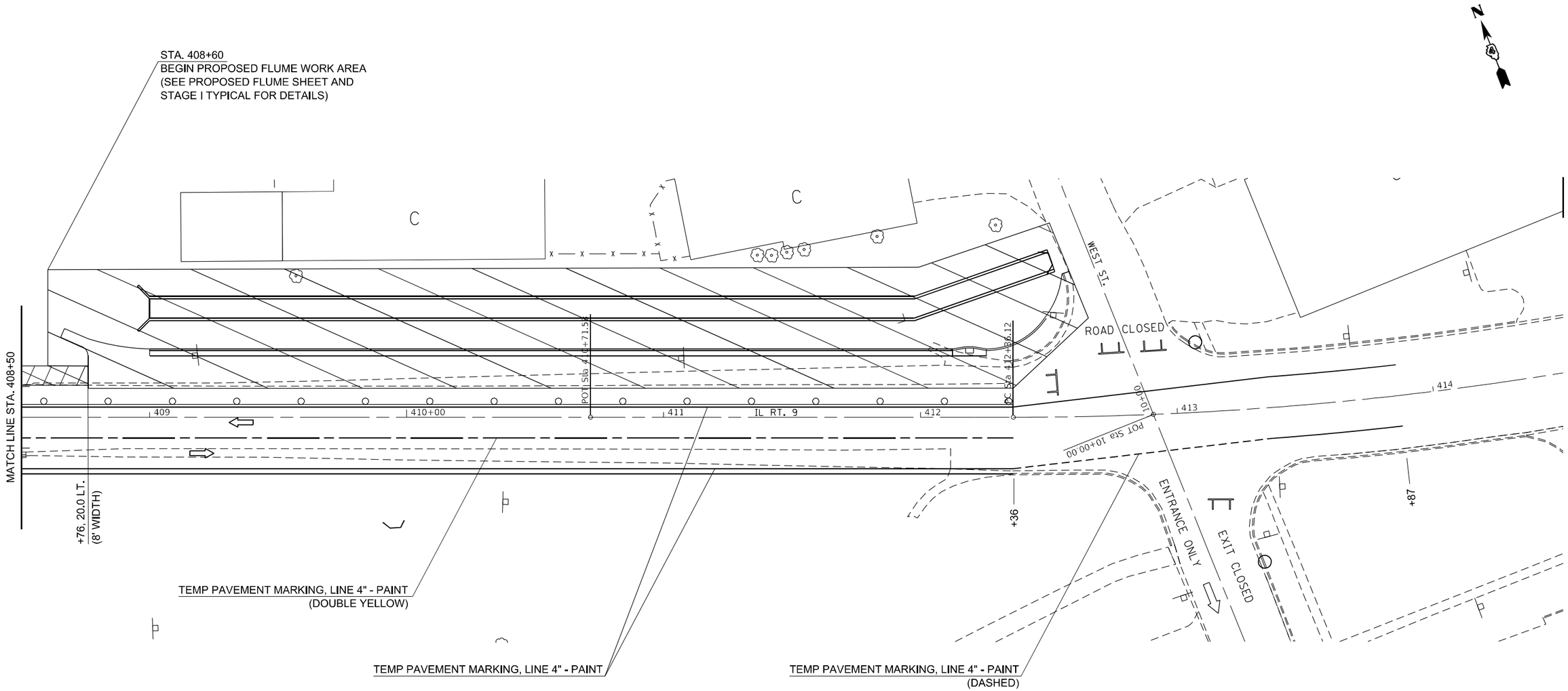

LEGEND

- TRAFFIC SIGNALS
- DRUMS
- TEMPORARY CONCRETE BARRIER
- TYPE III BARRICADE
- TEMPORARY SHOULDER
- TEMPORARY PAVEMENT

NOTE:
SEE STAGING PAVEMENT MARKING SCHEDULE FOR QUANTITIES NOT INCLUDED IN THE VARIOUS TRAFFIC CONTROL STANDARDS

MODEL: Default
FILE NAME: pw:\\ildot-pw.bentley.com:PWIDOT\Documents\IDOT Offices\District 4\Projects\D4_68A65\CADData\CADsheets\D468A65-sht-ProjectStaging_D6.dgn

USER NAME = $USER$	DESIGNED -	REVISED -	
	DRAWN -	REVISED -	
PLOT SCALE = 1:40	CHECKED -	REVISED -	
PLOT DATE = 2/14/2025	DATE -	REVISED -	

STATE OF ILLINOIS
DEPARTMENT OF TRANSPORTATION

STAGE I – TIBER CREEK BOX CULVERT
TRAFFIC CONTROL PLAN

SCALE: | SHEET 8 OF 12 SHEETS | STA. TO STA.

F.A.P. RTE.	SECTION	COUNTY	TOTAL SHEETS	SHEET NO.
693	118RS-8.W-2	TAZEWELL	292	96
		CONTRACT NO. 68A65		
	ILLINOIS	FED. AID PROJECT		

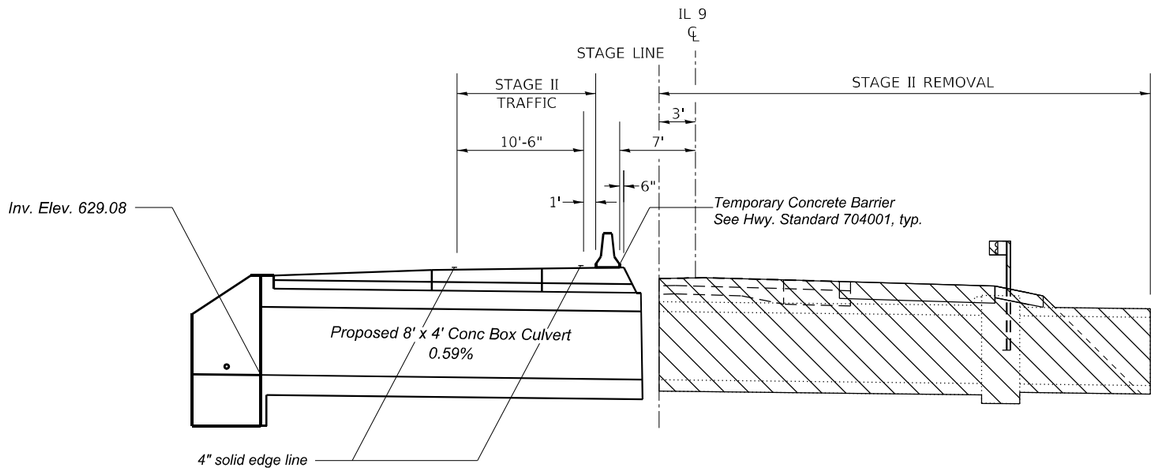

STAGE II NOTES:

STAGE II SHALL CONFORM TO HIGHWAY TRAFFIC CONTROL STANDARD 701321.

REMOVE EXISTING CONFLICTING PAVEMENT MARKINGS

ADVISORY SPEED LIMIT SHALL BE 30 MPH.

THE WEST ENTRANCE TO TREMONT HIGH SCHOOL SHALL BE CLOSED.

TEMPORARY RUMBLE STRIPS FROM STANDARD 701321 ARE ONLY NEEDED FOR WEST SIDE OF TRAFFIC CONTROL.

TEMPORARY CONCRETE BARRIER SHALL BE PINNED BETWEEN STA. 403+28 AND 404+05 DUE TO DROP OFF. PINNING SHALL BE PAID FOR AS PINNING TEMPORARY CONCRETE BARRIER. PINNING THAT IS REQUIRED ADJACENT TO IMPACT ATTENUATORS WILL NOT BE PAID FOR SEPARATELY, BUT IS INCLUDED IN THE COST OF TEMPORARY CONCRETE BARRIER.

TEMPORARY GUARDRAIL AND BOX CULVERT EXTENSION CAN BE REMOVED WHEN STAGE I IS COMPLETE.

TRAFFIC CONTROL ADJUSTMENTS MAY BE NECESSARY TO ACCOMODATE TRAFFIC FOR TREMONT HIGH SCHOOL. CONSTRUCTION TRAFFIC MAY BE RESTRICTED DURING THE SCHOOL YEAR AT THE BEGINNING AND END OF DAY. THE CONTRACTOR SHALL CONSULT WITH THE RESIDENT ENGINEER IN ORDER TO MAINTAIN TRAFFIC FLOW THROUGHOUT CONSTRUCTION. ANY TRAFFIC CONTROL ADJUSTMENTS NECESSARY SHALL BE CONSIDERED INCLUDED IN THE COST OF THE TRAFFIC CONTROL STANDARD.

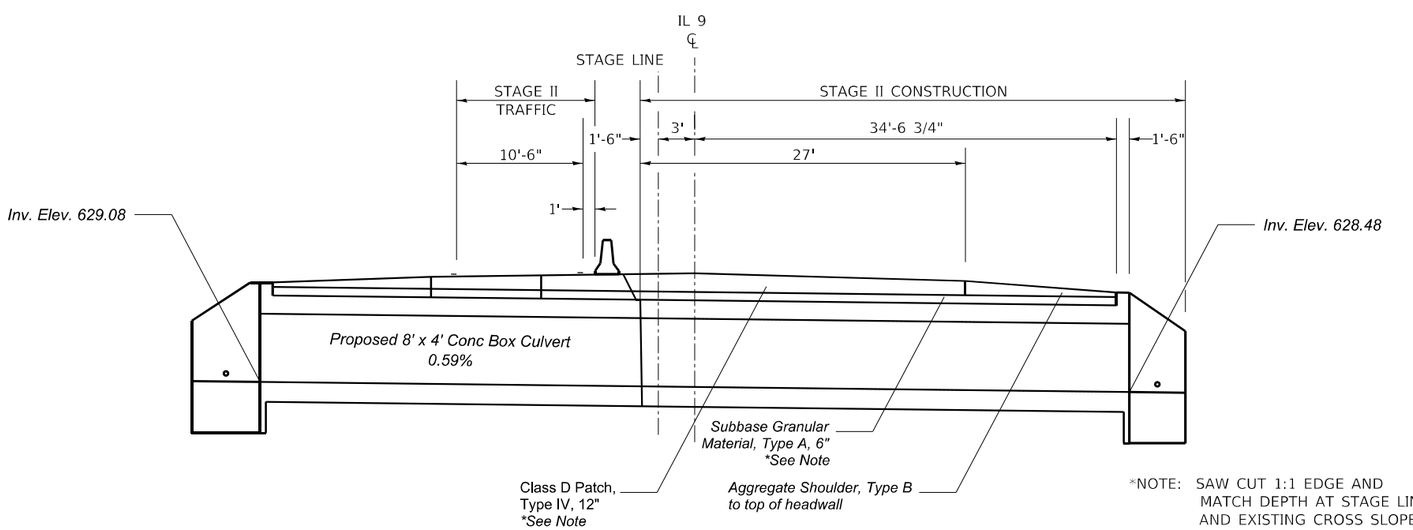

*NOTE: SAW CUT 1:1 EDGE AND MATCH DEPTH AT STAGE LINE AND EXISTING CROSS SLOPE ADD TEMPORARY RAMP AS NEEDED

MODEL: Default
FILE NAME: pw:\\ildot-pw.bentley.com:PWIDOT\Documents\IDOT Offices\District 4\Projects\D4 68A65\CADData\CADsheets\D468A65-Int-Project Staging_DG.dgn

USER NAME = $USER$	DESIGNED -	REVISED -	
	DRAWN -	REVISED -	
PLOT SCALE = 1:40	CHECKED -	REVISED -	
PLOT DATE = 2/14/2025	DATE -	REVISED -	

STATE OF ILLINOIS
DEPARTMENT OF TRANSPORTATION

STAGE II – TIBER CREEK BOX CULVERT
TRAFFIC CONTROL TYPICAL SECTIONS

SCALE: | SHEET 9 OF 12 SHEETS | STA. TO STA.

F.A.P. RTE.	SECTION	COUNTY	TOTAL SHEETS	SHEET NO.
693	118RS-8	TAZEWELL	292	97

CONTRACT NO. 68A65

ILLINOIS | FED. AID PROJECT

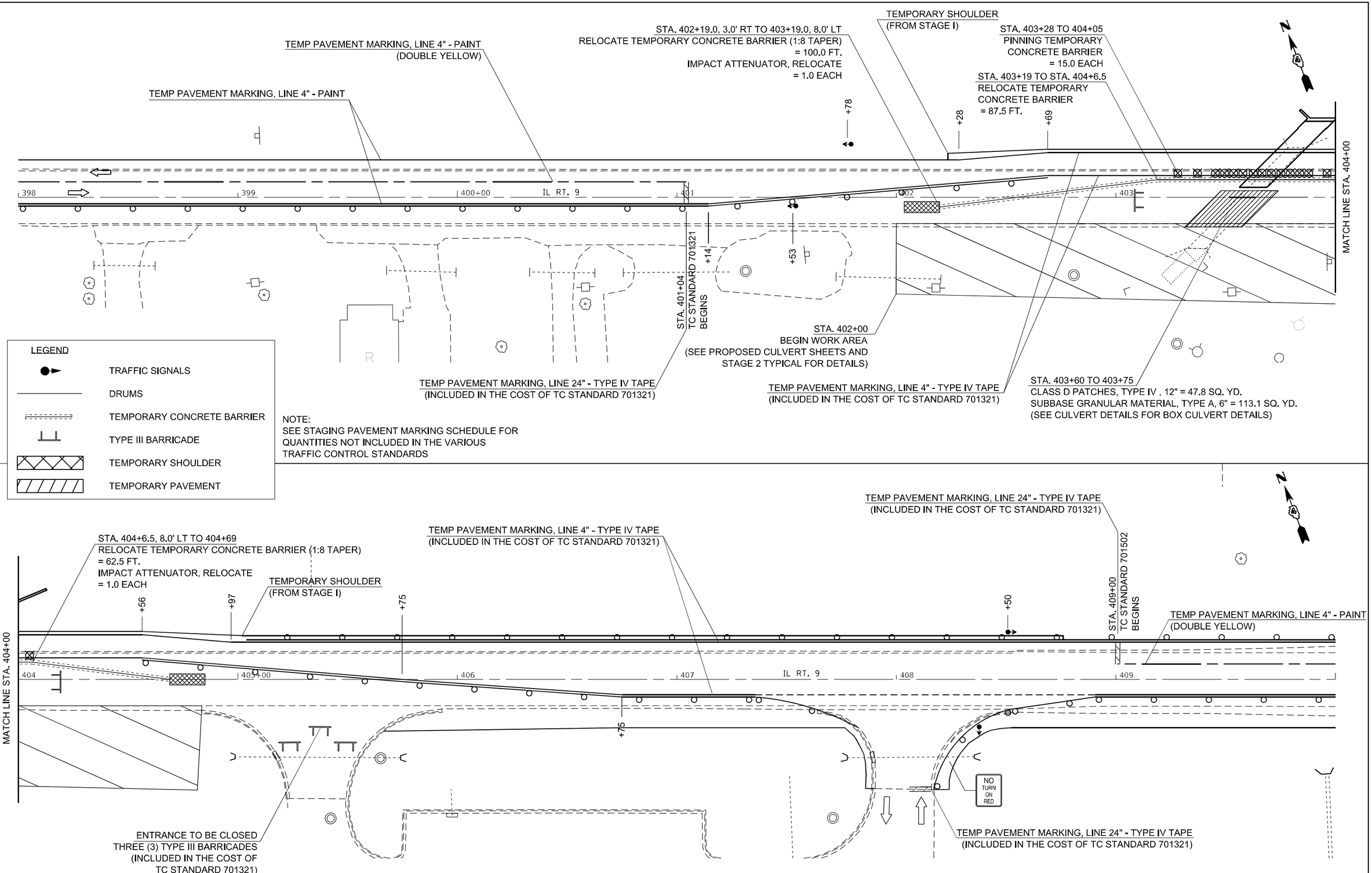

MODEL: Default
FILE NAME: pw:\\ildot-pw.bentley.com:PWIDOT\Documents\IDOT Offices\District 4\Projects\D4 68A65\CADData\CADsheets\D468A65-Sht-Project Staging_DIC.dgn

USER NAME = $USER$	DESIGNED -	REVISED -	
	DRAWN -	REVISED -	
PLOT SCALE = 1:40	CHECKED -	REVISED -	
PLOT DATE = 3/13/2025	DATE -	REVISED -	

STATE OF ILLINOIS
DEPARTMENT OF TRANSPORTATION

STAGE II – TIBER CREEK BOX CULVERT
TRAFFIC CONTROL PLAN

SCALE: | SHEET 10 OF 12 SHEETS | STA. TO STA.

F.A.P. RTE.	SECTION	COUNTY	TOTAL SHEETS	SHEET NO.
693	118RS-8.W-2	TAZEWELL	292	98
		CONTRACT NO. 68A65		
	ILLINOIS	FED. AID PROJECT		

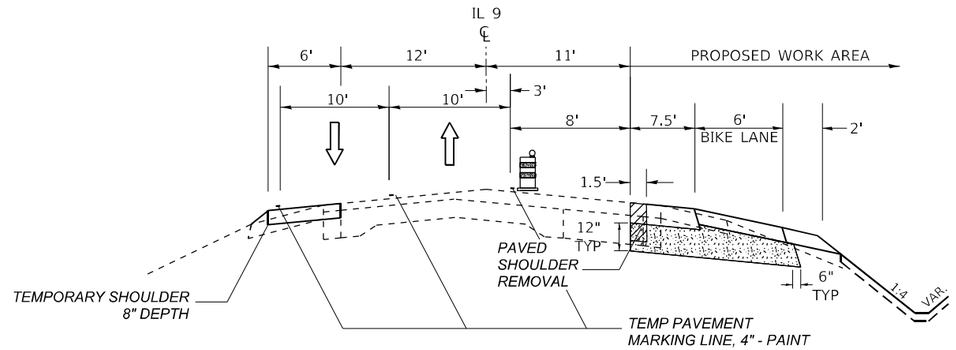

STAGE I NOTES:

COMPLETE TEMPORARY SHOULDER ON NORTH SIDE PER HIGHWAY TRAFFIC CONTROL STANDARD 701326 AND REMOVE EXISTING CONFLICTING PAVEMENT MARKINGS.

TEMPORARY PAVEMENT MARKINGS SHALL BE ON BOTH SIDES OF THE OPEN LANES WITH A DOUBLE YELLOW CENTERLINE.

CLOSE THE EASTBOUND SHOULDER AND
SHIFT TRAFFIC TO THE NORTH PER HIGHWAY TRAFFIC CONTROL STANDARD 701502.
MAINTAIN 8' WIDTH FROM AGGREGATE SUBGRADE IMPROVEMENT TO TRAVELED WAY.
REGULATORY SPEED LIMIT SHALL BE 30 MPH.
MAINTAIN TWO WAY TRAFFIC THROUGHOUT CONSTRUCTION.

REMOVE 1.5' INTO EXISTING PAVEMENT AND CONSTRUCT AGGREGATE SUBGRADE IMPROVEMENT AND HMA BASE COURSE. MATCH BASE COURSE INTO EXISTING SURFACE.

INSTALL TEMPORARY PAVEMENT MARKINGS (PAINT) ON BOTH SIDES OF WITH A DOUBLE YELLOW CENTERLINE FOR STAGE II TRAFFIC.

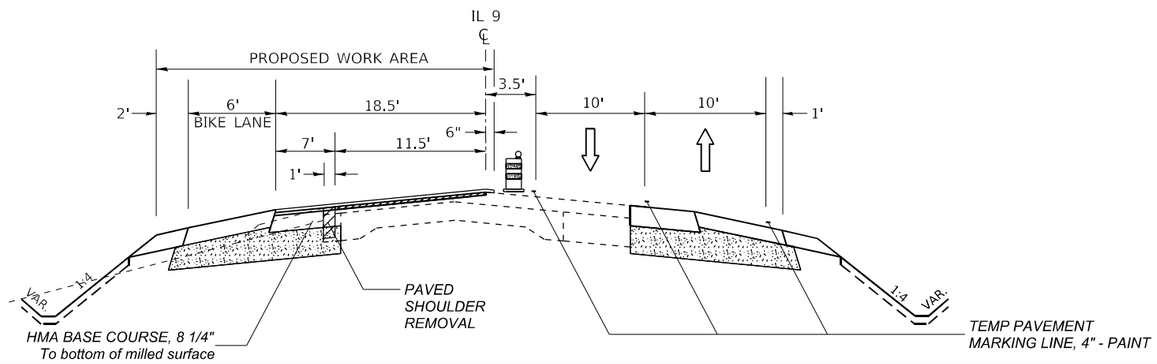

STAGE II NOTES:

CLOSE THE WESTBOUND LANE AND
SHIFT TRAFFIC TO THE SOUTH PER HIGHWAY TRAFFIC CONTROL STANDARD 701502.
REGULATORY SPEED LIMIT SHALL BE 30 MPH.
MAINTAIN TWO WAY TRAFFIC THROUGHOUT CONSTRUCTION.

REMOVE 1' INTO THE EXISTING PAVEMENT AND CONSTRUCT AGGREGATE SUBGRADE IMPROVEMENT AND HMA BASE COURSE. MATCH BASE COURSE TO THE BOTTOM OF THE MILLED SURFACE.

COMPLETE ALL WORK IN WESTBOUND LANE WITH SURFACE EXTENDING 6" INTO THE EASTBOUND LANE.

INSTALL SHORT TERM PAVEMENT MARKINGS ON FINAL SURFACE FOR STAGE III TRAFFIC.

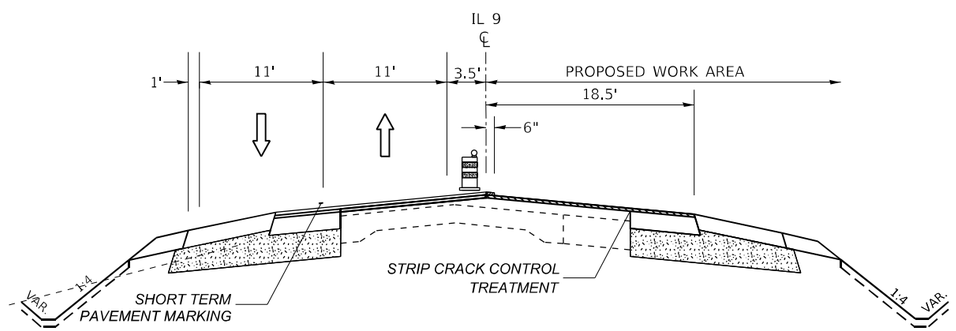

STAGE III NOTES:

CLOSE THE EASTBOUND LANE AND
SHIFT TRAFFIC TO THE NORTH PER HIGHWAY TRAFFIC CONTROL STANDARD 701502.
REGULATORY SPEED LIMIT SHALL BE 30 MPH.
MAINTAIN TWO WAY TRAFFIC THROUGHOUT CONSTRUCTION.

MILL SURFACE, INCLUDING 6" OVERAGE, FROM CENTERLINE TO EDGE OF SHOULDER.
THE REMOVAL OF 6" SURFACE AT CENTERLINE SHALL BE INCLUDED IN THE COST OF HMA SURFACE REMOVAL, 1 1/4".

-PLACE STRIP REFLECTIVE CRACK CONTROL TREATMENT ON SOUTH SIDE ONLY.

-PLACE BINDER AND SURFACE TO EDGE OF SHOULDER.

-PLACE FINAL SURFACE ON SHOULDER.

-PLACE FINAL AGGREGATE SHOULDER TO MATCH HMA SHOULDER.

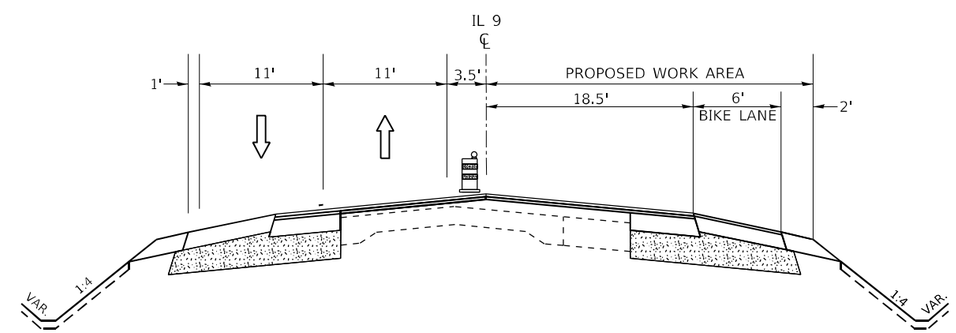

MODEL: Default
FILE NAME: pw:\\ildot-pw.bentley.com:PWIDOT\Documents\IDOT Offices\District 4\Projects\D4_68A65\CADData\CADsheets\D468A65-Int-Project Staging_DG.dgn

USER NAME = $USER$	DESIGNED -	REVISED -	
	DRAWN -	REVISED -	
PLOT SCALE = 1:40	CHECKED -	REVISED -	
PLOT DATE = 2/14/2025	DATE -	REVISED -	

STATE OF ILLINOIS
DEPARTMENT OF TRANSPORTATION

MAINTAIN
TRAFFIC CONTROL

SCALE: | SHEET 11 OF 12 SHEETS | STA. | TO STA.

F.A.P. RTE.	SECTION	COUNTY	TOTAL SHEETS	SHEET NO.
693	118RS-8,W-2	TAZEWELL	292	99

CONTRACT NO. 68A65

ILLINOIS | FED. AID PROJECT

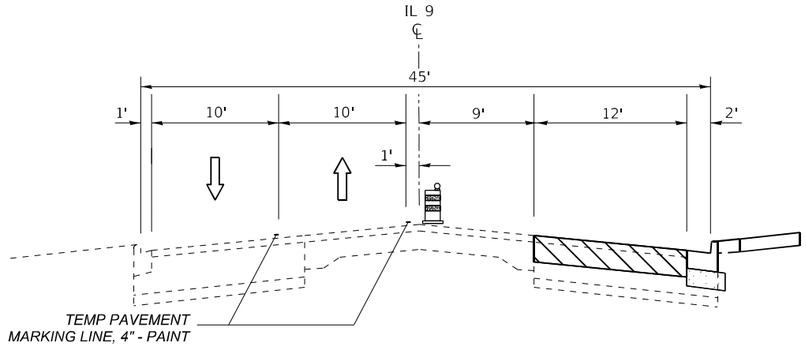

STAGE I NOTES:

CLOSE THE EASTBOUND LANE PER HIGHWAY TRAFFIC CONTROL STANDARD 701502.
REGULATORY SPEED LIMIT SHALL BE 25 MPH.
MAINTAIN TWO WAY TRAFFIC THROUGHOUT CONSTRUCTION.

REMOVE EXISTING CONFLICTING PAVEMENT MARKINGS.

TEMPORARY PAVEMENT MARKINGS SHALL BE NEXT TO THE WORK AREA
AND A DOUBLE YELLOW CENTERLINE.

COMPLETE HMA BASE COURSE AND CURB.
MATCH BASE COURSE TO THE CURB.

INSTALL TEMPORARY PAVEMENT MARKING LINE, 4" PAINT FOR STAGE II.

BUILD UP TO TOP LIFT OF BINDER THROUGH PROFILE ADJUSTMENT SECTION FROM
STA. 424+24 TO STA. 430+14. MATCH INTO PROPOSED CURB ELEVATION.

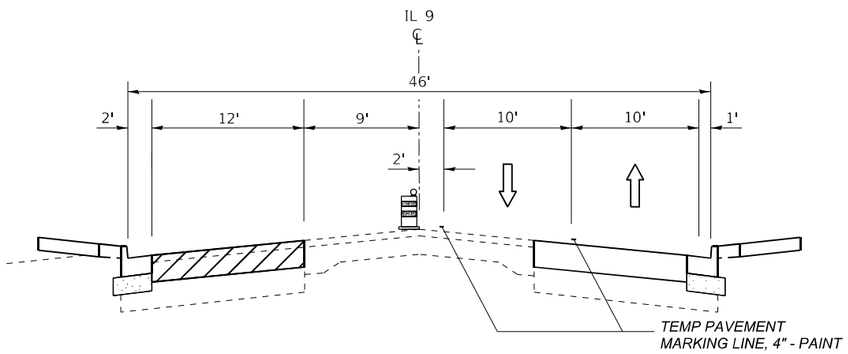

STAGE II NOTES:

CLOSE THE WESTBOUND LANE PER HIGHWAY TRAFFIC CONTROL STANDARD 701502.
REGULATORY SPEED LIMIT SHALL BE 25 MPH.
MAINTAIN TWO WAY TRAFFIC THROUGHOUT CONSTRUCTION.

TEMPORARY PAVEMENT MARKINGS SHALL BE NEXT TO THE WORK AREA
AND A DOUBLE YELLOW CENTERLINE.

COMPLETE HMA BASE COURSE AND CURB, MATCHING INTO THE PROPOSED ELEVATION
OF THE CURB.

REMOVE SURFACE EXTENDING FROM CENTERLINE TO CURB. COMPLETE ADDITIONAL REMOVAL
AND BINDER BUILD UP IN PROFIILE ADJUSTMENT AREA FROM STATION 424+24 TO STA 430+14.

MAINTAIN CONTINUOUS PAVING WITH SURFACE. WHEN SURFACE IS ABOVE EXISTING PROFILE,
PAVE 6" INTO THE EASTBOUND LANE.

INSTALL SHORT TERM PAVEMENT MARKINGS FOR STAGE III.

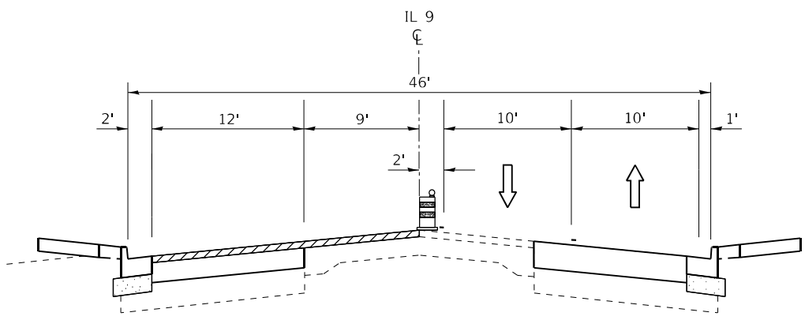

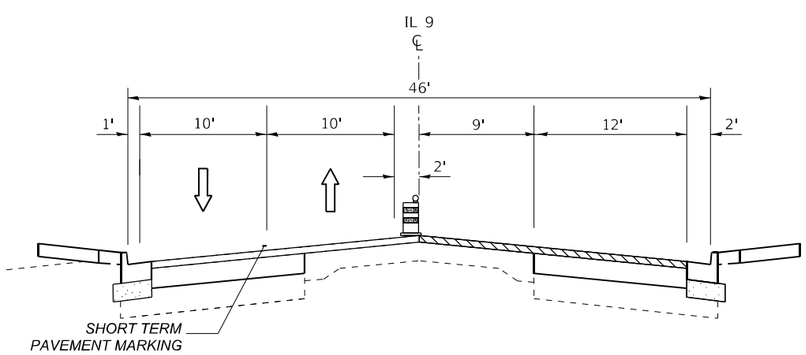

STAGE III NOTES:

CLOSE THE EASTBOUND LANE PER HIGHWAY TRAFFIC CONTROL STANDARD 701502.
REGULATORY SPEED LIMIT SHALL BE XX MPH.
MAINTAIN TWO WAY TRAFFIC THROUGHOUT CONSTRUCTION.

REMOVE SURFACE EXTENDING FROM CENTERLINE TO CURB. COMPLETE ADDITIONAL REMOVAL
AND BINDER BUILD UP IN PROFIILE ADJUSTMENT AREA FROM STATION 424+24 TO STA 430+14.
ADDITIONAL 6" REMOVAL OF SURFACE AT CENTERLINE IS INCLUDED IN THE ASSOCIATED
PAY ITEMS.

MODEL: Default
FILE NAME: pw:\\ildot-pw.bentley.com:PWIDOT\Documents\IDOT Offices\District 4\Projects\D4_68A65\CADData\CADsheets\D468A65-sht-ProjectStaging_DG.dgn

USER NAME = $USER$	DESIGNED -	REVISED -	
	DRAWN -	REVISED -	
PLOT SCALE = 1:40	CHECKED -	REVISED -	
PLOT DATE = 2/14/2025	DATE -	REVISED -	

STATE OF ILLINOIS
DEPARTMENT OF TRANSPORTATION

MAINTENANCE
TRAFFIC CONTROL

SCALE: | SHEET 12 OF 12 SHEETS | STA. TO STA.

F.A.P. RTE.	SECTION	COUNTY	TOTAL SHEETS	SHEET NO.
693	118RS-8,W-2	TAZEWELL	292	100
		CONTRACT NO. 68A65		
		ILLINOIS FED. AID PROJECT		