04-25-2025 LETTING ITEM 141

F.A.I RTE.	SECTION	COUNTY	TOTAL SHEETS	SHEET NO.
57	*	PULASKI	103 *	1
		ILLINOIS	CONTRACT NO. 78A80	

77(1,1-1,1-2,1-3,2,2-1,3)RS-3;Bridge Repair 25-4

* 103 + 2 = 105 TOTAL SHEETS

D-99-059-24

STATE OF ILLINOIS
DEPARTMENT OF TRANSPORTATION

PROPOSED HIGHWAY PLANS

FAI ROUTE 57 (I-57/US 51)
SECTION 77(1,1-1,1-2,1-3,2,2-1,3)RS-3;BRIDGE REPAIR 25-4
PROJECT NHPP-YWWM(315)
RESURFACING & BRIDGE DECK OVERLAY
PULASKI COUNTY

C-99-107-24

FOR INDEX OF SHEETS, SEE SHEET NO. 3

TRAFFIC DATA

TRAFFIC DATA I-57 PULASKI COUNTY

I-57 (FAI 57)
STA. 3.39 - 170.72

	2025	2035	2045
PV =	3,545	3,920	4,320
SU =	3,265	3,605	3,985
MU =	330	365	405
ADT =	7,140	7,890	8,710

TOWNSHIPS

MOUNDS
VILLA RIDGE
PULASKI
ULLIN
WETAUG

BEGIN IMPROVEMENT
STA. 61+77 SB
62+97 NB

BRIDGE DECK OVERLAY
SN 077-0007(08)

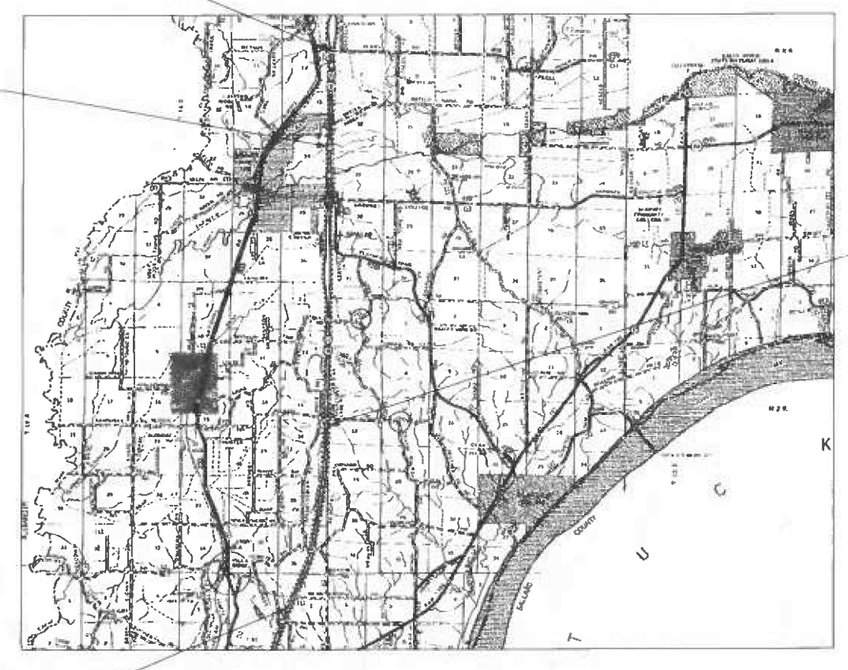

END NB IMPROVEMENT
STA 472+65

END SB IMPROVEMENT
STA 688+75

LOCATION OF SECTION INDICATED THUS: -

DESIGN DESIGNATION : N/A

COORDINATE SYSTEM : ILLINOIS WEST

POSTED SPEED : 70 MPH

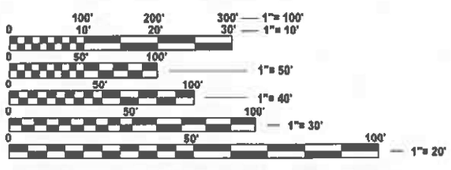

FULL SIZE PLANS HAVE BEEN PREPARED USING STANDARD ENGINEERING SCALES. REDUCED SIZED PLANS WILL NOT CONFORM TO STANDARD SCALES. IN MAKING MEASUREMENTS ON REDUCED PLANS, THE ABOVE SCALES MAY BE USED.

J.U.L.I.E.
JOINT UTILITY LOCATION INFORMATION FOR EXCAVATION
1-800-892-0123
OR 811

STATE OF ILLINOIS
DEPARTMENT OF TRANSPORTATION

SUBMITTED Feb 13 20 25
Lora S. Rensing
REGIONAL ENGINEER

March 21 20 25
ENGINEER OF DESIGN AND ENVIRONMENT

March 21 20 25
DIRECTOR OF HIGHWAYS PROJECT IMPLEMENTATION

PROJECT ENGINEER VALERIE ROLLA
PROJECT DESIGNER NATHANIEL MORRIS

GROSS LENGTH = 62,763.14 FT. (SB) / 41,013.66 FT. (NB) = 11.887 MILES (SB) / 7.768 MILES (NB)
NET LENGTH = 61,797.33 FT. (SB) / 40,047.55 FT. (NB) = 11.704 MILES (SB) / 7.585 MILES (NB)

PRINTED BY THE AUTHORITY OF THE STATE OF ILLINOIS

CONTRACT NO. 78A80

REV - MS

Prepared By: Susan Rhea
DISTRICT STUDIES & PLANS ENGINEER

Examined By:
DISTRICT LAND ACQUISITION ENGINEER

Examined By: Carrie Nelson
DISTRICT PROGRAM DEVELOPMENT ENGINEER

Examined By:
DISTRICT OPERATIONS ENGINEER

Examined By:
DISTRICT PROJECT IMPLEMENTATION ENGINEER

Examined By: Ben Wills
DISTRICT CONSTRUCTION ENGINEER

Examined By: Aaron Hardy
DISTRICT MATERIALS ENGINEER

MODEL: 02-Signature [Sheet]
FILE NAME: c:\pw_work\pwidot\mullany\d0985771\D978A80-Sht\A-Cover_Sig.dgn

USER NAME = Brandy.Maes	DESIGNED -	REVISED -	STATE OF ILLINOIS DEPARTMENT OF TRANSPORTATION	SIGNATURE SHEET	F.A.I. RTE.	SECTION	COUNTY	TOTAL SHEETS	SHEET NO.
	DRAWN -	REVISED -			57	-	PULASKI	103	2
	CHECKED -	REVISED -					CONTRACT NO. 78A80		
PLOT DATE = 2/6/2025	DATE -	REVISED -		SCALE: SHEET 2 OF 2 SHEETS STA. TO STA.		ILLINOIS	FED. AID PROJECT		

77(1,1-1,1-2,1-3,2,2-1,3)RS-3;Bridge Repair 25-4

MTD CROSSING RESTRICTIONS TABLE

FAI 64 (I-64) SN & CENTERLINE STATION			EXISTING FILL HEIGHT OVER BOX CULVERT	THICKNESS OF EXISTING PAVEMENT OVER STRUCTURE	MAXIMUM GROSS WEIGHT RESTRICTIONS	MTD CROSSING RESTRICTIONS
			FOOT	FOOT	TONS	
CULVERTS						
SN 077-7014	MP	16.20	2.1	16" (10" PCC, 6" HMA)	40	Emptied *
SN 077-7034	MP	16.08	6	16" (10" PCC, 6" HMA)	40	Emptied *
SN 077-7033	MP	15.65	6	16" (10" PCC, 6" HMA)	40	Emptied *
SN 077-7032	MP	14.11	10	16" (10" PCC, 6" HMA)	40	Emptied *
SN 077-7026	MP	13.36	2	14" (8" CRPCC, 6" HMA)	40	Emptied *
SN 077-7028	MP	13.28	2	14" (8" CRPCC, 6" HMA)	40	Emptied *
SN 077-7018	MP	12.16	16.4	14.25" (7" CRPCC, 7.25" HMA)	40	Emptied *
SN 077-7027	MP	11.64	2	14" (8" CRPCC, 6" HMA)	40	Emptied *
SN 077-7025	MP	11.61	2	14" (8" CRPCC, 6" HMA)	40	Emptied *
SN 077-7024	MP	11.56	2	14" (8" CRPCC, 6" HMA)	40	Emptied *
SN 077-7023	MP	11.52	2.5	14" (8" CRPCC, 6" HMA)	40	Emptied *
SN 077-7029	MP	11.50	2	14" (8" CRPCC, 6" HMA)	40	Emptied *
SN 077-7022	MP	11.47	2	14" (8" CRPCC, 6" HMA)	40	Emptied *
SN 077-7030	MP	11.43	2	14" (8" CRPCC, 6" HMA)	40	Emptied *
SN 077-7021	MP	11.40	2	14" (8" CRPCC, 6" HMA)	40	Emptied *
SN 077-7031	MP	11.34	3.3	14" (8" CRPCC, 6" HMA)	37.6	Emptied *
SN 077-7020	MP	11.32	2.2	14" (8" CRPCC, 6" HMA)	32.8	Emptied *
SN 077-7019	MP	10.68	10	14" (8" CRPCC, 6" HMA)	40	Emptied *
SN 077-7017	MP	9.92	11.2	14" (8" CRPCC, 6" HMA)	40	Emptied *
SN 077-7016	MP	9.65	28	14" (8" CRPCC, 6" HMA)	40	Emptied *
SN 077-7010	MP	9.00	10.5	14" (8" CRPCC, 6" HMA)	40	Emptied *
SN 077-7013	MP	6.99	8.3	19.25" HMA	40	Emptied *
SN 077-7015	MP	5.88	9	19.25" HMA	40	Emptied *
SN 077-7011	MP	5.41	9	19.25" HMA	40	Emptied *
SN 077-7012	MP	4.71	9	19.25" HMA	40	Emptied *
BRIDGES						
SN 077-0005	MP	13.87	N/A	N/A	40	Emptied *
SN 077-0006	MP	13.88	N/A	N/A	40	Emptied *
SN 077-0007	MP	14.43	N/A	N/A	40	Emptied *
SN 077-0008	MP	14.44	N/A	N/A	40	Emptied *
SN 077-0013	MP	16.14	N/A	N/A	40	Emptied *
SN 077-0014	MP	16.15	N/A	N/A	40	Emptied *
SN 077-0040	MP	14.93	N/A	2.75" HMA	40	Emptied *

GENERAL NOTES

FACTORS USED FOR ESTIMATING PLAN QUANTITIES ARE AS FOLLOWS AND SHALL NOT BE USED FOR THE BASIS OF FINAL QUANTITIES:

ALL HOT MIX ASPHALT 2.016 TONS/CU. YD.

ALL AGGREGATE 2.05 TONS/CU. YD.

THE QUANTITY OF SHORT TERM PAVEMENT MARKING SHOWN IN THE PLANS IS BASED ON ONE APPLICATION EACH FOR THE HMA SURFACE REMOVAL, BINDER COURSE, AND SURFACE COURSE

EXISTING PIPE UNDERDRAIN OUTLETS IN THE FORESLOPES OR MEDIAN SLOPES SHALL BE PRESERVED AND PROTECTED DURING CONSTRUCTION. ANY DAMAGE TO AN UNDERDRAIN OUTLET RESULTING FROM CONSTRUCTION ACTIVITY SHALL BE REPAIRED AT THE CONTRACTOR'S EXPENSE.

LONGITUDINAL JOINT SEALANT SHALL BE PLACED UNDER THE HMA SURFACE COURSE

WHEN SHOULDER RESURFACING OF 6 FEET OR LESS IS ALLOWED TO BE PLACED SIMULTANEOUSLY WITH THE ADJACENT TRAFFIC LANE, THE MAINLINE QUALITY MANAGEMENT PROGRAM WILL BE ENFORCED FOR THE MAINLINE AND SHOULDERS

COMMITMENTS: NONE

INDEX OF SHEETS

HIGHWAY STANDARDS

000001-08 STANDARD SYMBOLS, ABBREVIATIONS AND PATTERNS
001001-02 AREAS OF REINFORCEMENT BARS
001006 DECIMAL OF AN INCH AND OF A FOOT
420001-10 PAVEMENT JOINTS
420401-13 PAVEMENT CONNECTOR (PCC) FOR BRIDGE APPROACH SLAB
420701-03 PAVEMENT WELDED WIRE REINFORCEMENT
442001-04 CLASS A PATCHES
442101-09 CLASS B PATCHES
601001-05 PIPE UNDERDRAINS
601101-02 CONCRETE HEADWALL FOR PIPE UNDERDRAINS
642001-03 SHOULDER RUMBLE STRIPS, 16 IN
701101-05 OFF-ROAD OPERATIONS, MULTILANE, 15 FT TO 24 IN FROM PAVEMENT EDGE
701106-02 OFF-ROAD OPERATIONS, MULTILANE, MORE THAN15 FT AWAY
701400-12 APPROACH TO LANE CLOSURE, FREEWAY_EXPRESSWAY
701401-13 LANE CLOSURE, FREEWAY_EXPRESSWAY
701402-12 LANE CLOSURE, FREEWAY_EXPRESSWAY WITH BARRIER
701411-09 LANE CLOSURE MULTILANE, AT ENTRANCE OR EXIT RAMP, FOR SPEEDS 45 MPH OR MORE
701426-09 LANE CLOSURE, MULTILANE, INTERMITTENT OR MOVING OPERATION, FOR SPEEDS 45 MPH OR MORE
701428-01 TRAFFIC CONTROL, SETUP AND REMOVAL, FREEWAY/EXPRESSWAY
701456-05 PARTIAL EXIT RAMP CLOSURE FREEWAY/EXPRESSWAY
701901-10 TRAFFIC CONTROL DEVICES
780001-05 TYPICAL PAVEMENT MARKINGS
781001-04 TYPICAL APPLICATIONS RAISED REFLECTIVE PAVEMENT MARKERS

REV - MS

Locations	Hot-Mix Asphalt Surface Course (1 ½", 1 ¾")
Mixture Use(s):	Polymerized Hot-Mix Asphalt Surface Course, Mix D, N90
PG:	SBS PG 76 - 22
Design Air Voids:	4.0%, 90 Gyration Design
Mixture Composition: (Gradation Mixture)	IL-9.5mm
Friction Aggregate:	Mix D
Mixture Weight:	112 lbs/sq yd/in
Quality Management Program:	PFP
Sublot Size:	1,000 tons
Material Transfer Device	Yes

Locations	Hot-Mix Asphalt Binder Course (1 ½")
Mixture Use(s):	Hot-Mix Asphalt Binder Course, IL-9.5 FG, N90
PG64-22	PG76-22
Design Air Voids:	4.0%, 90 Gyration Design
Mixture Composition: (Gradation Mixture)	IL-9.5mm
Friction Aggregate:	None
Mixture Weight:	112 lbs/sq yd/in
Quality Management Program:	QC/QA
Sublot Size:	3,000 tons
Material Transfer Device	No

Locations	Hot-Mix Asphalt Shoulders (3 ¾" Lower Lift), Hot-Mix Shoulders 10" (Lower Lifts)
Mixture Use(s):	Hot-Mix Asphalt Binder Course, IL-19.0, N50
PG64-22	PG 64-22
Design Air Voids:	4.0%, 50 Gyration Design
Mixture Composition: (Gradation Mixture)	IL-19.0mm
Friction Aggregate:	None
Mixture Weight:	112 lbs/sq yd/in
Quality Management Program:	QCP: 10' shoulders QC/QA: 4' Shoulders
Sublot Size:	QCP: 1,000 tons QC/QA: 3,000 tons
Material Transfer Device	10' Shoulders - Yes 4' Shoulders - No

Locations	Hot-Mix Asphalt Binder Course (2 ¼")
Mixture Use(s):	Polymerized Hot-Mix Asphalt Binder Course, IL-19.0, N90
PG64-22	SBS PG 76-22
Design Air Voids:	4.0%, 90 Gyration Design
Mixture Composition: (Gradation Mixture)	IL-19.0mm
Friction Aggregate:	None
Mixture Weight:	112 lbs/sq yd/in
Quality Management Program:	PFP
Sublot Size:	1,000 tons
Material Transfer Device	Yes

Locations	Hot-Mix Shoulders 2", Hot-Mix Shoulders 10" (Top Lift), Hot-Mix Asphalt Shoulders (3 ¾" and 3 ¼" Top Lifts)
Mixture Use(s):	Hot-Mix Asphalt Surface Course, Mix C, N30
PG:	PG64 -22
Design Air Voids:	4.0%, 30 Gyration Design
Mixture Composition: (Gradation Mixture)	IL-9.5L
Friction Aggregate:	None
Mixture Weight:	112 lbs/sq yd/in
Quality Management Program:	QCP: 10' shoulders QC/QA: 4' Shoulders
Sublot Size:	QCP: 1000 tons QC/QA: 3,000 tons
Material Transfer Device	10' Shoulders - Yes 4' Shoulders - No

Locations	Hot-Mix Asphalt Shoulder (3 ¼" Lower Lift)
Mixture Use(s):	Hot-Mix Asphalt Binder Course, IL-9.5 FG, N50
PG64-22	PG 64-22
Design Air Voids:	4.0%, 50 Gyration Design
Mixture Composition: (Gradation Mixture)	IL-9.5mm
Friction Aggregate:	None
Mixture Weight:	112 lbs/sq yd/in
Quality Management Program:	QCP: 10' shoulders QC/QA: 4' Shoulders
Sublot Size:	QCP: 1,000 tons QC/QA: 3,000 tons
Material Transfer Device	10' Shoulders: Yes 4' Shoulders: No

Lift thicknesses

Hot Mix Asphalt Shoulders 3 ¾":
- 1 ½" Surface Course
- 2 ¼" Binder Course

Hot Mix Asphalt Shoulders 3 ¼":
- 1 ¾" Surface Course
- 1 ½" Binder Course

Hot Mix Asphalt Shoulders 10":
- 1 ½" Surface Course
- 2 ¼" Binder Course
- 2 ¼" Binder Course
- 4" Binder Course

STATION EQUATIONS USED

EQ STA 66+47.82 ℄ SBL (BK) = STA 65+79.97 ℄ MEDIAN (AH)
EQ STA 66+27.18 ℄ NBL (BK) = STA 65+79.97 ℄ MEDIAN (AH)
EQ STA 259+37.77 ℄ MEDIAN (BK) = STA 259+39.47 ℄ SBL (AH)
EQ STA 259+37.77 ℄ MEDIAN (BK) = STA 259+39.47 ℄ NBL (AH)
EQ STA 348+23.50 ℄ SBL (BK) = STA 348+44.35 ℄ MEDIAN (AH)
EQ STA 348+23.50 ℄ NBL (BK) = STA 348+44.35 ℄ MEDIAN (AH)

OMISSIONS

SN 077-0014 (SB)	STA	80+45.02	TO	82+00.35
SN 077-0013 (NB)	STA	81+11.34	TO	82+66.97
SN 077-0008 (SB)	STA	168+90.10	TO	174+97.90
SN 077-0007 (NB)	STA	168+90.10	TO	174+97.90
SN 077-0005 (SB)	STA	200+40.65	TO	202+22.48
SN 077-0006 (NB)	STA	200+21.51	TO	202+03.34

STATIONING FOR STRUCTURES IS FROM THE MEDIAN ALIGNMENT USED IN THE ROADWAY PLANS

SUMMARY OF QUANTITIES

COUNTY:	PULASKI CO	PULASKI CO
ROUTE:	FAI 57	FAI 57
FUNDING:	90% FEDERAL / 10% STATE	90% FEDERAL / 10% STATE
LOCATION:	RURAL	RURAL

CODE NUMBER	ITEM DESCRIPTION	UNIT	TOTAL QUANTITY	ROADWAY 0005	STRUCTURE 0013
20200100	EARTH EXCAVATION	CU YD	5	0	5
20400800	FURNISHED EXCAVATION	CU YD	20	0	20
40600290	BITUMINOUS MATERIALS (TACK COAT)	POUND	260,515	259,800	715
40600370	LONGITUDINAL JOINT SEALANT	FOOT	101,866	101,866	0
40600405	MATERIAL TRANSFER DEVICE	TON	59,533	59,533	0
40600982	HOT-MIX ASPHALT SURFACE REMOVAL - BUTT JOINT	SQ YD	1,341	868	473
40600990	TEMPORARY RAMP	SQ YD	738	588	150
40603219	POLYMERIZED HOT-MIX ASPHALT BINDER COURSE, IL-9.5FG, N90	TON	92	92	0
40603240	POLYMERIZED HOT-MIX ASPHALT BINDER COURSE, IL-19.0, N90	TON	34,937	34,937	0
40604164	POLYMERIZED HOT-MIX ASPHALT SURFACE COURSE, IL-9.5FG, MIX "D", N90	TON	23,433	23,433	0
42000060	WELDED WIRE REINFORCEMENT	SQ YD	238	0	238
42000080	PAVEMENT CONNECTOR (PCC) FOR BRIDGE APPROACH SLAB	SQ YD	238	0	238
44000155	HOT-MIX ASPHALT SURFACE REMOVAL, 1 1/2"	SQ YD	435,071	435,071	0

REV - MS

SUMMARY OF QUANTITIES - CONT

COUNTY:	PULASKI CO	PULASKI CO
ROUTE:	FAI 57	FAI 57
FUNDING:	90% FEDERAL / 10% STATE	90% FEDERAL / 10% STATE
LOCATION:	RURAL	RURAL

CODE NUMBER	ITEM DESCRIPTION	UNIT	TOTAL QUANTITY	ROADWAY 0005	STRUCTURE 0013
44000157	HOT-MIX ASPHALT SURFACE REMOVAL, 2"	SQ YD	916	0	916
44000162	HOT-MIX ASPHALT SURFACE REMOVAL, 3 1/4"	SQ YD	5,546	5,546	0
44000164	HOT-MIX ASPHALT SURFACE REMOVAL, 3 3/4"	SQ YD	11,156	11,156	0
44004250	PAVED SHOULDER REMOVAL	SQ YD	104	0	104
44200620	CLASS A PATCHES, TYPE II, 14 INCH	SQ YD	125	125	0
44200624	CLASS A PATCHES, TYPE III, 14 INCH	SQ YD	16	16	0
44201043	CLASS B PATCHES, TYPE II, 16 INCH	SQ YD	499	499	0
44201047	CLASS B PATCHES, TYPE III, 16 INCH	SQ YD	200	200	0
44201048	CLASS B PATCHES, TYPE IV, 16 INCH	SQ YD	347	347	0
44201297	DOWEL BARS 1"	EACH	1,680	1,680	0
44213000	PATCHING REINFORCEMENT	SQ YD	141	141	0
44213200	SAW CUTS	FOOT	5,308	5,308	0
44213204	TIE BARS 3/4"	EACH	33	33	0

SUMMARY OF QUANTITIES - CONT

COUNTY:	PULASKI CO	PULASKI CO
ROUTE:	FAI 57	FAI 57
FUNDING:	90% FEDERAL / 10% STATE	90% FEDERAL / 10% STATE
LOCATION:	RURAL	RURAL

CODE NUMBER	ITEM DESCRIPTION	UNIT	TOTAL QUANTITY	ROADWAY 0005	STRUCTURE 0013
48102100	AGGREGATE WEDGE SHOULDER, TYPE B	TON	3,075	3,075	0
48203005	HOT-MIX ASPHALT SHOULDERS, 2"	SQ YD	103	0	103
48203037	HOT-MIX ASPHALT SHOULDERS, 10"	SQ YD	104	0	104
48203100	HOT-MIX ASPHALT SHOULDERS	TON	33,771	33,771	0
50102400	CONCRETE REMOVAL	CU YD	56.6	0	56.6
50200100	STRUCTURE EXCAVATION	CU YD	140	0	140
50300225	CONCRETE STRUCTURES	CU YD	48	0	48
50300255	CONCRETE SUPERSTRUCTURE	CU YD	74.4	0	74.4
50300300	PROTECTIVE COAT	SQ YD	2,802	0	2,802
50301350	CONCRETE SUPERSTRUCTURE (APPROACH SLAB)	CU YD	129.4	0	129.4
50500405	FURNISHING AND ERECTING STRUCTURAL STEEL	POUND	4,610	0	4,4610
50800205	REINFORCEMENT BARS, EPOXY COATED	POUND	88,540	0	88,540
50800515	BAR SPLICERS	EACH	1,138	0	1,138

REV SK

SUMMARY OF QUANTITIES - CONT

COUNTY:	PULASKI CO	PULASKI CO
ROUTE:	FAI 57	FAI 57
FUNDING:	90% FEDERAL / 10% STATE	90% FEDERAL / 10% STATE
LOCATION:	RURAL	RURAL

CODE NUMBER	ITEM DESCRIPTION	UNIT	TOTAL QUANTITY	ROADWAY 0005	STRUCTURE 0013
52100010	ELASTOMERIC BEARING ASSEMBLY, TYPE I	EACH	28	0	28
52100520	ANCHOR BOLTS, 1"	EACH	56	0	56
52200020	TEMPORARY SOIL RETENTION SYSTEM	SQ FT	112	0	112
58600101	GRANULAR BACKFILL FOR STRUCTURES	CU YD	120	0	120
59100100	GEOCOMPOSITE WALL DRAIN	SQ YD	40	0	40
60100060	CONCRETE HEADWALLS FOR PIPE DRAINS	EACH	4	0	4
60146304	PIPE UNDERDRAINS FOR STRUCTURES 4"	FOOT	308	0	308
64200116	SHOULDER RUMBLE STRIPS, 16 INCH	FOOT	202,307	202,307	0
67100100	MOBILIZATION	L SUM	1.0	0.5	0.5
70100207	TRAFFIC CONTROL AND PROTECTION, STANDARD 701402	EACH	2	0	2
70100420	TRAFFIC CONTROL AND PROTECTION, STANDARD 701411	EACH	4	4	0
70100800	TRAFFIC CONTROL AND PROTECTION, STANDARD 701401	L SUM	1	1	0
70100825	TRAFFIC CONTROL AND PROTECTION, STANDARD 701456	L SUM	1	1	0

SUMMARY OF QUANTITIES - CONT

	CODE NUMBER	ITEM DESCRIPTION	UNIT	TOTAL QUANTITY	ROADWAY 0005	STRUCTURE 0013
				COUNTY:	PULASKI CO	PULASKI CO
				ROUTE:	FAI 57	FAI 57
				FUNDING:	90% FEDERAL / 10% STATE	90% FEDERAL / 10% STATE
				LOCATION:	RURAL	RURAL
	70107025	CHANGEABLE MESSAGE SIGN	CAL DA	28	28	0
	70300100	SHORT TERM PAVEMENT MARKING	FOOT	37,341	36,829	512
	70300150	SHORT TERM PAVEMENT MARKING REMOVAL	SQ FT	18,594	18,420	174
	70300241	TEMPORARY PAVEMENT MARKING - LINE 6"- PAINT	FOOT	230,055	225,825	4,230
	70300251	TEMPORARY PAVEMENT MARKING - LINE 8"- PAINT	FOOT	1,782	1,782	0
	70400100	TEMPORARY CONCRETE BARRIER	FOOT	1,175	0	1,175
	70400125	PINNING TEMPORARY CONCRETE BARRIER	EACH	66	0	66
	70400200	RELOCATE TEMPORARY CONCRETE BARRIER	FOOT	1,150	0	1,150
	70600251	IMPACT ATTENUATORS, TEMPORARY (NON- REDIRECTIVE, NARROW), TEST LEVEL 3	EACH	2	0	2
	70600352	IMPACT ATTENUATORS, RELOCATE (NON- REDIRECTIVE,NARROW), TEST LEVEL 3	EACH	2	0	2
*	78000100	THERMOPLASTIC PAVEMENT MARKING - LETTERS AND SYMBOLS	SQ FT	924	924	0
*	78000400	THERMOPLASTIC PAVEMENT MARKING - LINE 6"	FOOT	230,055	230,055	0
*	78000500	THERMOPLASTIC PAVEMENT MARKING - LINE 8"	FOOT	1,782	1,782	0

* SPECIALTY ITEM

SUMMARY OF QUANTITIES - CONT

	CODE NUMBER	ITEM DESCRIPTION	UNIT	TOTAL QUANTITY	PULASKI CO FAI 57 90% FEDERAL / 10% STATE RURAL ROADWAY 0005	PULASKI CO FAI 57 90% FEDERAL / 10% STATE RURAL STRUCTURE 0013
*	78011000	GROOVING FOR RECESSED PAVEMENT MARKING, LETTERS AND SYMBOLS	SQ FT	2,005	2,005	0
*	78011035	GROOVING FOR RECESSED PAVEMENT MARKING 7"	FOOT	230,055	230,055	0
*	78011045	GROOVING FOR RECESSED PAVEMENT MARKING 9"	FOOT	1,782	1,782	0
*	78100100	RAISED REFLECTIVE PAVEMENT MARKER	EACH	1,405	1,405	0
	78300200	RAISED REFLECTIVE PAVEMENT MARKER REMOVAL	EACH	1,405	1,405	0
	78300201	PAVEMENT MARKING REMOVAL - GRINDING	SQ FT	119,686	115,923	3,763
	X0322278	RODENT SHIELDS	EACH	462	462	0
	X5030250	BRIDGE DECK GROOVING (LONGITUDINAL)	SQ YD	1,960	0	1,960
	X5030275	CONCRETE WEARING SURFACE REMOVAL	SQ YD	2246	0	2246
	X5030301	CONCRETE WEARING SURFACE (VARIABLE DEPTH)	SQ YD	2184	0	2184
	X5051204	STRUCTURAL STEEL REMOVAL	POUND	4,720	0	4,720
	X5051206	STRUCTURAL STEEL REPAIR	POUND	1,212	0	1,212
	X5080530	BAR TERMINATORS	EACH	552	0	552

* SPECIALTY ITEM

rev. SK

SUMMARY OF QUANTITIES - CONT

COUNTY:	PULASKI CO	PULASKI CO
ROUTE:	FAI 57	FAI 57
FUNDING:	90% FEDERAL / 10% STATE	90% FEDERAL / 10% STATE
LOCATION:	RURAL	RURAL

CODE NUMBER	ITEM DESCRIPTION	UNIT	TOTAL QUANTITY	ROADWAY 0005	STRUCTURE 0013
Z0001899	JACK AND REMOVE EXISTING BEARINGS	EACH	28	0	28
Z0004552	APPROACH SLAB REMOVAL	SQ YD	529	0	529
Z0007101	CONTAINMENT AND DISPOSAL OF LEAD PAINT CLEANING RESIDUES NO. 1	L SUM	1	0	1
Z0007102	CONTAINMENT AND DISPOSAL OF LEAD PAINT CLEANING RESIDUES NO. 2	L SUM	1	0	1
Z0010501	CLEANING AND PAINTING STEEL BRIDGE NO. 1	L SUM	1	0	1
Z0010502	CLEANING AND PAINTING STEEL BRIDGE NO. 2	L SUM	1	0	1
Z0012157	BRIDGE DECK SCARIFICATION 1/2"	SQ YD	2,184	0	2,184
Z0012754	STRUCTURAL REPAIR OF CONCRETE (DEPTH EQUAL TO OR LESS THAN 5 INCHES)	SQ FT	42	0	42
Z0016001	DECK SLAB REPAIR (FULL DEPTH, TYPE I)	SQ YD	1	0	1
Z0016002	DECK SLAB REPAIR (FULL DEPTH, TYPE II)	SQ YD	19	0	19
Z0029090	DIAMOND GRINDING (BRIDGE SECTION)	SQ YD	2,464	0	2,464
Ø Z0076600	TRAINEES	HOUR	1000	1000	
Z0037100	PAVEMENT FABRIC, EPOXY COATED	SQ YD	547	547	0
Ø Z0076604	TRAINEES TRAINING PROGRAM GRADUATE	HOUR	1000	1000	

Ø 0042

REV - MS

MODEL: SOQ 7 [Sheet]
FILE NAME: c:\pw_work\pwidot\hilleyd\d0985771\D78A80-ShtC-SoQ.dgn

USER NAME = Brandy.Maes	DESIGNED -	REVISED -	STATE OF ILLINOIS DEPARTMENT OF TRANSPORTATION
	DRAWN -	REVISED -	
	CHECKED -	REVISED -	
PLOT DATE = 2/6/2025	DATE -	REVISED -	

SCALE: SHEET 10 OF 7 SHEETS STA. TO STA.

F.A.I RTE.	SECTION	COUNTY	TOTAL SHEETS	SHEET NO.
57	*	PULASKI	103	10
		CONTRACT NO. 78A80		
	ILLINOIS	FED. AID PROJECT		

77(1,1-1,1-2,1-3,2,2-1,3)RS-3;Bridge Repair 25-4

TYPICAL SECTION #1

NB & SB LANES
(LOOKING IN DIRECTION OF TRAVEL)
INLAY UNDER SN 077-0028

* MATCH EXISTING CROSS SLOPE

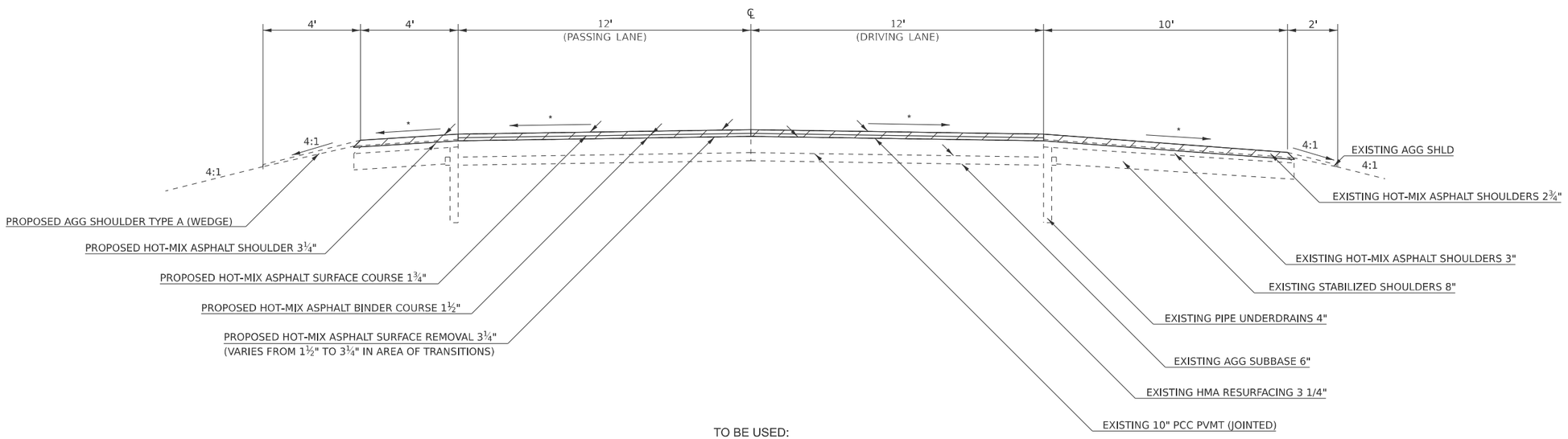

TO BE USED:
SB LANES: STA 61+77.00 ℄ SBL TO STA 69+49.79 ℄ MEDIAN
NB LANES: STA 62+97.00 ℄ NBL TO STA 69+49.79 ℄ MEDIAN

STATION EQUATIONS USED:
EQ STA 66+47.80 ℄ SBL (BK) = STA 65+79.97 ℄ MEDIAN (AH)
EQ STA 66+27.18 ℄ NBL (BK) = STA 65+79.97 ℄ MEDIAN (AH)

MODEL: Typical Section-1 [Sheet]
FILE NAME: c:\pw_work\pwidot\nathaniel.morris@illinois.gov\d0985771\D978A80-Sht\D-Typicals.dgn

USER NAME = nathaniel.morris	DESIGNED -	REVISED -	
	DRAWN -	REVISED -	
	CHECKED -	REVISED -	
PLOT DATE = 2/14/2025	DATE -	REVISED -	

STATE OF ILLINOIS
DEPARTMENT OF TRANSPORTATION

TYPICAL SECTION 1

SCALE: | SHEET 11 OF 9 SHEETS | STA. | TO STA.

F.A.I RTE.	SECTION	COUNTY	TOTAL SHEETS	SHEET NO.
57	*	PULASKI	103	11

CONTRACT NO. 78A80

ILLINOIS | FED. AID PROJECT

77(1,1-1,1-2,1-3,2,2-1,3)RS-3;Bridge Repair 25-4

TYPICAL SECTION #2

NB & SB LANES
(LOOKING IN DIRECTION OF TRAVEL)

* MATCH EXISTING CROSS SLOPE

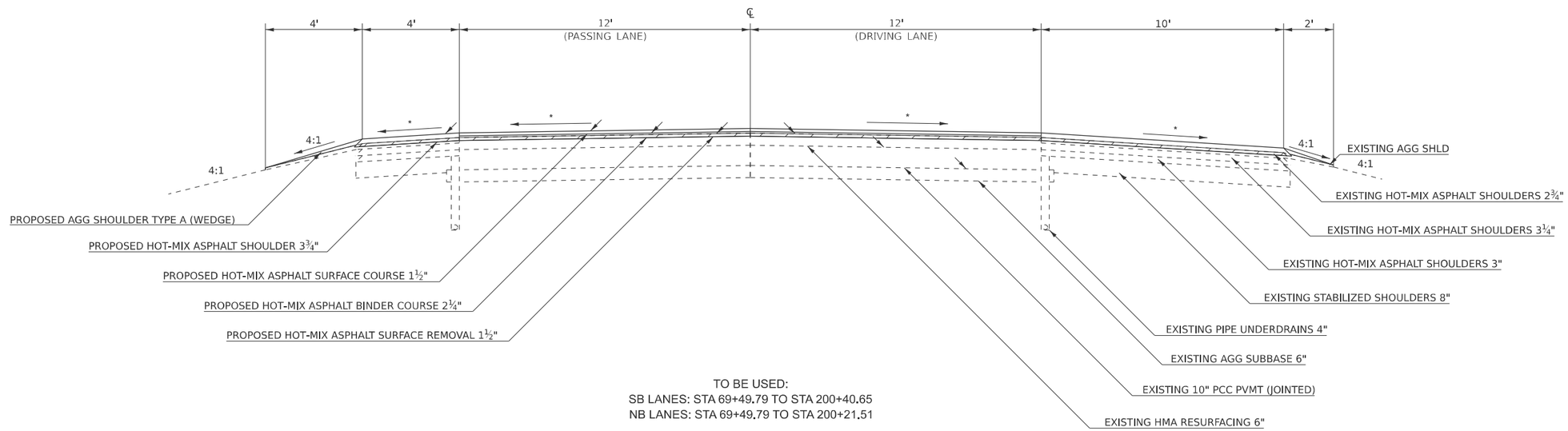

TO BE USED:
SB LANES: STA 69+49.79 TO STA 200+40.65
NB LANES: STA 69+49.79 TO STA 200+21.51

BRIDGE OMMISIONS:
SB LANES:
STA 80+45.02 TO STA 82+00.35
STA 168+90.10 TO 174+97.90
STA 200+40.65 TO 202+22.48
NB LANES:
STA 81+11.64 TO STA 82+66.97
STA 168+90.10 TO STA 174+97.90
STA 200+21.51 TO STA 202+03.34

MODEL: Typical Section-1 [Sheet]
FILE NAME: c:\pw_work\pwidot\nathaniel.morris@illinois.gov\d0985771\D978A80-ShtD-Typicals.dgn

USER NAME = nathaniel.morris	DESIGNED -	REVISED -	
	DRAWN -	REVISED -	
	CHECKED -	REVISED -	
PLOT DATE = 2/14/2025	DATE -	REVISED -	

STATE OF ILLINOIS
DEPARTMENT OF TRANSPORTATION

TYPICAL SECTION 2

SCALE: SHEET 12 OF 9 SHEETS STA. TO STA.

F.A.I RTE.	SECTION	COUNTY	TOTAL SHEETS	SHEET NO.
57	*	PULASKI	103	12
		CONTRACT NO. 78A80		
	ILLINOIS	FED. AID PROJECT		

77(1,1-1,1-2,1-3,2,2-1,3)RS-3;Bridge Repair 25-4

TYPICAL SECTION #3

NB & SB LANES
(LOOKING IN DIRECTION OF TRAVEL)

* MATCH EXISTING CROSS SLOPE

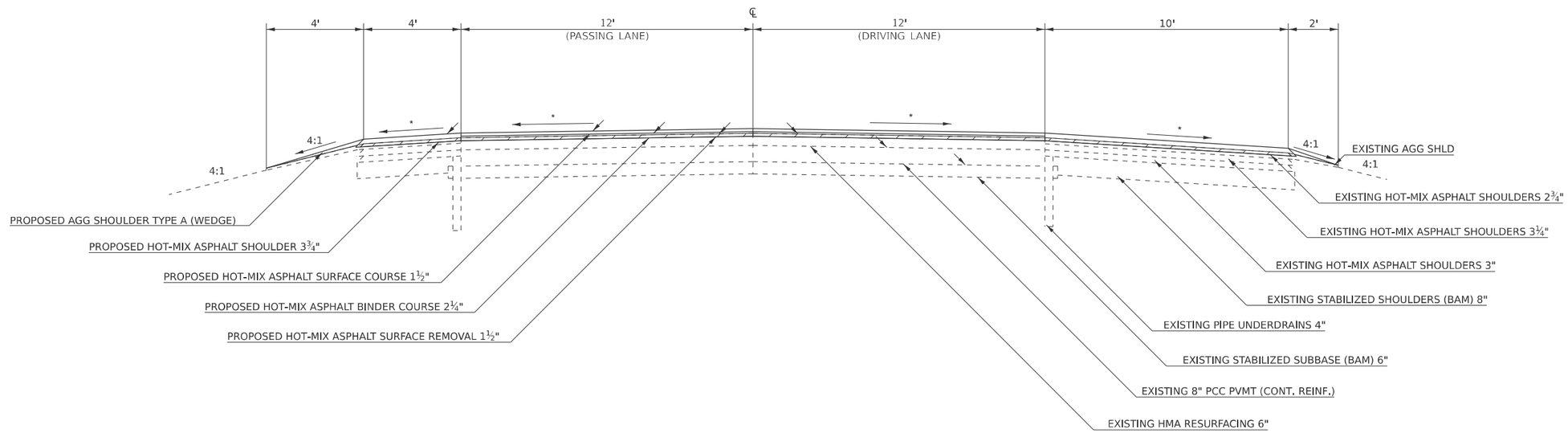

TO BE USED:
SB LANES: STA 202+22.48 TO STA 228+50
NB LANES: STA 202+03.34 TO STA 228+50

MODEL: Typical Section-2 [Sheet]
FILE NAME: c:\pw_work\pwidot\nathaniel.morris@illinois.gov\d0985771\D978A80-SmD-Typicals.dgn

USER NAME = nathaniel.morris	DESIGNED -	REVISED -	
	DRAWN -	REVISED -	
	CHECKED -	REVISED -	
PLOT DATE = 2/14/2025	DATE -	REVISED -	

STATE OF ILLINOIS
DEPARTMENT OF TRANSPORTATION

TYPICAL SECTION 3

SCALE: | SHEET 13 OF 9 SHEETS | STA. | TO STA.

F.A.I RTE.	SECTION	COUNTY	TOTAL SHEETS	SHEET NO.
57	*	PULASKI	103	13
		CONTRACT NO. 78A80		
	ILLINOIS	FED. AID PROJECT		

77(1,1-1,1-2,1-3,2,2-1,3)RS-3;Bridge Repair 25-4

TYPICAL SECTION #4

NB & SB LANES
(LOOKING IN DIRECTION OF TRAVEL)

* MATCH EXISTING CROSS SLOPE

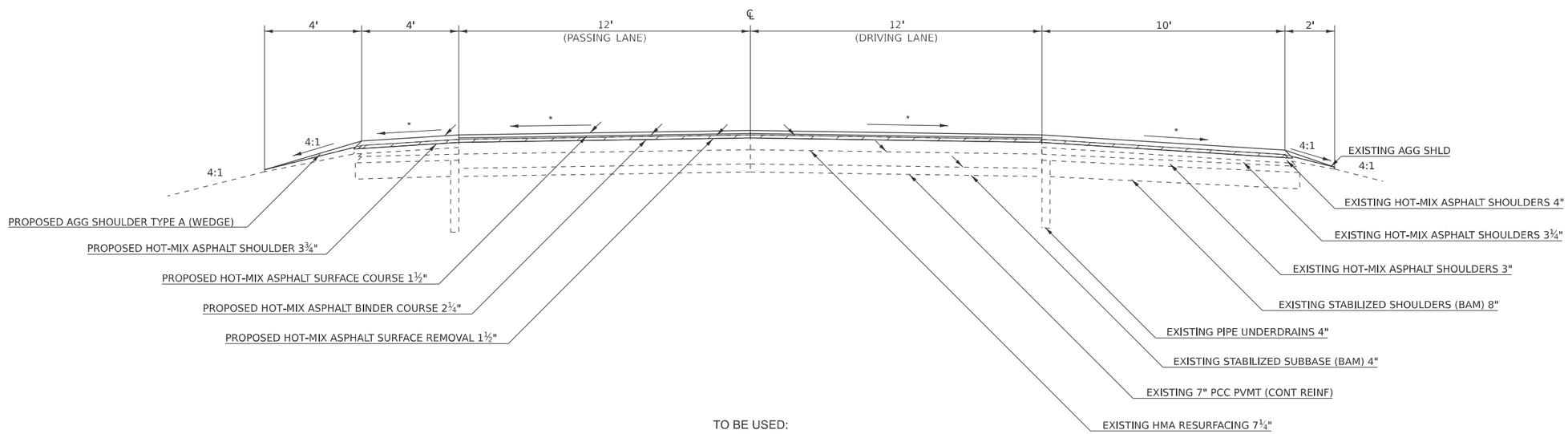

TO BE USED:
NB & SB LANES
STA 228+50.00 TO STA 357+71.00
STA 363+90.00 TO STA 467+35.00

STATION EQUATIONS USED:
EQ STA 259+37.33 ℄ MEDIAN (BK) = STA 259+39.47 ℄ SBL / ℄ NBL (AH)
EQ STA 348+43.34 ℄ SBL (BK) = STA 348+44.35 ℄ MEDIAN (AH)
EQ STA 348+23.50 ℄ NBL (BK) = STA 348+44.35 ℄ MEDIAN (AH)

MODEL: Typical Section-3 [Sheet]
FILE NAME: c:\pw_work\pwidot\nathaniel.morris@illinois.gov\d0985771\D978A80-SHD-Typicals.dgn

USER NAME = nathaniel.morris	DESIGNED -	REVISED -	STATE OF ILLINOIS DEPARTMENT OF TRANSPORTATION
	DRAWN -	REVISED -	
	CHECKED -	REVISED -	
PLOT DATE = 2/14/2025	DATE -	REVISED -	

TYPICAL SECTION 4

SCALE: | SHEET 14 OF 9 SHEETS | STA. | TO STA.

F.A.I RTE.	SECTION	COUNTY	TOTAL SHEETS	SHEET NO.
57	*	PULASKI	103	14

CONTRACT NO. 78A80

ILLINOIS FED. AID PROJECT

77(1,1-1,1-2,1-3,2,2-1,3)RS-3;Bridge Repair 25-4

TYPICAL SECTION #5

NB & SB LANES
(LOOKING IN DIRECTION OF TRAVEL)
INLAY UNDER SN 077-0032

* MATCH EXISTING CROSS SLOPE

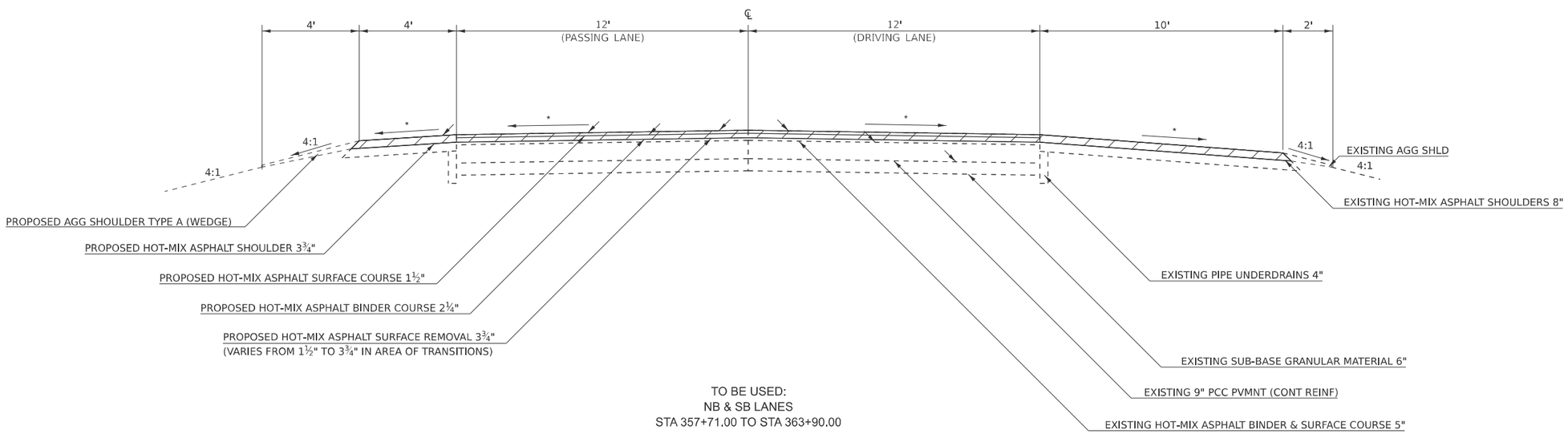

TO BE USED:
NB & SB LANES
STA 357+71.00 TO STA 363+90.00

MODEL: Typical Section-5 [Sheet]
FILE NAME: c:\pw_work\pwidot\nathaniel.morris@illinois.gov\d0985771\D978A80-ShtD-Typicals.dgn

USER NAME = nathaniel.morris	DESIGNED -	REVISED -	
	DRAWN -	REVISED -	
	CHECKED -	REVISED -	
PLOT DATE = 2/14/2025	DATE -	REVISED -	

STATE OF ILLINOIS
DEPARTMENT OF TRANSPORTATION

TYPICAL SECTION 5

SCALE: | SHEET 15 OF 9 SHEETS | STA. | TO STA.

F.A.I RTE.	SECTION	COUNTY	TOTAL SHEETS	SHEET NO.
57	*	PULASKI	103	15
		CONTRACT NO. 78A80		
	ILLINOIS	FED. AID PROJECT		

77(1,1-1,1-2,1-3,2,2-1,3)RS-3;Bridge Repair 25-4

TYPICAL SECTION #6

NB & SB LANES
(LOOKING IN DIRECTION OF TRAVEL)
INLAY UNDER SN 077-0033

* MATCH EXISTING CROSS SLOPE

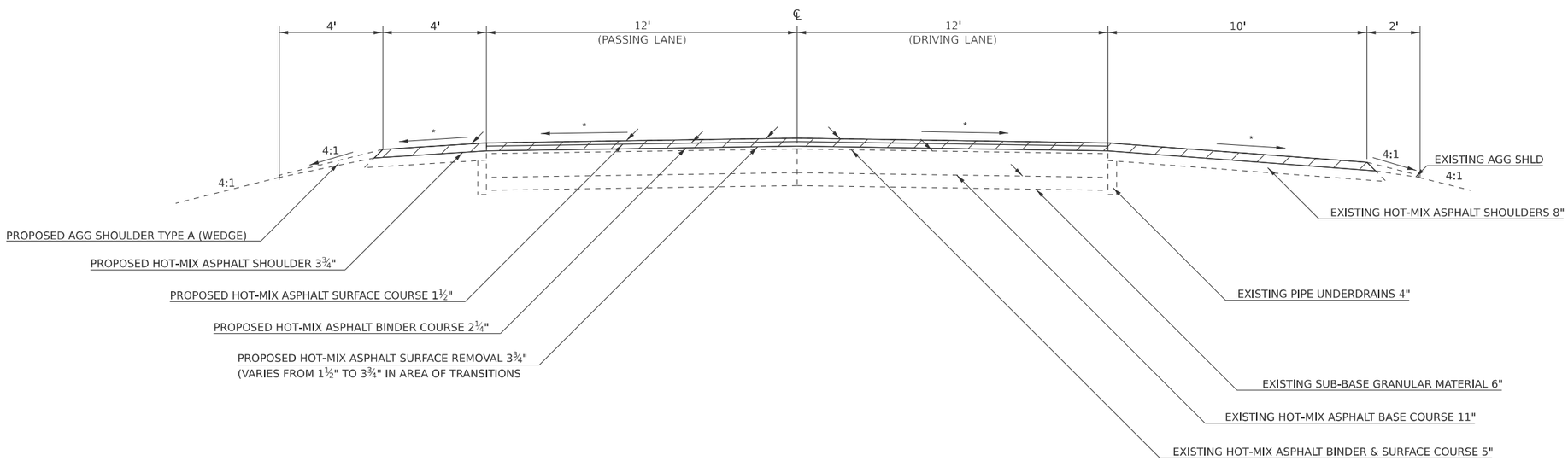

TO BE USED:
NB & SB LANES
STA 467+35.00 TO 472+65.00 (END NB RESURFACING)

MODEL: Typical Section-6 [Sheet]
FILE NAME: c:\pw_work\pwidot\nathaniel.morris\d0985771\D978A80-SntD-Typicals.dgn

USER NAME = nathaniel.morris	DESIGNED -	REVISED -	
	DRAWN -	REVISED -	
	CHECKED -	REVISED -	
PLOT DATE = 2/14/2025	DATE -	REVISED -	

STATE OF ILLINOIS
DEPARTMENT OF TRANSPORTATION

TYPICAL SECTION 6

SCALE: | SHEET 16 OF 9 SHEETS | STA. | TO STA.

F.A.I RTE.	SECTION	COUNTY	TOTAL SHEETS	SHEET NO.
57	*	PULASKI	103	16
		CONTRACT NO. 78A80		
	ILLINOIS	FED. AID PROJECT		

77(1,1-1,1-2,1-3,2,2-1,3)RS-3;Bridge Repair 25-4

TYPICAL SECTION #7

SB LANES ONLY
(LOOKING IN DIRECTION OF TRAVEL)

* MATCH EXISTING CROSS SLOPE

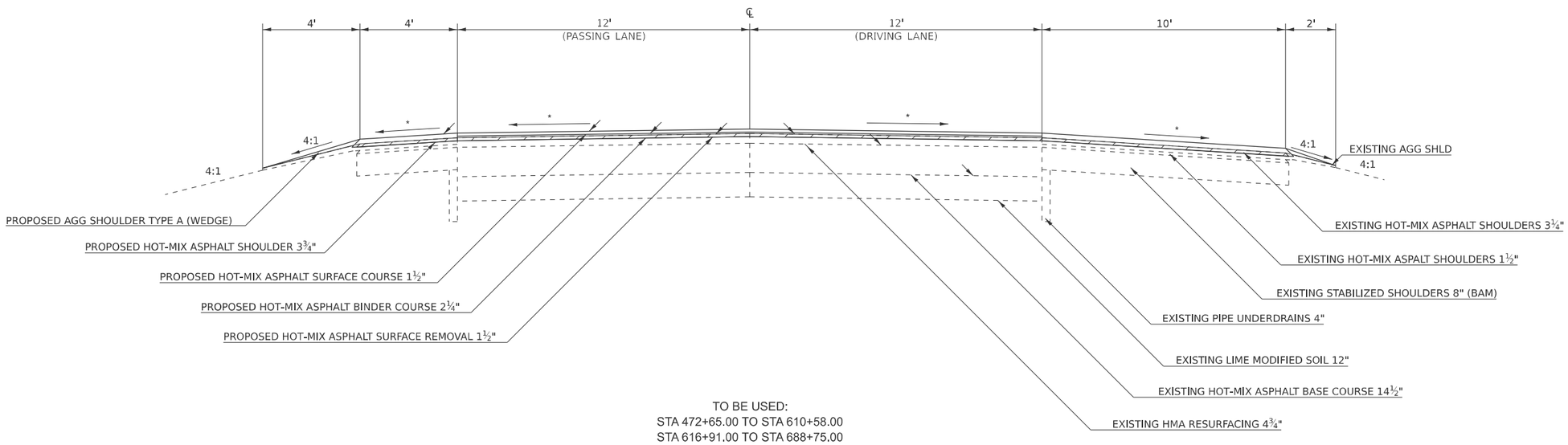

TO BE USED:
STA 472+65.00 TO STA 610+58.00
STA 616+91.00 TO STA 688+75.00

MODEL: Typical Section-7 [Sheet]
FILE NAME: c:\pw_work\pwidot\nathaniel.morris@illinois.gov\d0985771\D978A80-StnD-Typicals.dgn

USER NAME = nathaniel.morris	DESIGNED -	REVISED -	
	DRAWN -	REVISED -	
	CHECKED -	REVISED -	
PLOT DATE = 2/14/2025	DATE -	REVISED -	

STATE OF ILLINOIS
DEPARTMENT OF TRANSPORTATION

TYPICAL SECTION 7

SCALE: | SHEET 17 OF 9 SHEETS | STA. | TO STA.

F.A.I RTE.	SECTION	COUNTY	TOTAL SHEETS	SHEET NO.
57	*	PULASKI	103	17
		CONTRACT NO. 78A80		
	ILLINOIS	FED. AID PROJECT		

77(1,1-1,1-2,1-3,2,2-1,3)RS-3;Bridge Repair 25-4

TYPICAL SECTION #8

SB LANES ONLY
(LOOKING IN DIRECTION OF TRAVEL)
INLAY UNDER SN 077-0034

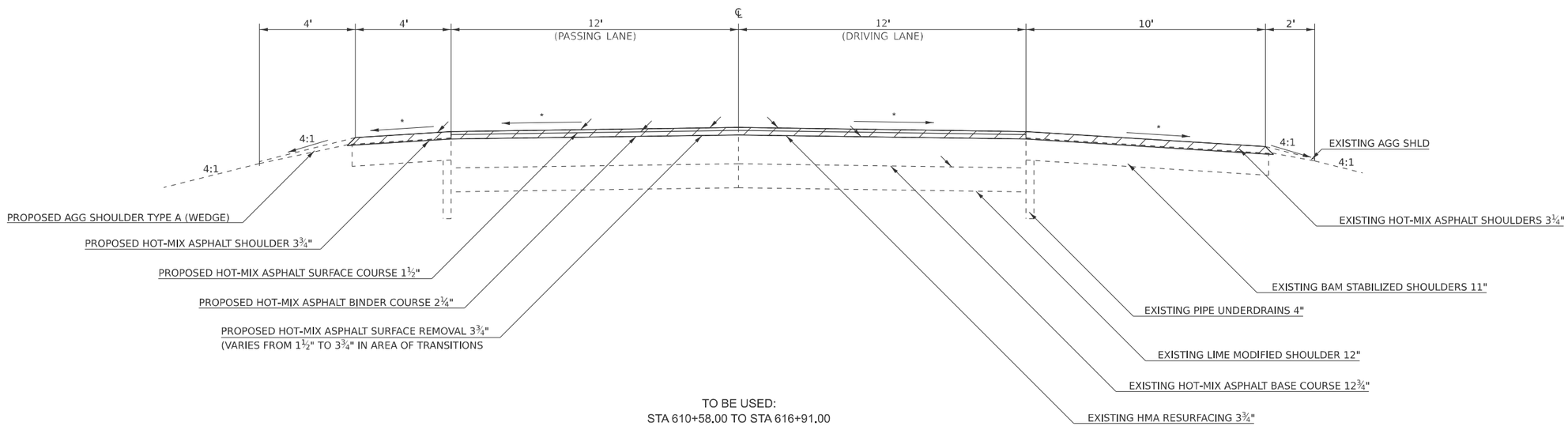

TO BE USED:
STA 610+58.00 TO STA 616+91.00

MODEL: Typical Section-8 [Sheet]
FILE NAME: c:\pw_work\pw\dot\nathaniel.morris@illinois.gov\d0985771\D978A80-ShtD-Typicals.dgn

USER NAME = nathaniel.morris	DESIGNED -	REVISED -	STATE OF ILLINOIS DEPARTMENT OF TRANSPORTATION
	DRAWN -	REVISED -	
	CHECKED -	REVISED -	
PLOT DATE = 2/14/2025	DATE -	REVISED -	

TYPICAL SECTION 8

SCALE: SHEET 18 OF 9 SHEETS STA. TO STA.

F.A.I RTE.	SECTION	COUNTY	TOTAL SHEETS	SHEET NO.
57	*	PULASKI	103	18
		CONTRACT NO. 78A80		
		ILLINOIS FED. AID PROJECT		

77(1,1-1,1-2,1-3,2,2-1,3)RS-3;Bridge Repair 25-4

TYPICAL SECTION #9

RAMPS
(LOOKING IN DIRECTION OF TRAVEL)

* MATCH EXISTING CROSS SLOPE

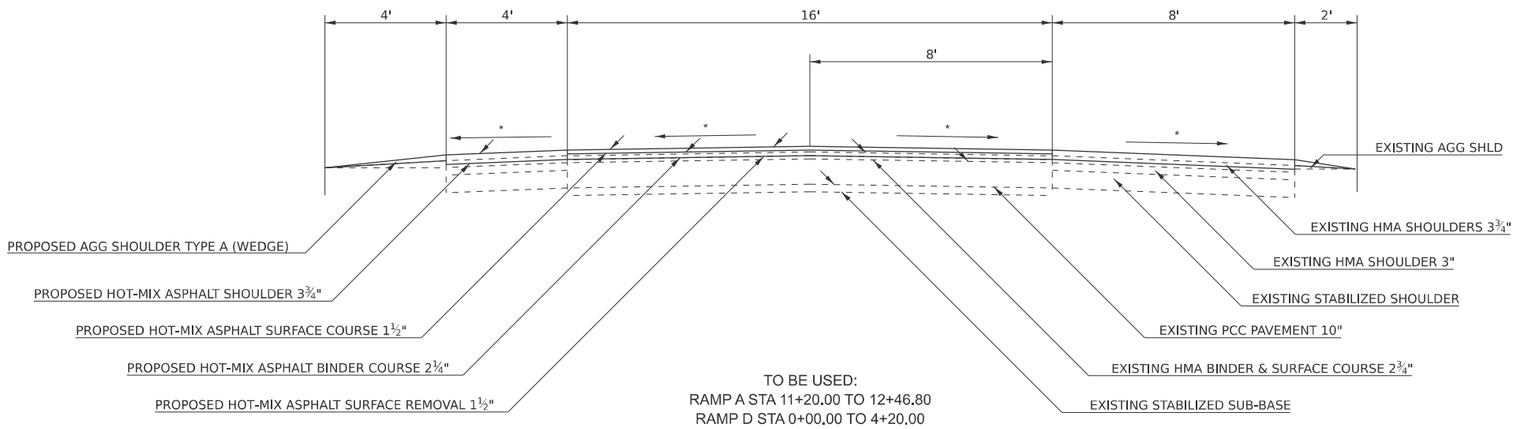

TO BE USED:
RAMP A STA 11+20.00 TO 12+46.80
RAMP D STA 0+00.00 TO 4+20.00

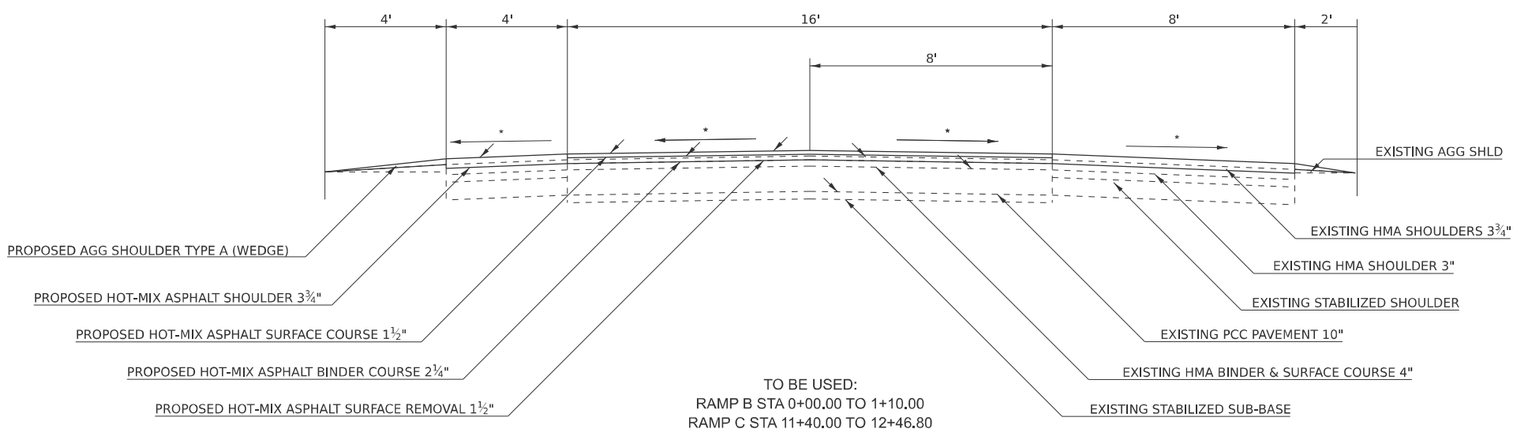

TO BE USED:
RAMP B STA 0+00.00 TO 1+10.00
RAMP C STA 11+40.00 TO 12+46.80

MODEL: Typical Section-9 [Sheet]
FILE NAME: c:\pw_work\pwidot\nathaniel.morris@illinois.gov\d0985771\D978A80-StnD-Typicals.dgn

USER NAME = nathaniel.morris	DESIGNED -	REVISED -	STATE OF ILLINOIS DEPARTMENT OF TRANSPORTATION
	DRAWN -	REVISED -	
	CHECKED -	REVISED -	
PLOT DATE = 2/14/2025	DATE -	REVISED -	

TYPICAL SECTION 9

SCALE: | SHEET 19 OF 9 SHEETS | STA. | TO STA.

F.A.I RTE.	SECTION	COUNTY	TOTAL SHEETS	SHEET NO.
57	*	PULASKI	103	19
		CONTRACT NO. 78A80		
	ILLINOIS	FED. AID PROJECT		

77(1,1-1,1-2,1-3,2,2-1,3)RS-3;Bridge Repair 25-4

I-57
MAINLINE RESURFACING SCHEDULE

LOCATION STATION TO STATION			LENGTH (INFO ONLY)	ROADWAY WIDTH (INFO ONLY)	TEMP RAMP	HMA SUR. REMOVAL - BUTT JOINT *	HMA SUR. REMOVAL, 1 1/2"	HMA SUR. REMOVAL 3 1/4" *	HMA SUR. REMOVAL 3 3/4" *	HMA BINDER COURSE (1 1/2")	HMA SUR. COURSE (1 3/4")	HMA BINDER COURSE (2 1/4")	HMA SUR. COURSE (1 1/2")	BIT. MAT. (TACK COAT)	LONG. JOINT SEALANT	NOTES
FAI 57 (I-57/US 51)			FOOT	FOOT	SQ YD	SQ YD	SQ YD	SQ YD	SQ YD	TON	TON	TON	TON	LBS	FOOT	
SOUTHBOUND																
61+77.00	TO	66+47.82	470.82	24	51	51	642	971		7	8	149	99	848	471	
EQ STA 66+47.82 (BK) = STA 65+79.97 (AH)																
65+79.97	TO	80+45.02	1,465.05	24	37	37	2,903	1,590		39	45	436	291	2,638	1,465	
80+45.02	TO	82+00.35	GAP 077-0014													
82+00.35	TO	168+90.10	8,689.75	24	37	37	23,173					2,920	1,947	15,642	8,690	
168+90.10	TO	174+97.90	GAP 077-0008													
174+97.90	TO	200+40.65	2,542.75	24	37	37	6,781					855	570	4,577	2,543	
200+40.65	TO	202+22.48	GAP 077-0005													
202+22.48	TO	210+87.59	865.11	24	37	37	2,307					291	194	1,558	865	
210+87.59	TO	217+50.33	662.74													SEE RAMP SCHED (RAMP D)
217+50.33	TO	238+20.29	2,069.96	24			5,520					696	464	3,726	2,070	
238+20.29	TO	247+70.34	950.05													SEE RAMP SCHED (RAMP C)
247+70.34	TO	259+37.77	1,167.43	24			3,114					393	262	2,102	1,167	
EQ STA 259+37.77 (BK) = STA 259+39.47 (AH)																
259+39.47	TO	348+43.34	8,903.87	24			23,744					2,992	1,995	16,027	8,904	
EQ STA 348+43.34 (BK) = STA 348+44.35 (AH)																
348+44.35	TO	688+75.00	34,030.65	24	43	43	90,302		6,365			11,435	7,623	61,256	34,031	
I-57 SOUTHBOUND SUBTOTALS					242	242	158,486	2,561	6,365	46	53	20,167	13,445	108,374	60,205	
NORTHBOUND																
62+97.00	TO	66+27.18	330.18	24	51	51		1,395		7	8	104	74	595	330	
EQ STA 66+27.18 (BK) = STA 65+79.97 (AH)																
65+79.97	TO	81+11.34	1,531.37	24	37	37	3,080	1,590		39	45	476	344	2,757	1,531	
81+11.34	TO	82+66.97	GAP 077-0013													
82+66.97	TO	168+90.10	8,623.13	24	37	37	22,996					2,898	1,932	15,522	8,623	
168+90.10	TO	174+97.90	GAP 077-0007													
174+97.90	TO	200+21.51	2,523.61	24	37	37	6,730					848	566	4,543	2,524	
200+21.51	TO	202+03.34	GAP 077-0006													
202+03.34	TO	207+73.46	570.12	24	37	37	1,521					192	128	1,027	570	
207+73.46	TO	217+23.23	949.77													SEE RAMP SCHED (RAMP A)
217+23.23	TO	237+93.47	2,070.24	24			5,521					696	464	3,727	2,070	
237+93.47	TO	244+56.21	662.74													SEE RAMP SCHED (RAMP B)
244+56.21	TO	259+37.77	1,481.56	24			3,951					498	332	2,667	1,482	
EQ STA 259+37.77 (BK) = STA 259+39.47 (AH)																
259+39.47	TO	348+23.50	8,884.03	24			23,691					2,986	1,991	15,992	8,884	
EQ STA 348+23.50 (BK) = STA 348+44.35 (AH)																
348+44.35	TO	472+65.00	12,420.65	24	51	51	33,006		4,791			4,174	2,783	22,358	12,421	
I-57 NORTHBOUND SUBTOTALS					250	250	100,496	2,985	4,791	46	53	12,872	8,614	69,188	38,435	
I-57 MAINLINE RESURFACING TOTALS					492	492	258,982	5,546	11,156	92	106	33,039	22,059	177,562	98,640	

*INCLUDES SHOULDER HMA SURFACE REMOVAL QUANTITY

MODEL: Schedules 1 [Sheet]
FILE NAME: c:\pw_work\pwidot\nathaniel.morris@illinois.gov\d0985771\D978A80-Sht\E-Schedules.dgn

USER NAME = nathaniel.morris	DESIGNED -	REVISED -	
	DRAWN -	REVISED -	
	CHECKED -	REVISED -	
PLOT DATE = 2/14/2025	DATE -	REVISED -	

STATE OF ILLINOIS
DEPARTMENT OF TRANSPORTATION

SCHEDULES
MAINLINE RESURFACING

SCALE: SHEET 20 OF 6 SHEETS STA. TO STA.

F.A.I RTE.	SECTION	COUNTY	TOTAL SHEETS	SHEET NO.
57	*	PULASKI	103	20
		CONTRACT NO. 78A80		
		ILLINOIS FED. AID PROJECT		

77(1,1-1,1-2,1-3,2,2-1,3)RS-3;Bridge Repair 25-4

SHOULDER RESURFACING/RUMBLE STRIPS SCHEDULE

LOCATION STATION TO STATION			LENGTH	SHOULDER WIDTH HMA LT	SHOULDER WIDTH HMA RT	SHOULDER WIDTH AGG LT	SHOULDER WIDTH AGG RT	AVG. AGG SHLDR DEPTH	HMA SUR. REMOVAL 1 1/2"	HMA SHLDR, 3 1/4"	HMA SHLDR, 3 3/4"	AGG. WEDGE SHLDR, TYPE A	BIT. MAT. (TACK COAT)	SHLDR RUMBLE STRIPS, 16" LT	SHLDR RUMBLE STRIPS, 16" RT	NOTES
			FOR INFORMATIONAL PURPOSE ONLY													
FAI 57 (I-57)			FOOT	FOOT	FOOT	FOOT	FOOT	INCH	SQ YD	TON	TON	TON	POUND	FOOT	FOOT	
SOUTHBOUND																
61+77.00	TO	66+47.82	470.82	4	10	4	2	1.25	733		154	16	330	471	471	
EQ STA 66+47.82 (BK) = STA 65+79.97 (AH)																
65+79.97	TO	80+45.02	1,465.05	4	10	4	2	1.25	2,279	57	422	49	1,026	1,465	1,465	
80+45.02	TO	82+00.35	GAP 077-0014													
82+00.35	TO	168+90.10	8,689.75	4	10	4	2	1.25	13,518		2,839	289	6,083	8,690	8,690	
168+90.10	TO	174+97.90	GAP 077-0008													
174+97.90	TO	200+40.65	2,542.75	4	10	4	2	1.25	3,956		831	85	1,780	2,543	2,543	
200+40.65	TO	202+22.48	GAP 077-0005													
202+22.48	TO	210+87.59	865.11	4	10	4	2	1.25	1,346		283	29	606	865	865	
210+87.59	TO	216+50.33	562.74													SEE RAMP SCHED (RAMP C)
216+50.33	TO	240+20.27	2,369.94	4	10	4	2	1.25	3,687		775	79	1,659	2,370	2,370	
240+20.27	TO	247+70.34	750.07													SEE RAMP SCHED (RAMP D)
247+70.34	TO	259+37.77	1,167.43	4	10	4	2	1.25	1,817		382	39	818	1,167	1,167	
EQ STA 259+37.77 (BK) = STA 259+39.47 (AH)																
259+39.47	TO	348+43.34	8,903.87	4	10	4	2	1.25	13,851		2,909	296	6,233	8,904	8,904	
EQ STA 348+43.34 (BK) = STA 348+44.35 (AH)																
348+44.34	TO	472+00.00	12,355.66	4	10	4	2	1.25	19,220		4,037	411	8,649	12,356	12,356	
472+00.00	TO	688+75.00	21,675.00	4	10	4	2	1.25	33,717		7,081	720	15,173	21,675	21,675	
I-57 SOUTHBOUND SUBTOTALS									94,124	57	19,713	2,013	42,357	60,505	60,505	
NORTHBOUND																
62+97.00	TO	66+27.18	330.18	10	4	2	4	0.75	514		108	8	232	330	330	
EQ STA 66+27.18 (BK) = STA 65+79.97 (AH)																
65+79.97	TO	81+11.34	1,531.37	10	4	2	4	0.75	2,383	57	444	37	1,072	1,531	1,531	
81+11.34	TO	82+66.97	GAP 077-0013													
82+66.97	TO	168+90.10	8,623.13	10	4	2	4	0.75	13,414		2,817	205	6,037	8,623	8,623	
168+90.10	TO	174+97.90	GAP 077-0007													
173+43.75	TO	200+21.51	2,677.76	10	4	2	4	0.75	4,166		875	64	1,875	2,678	2,678	
200+21.51	TO	202+03.34	GAP 077 0006													
202+03.34	TO	207+73.46	570.12	10	4	2	4	0.75	887		187	14	400	570	570	
207+73.46	TO	215+23.53	750.07													SEE RAMP SCHED (RAMP A)
215+23.53	TO	239+26.03	2,402.50	10	4	2	4	0.75	3,738		785	58	1,682	2,403	2,403	
239+26.03	TO	244+56.21	530.18													SEE RAMP SCHED (RAMP B)
244+56.21	TO	259+37.77	1,481.56	10	4	2	4	0.75	2,305		484	36	1,038	1,482	1,482	
EQ STA 259+37.77 (BK) = STA 259+39.47 (BK)																
259+39.47	TO	348+23.50	8,884.03	10	4	2	4	0.75	13,820		2,903	211	6,219	8,884	8,884	
EQ STA 348+23.50 (BK) = STA 348+44.35 (AH)																
348+44.35	TO	472+65.00	12,420.65	10	4	2	4	0.75	19,322		4,058	295	8,695	12,421	12,421	
I-57 NORTHBOUND SUBTOTALS									60,549	57	12,661	928	27,250	38,921	38,921	
I-57 SHOULDER RESURFACING/RUMBLE STRIP TOTALS									154,673	114	32,374	2,941	69,607	99,427	99,427	
														198,853		

MODEL: Schedules 2 [Sheet]
FILE NAME: c:\pw_work\pwidot\hallsyatd\d398771\D978A80-Sht-Schedules.dgn

USER NAME = Brandy.Maes	DESIGNED -	REVISED -	STATE OF ILLINOIS DEPARTMENT OF TRANSPORTATION
	DRAWN -	REVISED -	
	CHECKED -	REVISED -	
PLOT DATE = 2/6/2025	DATE -	REVISED -	

SCHEDULES
SHOULDER RESURFACING

SCALE: | SHEET 21 OF 6 SHEETS | STA. | TO STA.

F.A.I RTE.	SECTION	COUNTY	TOTAL SHEETS	SHEET NO.
57	*	PULASKI	103	21

CONTRACT NO. 78A80

ILLINOIS | FED. AID PROJECT

77(1,1-1,1-2,1-3,2,2-1,3)RS-3;Bridge Repair 25-4

I-57
ULLIN INTERCHANGE RAMPS RESURFACING SCHEDULE

LOCATION STATION TO STATION				LENGTH (INFO ONLY)	ROADWAY WIDTH (INFO ONLY)	TEMP RAMP	HMA SUR. REMOVAL - BUTT JOINT	HMA SUR. REMOVAL 1 1/2"	HMA BINDER COURSE (2 1/4")	HMA SUR. COURSE (1 1/2")	HMA SHLDR	AGG. WEDGE SHLDR, TYPE A	BIT. MAT. (TACK COAT)	LONG. JOINT SEALANT	SHLDR RUMBLE STRIPS, 16" LT	SHLDR RUMBLE STRIPS, 16" RT
FAI 57 (I-57)				FOOT	FOOT	SQ YD	SQ YD	SQ YD	TON	TON	TON	TON	POUND	FOOT	FOOT	FOOT
RAMP D (SOUTHBOUND EXIT)																
I-57 SOUTHBOUND	210+87.59	TO	217+50.33													
MAINLINE	210+87.59	TO	217+50.33	662.74	24			2,799	223	149	93	7	1,326	663		663
RAMP TRANSITION	210+87.59	TO	217+50.33	662.74	VAR.			1,290	163	109	101	15	1,136			
RAMP	0+00.00	TO	4+75.00	475.00	16	24	94	1,478	107	71	199	11	855			
RAMP C (SOUTHBOUND ENTRANCE)																
I-57 SOUTHBOUND	238+20.29	TO	247+70.34													
MAINLINE	238+20.29	TO	247+70.34	950.05	24			4,012	320	213	134	10	1,901	950		950
RAMP TRANSITION	238+20.29	TO	247+70.34	950.05	VAR.			1,006	127	85	42	22	1,060			
RAMP	12+46.80	TO	10+65.00	182.00	16	24	94	567	41	28	100	5	328			
RAMP A (NORTHBOUND ENTRANCE)																
I-57 NORTHBOUND	207+73.46	TO	217+23.23													
MAINLINE	207+73.46	TO	217+23.23	949.77	24			4,011	320	213	133	10	1,900	950	950	
RAMP TRANSITION	207+73.46	TO	217+23.23	949.77	VAR.			1,005	127	85	154	22	1,059			
RAMP	12+46.80	TO	10+65.00	182.00	16	24	94	567	41	28	100	5	328			
RAMP B (NORTHBOUND EXIT)																
I-57 NORTHBOUND	237+93.47	TO	244+56.21													
MAINLINE	237+93.47	TO	244+56.21	662.74	24			2,799	223	149	93	7	1,392	663	663	
RAMP TRANSITION	237+93.47	TO	244+56.21	662.74	VAR.			1,290	163	109	45	15	1,004			
RAMP	0+00.00	TO	1+90.00	190.00	16	24	94	592	43	29	89	5	342			
I-57 RAMP SUBTOTALS						96	376	21,416	1,898	1,268	1,283	134	12,631	3,225	1,613	1,613

3,225

SUMMARY OF PAVEMENT CALCULATIONS FOR FAI 57

LOCATION	TEMP. RAMPS	HMA SUR. REMOVAL - BUTT JOINT	HMA SUR. REMOVAL, 1 1/2"	HMA SUR. REMOVAL, 3 1/4"	HMA SUR. REMOVAL, 3 3/4"	HMA BINDER COURSE (1 1/2")	HMA BINDER COURSE (2 1/4")	HMA SURF COURSE (1 1/2")	HMA SURF COURSE (1 3/4")	MATERIAL TRANSFER DEVICE	HMA SHLDR	AGG. WEDGE SHLDR, TYPE B	BIT. MAT. (TACK COAT)	LONG. JOINT SEALANT	SHLDR RUMBLE STRIPS, 16" LT	SHLDR RUMBLE STRIPS, 16" RT
	SQ YD	SQ YD	SQ YD	SQ YD	SQ YD	TON	TON	TON	TON	TON	TON	TON	POUND	FOOT	FOOT	FOOT
I-57 (FAI 57) MAINLINE	492	492	258,982	5,546	11,156	92	33,039	22,059	106	55,098			177,562	98,640		
I-57 (FAI 57) SHOULDERS			154,673								32,488	2,941	69,607		99,427	99,427
I-57 (FAI 57) RAMPS	96	376	21,416				1,898	1,268		3,166	1,283	134	12,631	3,225	1,613	1,613
I-57 PROJECT TOTALS	588	868	435,071	5,546	11,156	92	34,937	23,327	106	58,264	33,771	3,075	259,800	101,866	101,039	101,039
								23,433							202,079	

MODEL: Schedules 3 [Sheet]
FILE NAME: c:\pw_work\pwidot\halley\d0985771\D978A80-SheE-Schedules.dgn

USER NAME = Brandy.Maes	DESIGNED -	REVISED -	STATE OF ILLINOIS DEPARTMENT OF TRANSPORTATION
	DRAWN -	REVISED -	
	CHECKED -	REVISED -	
PLOT DATE = 2/6/2025	DATE -	REVISED -	

SCHEDULES
RAMP RESURFACING

SCALE: | SHEET 22 OF 6 SHEETS | STA. | TO STA.

F.A.I RTE.	SECTION	COUNTY	TOTAL SHEETS	SHEET NO.
57	*	PULASKI	103	22

CONTRACT NO. 78A80

ILLINOIS | FED. AID PROJECT

77(1,1-1,1-2,1-3,2,2-1,3)RS-3;Bridge Repair 25-4

I-57 PAVEMENT MARKING SCHEDULE

LOCATION STATION TO STATION *			LENGTH (INFO ONLY)	THERMOPLASTIC SKIP DASH WHITE 6" CENTER LINE	THERMOPLASTIC SOLID YELLOW 6" INSIDE EOP	THERMOPLASTIC SOLID WHITE 6" OUTSIDE EOP	THERMOPLASTIC SOLID WHITE 8" GORE	GROOVING FOR RECESSED PAVEMENT MARKING 7"	GROOVING FOR RECESSED PAVEMENT MARKING 9"	NOTES
FAI 57 (I-57)			FOOT	FOOT	FOOT	FOOT	FOOT	FOOT	FOOT	
SOUTHBOUND										
61+77.00	TO	66+47.82	471	118	471	471		1,060		
EQ STA 66+46.82 (BK) = STA 65+79.97 (AH)										
65+79.97	TO	80+45.02	1,466	367	1,466	1,466		3,299		
80+45.02	TO	82+00.35	GAP 077-0014							
82+00.35	TO	168+90.10	8,690	2,173	8,690	8,690		19,553		
168+90.10	TO	174+97.90	GAP 077-0008							
174+97.90	TO	200+40.65	2,543	636	2,543	2,543		5,722		
200+40.65	TO	202+22.48	GAP 077-0005							
202+22.48	TO	259+37.77	5,716	1,429	5,716	5,716		12,861		
EQ STA 259+37.77 (BK) = 259+39.47 (AH)										
259+39.47	TO	348+43.34	8,904	2,226	8,904	8,904		20,034		
EQ STA 348+43.34 (BK) = STA 348+44.35 (AH)										
348+44.35	TO	688+75.00	34,031	8,508	34,031	34,031		76,570		
RAMP D (SB EXIT)										
0+00.00	TO	4+75.00	475			475		475		Ramp Outside EOP
214+22.00	TO	217+14.50	293				560		560	Gore
RAMP C (SB ENTRANCE)										
11+40.00	TO	12+64.80	125			125		125		Ramp Outside EOP
236+85.00	TO	238+36.50	152				308		308	Gore
I-57 SOUTHBOUND SUBTOTALS				15,457	61,821	62,421	868	139,699	868	
NORTHBOUND										
62+97.00	TO	66+27.18	331	83	331	331		745		
EQ STA 66+27.18 (BK) = STA 65+79.97 (AH)										
65+79.97	TO	81+11.34	1,532	383	1,532	1,532		3,447		
81+11.34	TO	82+66.97	GAP 077-0013							
82+66.97	TO	168+90.10	8,624	2,156	8,624	8,624		19,404		
168+90.10	TO	174+97.90	GAP 077-0007							
174+97.90	TO	200+21.51	2,524	631	2,524	2,524		5,679		
200+21.51	TO	202+03.34	GAP 077-0006							
202+03.34	TO	259+37.77	5,735	1,434	5,735	5,735		12,904		
EQ STA 259+37.77 (BK) = STA 259+39.47 (AH)										
259+39.47	TO	348+23.50	8,885	2,222	8,885	8,885		19,992		
EQ STA 348+23.50 (BK) = STA 348+44.35 (AH)										
348+44.35	TO	472+65.00	12,421	3,106	12,421	12,421		27,948		
RAMP A (NB ENTRANCE)										
11+20.00	TO	12+46.80	127			127		127		Ramp Outside EOP
217+25.00	TO	218+32.50	108				178		178	Gore
RAMP B (NB EXIT)										
0+00	TO	1+10.00	110			110		110		Ramp Outside EOP
238+00.00	TO	241+65.00	365				736		736	Gore
I-57 NORTHBOUND SUBTOTALS				10,015	40,052	40,289	914	90,356	914	
I-57 TOTALS				25,472	101,873	102,710	1,782	230,055	1,782	
					230,055					

MODEL: Schedules 4 [Sheet]
FILE NAME: c:\pw_work\pwidot\olleyd\d0385771\D78A80-ShtE-Schedules.dgn

USER NAME = Brandy.Maes	DESIGNED -	REVISED -
	DRAWN -	REVISED -
	CHECKED -	REVISED -
PLOT DATE = 2/6/2025	DATE -	REVISED -

STATE OF ILLINOIS
DEPARTMENT OF TRANSPORTATION

SCHEDULES
PAVEMENT MARKING

SCALE: | SHEET 23 OF 6 SHEETS | STA. | TO STA.

F.A.I RTE.	SECTION	COUNTY	TOTAL SHEETS	SHEET NO.
57	*	PULASKI	103	23

CONTRACT NO. 78A80

ILLINOIS | FED. AID PROJECT

77(1,1-1,1-2,1-3,2,2-1,3)RS-3;Bridge Repair 25-4

I-57 PAVEMENT MARKING SCHEDULE - CONTINUED

LOCATION STATION TO STATION *			LENGTH (INFO ONLY)	TEMP PVMT MARKING, 6" PAINT	TEMP PVMT MARKING, 8" PAINT	TEMP PVMT MARKING REMOVAL - GRINDING	SHORT TERM PVMT MARKING, 6" SKIP DASH WHITE	DIAG. STRIPE YELLOW	DIAG. STRIPE WHITE	SHORT TERM PVMT MARKING REMOVAL	RAISED REFLECTIVE PVMT MARKER REMOVAL	ONE-WAY RAISED REFLECTIVE PVMT MARKERS		NOTES
							CENTER LINE	INSIDE EOP	OUTSIDE EOP			CRYSTAL	AMBER	
FAI 57 (I-57)			FOOT	FOOT	FOOT	SQ FT	FOOT	FOOT	FOOT	SQ FT	EACH	EACH	EACH	
SOUTHBOUND														
61+77.00	TO	66+47.82	471	1,060		530	95	38	38	86	6	6		
EQ STA 66+47.82 (BK) = STA 65+79.97 (AH)														
65+79.97	TO	80+45.02	1,466	3,299		1,650	294	118	118	265	19	19		
80+45.02	TO	82+00.35	GAP 077-0014											
82+00.35	TO	168+90.10	8,690	19,553		9,777	1,738	696	696	1,565	109	109		
168+90.10	TO	174+97.90	GAP 077-0008											
174+97.90	TO	200+40.65	2,543	5,722		2,861	509	204	204	459	32	32		
200+40.65	TO	202+22.48	GAP 077-0005											
202+22.48	TO	259+37.77	5,716	12,861		6,431	1,144	458	458	1,030	72	72		
EQ STA 259+37.77 (BK) = STA 259+39.47 (AH)														
259+39.47	TO	348+43.34	8,904	20,034		10,017	1,781	713	713	1,604	112	112		
EQ STA 348+43.34 (BK) = STA 348+44.35 (AH)														
348+44.35	TO	688+75.00	34,031	76,570		38,285	6,807	2,723	2,723	6,127	426	426		
RAMP D (SB EXIT)														
0+00	TO	4+75.00	475	475		238		38	38	38	39	34	5	
214+22.00	TO	217+14.50	293		560	280					18	18		
RAMP C (SB ENTRANCE)														
11+40.00	TO	12+64.80	125	125		63		10	10	10				
236+85.00	TO	238+36.50	152		308	154								
I-57 SOUTHBOUND SUBTOTALS				139,699	868	70,286	12,368	4,998	4,998	11,184	833	828	5	
NORTHBOUND														
62+97.00	TO	66+27.18	331	745		373	67	27	27	61	5	5		
EQ STA 66+27.18 (BK) = STA 65+79.97 (AH)														
65+79.97	TO	81+11.34	1,532	3,447		1,724	307	123	123	277	20	20		
81+11.34	TO	82+66.97	GAP 077-0013											
82+66.97	TO	168+90.10	8,624	19,404		9,702	1,725	690	690	1,553	108	108		
168+90.10	TO	174+97.90	GAP 077-0007											
174+97.90	TO	200+21.51	2,524	5,679		2,840	505	202	202	455	32	32		
200+21.51	TO	202+03.34	GAP 077-0006											
202+03.34	TO	259+37.77	5,735	12,904		6,452	1,147	459	459	1,033	72	72		
EQ STA 259+37.77 (BK) = STA 259+39.47 (AH)														
259+39.47	TO	348+23.50	8,885	19,992		9,996	1,777	711	711	1,600	112	112		
EQ STA 348+23.50 (BK) = STA 348+44.35 (AH)														
348+44.35	TO	472+65.00	12,421	27,948		13,974	2,485	994	994	2,237	156	156		
RAMP A (NB ENTRANCE)														
11+20.00	TO	12+46.80	127	127		64		11	11	11				
217+25.00	TO	218+32.50	108		178	89								
RAMP B (NB EXIT)														
0+00	TO	1+10.00	110	110		55		9	9	9	45	33	12	
238+00.00	TO	241+65.00	365		736	368					22	22		
I-57 NORTHBOUND SUBTOTALS				90,356	914	45,637	8,013	3,226	3,226	7,236	572	560	12	
I-57 TOTALS				230,055	1,782	115,923	20,381	8,224	8,224	18,420	1,405	1,388	17	
							36,829					1,405		

MODEL: Schedules 5 [Sheet]
FILE NAME: c:\pw_work\pwidot\olleyd\d0385771\D78A80-Sht5-Schedules.dgn

USER NAME = Brandy.Maes	DESIGNED -	REVISED -	STATE OF ILLINOIS DEPARTMENT OF TRANSPORTATION
	DRAWN -	REVISED -	
	CHECKED -	REVISED -	
PLOT DATE = 2/6/2025	DATE -	REVISED -	

SCHEDULES
PAVEMENT MARKING CONTINUED

SCALE: | SHEET 24 OF 6 SHEETS | STA. | TO STA.

F.A.I RTE.	SECTION	COUNTY	TOTAL SHEETS	SHEET NO.
57	*	PULASKI	103	24
		CONTRACT NO. 78A80		
	ILLINOIS	FED. AID PROJECT		

77(1,1-1,1-2,1-3,2,2-1,3)RS-3;Bridge Repair 25-4

I-57 UNDERDRAIN CLEANING SCHEDULE

LOCATION STATION TO STATION			RODENT SHIELDS	THERMOPLASTIC PAVEMENT MARKING - LETTERS & SYMBOLS	GROOVING FOR RECESSED PAVEMENT MARKING - LETTERS & SYMBOLS
FAI 57 (I-57/US 51)			EACH	SQ FT	SQ FT
SOUTHBOUND					
65+00.00	TO	80+45.00	9	18	39
82+01.00	TO	145+88.00	32	64	139
146+23.00	TO	152+62.00	4	8	17
154+32.00	TO	170+44.00	6	12	26
173+43.00	TO	200+75.00	16	32	69
201+75.00	TO	211+75.00	12	24	52
211+75.00	TO	246+00.00	14	28	61
246+00.00	TO	271+00.00	12	24	52
271+00.00	TO	294+00.00	10	20	43
294+00.00	TO	319+00.00	10	20	43
319+00.00	TO	344+00.00	10	20	43
344+00.00	TO	369+00.00	10	20	43
369+00.00	TO	394+00.00	10	20	43
394+00.00	TO	418+00.00	10	20	43
418+00.00	TO	443+00.00	10	20	43
443+00.00	TO	470+16.00	10	20	43
470+16.00	TO	497+50.00	14	28	61
497+50.00	TO	521+50.00	10	20	43
521+50.00	TO	546+50.00	10	20	43
546+50.00	TO	572+50.00	10	20	43
572+50.00	TO	597+50.00	10	20	43
597+50.00	TO	622+00.00	10	20	43
622+00.00	TO	650+00.00	12	24	52
650+00.00	TO	675+00.00	10	20	43
675+00.00	TO	688+75.00	6	12	26
I-57 SOUTHBOUND SUBTOTALS			277	554	1,202

LOCATION STATION TO STATION			RODENT SHIELDS	THERMOPLASTIC PAVEMENT MARKING - LETTERS & SYMBOLS	GROOVING FOR RECESSED PAVEMENT MARKING - LETTERS & SYMBOLS
FAI 57 (I-57/US 51)			EACH	SQ FT	SQ FT
NORTHBOUND					
65+00.00	TO	81+11.00	9	18	39
82+67.00	TO	145+61.00	32	64	139
145+96.00	TO	152+20.00	4	8	17
153+91.00	TO	170+44.00	6	12	26
173+43.00	TO	200+55.00	16	32	69
201+75.00	TO	211+75.00	12	24	52
211+75.00	TO	246+00.00	14	28	61
246+00.00	TO	271+00.00	12	24	52
271+00.00	TO	294+00.00	10	20	43
294+00.00	TO	319+00.00	10	20	43
319+00.00	TO	344+00.00	10	20	43
344+00.00	TO	369+00.00	10	20	43
369+00.00	TO	394+00.00	10	20	43
394+00.00	TO	418+00.00	10	20	43
418+00.00	TO	443+00.00	10	20	43
443+00.00	TO	470+16.00	10	20	43
I-57 NORTHBOUND SUBTOTALS			185	370	803
I-57 MAINLINE TOTALS			462	924	2,005

MODEL: Schedules 6 [Sheet]
FILE NAME: c:\pw_work\pwidot\nathaniel.morris@illinois.gov\d0985771\D978A80-ShtE-Schedules.dgn

USER NAME = nathaniel.morris	DESIGNED -	REVISED -	STATE OF ILLINOIS DEPARTMENT OF TRANSPORTATION
	DRAWN -	REVISED -	
	CHECKED -	REVISED -	
PLOT DATE = 2/14/2025	DATE -	REVISED -	

SCHEDULES
UNDERDRAIN CLEANING

SCALE: SHEET 25 OF 6 SHEETS STA. TO STA.

F.A.I RTE.	SECTION	COUNTY	TOTAL SHEETS	SHEET NO.
57	*	PULASKI	103	25
		CONTRACT NO. 78A80		
		ILLINOIS FED. AID PROJECT		

77(1,1-1,1-2,1-3,2,2-1,3)RS-3;Bridge Repair 25-4

CLASS B PATCHES, 16"

Lane	MM	Patch	Width	Length	TY II	TY III	TY IV	Saw Cuts	Dowel Bars	Tie Bars
		#	(ft)	(ft)	(sy)	(sy)	(sy)	(ft)	(ea)	(ea)
SB	20.8	1	12.0	6.0	8.0			48	20	0
SB	20.0	2	12.0	6.0	8.0			48	20	0
SB	20.0	3	12.0	6.0	8.0			48	20	0
SB	20.0	4	12.0	20.0			26.7	76	20	0
SB	20.0	5	12.0	6.0	8.0			48	20	0
SB	20.0	6	12.0	6.0	8.0			48	20	0
SB	20.0	7	12.0	6.0	8.0			48	20	0
SB	20.0	8	12.0	6.0	8.0			48	20	0
SB	20.0	9	12.0	6.0	8.0			48	20	0
SB	20.0	10	12.0	6.0	8.0			48	20	0
SB	20.0	11	12.0	6.0	8.0			48	20	0
SB	20.0	12	12.0	6.0	8.0			48	20	0
SB	20.0	13	12.0	6.0	8.0			48	20	0
SB	20.0	14	12.0	6.0	8.0			48	20	0
SB	20.0	15	12.0	6.0	8.0			48	20	0
SB	20.0	16	12.0	6.0	8.0			48	20	0
SB	20.0	17	12.0	6.0	8.0			48	20	0
SB	19.9	18	12.0	6.0	8.0			48	20	0
SB	19.9	19	12.0	6.0	8.0			48	20	0
SB	19.9	20	12.0	6.0	8.0			48	20	0
SB	19.9	21	12.0	6.0	8.0			48	20	0
SB	19.9	22	12.0	20.0			26.7	76	20	0
SB	19.9	23	12.0	20.0			26.7	76	20	0
SB	19.9	24	12.0	6.0	8.0			48	20	0
SB	19.9	25	12.0	6.0	8.0			48	20	0
SB	19.9	26	12.0	15.0		20.0		66	20	0
SB	19.9	27	12.0	15.0		20.0		66	20	0
SB	19.9	28	12.0	6.0	8.0			48	20	0
SB	19.9	29	12.0	6.0	8.0			48	20	0
SB	19.9	30	12.0	6.0	8.0			48	20	0
SB	19.9	31	12.0	6.0	8.0			48	20	0
SB	19.9	32	12.0	6.0	8.0			48	20	0
SB	19.9	33	12.0	6.0	8.0			48	20	0
SB	19.9	34	12.0	6.0	8.0			48	20	0
SB	19.9	35	12.0	15.0		20.0		66	20	0
SB	19.9	36	12.0	15.0		20.0		66	20	0
SB	19.9	37	12.0	6.0	8.0			48	20	0
SB	19.8	38	12.0	6.0	8.0			48	20	0
SB	19.8	39	12.0	6.0	8.0			48	20	0
SB	19.8	40	12.0	6.0	8.0			48	20	0
SB	19.8	41	12.0	6.0	8.0			48	20	0
SB	19.8	42	12.0	6.0	8.0			48	20	0
SB	19.8	43	12.0	6.0	8.0			48	20	0
SB	19.8	44	12.0	6.0	8.0			48	20	0
SB	19.8	45	12.0	6.0	8.0			48	20	0
SB	19.7	46	12.0	6.0	8.0			48	20	0
SB	19.7	47	12.0	6.0	8.0			48	20	0
SB	19.5	48	12.0	6.0	8.0			48	20	0
SB	19.5	49	12.0	20.0			26.7	76	20	0
SB	19.5	50	12.0	6.0	8.0			48	20	0
SB	18.8	51	12.0	6.0	8.0			48	20	0
SB	18.8	52	12.0	6.0	8.0			48	20	0
SB	18.8	53	12.0	6.0	8.0			48	20	0
SB	18.8	54	12.0	6.0	8.0			48	20	0

CLASS B PATCHES, 16" CONT.

Lane	MM	Patch	Width	Length	TY II	TY III	TY IV	Saw Cuts	Dowel Bars	Tie Bars
		#	(ft)	(ft)	(sy)	(sy)	(sy)	(ft)	(ea)	(ea)
SB	18.8	55	12.0	6.0	8.0			48	20	0
SB	18.8	56	12.0	6.0	8.0			48	20	0
SB	18.8	57	12.0	6.0	8.0			48	20	0
SB	18.8	58	12.0	12.0		16.0		60	20	0
SB	18.8	59	12.0	12.0		16.0		60	20	0
SB	18.8	60	12.0	12.0		16.0		60	20	0
SB	17.8	75	12.0	20.0			26.7	76	20	0
SB	17.8	76	12.0	20.0			26.7	76	20	0
SB	17.8	77	12.0	6.0	8.0			48	20	0
SB	16.5	78	12.0	6.0	8.0			48	20	0
SB	16.5	79	12.0	6.0	8.0			48	20	0
SB	16.5	80	12.0	6.0	8.0			48	20	0
SB	16.0	81	12.0	12.0		16.0		60	20	0
SB	16.0	82	12.0	12.0		16.0		60	20	0
SB	16.0	83	12.0	6.0	8.0			48	20	0
SB	16.0	84	12.0	6.0	8.0			48	20	0
SB	16.0	85	12.0	6.0	8.0			48	20	0
SB	15.4	86	12.0	6.0	8.0			48	20	0
SB	15.4	87	12.0	25.0			33.3	86	20	8.3333
SB	15.4	88	12.0	25.0			33.3	86	20	8.3333
SB	15.4	89	12.0	25.0			33.3	86	20	8.3333
SB	15.4	90	12.0	25.0			33.3	86	20	8.3333
SB	14.0	91	12.0	20.0			26.7	76	20	0
SB	14.0	92	12.0	20.0			26.7	76	20	0
SB	14.0	93	12.0	15.0		20.0		66	20	0
SB	14.0	94	12.0	15.0		20.0		66	20	0
SB	14.0	95	12.0	6.0	8.0			48	20	0
SB	13.2	96	12.0	6.0	8.0			48	20	0
SB	13.2	97	12.0	10.0	13.3			56	20	0
SB	13.2	98	12.0	10.0	13.3			56	20	0
				Totals	499	200	347	4592	1680	33

CLASS A PATCHES, 14"

Lane	MM	Patch	Width	Length	TY II	TY III	Saw Cuts
		#	(ft)	(ft)	(sy)	(sy)	(ft)
SB	18.5	61	12.0	12.0		16.0	60
SB	18.5	62	12.0	10.0	13.3		56
SB	18.4	63	12.0	10.0	13.3		56
SB	18.4	64	12.0	8.0	10.7		52
SB	18.4	65	12.0	8.0	10.7		52
SB	18.0	66	12.0	8.0	10.7		52
SB	18.0	67	12.0	8.0	10.7		52
SB	18.0	68	12.0	6.0	8.0		48
SB	18.0	69	12.0	6.0	8.0		48
SB	18.0	70	12.0	6.0	8.0		48
SB	18.2	71	12.0	6.0	8.0		48
SB	18.2	72	12.0	6.0	8.0		48
SB	18.2	73	12.0	6.0	8.0		48
SB	18.2	74	12.0	6.0	8.0		48
				Totals	125	16	716

MODEL: Schedules 7 [Sheet]
FILE NAME: c:\pw_work\pwidot\nathaniel.morris\d0985771\D978A80-SheetFiles.dgn

USER NAME = nathaniel.morris	DESIGNED -	REVISED -	STATE OF ILLINOIS DEPARTMENT OF TRANSPORTATION
	DRAWN -	REVISED -	
	CHECKED -	REVISED -	
PLOT DATE = 2/20/2025	DATE -	REVISED -	

PATCHING SCHEDULES

SCALE: | SHEET 000 OF SHEETS | STA. | TO STA.

F.A.I. RTE.	SECTION	COUNTY	TOTAL SHEETS	SHEET NO.
57	*	PULASKI	103	25A

CONTRACT NO. 78A80

ILLINOIS | FED. AID PROJECT

77(1,1-1,1-2,1-3,2,2-1,3)RS-3;Bridge Repair 25-4

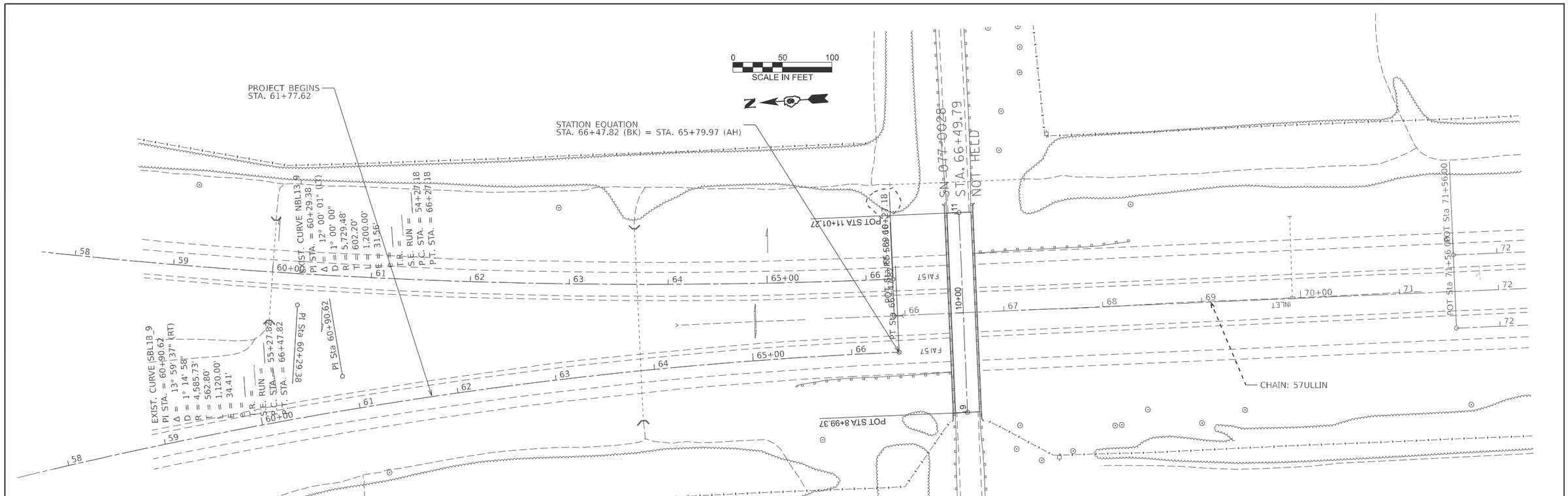

THIS SPACE INTENTIONALLY LEFT BLANK

MODEL: Unnamed Plan - Plan 1 [Sheet]
FILE NAME: c:\pw_work\pwidot\alleyd\d0385771\D78A80-ShtF-Plan Sheets.dgn

USER NAME = Brandy.Maes	DESIGNED -	REVISED -	STATE OF ILLINOIS DEPARTMENT OF TRANSPORTATION
	DRAWN -	REVISED -	
	CHECKED -	REVISED -	
PLOT DATE = 2/6/2025	DATE -	REVISED -	

I-57 PLAN

SCALE: 1"=50' | SHEET 26 OF 30 SHEETS | STA. 57+65.9469 TO STA. 72+65.9469

F.A.I RTE.	SECTION	COUNTY	TOTAL SHEETS	SHEET NO.
57	*	PULASKI	103	26
		CONTRACT NO. 78A80		
	ILLINOIS	FED. AID PROJECT		

77(1,1-1,1-2,1-3,2,2-1,3)RS-3;Bridge Repair 25-4

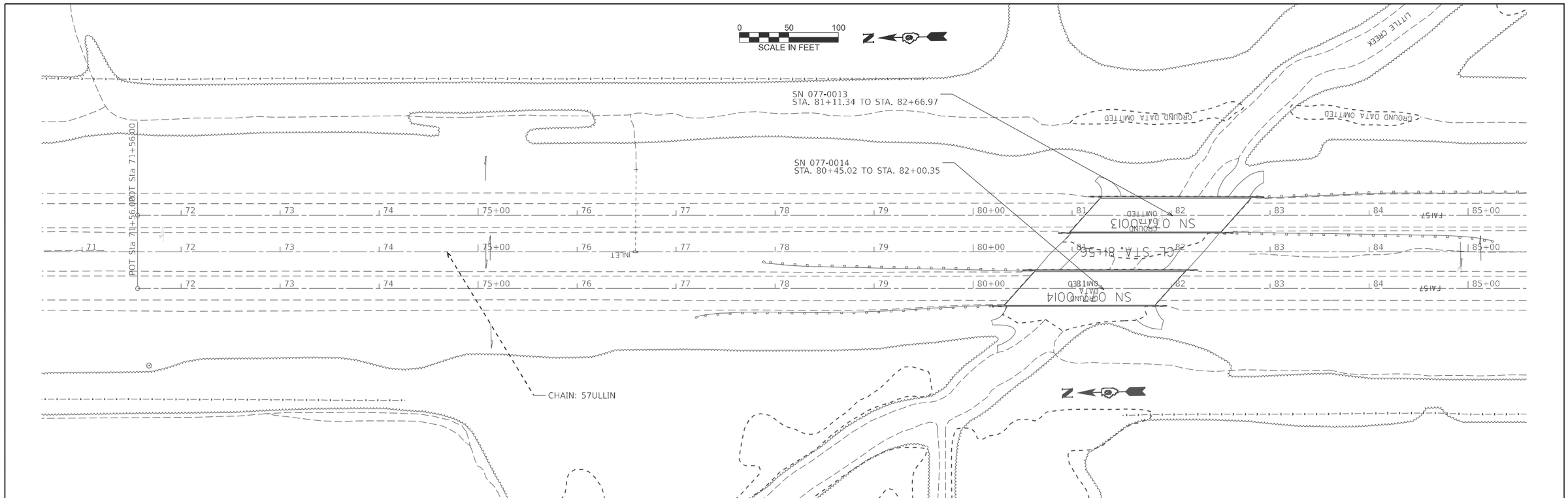

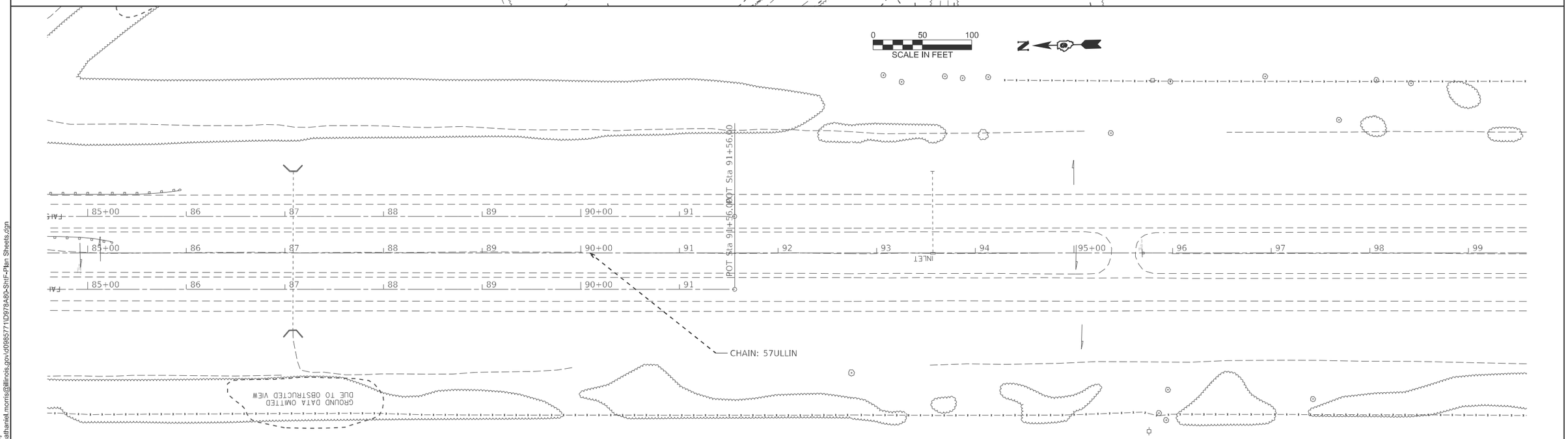

MODEL: 57ULLIN - Plan 2 [Sheet]
FILE NAME: c:\pw_work\pwidot\nathaniel.morris@illinois.gov\d0985771\D978A80-Sht5-Plan Sheets.dgn

USER NAME = Brandy.Maes	DESIGNED -	REVISED -	
	DRAWN -	REVISED -	
	CHECKED -	REVISED -	
PLOT DATE = 2/6/2025	DATE -	REVISED -	

STATE OF ILLINOIS
DEPARTMENT OF TRANSPORTATION

I-57 PLAN

SCALE: 1"=50' | SHEET 27 OF 30 SHEETS | STA. 71+00.00 TO STA. 99+00.00

F.A.I RTE.	SECTION	COUNTY	TOTAL SHEETS	SHEET NO.
57	*	PULASKI	103	27

CONTRACT NO. 78A80

ILLINOIS | FED. AID PROJECT

77(1,1-1,1-2,1-3,2,2-1,3)RS-3;Bridge Repair 25-4

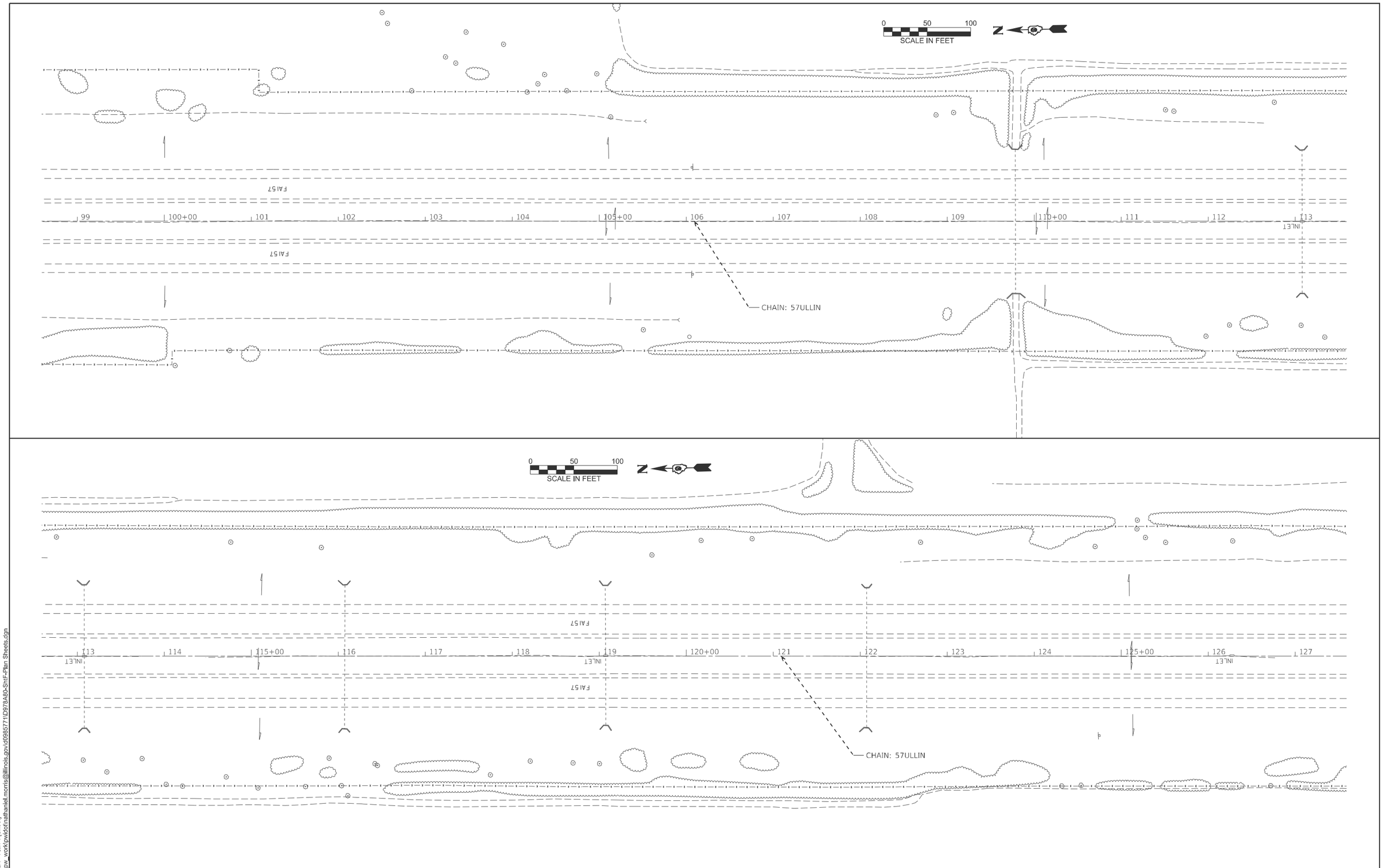

MODEL: 57ULLIN - Plan 4 [Sheet]
FILE NAME: c:\pw_work\pwidot\nathaniel.morris@illinois.gov\d0985771\D978A80-ShtF-Plan Sheets.dgn

USER NAME = Brandy.Maes	DESIGNED -	REVISED -	
	DRAWN -	REVISED -	
	CHECKED -	REVISED -	
PLOT DATE = 2/6/2025	DATE -	REVISED -	

STATE OF ILLINOIS
DEPARTMENT OF TRANSPORTATION

I-57 PLAN

SCALE: 1"=50' | SHEET 28 OF 30 SHEETS | STA. 99+00.00 TO STA. 127+00.00

F.A.I RTE.	SECTION	COUNTY	TOTAL SHEETS	SHEET NO.
57	*	PULASKI	103	28

CONTRACT NO. 78A80

ILLINOIS | FED. AID PROJECT

77(1,1-1,1-2,1-3,2,2-1,3)RS-3;Bridge Repair 25-4

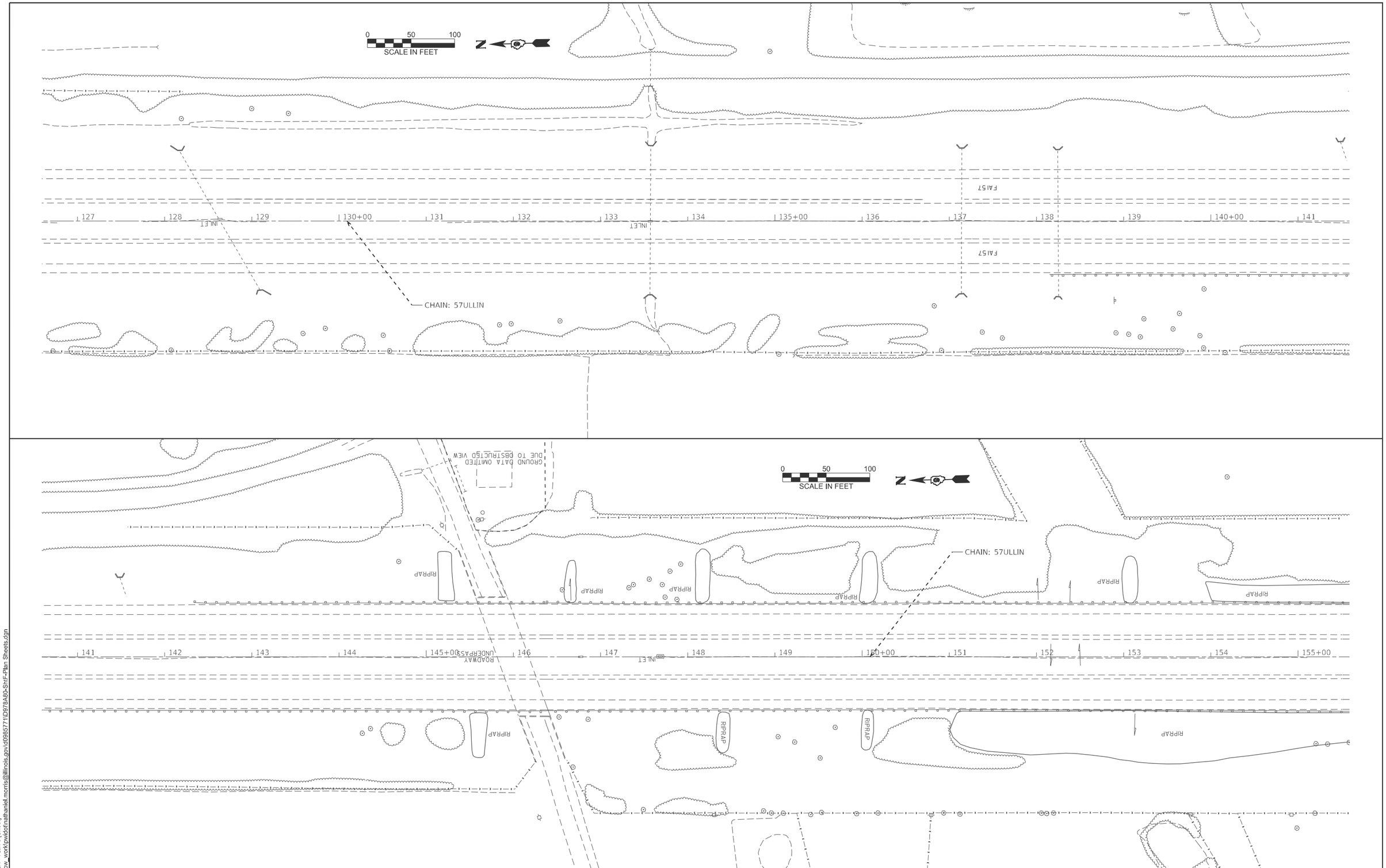

MODEL: 57ULLIN - Plan 6 [Sheet]
FILE NAME: c:\pw_work\pwidot\nathaniel.morris@illinois.gov\d0985771\D978A80-Shf-Plan Sheets.dgn

USER NAME = nathaniel.morris	DESIGNED -	REVISED -	
	DRAWN -	REVISED -	
	CHECKED -	REVISED -	
PLOT DATE = 2/11/2025	DATE -	REVISED -	

STATE OF ILLINOIS
DEPARTMENT OF TRANSPORTATION

I-57 PLAN

SCALE: 1"=50' | SHEET 29 OF 30 SHEETS | STA. 127+00.00 TO STA. 155+00.00

F.A.I RTE.	SECTION	COUNTY	TOTAL SHEETS	SHEET NO.
57	*	PULASKI	103	29
		CONTRACT NO. 78A80		
	ILLINOIS	FED. AID PROJECT		

77(1,1-1,1-2,1-3,2,2-1,3)RS-3;Bridge Repair 25-4

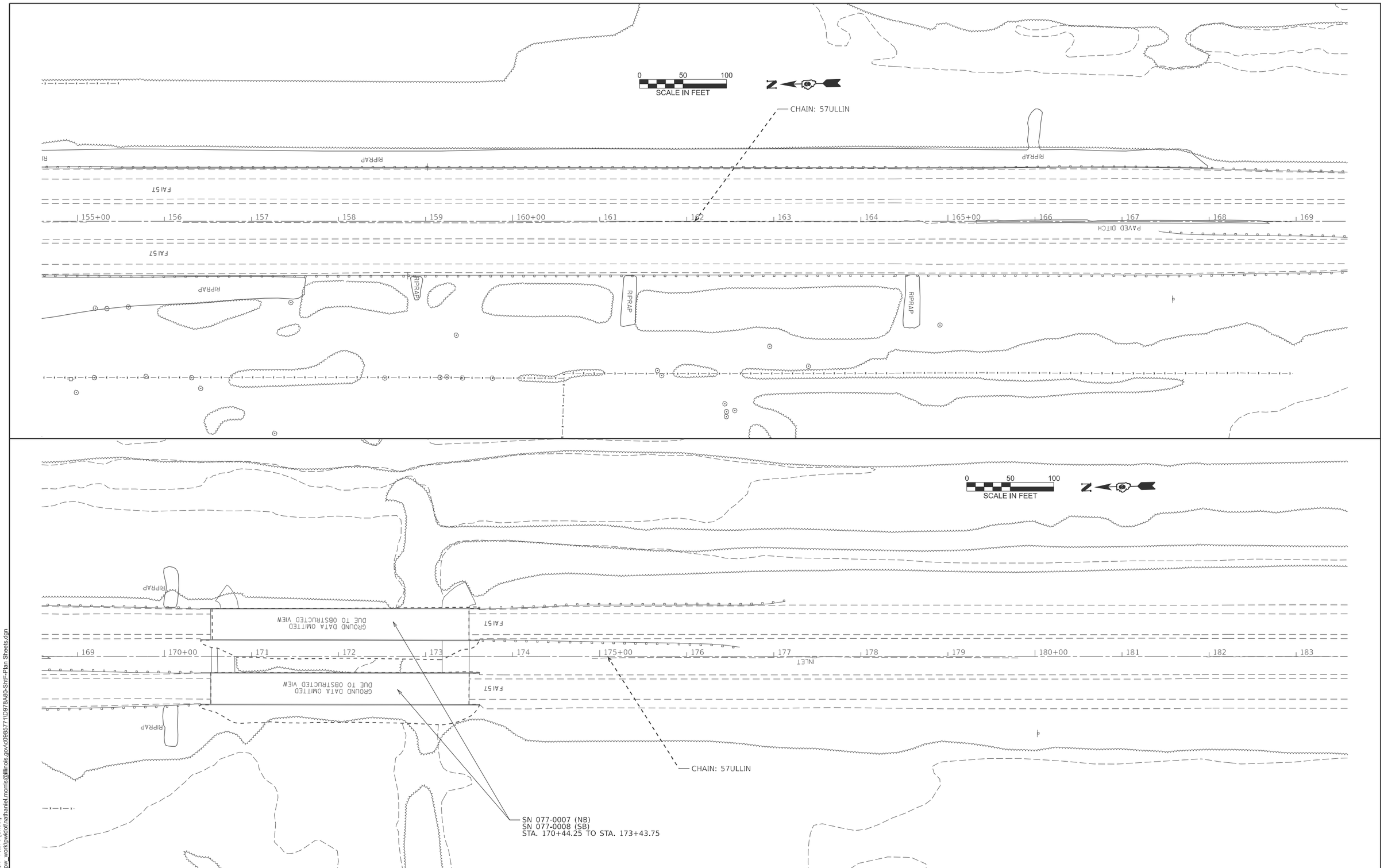

MODEL: 57ULLIN - Plan 8 [Sheet]
FILE NAME: c:\pw_work\pwidot\nathaniel.morris@illinois.gov\d0985771\D978A80-Sht-Plan Sheets.dgn

USER NAME = nathaniel.morris	DESIGNED -	REVISED -	
	DRAWN -	REVISED -	
	CHECKED -	REVISED -	
PLOT DATE = 2/11/2025	DATE -	REVISED -	

STATE OF ILLINOIS
DEPARTMENT OF TRANSPORTATION

I-57 PLAN

SCALE: 1"=50' | SHEET 30 OF 30 SHEETS | STA. 155+00.00 TO STA. 183+00.00

F.A.I RTE.	SECTION	COUNTY	TOTAL SHEETS	SHEET NO.
57	*	PULASKI	103	30

CONTRACT NO. 78A80

ILLINOIS | FED. AID PROJECT

77(1,1-1,1-2,1-3,2,2-1,3)RS-3;Bridge Repair 25-4

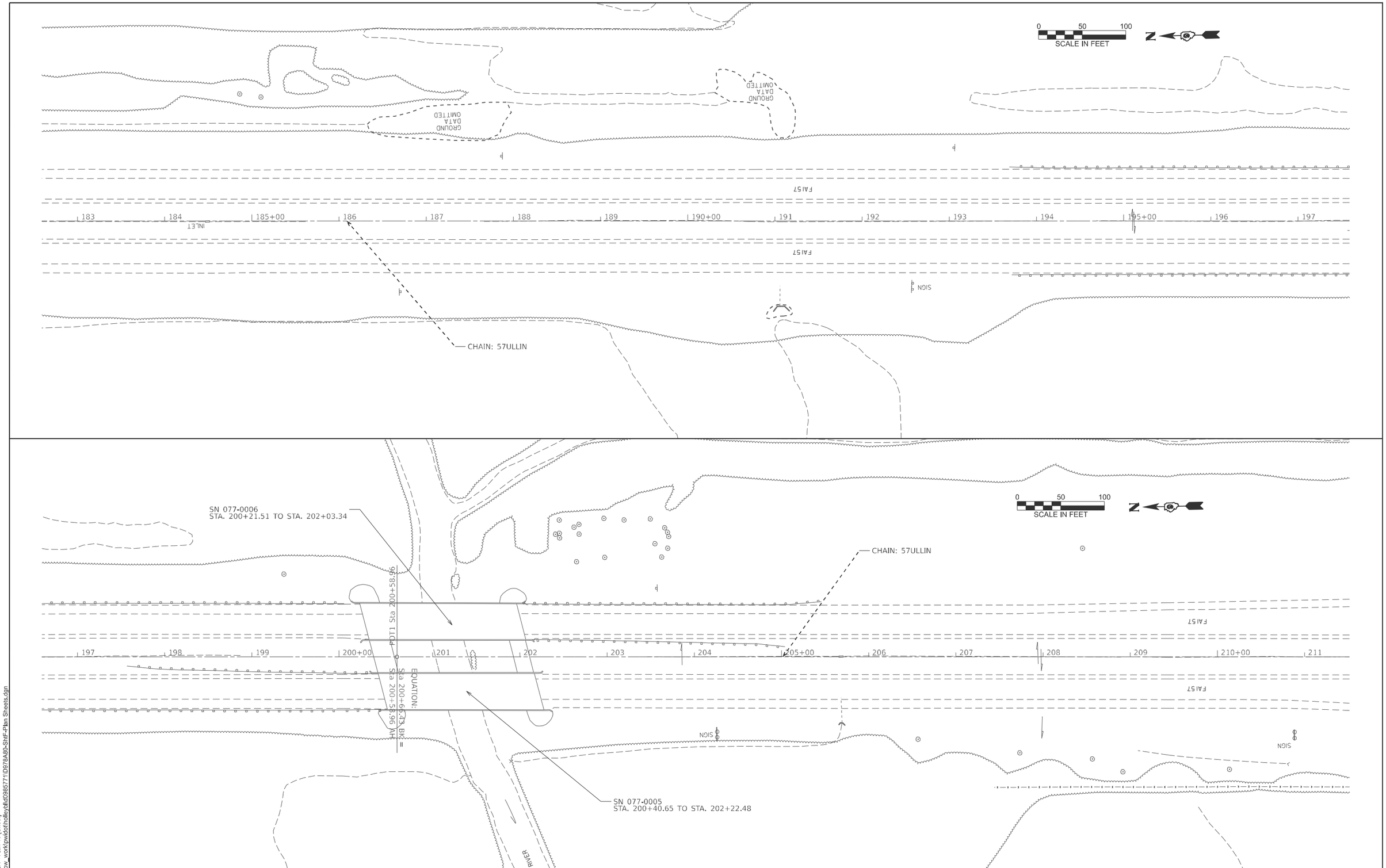

MODEL: 57ULLIN - Plan 10 [Sheet]
FILE NAME: c:\pw_work\pwidot\holleyd\d0985771\D978A80-ShtF-Plan Sheets.dgn

USER NAME = Brandy.Maes	DESIGNED -	REVISED -	
	DRAWN -	REVISED -	
	CHECKED -	REVISED -	
PLOT DATE = 2/6/2025	DATE -	REVISED -	

STATE OF ILLINOIS
DEPARTMENT OF TRANSPORTATION

I-57 PLAN

SCALE: 1"=50' | SHEET 31 OF 30 SHEETS | STA. 183+00.00 TO STA. 211+00.00

F.A.I RTE.	SECTION	COUNTY	TOTAL SHEETS	SHEET NO.
57	*	PULASKI	103	31
		CONTRACT NO. 78A80		
		ILLINOIS FED. AID PROJECT		

77(1,1-1,1-2,1-3,2,2-1,3)RS-3;Bridge Repair 25-4

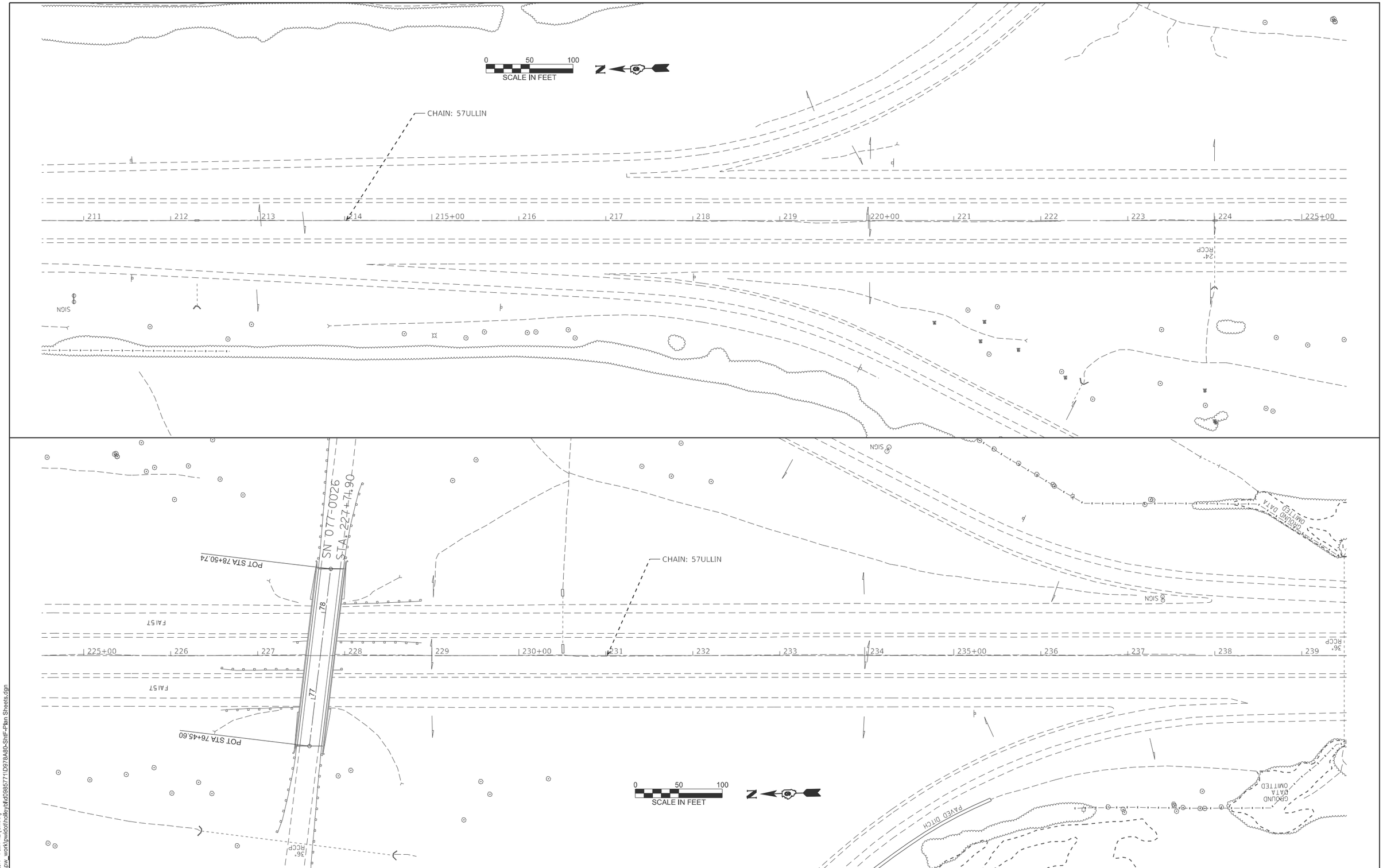

MODEL: 57ULLIN - Plan 12 [Sheet]
FILE NAME: c:\pw_work\pwidot\hilleyd\d0385771\D978A80-Sht-Plan Sheets.dgn

USER NAME = Brandy.Maes	DESIGNED -	REVISED -	
	DRAWN -	REVISED -	
	CHECKED -	REVISED -	
PLOT DATE = 2/6/2025	DATE -	REVISED -	

STATE OF ILLINOIS
DEPARTMENT OF TRANSPORTATION

I-57 PLAN

SCALE: 1"=50' | SHEET 32 OF 30 SHEETS | STA. 211+00.00 TO STA. 239+00.00

F.A.I RTE.	SECTION	COUNTY	TOTAL SHEETS	SHEET NO.
57	*	PULASKI	103	32

CONTRACT NO. 78A80

ILLINOIS | FED. AID PROJECT

77(1,1-1,1-2,1-3,2,2-1,3)RS-3;Bridge Repair 25-4

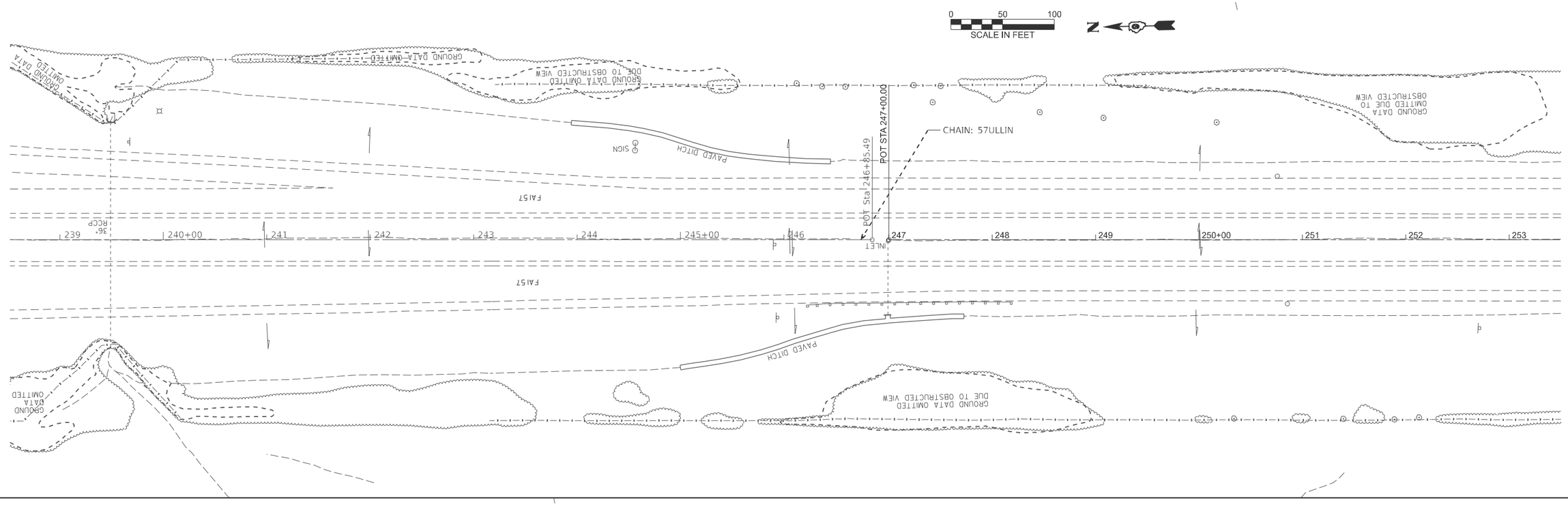

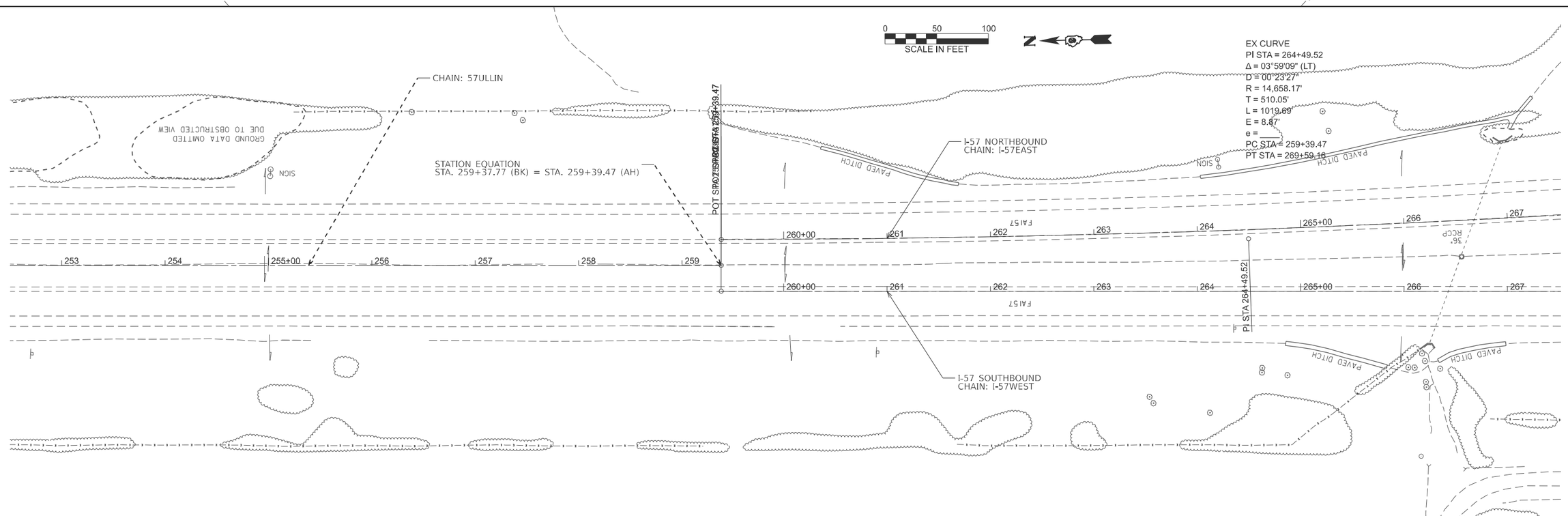

MODEL: 57ULLIN - Plan 14 [Sheet]
FILE NAME: c:\pw_work\pwidot\holleyd\d0985771\D978A80-ShtF-Plan Sheets.dgn

USER NAME = Brandy.Maes	DESIGNED -	REVISED -	
	DRAWN -	REVISED -	
	CHECKED -	REVISED -	
PLOT DATE = 2/6/2025	DATE -	REVISED -	

STATE OF ILLINOIS
DEPARTMENT OF TRANSPORTATION

I-57 PLAN

SCALE: 1"=50' | SHEET 33 OF 30 SHEETS | STA. 239+00.00 TO STA. 267+00.00

F.A.I RTE.	SECTION	COUNTY	TOTAL SHEETS	SHEET NO.
57	*	PULASKI	103	33

CONTRACT NO. 78A80

ILLINOIS | FED. AID PROJECT

77(1,1-1,1-2,1-3,2,2-1,3)RS-3;Bridge Repair 25-4

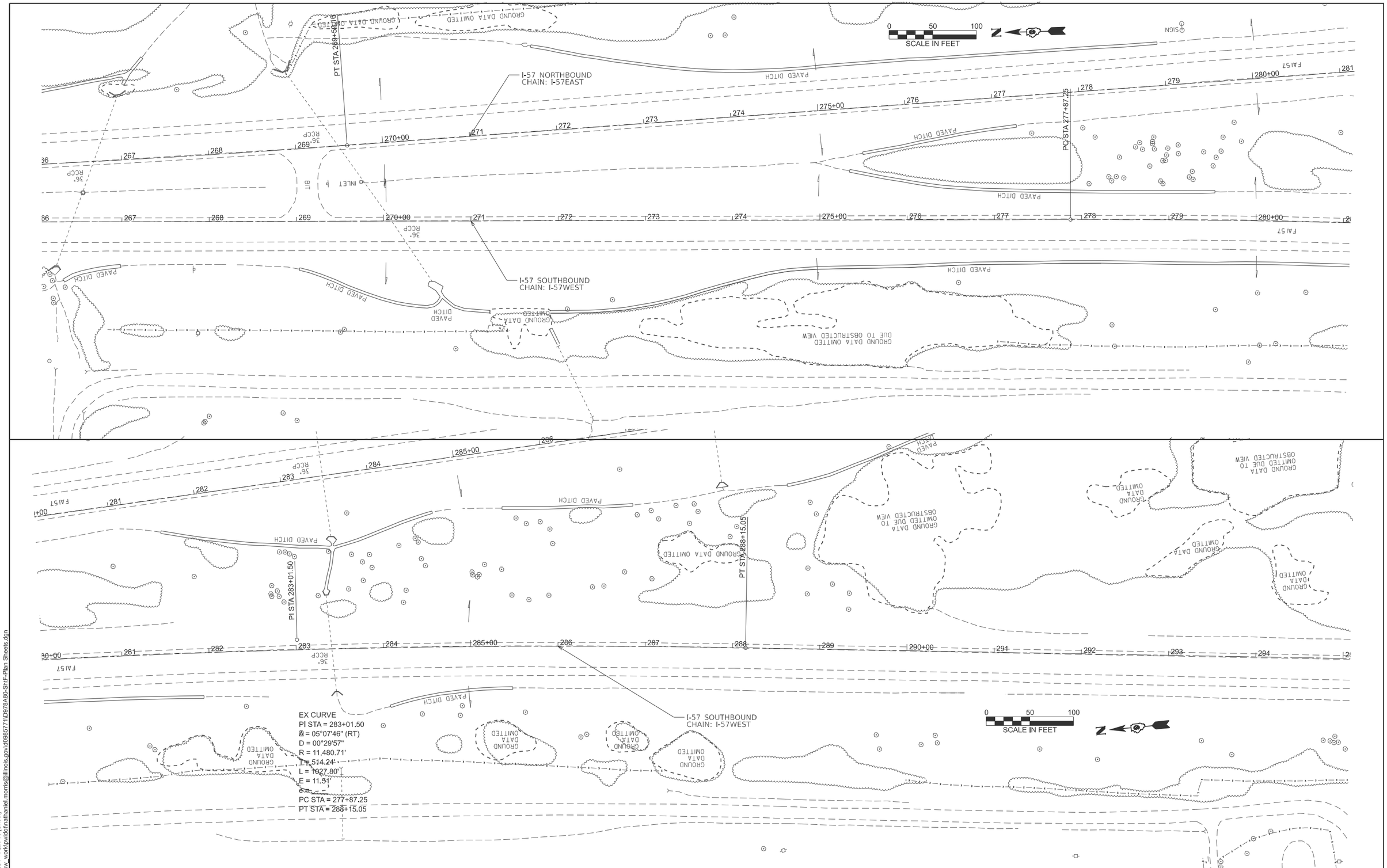

MODEL: I-57WEST - Plan 16 [Sheet]
FILE NAME: c:\pw_work\pwidot\nathaniel.morris@illinois.gov\d0985771\D978A80-Sht-Plan Sheets.dgn

USER NAME = nathaniel.morris	DESIGNED -	REVISED -	
	DRAWN -	REVISED -	
	CHECKED -	REVISED -	
PLOT DATE = 2/11/2025	DATE -	REVISED -	

STATE OF ILLINOIS
DEPARTMENT OF TRANSPORTATION

I-57 SB PLAN

SCALE: 1"=50' | SHEET 34 OF 30 SHEETS | STA. 266+58.27 TO STA. 294+58.27

F.A.I RTE.	SECTION	COUNTY	TOTAL SHEETS	SHEET NO.
57	*	PULASKI	103	34
		CONTRACT NO. 78A80		
	ILLINOIS	FED. AID PROJECT		

77(1,1-1,1-2,1-3,2,2-1,3)RS-3;Bridge Repair 25-4

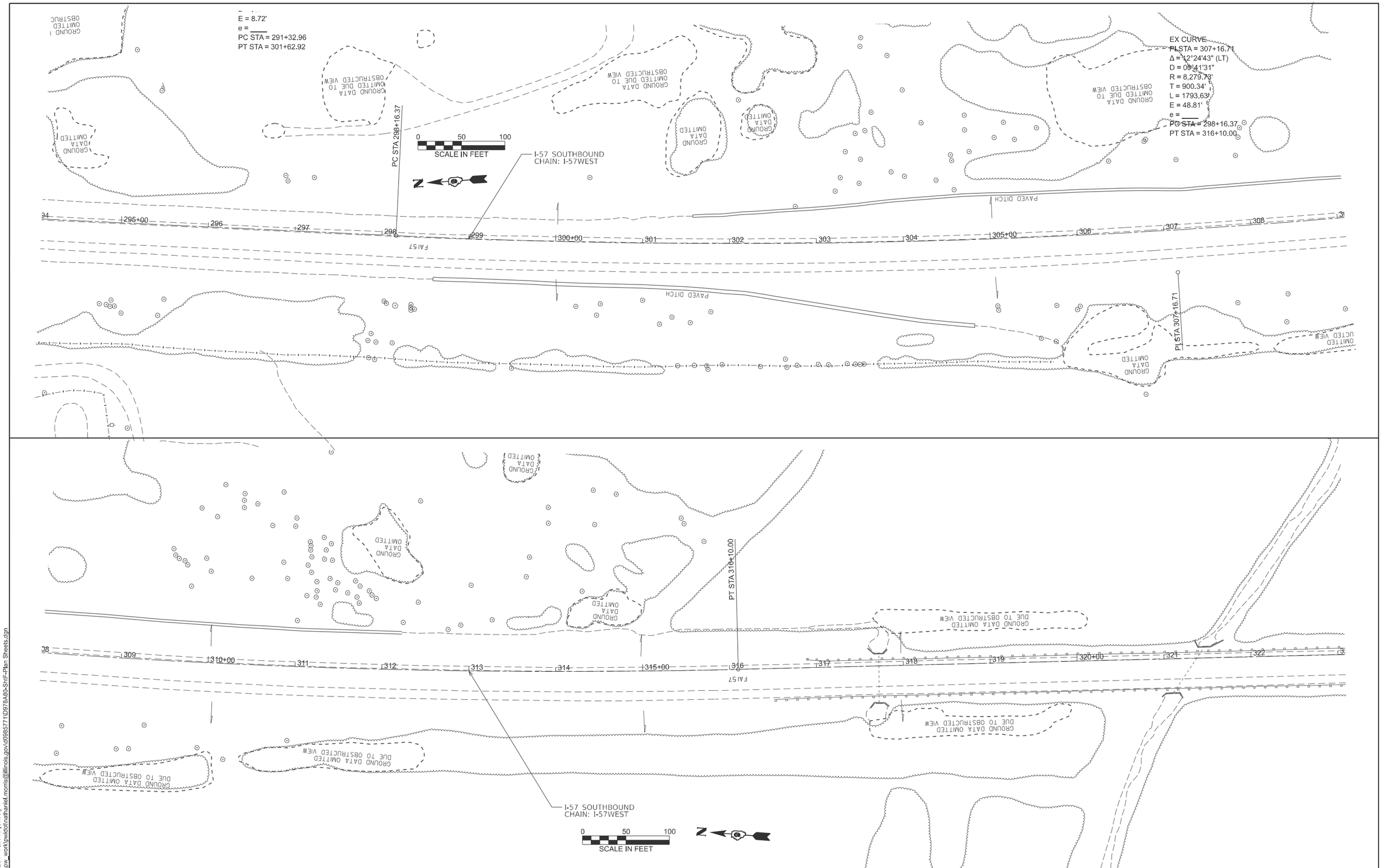

MODEL: I-57WEST - Plan 18 [Sheet]
FILE NAME: c:\pw_work\pwidot\nathaniel.morris\d0985771\D978A80-Sht-F-Plan Sheets.dgn

USER NAME = nathaniel.morris	DESIGNED -	REVISED -	
	DRAWN -	REVISED -	
	CHECKED -	REVISED -	
PLOT DATE = 2/11/2025	DATE -	REVISED -	

STATE OF ILLINOIS
DEPARTMENT OF TRANSPORTATION

I-57 SB PLAN

SCALE: 1"=50' | SHEET 35 OF 30 SHEETS | STA. 294+58.27 TO STA. 322+58.27

F.A.I RTE.	SECTION	COUNTY	TOTAL SHEETS	SHEET NO.
57	*	PULASKI	103	35

CONTRACT NO. 78A80

ILLINOIS | FED. AID PROJECT

77(1,1-1,1-2,1-3,2,2-1,3)RS-3;Bridge Repair 25-4

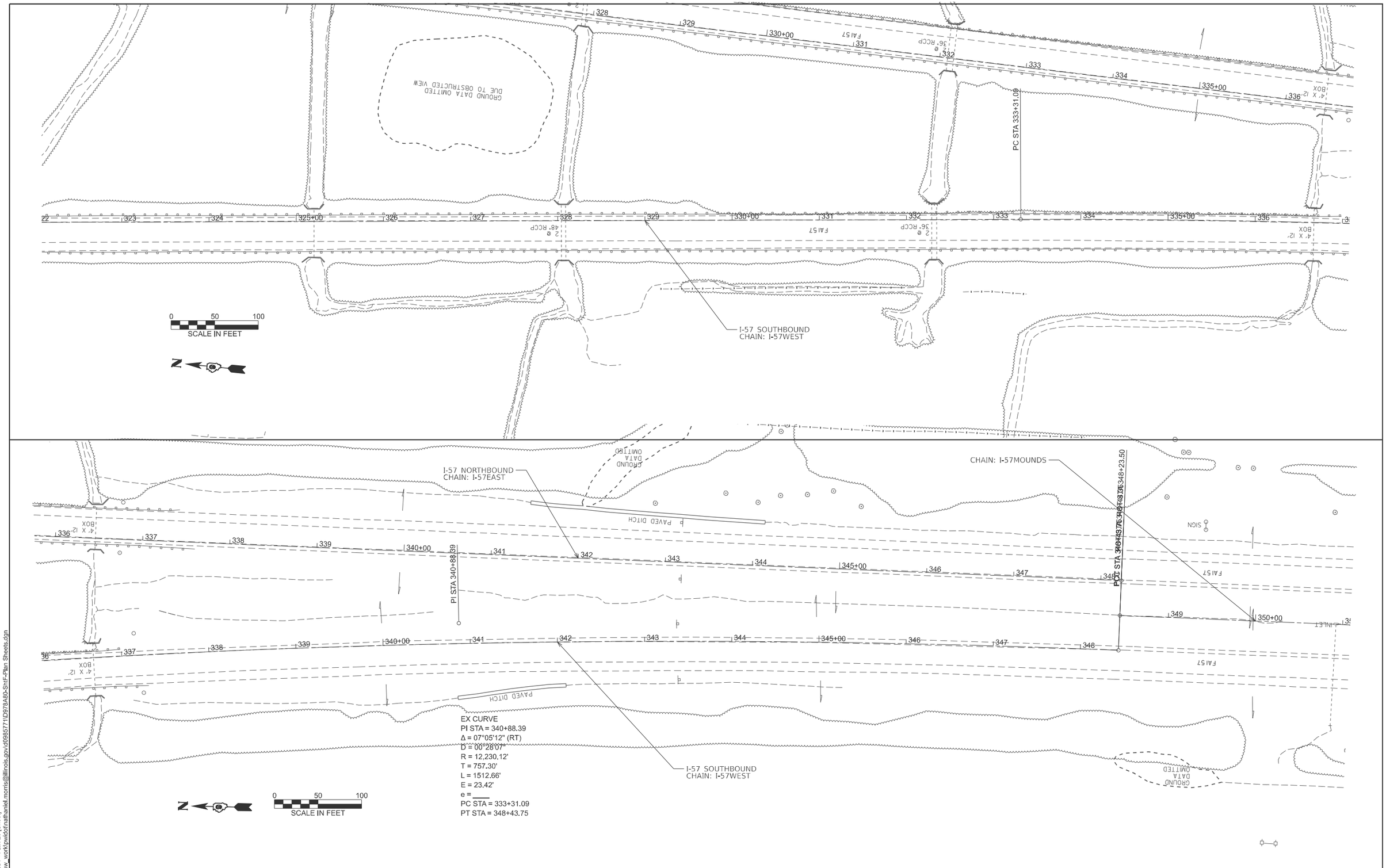

MODEL: I-57WEST - Plan 20 [Sheet]
FILE NAME: c:\pw_work\pwidot\nathaniel.morris@illinois.gov\d0985771\D978A80-Shf-Plan Sheets.dgn

USER NAME = nathaniel.morris	DESIGNED -	REVISED -	
	DRAWN -	REVISED -	
	CHECKED -	REVISED -	
PLOT DATE = 2/11/2025	DATE -	REVISED -	

STATE OF ILLINOIS
DEPARTMENT OF TRANSPORTATION

I-57 SB PLAN

SCALE: 1"=50' | SHEET 36 OF 30 SHEETS | STA. 322+58.27 TO STA. 350+58.27

F.A.I RTE.	SECTION	COUNTY	TOTAL SHEETS	SHEET NO.
57	*	PULASKI	103	36
		CONTRACT NO. 78A80		
		ILLINOIS FED. AID PROJECT		

77(1,1-1,1-2,1-3,2,2-1,3)RS-3;Bridge Repair 25-4

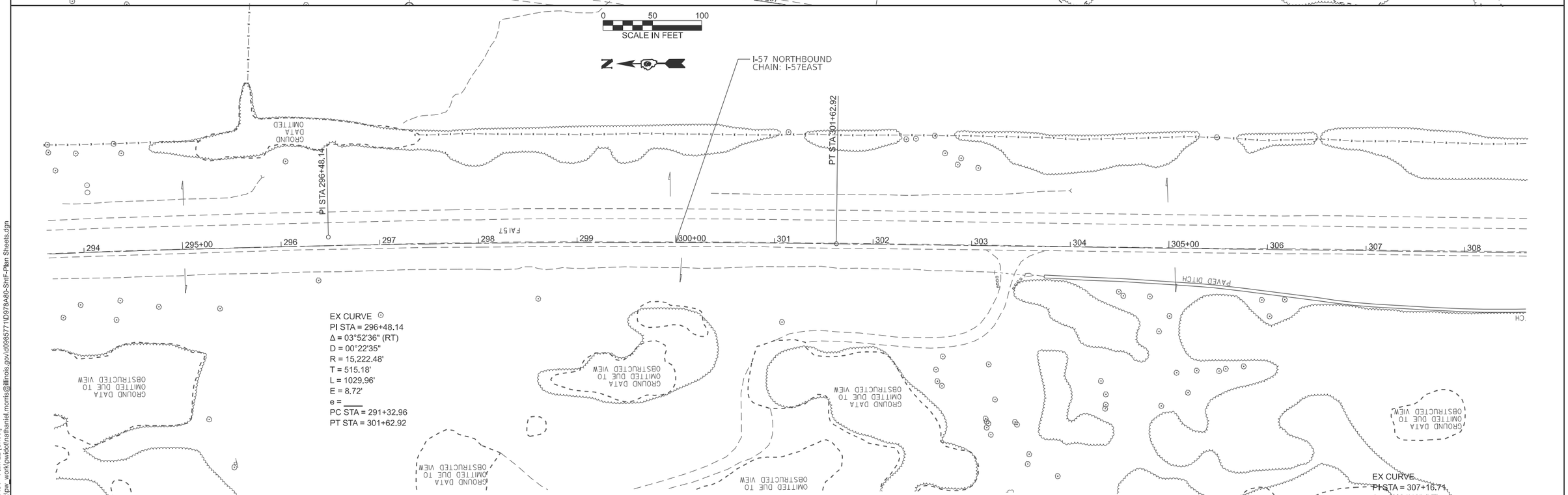

MODEL: I-57EAST - Plan 22 [Sheet]
FILE NAME: c:\pw_work\pwidot\nathaniel.morris@illinois.gov\d0985771\D978A80-ShtF-Plan Sheets.dgn

USER NAME = nathaniel.morris	DESIGNED -	REVISED -	
	DRAWN -	REVISED -	
	CHECKED -	REVISED -	
PLOT DATE = 2/11/2025	DATE -	REVISED -	

STATE OF ILLINOIS
DEPARTMENT OF TRANSPORTATION

I-57 NB PLAN

SCALE: 1"=50' | SHEET 37 OF 30 SHEETS | STA. 280+12.81 TO STA. 308+12.81

F.A.I RTE.	SECTION	COUNTY	TOTAL SHEETS	SHEET NO.
57	*	PULASKI	103	37
		CONTRACT NO. 78A80		
	ILLINOIS	FED. AID PROJECT		

77(1,1-1,1-2,1-3,2,2-1,3)RS-3:Bridge Repair 25-4

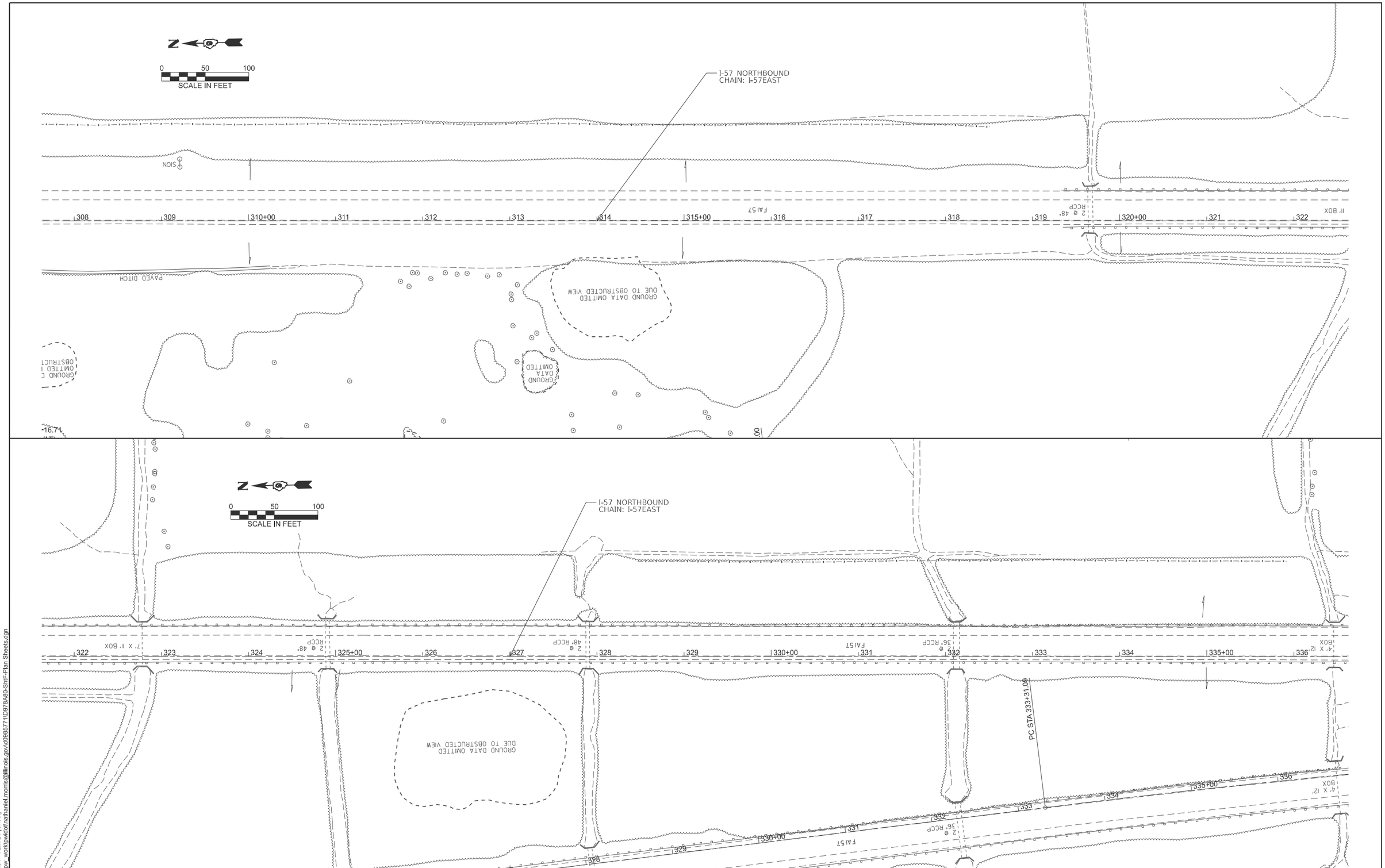

MODEL: I-57EAST - Plan 24 [Sheet]
FILE NAME: c:\pw_work\pwidot\nathaniel.morris@illinois.gov\d0985771\D978A80-ShtF-Plan Sheets.dgn

USER NAME = nathaniel.morris	DESIGNED -	REVISED -	
	DRAWN -	REVISED -	
	CHECKED -	REVISED -	
PLOT DATE = 2/11/2025	DATE -	REVISED -	

STATE OF ILLINOIS
DEPARTMENT OF TRANSPORTATION

I-57 NB PLAN

SCALE: 1"=50' | SHEET 38 OF 30 SHEETS | STA. 308+12.81 TO STA. 336+12.81

F.A.I RTE.	SECTION	COUNTY	TOTAL SHEETS	SHEET NO.
57	*	PULASKI	103	38
		CONTRACT NO. 78A80		
	ILLINOIS	FED. AID PROJECT		

77(1,1-1,1-2,1-3,2,2-1,3)RS-3;Bridge Repair 25-4

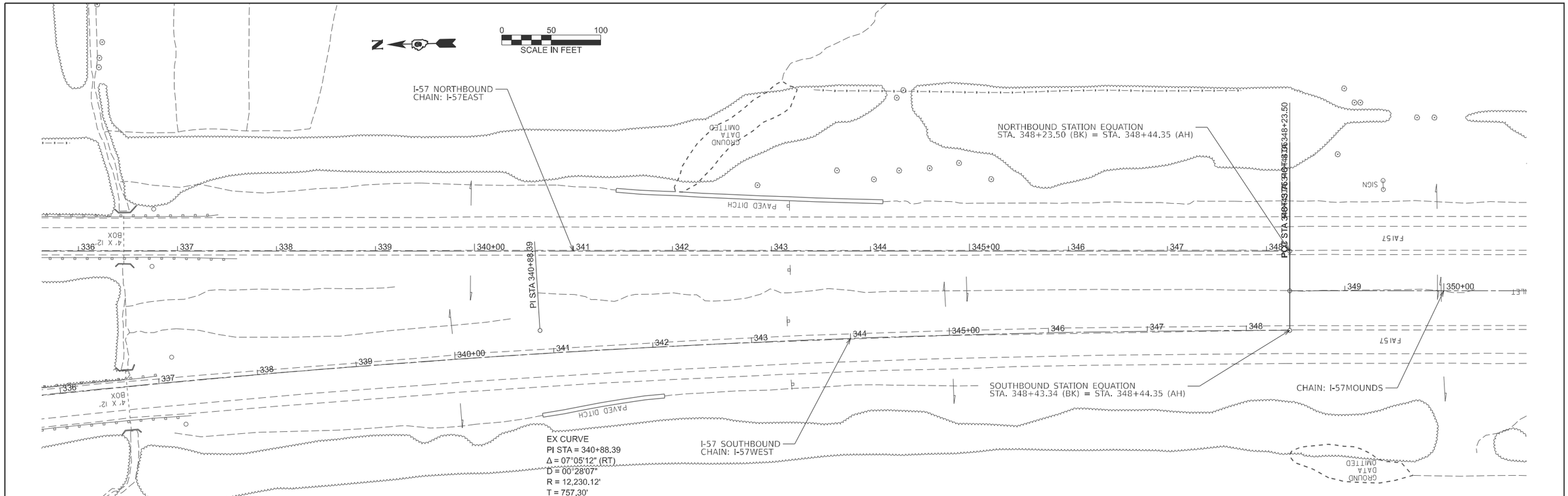

THIS SPACE INTENTIONALLY LEFT BLANK

MODEL: I-57EAST - Plan 26 [Sheet]
FILE NAME: c:\pw_work\pwidot\nathaniel.morris@illinois.gov\d0985771\D978A80-Sht-Plan Sheets.dgn

USER NAME = nathaniel.morris	DESIGNED -	REVISED -	STATE OF ILLINOIS DEPARTMENT OF TRANSPORTATION
	DRAWN -	REVISED -	
	CHECKED -	REVISED -	
PLOT DATE = 2/11/2025	DATE -	REVISED -	

I-57 NB PLAN

SCALE: 1"=50' | SHEET 39 OF 30 SHEETS | STA. 336+12.81 TO STA. 350+12.81

F.A.I RTE.	SECTION	COUNTY	TOTAL SHEETS	SHEET NO.
57	*	PULASKI	103	39

CONTRACT NO. 78A80

ILLINOIS FED. AID PROJECT

77(1,1-1,1-2,1-3,2,2-1,3)RS-3:Bridge Repair 25-4

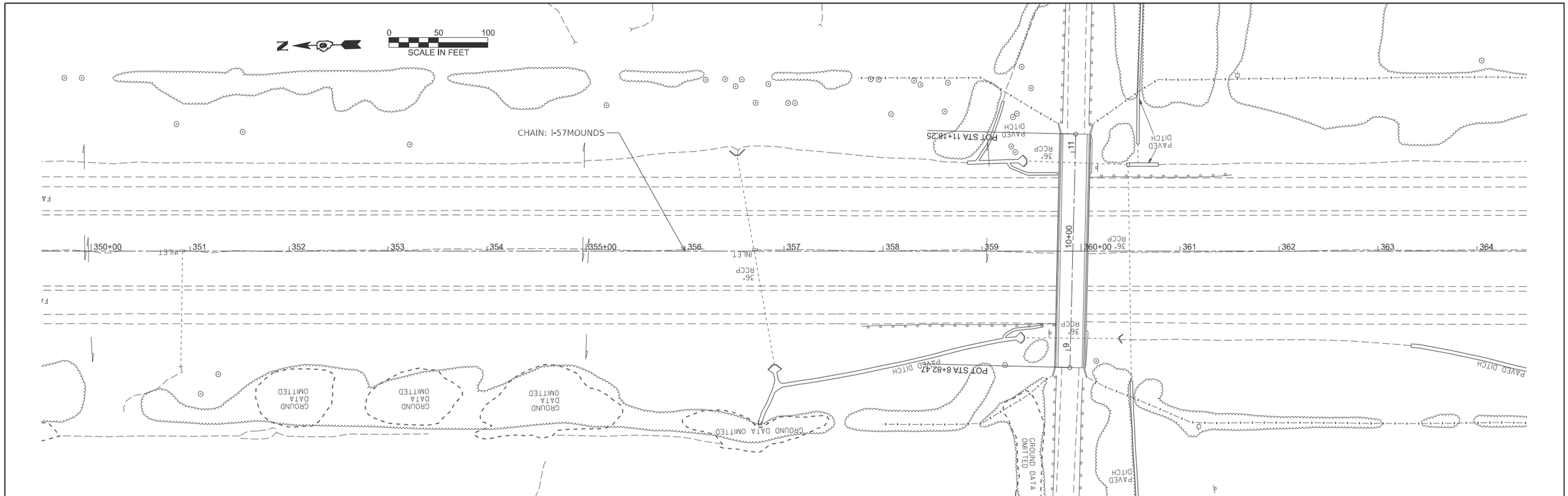

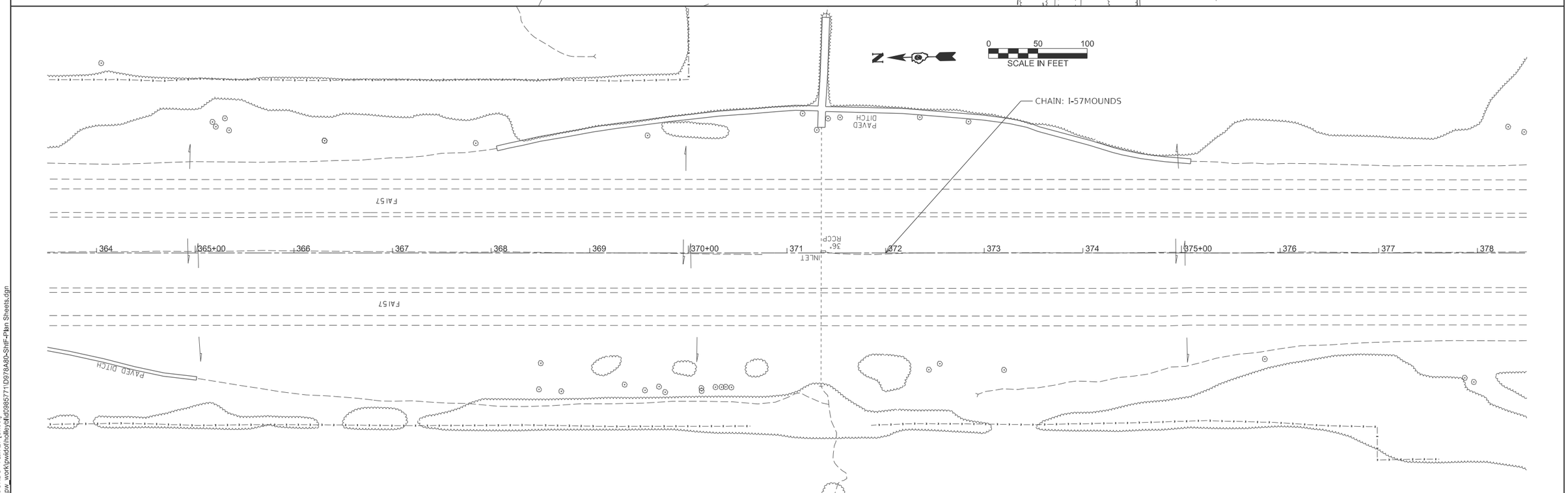

USER NAME = Brandy.Maes	DESIGNED -	REVISED -
	DRAWN -	REVISED -
	CHECKED -	REVISED -
PLOT DATE = 2/6/2025	DATE -	REVISED -

STATE OF ILLINOIS
DEPARTMENT OF TRANSPORTATION

I-57 PLAN

SCALE: 1"=50' | SHEET 40 OF 30 SHEETS | STA. 350+00.00 TO STA. 378+00.00

F.A.I RTE.	SECTION	COUNTY	TOTAL SHEETS	SHEET NO.
57	*	PULASKI	103	40
		CONTRACT NO. 78A80		
		ILLINOIS	FED. AID PROJECT	

77(1,1-1,1-2,1-3,2,2-1,3)RS-3;Bridge Repair 25-4

MODEL: I-57MOUNDS - Plan 27 [Sheet]
FILE NAME: c:\pw_work\pwidot\halleydlk\D985771\D978A80-Shf-Plan Sheets.dgn

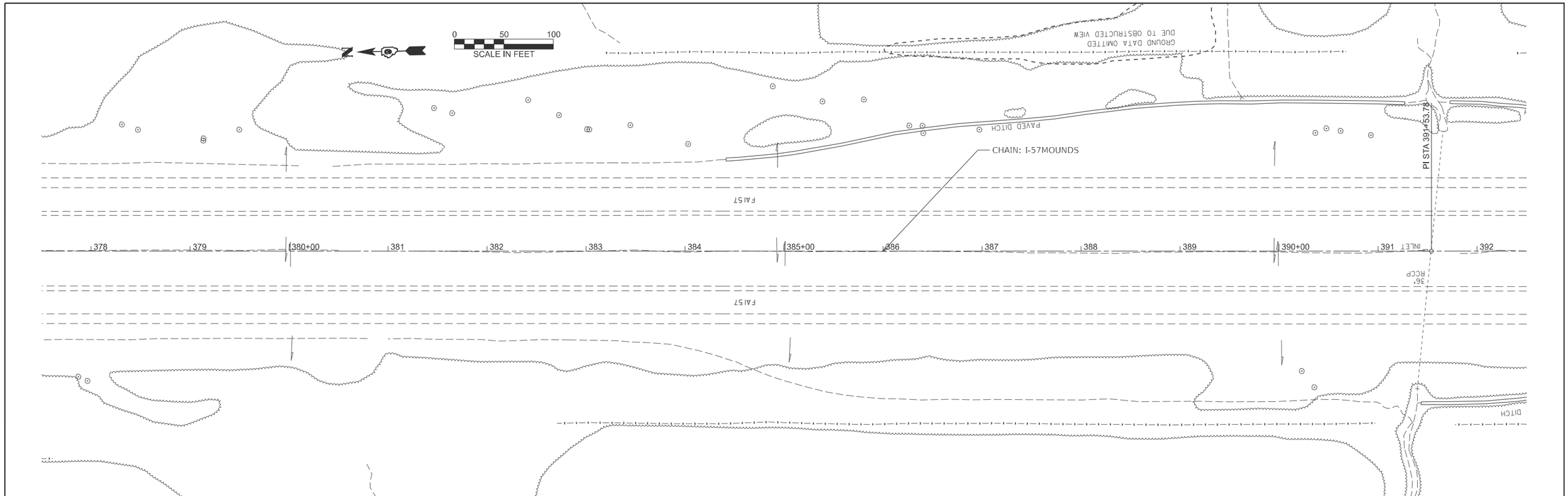

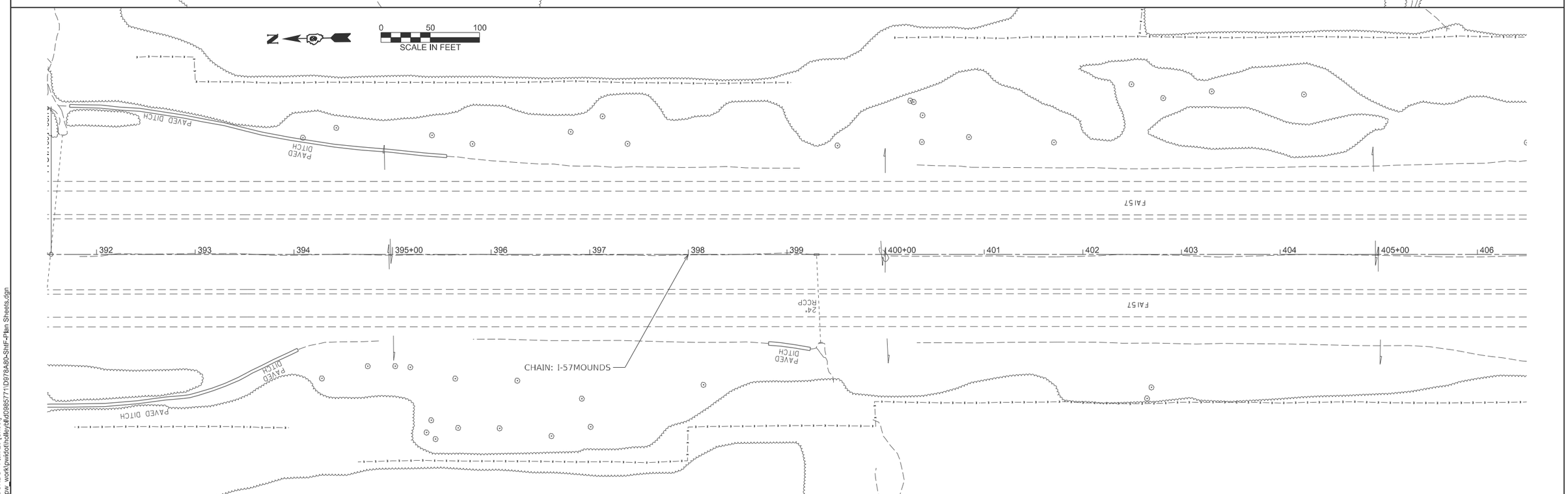

MODEL: I-57MOUNDS - Plan 29 [Sheet]
FILE NAME: c:\pw_work\pwidot\holley3\d0985771\D978A80-ShtF-Plan Sheets.dgn

USER NAME = Brandy.Maes	DESIGNED -	REVISED -	
	DRAWN -	REVISED -	
	CHECKED -	REVISED -	
PLOT DATE = 2/6/2025	DATE -	REVISED -	

STATE OF ILLINOIS
DEPARTMENT OF TRANSPORTATION

I-57 PLAN

SCALE: 1"=50' | SHEET 41 OF 30 SHEETS | STA. 378+00.00 TO STA. 406+00.00

F.A.I RTE.	SECTION	COUNTY	TOTAL SHEETS	SHEET NO.
57	*	PULASKI	103	41
		CONTRACT NO. 78A80		
	ILLINOIS	FED. AID PROJECT		

77(1,1-1,1-2,1-3,2,2-1,3)RS-3:Bridge Repair 25-4

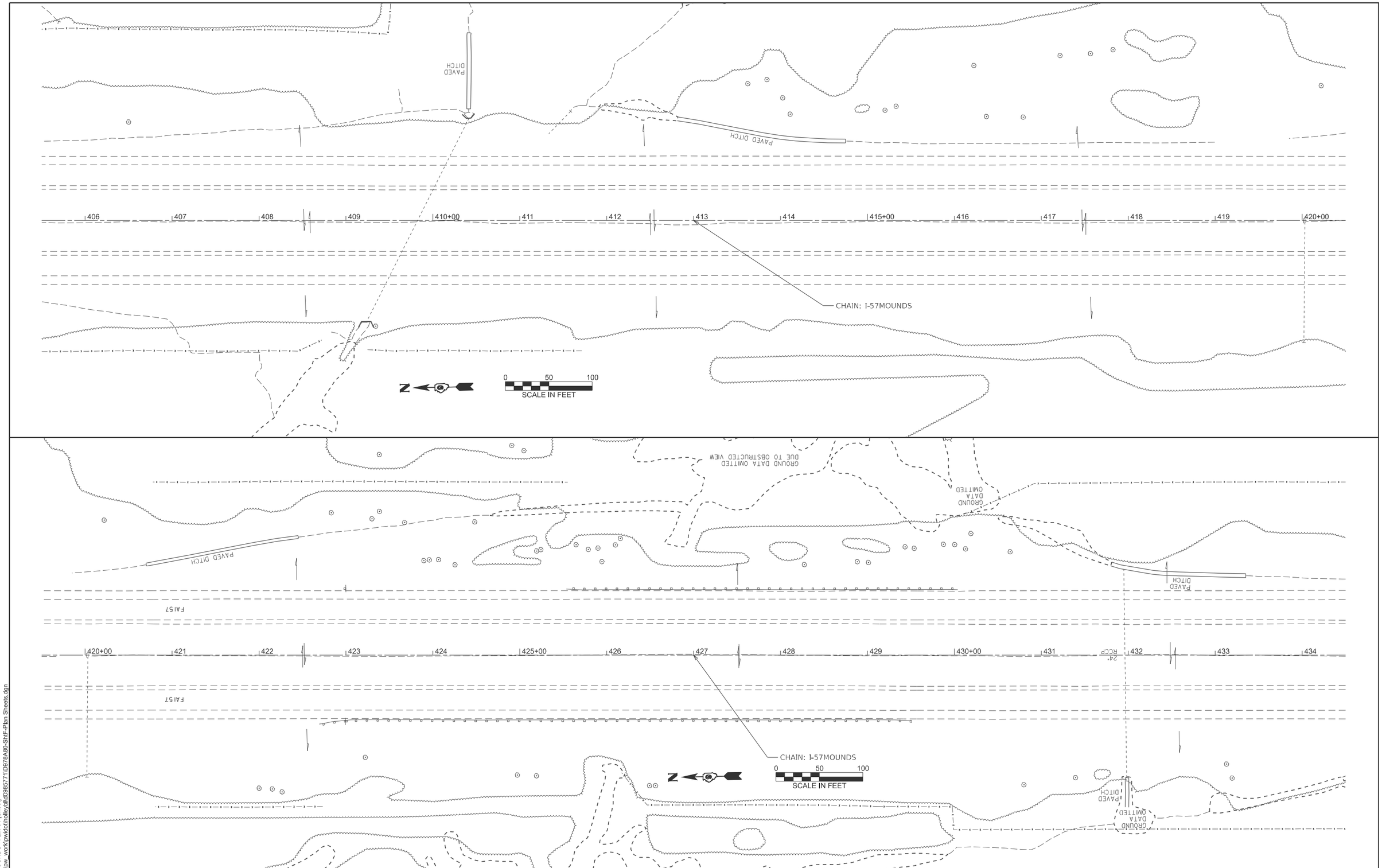

MODEL: I-57MOUNDS - Plan 31 [Sheet]
FILE NAME: c:\pw_work\pwidot\holleyd4\d0985771\D978A80-ShtF-Plan Sheets.dgn

USER NAME = Brandy.Maes	DESIGNED -	REVISED -	
	DRAWN -	REVISED -	
	CHECKED -	REVISED -	
PLOT DATE = 2/6/2025	DATE -	REVISED -	

STATE OF ILLINOIS
DEPARTMENT OF TRANSPORTATION

I-57 PLAN

SCALE: 1"=50' | SHEET 42 OF 30 SHEETS | STA. 406+00.00 TO STA. 434+00.00

F.A.I RTE.	SECTION	COUNTY	TOTAL SHEETS	SHEET NO.
57	*	PULASKI	103	42

CONTRACT NO. 78A80

ILLINOIS | FED. AID PROJECT

77(1,1-1,1-2,1-3,2,2-1,3)RS-3;Bridge Repair 25-4

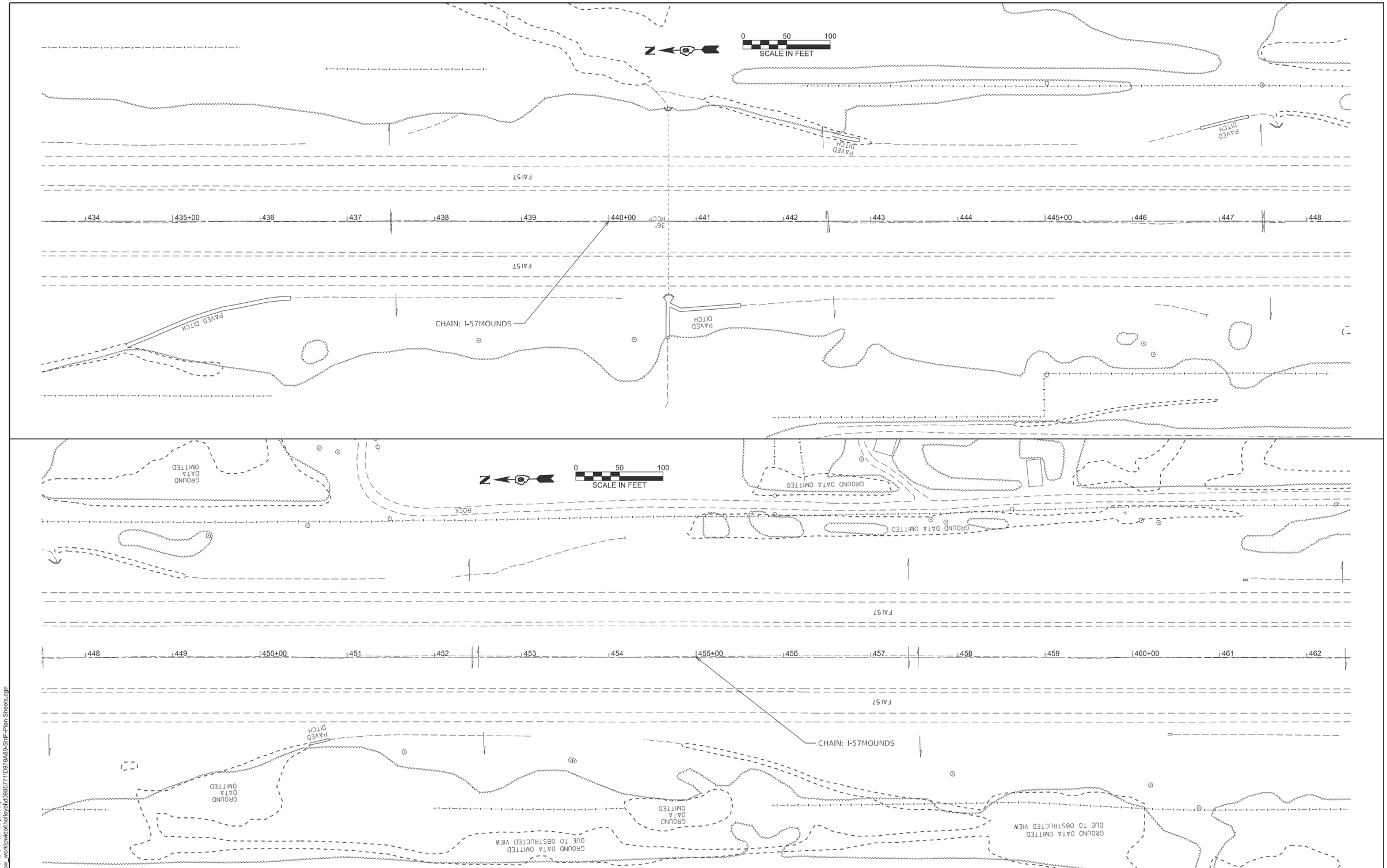

USER NAME = Brandy.Maes	DESIGNED -	REVISED -
	DRAWN -	REVISED -
	CHECKED -	REVISED -
PLOT DATE = 2/6/2025	DATE -	REVISED -

STATE OF ILLINOIS
DEPARTMENT OF TRANSPORTATION

I-57 PLAN

SCALE: 1"=50' | SHEET 43 OF 30 SHEETS | STA. 434+00.00 TO STA. 462+00.00

F.A.I RTE.	SECTION	COUNTY	TOTAL SHEETS	SHEET NO.
57	*	PULASKI	103	43
		CONTRACT NO. 78A80		
		ILLINOIS	FED. AID PROJECT	

77(1,1-1,1-2,1-3,2,2-1,3)RS-3;Bridge Repair 25-4

MODEL: I-57MOUNDS - Plan 33 [Sheet]
FILE NAME: c:\pw_work\pwidot\holley4\d0985771\D978A80-ShtF-Plan Sheets.dgn

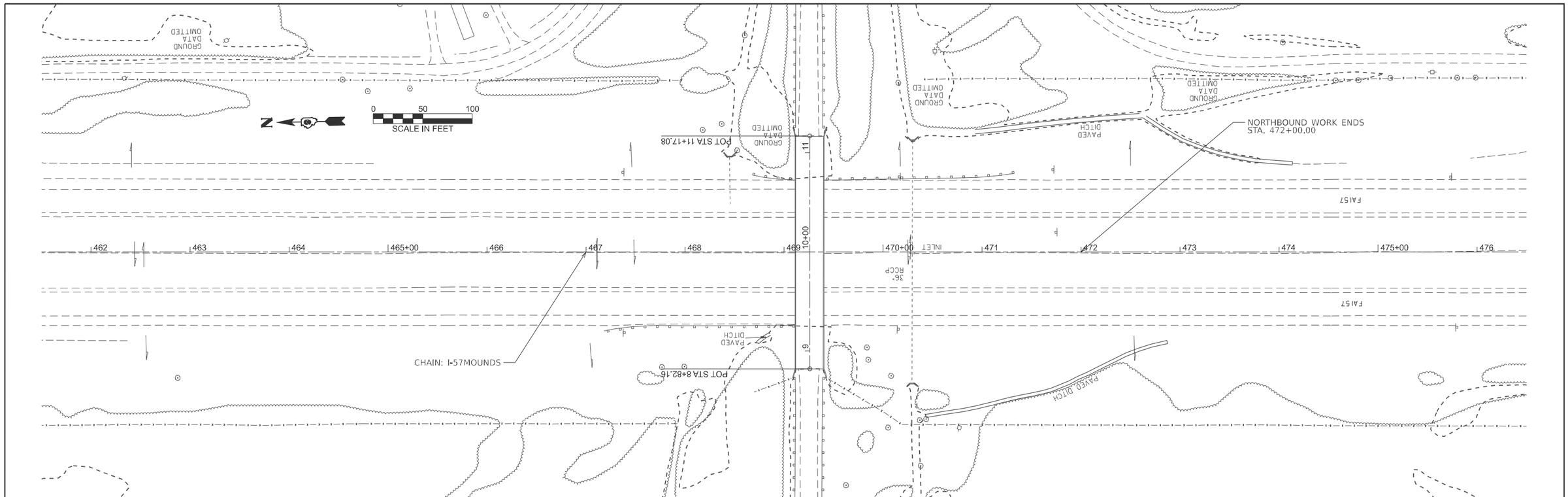

THIS SPACE INTENTIONALLY LEFT BLANK

MODEL: I-57MOUNDS - Plan 35 [Sheet]
FILE NAME: c:\pw_work\pwidot\halley\d0985771\D978A80-ShtF-Plan Sheets.dgn

USER NAME = Brandy.Maes	DESIGNED -	REVISED -	STATE OF ILLINOIS DEPARTMENT OF TRANSPORTATION
	DRAWN -	REVISED -	
	CHECKED -	REVISED -	
PLOT DATE = 2/6/2025	DATE -	REVISED -	

I-57 PLAN

SCALE: 1"=50' | SHEET 44 OF 30 SHEETS | STA. 462+00.00 TO STA. 476+00.00

F.A.I RTE.	SECTION	COUNTY	TOTAL SHEETS	SHEET NO.
57	*	PULASKI	103	44

CONTRACT NO. 78A80

ILLINOIS FED. AID PROJECT

77(1,1-1,1-2,1-3,2,2-1,3)RS-3:Bridge Repair 25-4

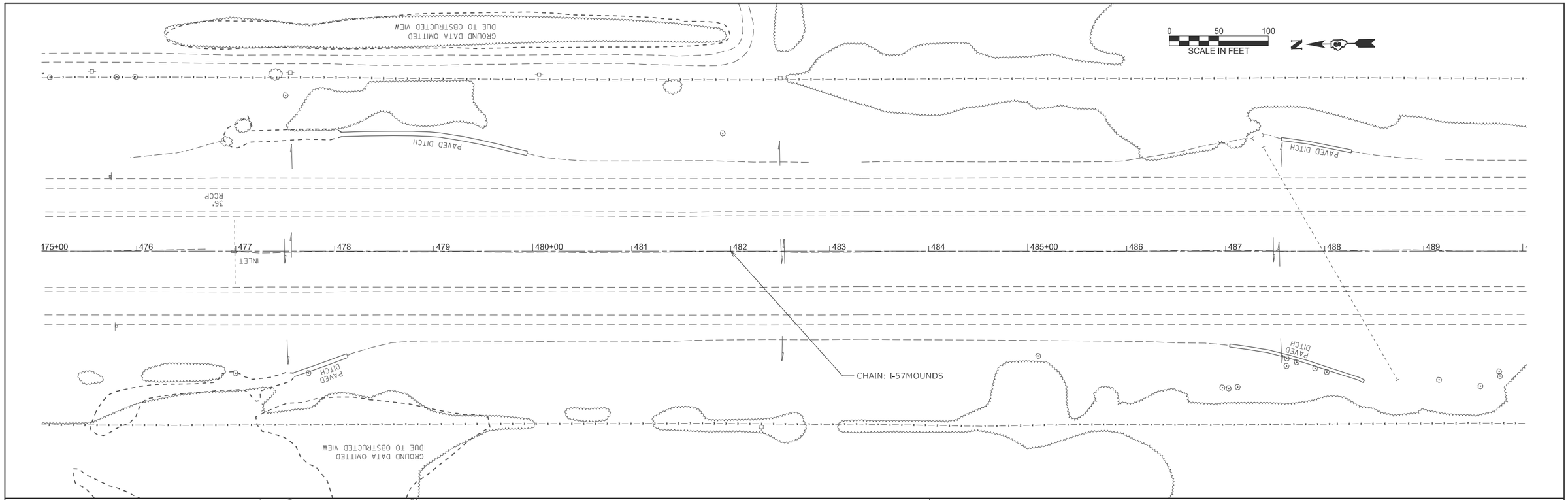

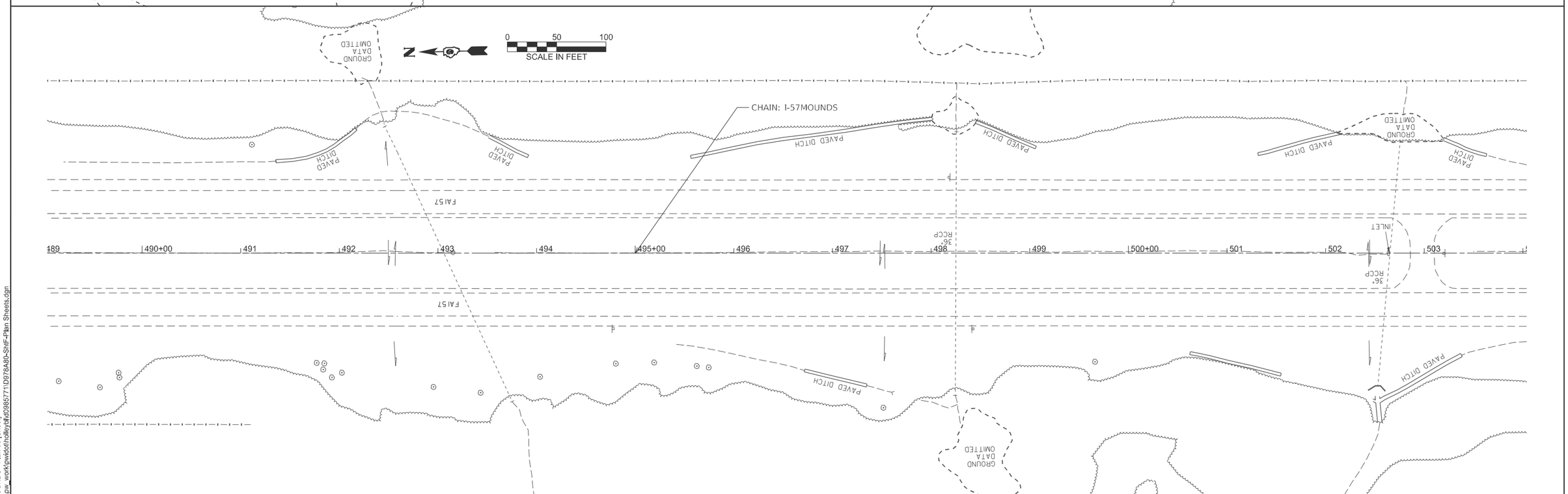

MODEL: I-57MOUNDS - Plan 36 [Sheet]
FILE NAME: c:\pw_work\pwidot\hilleyatd\d0985771\D978A80-Sht-Plan Sheets.dgn

USER NAME = Brandy.Maes	DESIGNED -	REVISED -	
	DRAWN -	REVISED -	
	CHECKED -	REVISED -	
PLOT DATE = 2/6/2025	DATE -	REVISED -	

STATE OF ILLINOIS
DEPARTMENT OF TRANSPORTATION

I-57 PLAN

SCALE: 1"=50' | SHEET 45 OF 30 SHEETS | STA. 475+54.00 TO STA. 503+54.00

F.A.I RTE.	SECTION	COUNTY	TOTAL SHEETS	SHEET NO.
57	*	PULASKI	103	45
		CONTRACT NO. 78A80		
		ILLINOIS FED. AID PROJECT		

77(1,1-1,1-2,1-3,2,2-1,3)RS-3;Bridge Repair 25-4

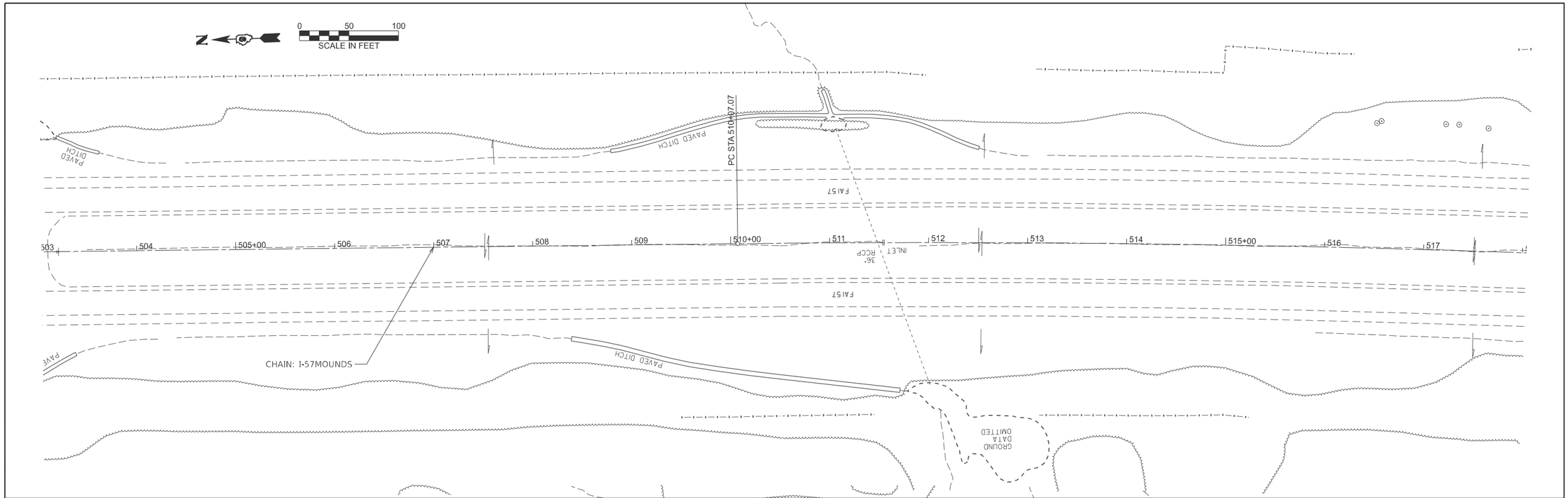

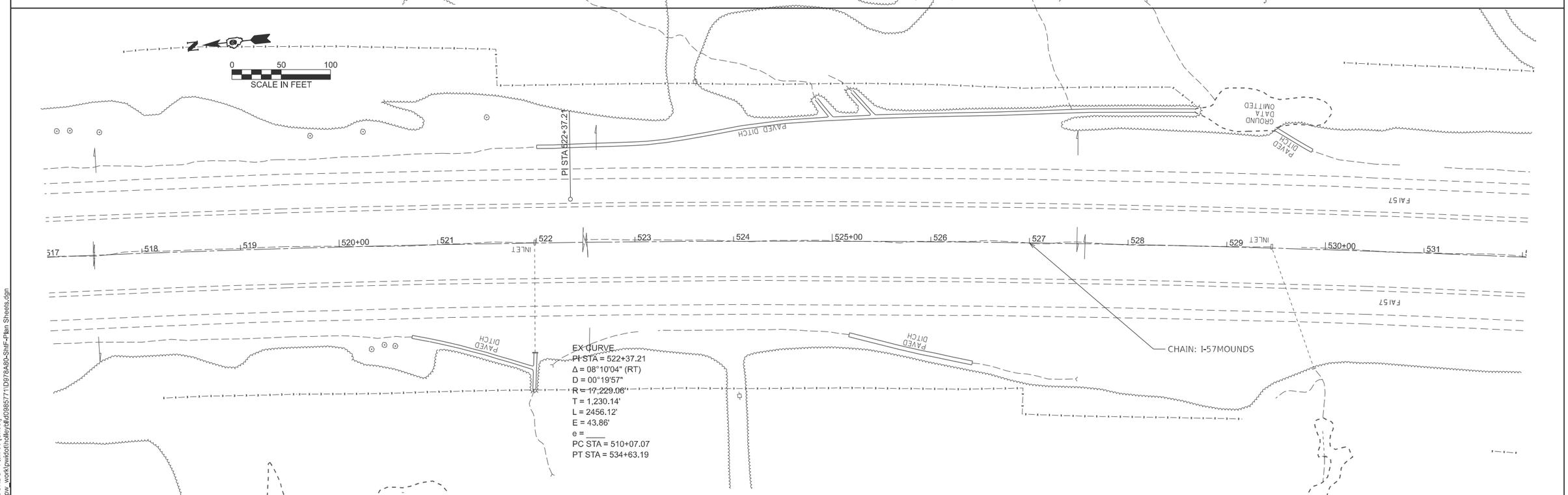

MODEL: I-57MOUNDS - Plan 38 [Sheet]
FILE NAME: c:\pw_work\pwidot\holleyal\d0985771\D978A80-ShtF-Plan Sheets.dgn

USER NAME = Brandy.Maes	DESIGNED -	REVISED -	
	DRAWN -	REVISED -	
	CHECKED -	REVISED -	
PLOT DATE = 2/6/2025	DATE -	REVISED -	

STATE OF ILLINOIS
DEPARTMENT OF TRANSPORTATION

I-57 PLAN

SCALE: 1"=50' | SHEET 46 OF 30 SHEETS | STA. 503+54.00 TO STA. 531+54.00

F.A.I RTE.	SECTION	COUNTY	TOTAL SHEETS	SHEET NO.
57	*	PULASKI	103	46
		CONTRACT NO. 78A80		
	ILLINOIS	FED. AID PROJECT		

77(1,1-1,1-2,1-3,2,2-1,3)RS-3;Bridge Repair 25-4

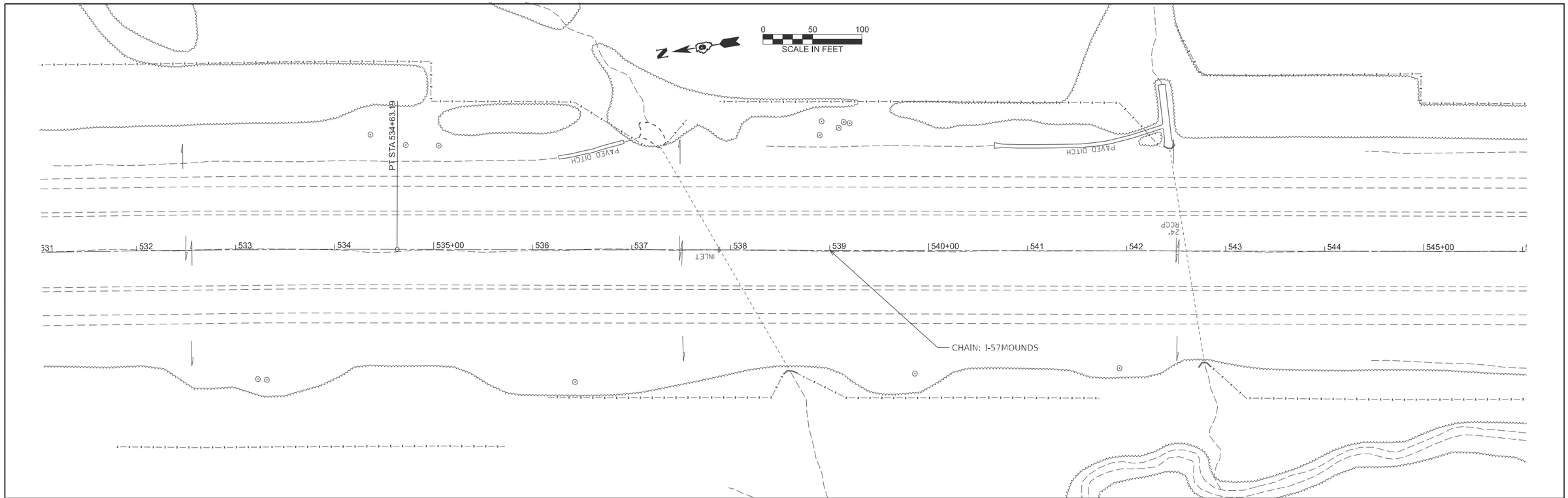

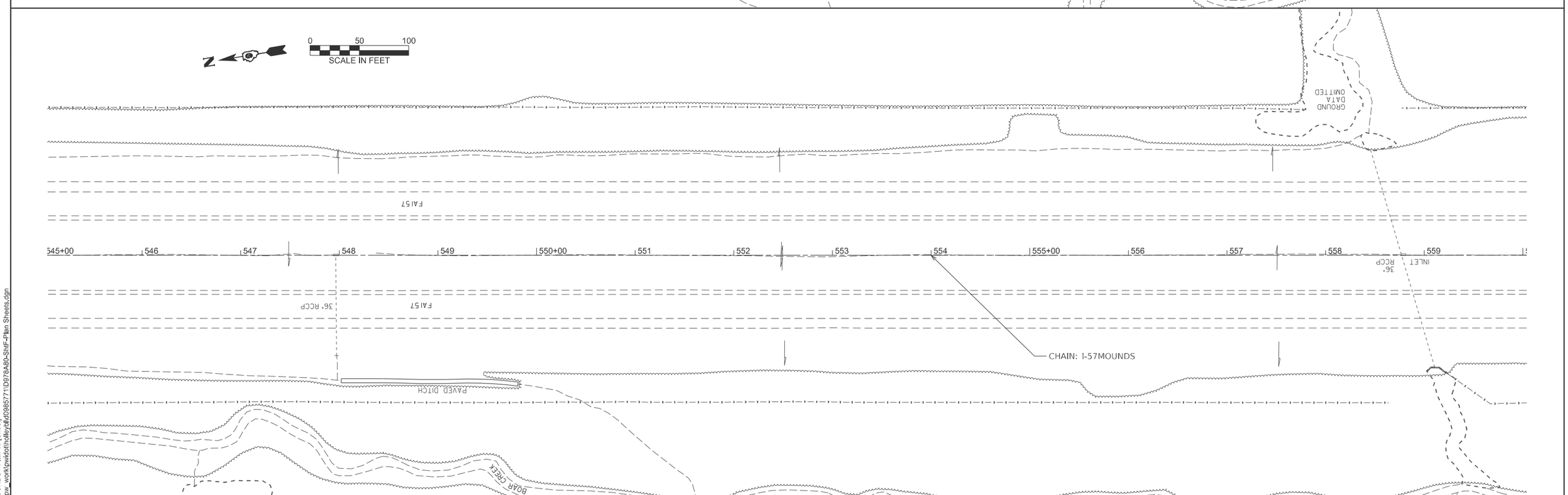

MODEL: I-57MOUNDS - Plan 40 [Sheet]
FILE NAME: c:\pw_work\pwidot\holleyjd\d0385771\D978A80-Sht-Plan Sheets.dgn

USER NAME = Brandy.Maes	DESIGNED -	REVISED -	
	DRAWN -	REVISED -	
	CHECKED -	REVISED -	
PLOT DATE = 2/6/2025	DATE -	REVISED -	

STATE OF ILLINOIS
DEPARTMENT OF TRANSPORTATION

I-57 PLAN

SCALE: 1"=50' | SHEET 47 OF 30 SHEETS | STA. 531+54.00 TO STA. 559+54.00

F.A.I RTE.	SECTION	COUNTY	TOTAL SHEETS	SHEET NO.
57	*	PULASKI	103	47
		CONTRACT NO. 78A80		
	ILLINOIS	FED. AID PROJECT		

77(1,1-1,1-2,1-3,2,2-1,3)RS-3;Bridge Repair 25-4

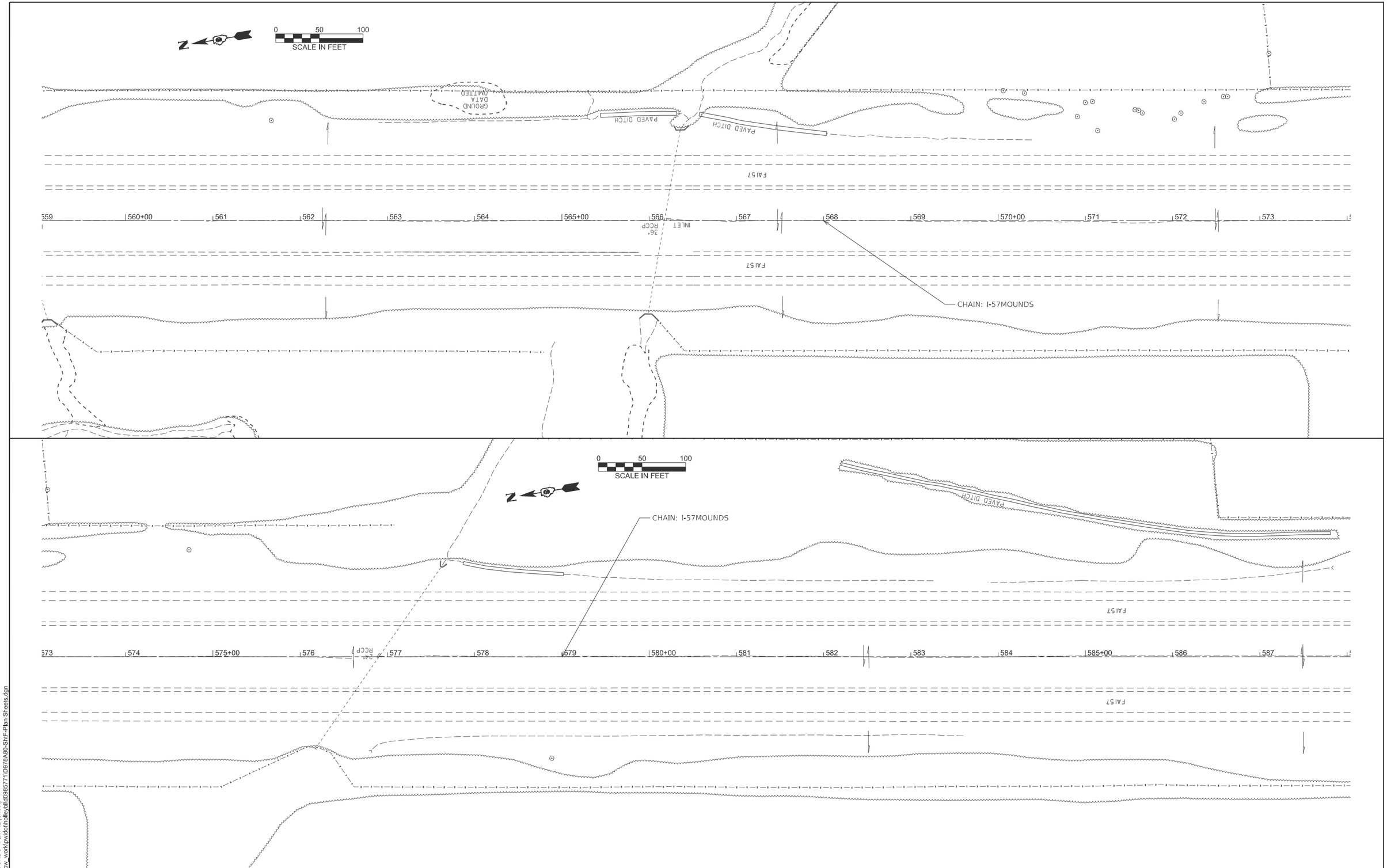

MODEL: I-57MOUNDS - Plan 42 [Sheet]
FILE NAME: c:\pw_work\pwidot\hilleyrd\d0385771\D78A80-Sht-Plan Sheets.dgn

USER NAME = Brandy.Maes	DESIGNED -	REVISED -	
	DRAWN -	REVISED -	
	CHECKED -	REVISED -	
PLOT DATE = 2/6/2025	DATE -	REVISED -	

STATE OF ILLINOIS
DEPARTMENT OF TRANSPORTATION

I-57 PLAN

SCALE: 1"=50' | SHEET 48 OF 30 SHEETS | STA. 559+54.00 TO STA. 587+54.00

F.A.I RTE.	SECTION	COUNTY	TOTAL SHEETS	SHEET NO.
57	*	PULASKI	103	48

CONTRACT NO. 78A80

ILLINOIS | FED. AID PROJECT

77(1,1-1,1-2,1-3,2,2-1,3)RS-3;Bridge Repair 25-4

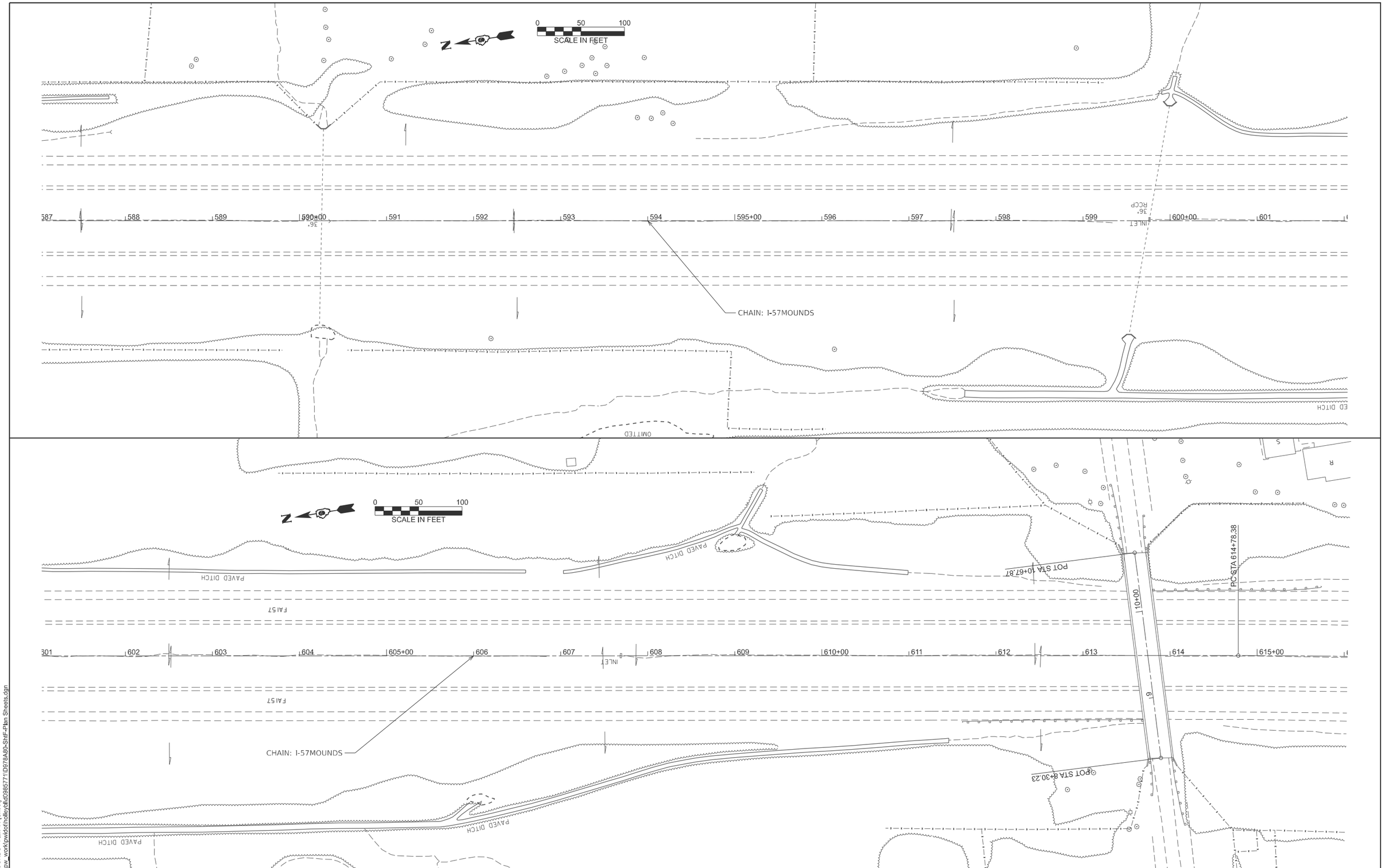

MODEL: I-57MOUNDS - Plan 44 [Sheet]
FILE NAME: c:\pw_work\pwidot\holleyatd\d998577\D978A80-Sht-Plan Sheets.dgn

USER NAME = Brandy.Maes	DESIGNED -	REVISED -	
	DRAWN -	REVISED -	
	CHECKED -	REVISED -	
PLOT DATE = 2/6/2025	DATE -	REVISED -	

STATE OF ILLINOIS
DEPARTMENT OF TRANSPORTATION

I-57 PLAN

SCALE: 1"=50' | SHEET 49 OF 30 SHEETS | STA. 587+54.00 TO STA. 615+54.00

F.A.I RTE.	SECTION	COUNTY	TOTAL SHEETS	SHEET NO.
57	*	PULASKI	103	49

CONTRACT NO. 78A80

ILLINOIS | FED. AID PROJECT

77(1,1-1,1-2,1-3,2,2-1,3)RS-3;Bridge Repair 25-4

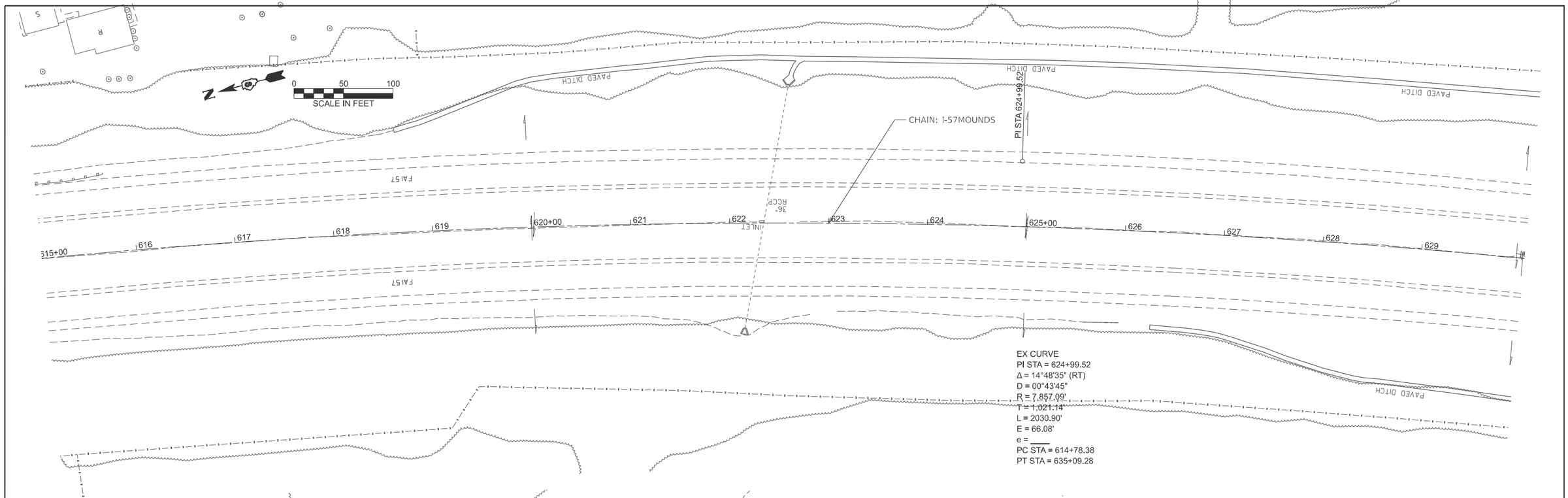

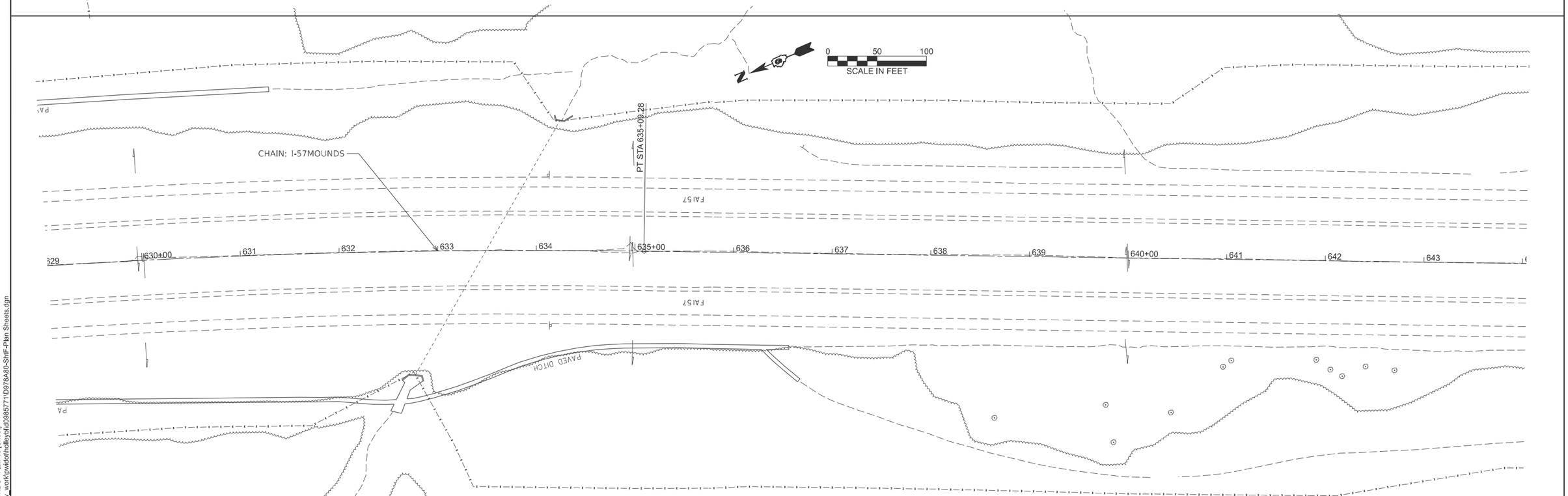

MODEL: I-57MOUNDS - Plan 46 [Sheet]
FILE NAME: c:\pw_work\pwidot\holleyatd\d985771\D978A80-Shif-Plan Sheets.dgn

USER NAME = Brandy.Maes	DESIGNED -	REVISED -	
	DRAWN -	REVISED -	
	CHECKED -	REVISED -	
PLOT DATE = 2/6/2025	DATE -	REVISED -	

STATE OF ILLINOIS
DEPARTMENT OF TRANSPORTATION

I-57 PLAN

SCALE: 1"=50' | SHEET 50 OF 30 SHEETS | STA. 615+54.00 TO STA. 643+54.00

F.A.I RTE.	SECTION	COUNTY	TOTAL SHEETS	SHEET NO.
57	*	PULASKI	103	50
		CONTRACT NO. 78A80		
	ILLINOIS	FED. AID PROJECT		

77(1,1-1,1-2,1-3,2,2-1,3)RS-3;Bridge Repair 25-4

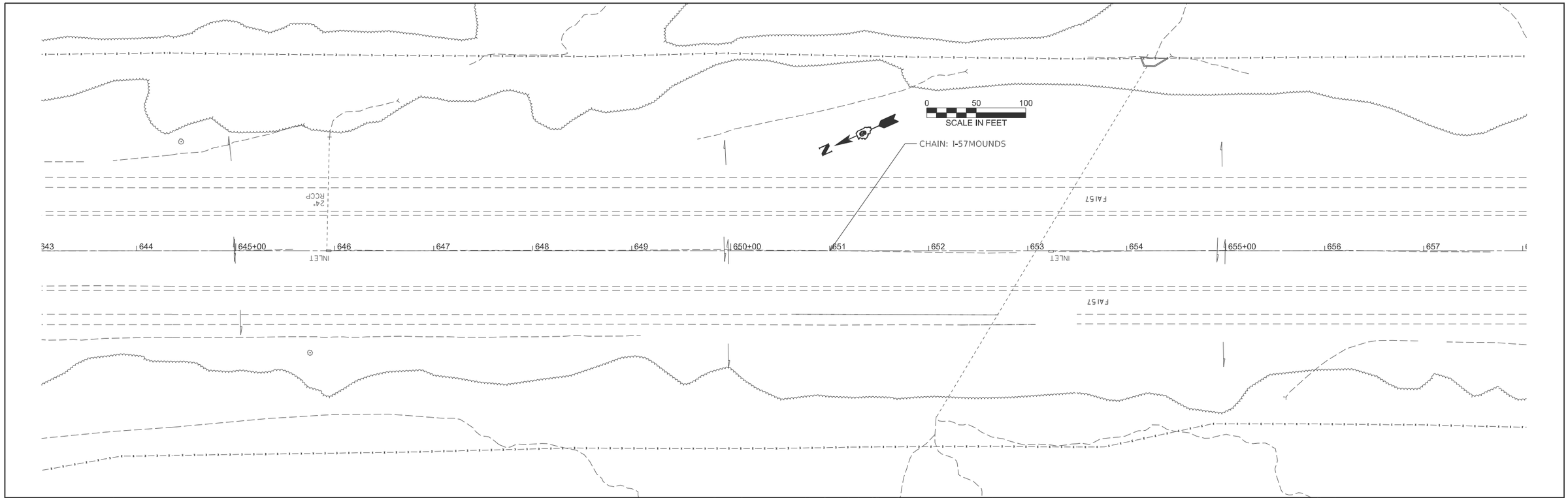

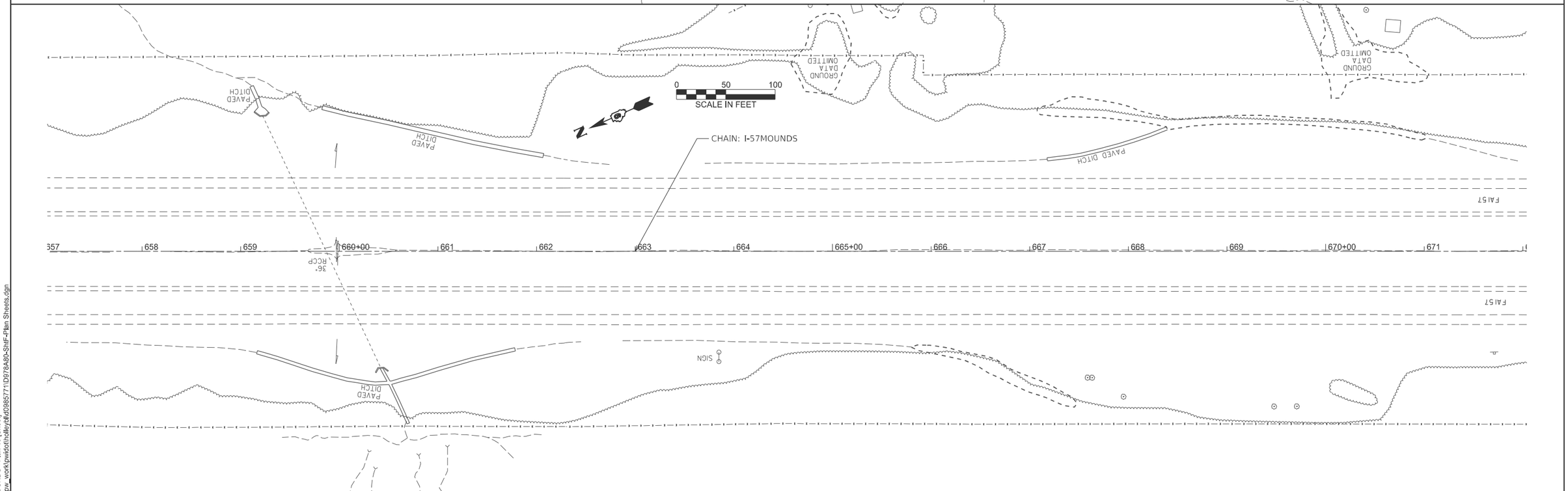

MODEL: I-57MOUNDS - Plan 48 [Sheet]
FILE NAME: c:\pw_work\pwidot\holleyatd\d985771\D978A80-Shif-Plan Sheets.dgn

USER NAME = Brandy.Maes	DESIGNED -	REVISED -	
	DRAWN -	REVISED -	
	CHECKED -	REVISED -	
PLOT DATE = 2/6/2025	DATE -	REVISED -	

STATE OF ILLINOIS
DEPARTMENT OF TRANSPORTATION

I-57 PLAN

SCALE: 1"=50' | SHEET 51 OF 30 SHEETS | STA. 643+54.00 TO STA. 671+54.00

F.A.I RTE.	SECTION	COUNTY	TOTAL SHEETS	SHEET NO.
57	*	PULASKI	103	51
		CONTRACT NO. 78A80		
		ILLINOIS FED. AID PROJECT		

77(1,1-1,1-2,1-3,2,2-1,3)RS-3;Bridge Repair 25-4

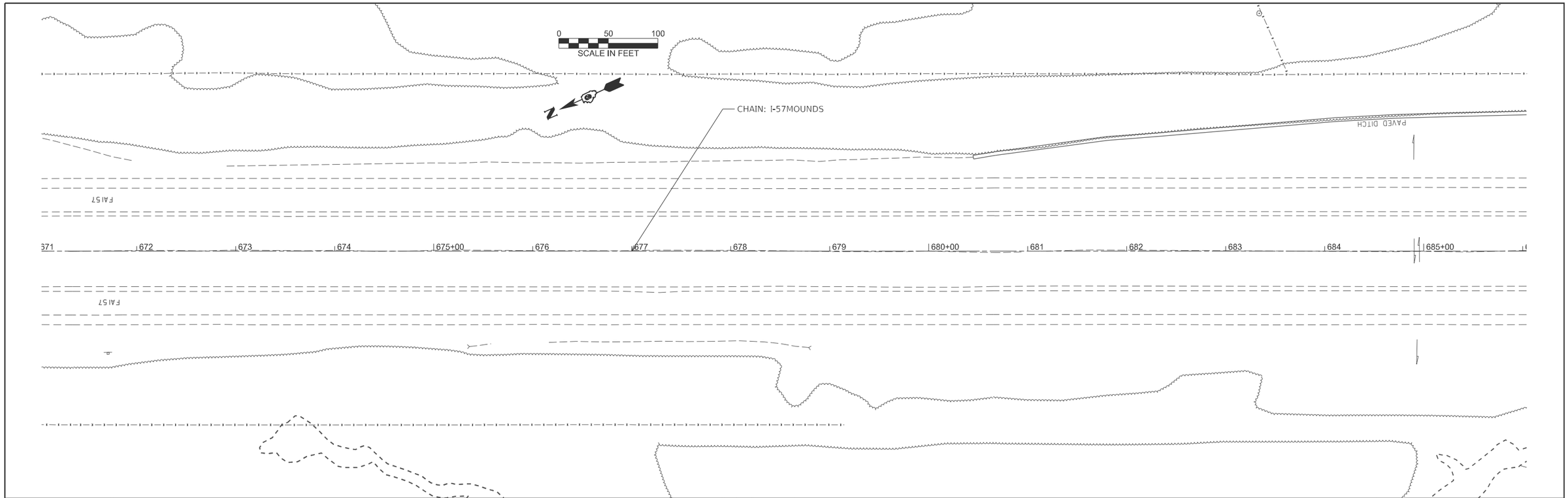

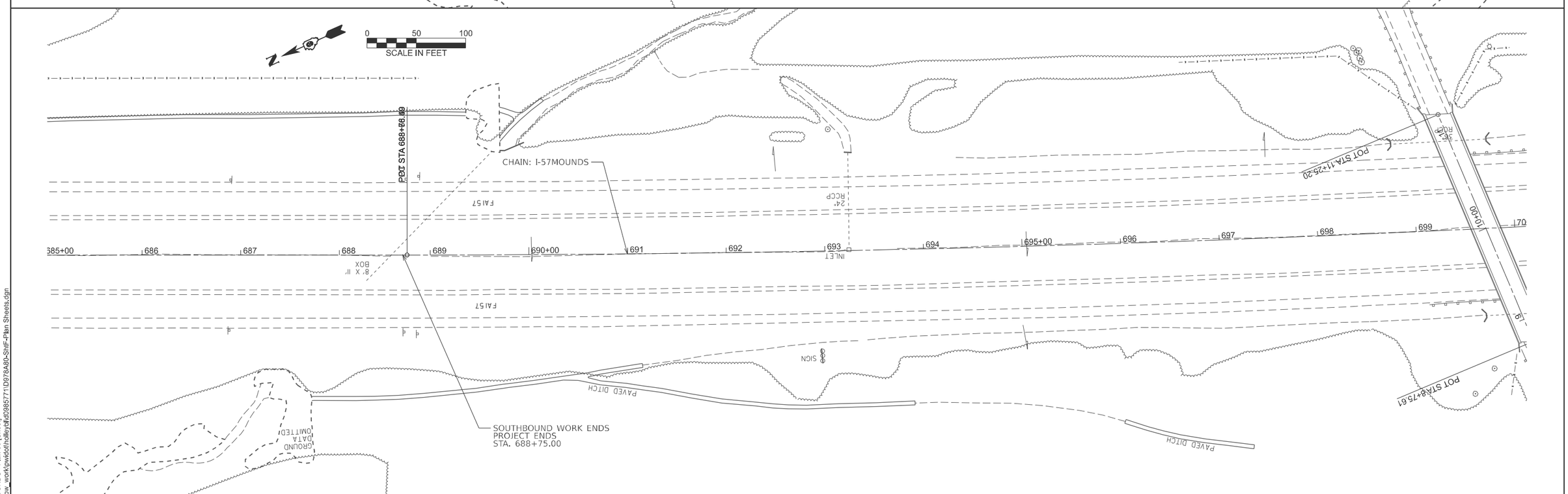

MODEL: I-57MOUNDS - Plan 50 [Sheet]
FILE NAME: c:\pw_work\pwidot\holleyal\d0985771\D978A80-Shtf-Plan Sheets.dgn

USER NAME = Brandy.Maes	DESIGNED -	REVISED -	
	DRAWN -	REVISED -	
	CHECKED -	REVISED -	
PLOT DATE = 2/6/2025	DATE -	REVISED -	

STATE OF ILLINOIS
DEPARTMENT OF TRANSPORTATION

I-57 PLAN

SCALE: 1"=50' | SHEET 52 OF 30 SHEETS | STA. 671+54.00 TO STA. 699+54.00

F.A.I RTE.	SECTION	COUNTY	TOTAL SHEETS	SHEET NO.
57	*	PULASKI	103	52

CONTRACT NO. 78A80

ILLINOIS | FED. AID PROJECT

77(1,1-1,1-2,1-3,2,2-1,3)RS-3;Bridge Repair 25-4

PAVEMENT DETAIL AT PERKS ROAD OVERPASS

NORTHBOUND ONLY

NOT TO SCALE

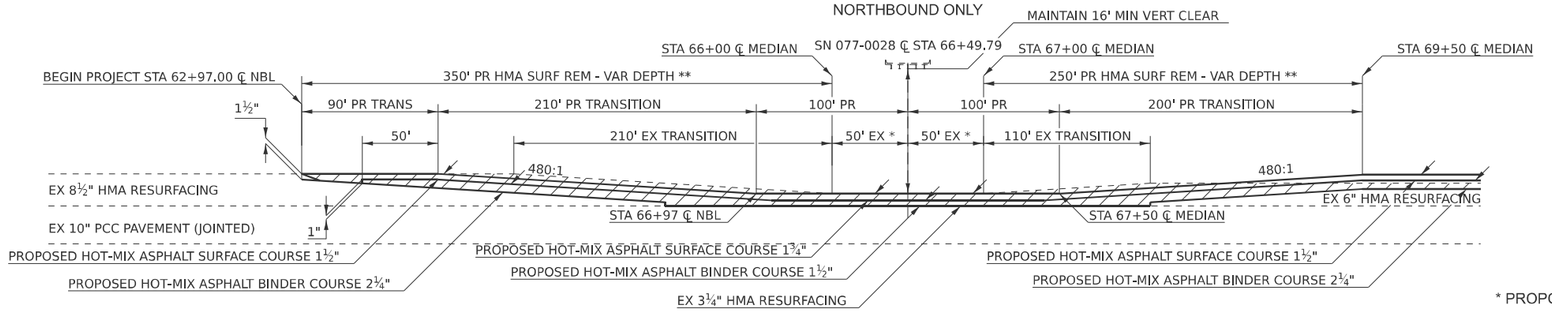

EQ STA 66+27.18 ℄ NBL BK = STA 65+79.97 ℄ MEDIAN AH

* PROPOSED HMA SURFACE REMOVAL 3¼" IN AREA OF EXISTING INLAY

** SEE SPECIAL PROVISIONS (HMA SURFACE REMOVAL, VARIABLE DEPTH)

PAVEMENT DETAIL AT PERKS ROAD OVERPASS

SOUTHBOUND ONLY

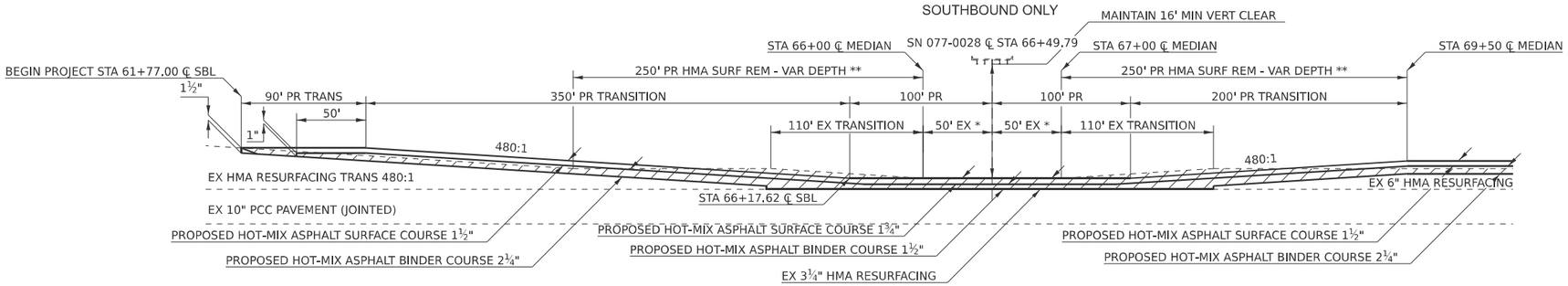

EQ STA 66+47.80 ℄ SBL BK = STA 65+79.97 ℄ MEDIAN AH

PAVEMENT DETAIL AT TR 60 OVERPASS

NORTHBOUND AND SOUTHBOUND

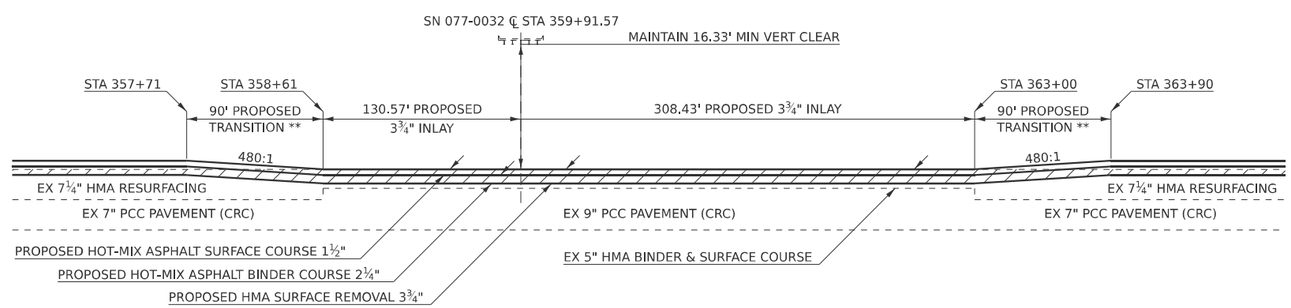

PROPOSED HOT-MIX ASPHALT SURFACE REMOVAL

MODEL: Pavement Detail-1 [Sheet]
FILE NAME: c:\pw_work\pwidot\nathaniel.morris@illinois.gov\d0985771\D978A80-SHTG-Pvmnt_Dtl.dgn

USER NAME = nathaniel.morris	DESIGNED -	REVISED -	
	DRAWN -	REVISED -	
	CHECKED -	REVISED -	
PLOT DATE = 2/11/2025	DATE -	REVISED -	

STATE OF ILLINOIS
DEPARTMENT OF TRANSPORTATION

PAVEMENT DETAILS

SCALE: | SHEET 53 OF 30 SHEETS | STA. | TO STA.

F.A.I RTE.	SECTION	COUNTY	TOTAL SHEETS	SHEET NO.
57	*	PULASKI	103	53

CONTRACT NO. 78A80

ILLINOIS | FED. AID PROJECT

77(1,1-1,1-2,1-3,2,2-1,3)RS-3;Bridge Repair 25-4

NOT TO SCALE

PAVEMENT DETAIL AT PULASKI RD OVERPASS

NORTHBOUND ONLY

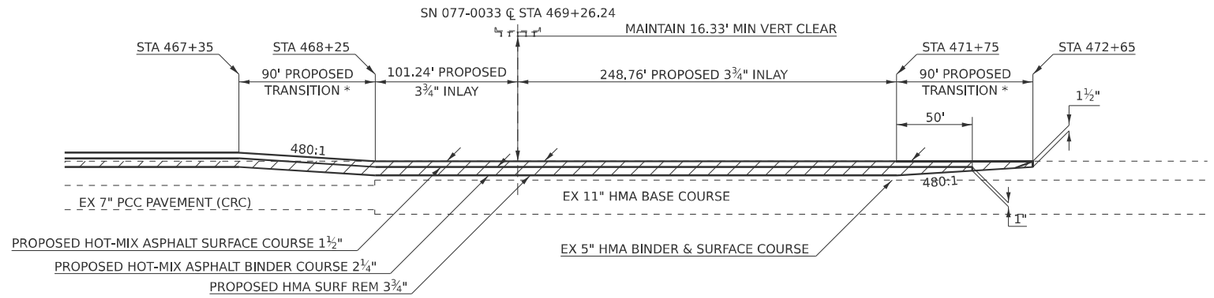

PAVEMENT DETAIL AT PULASKI RD OVERPASS

SOUTHBOUND ONLY

* SEE SPECIAL PROVISIONS (HMA SURFACE REMOVAL, VARIABLE DEPTH)

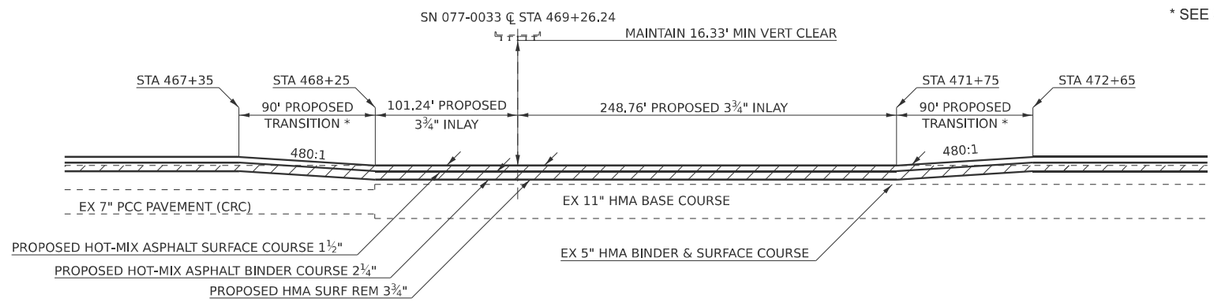

PAVEMENT DETAIL AT OLMSTEAD RD OVERPASS

SOUTHBOUND ONLY

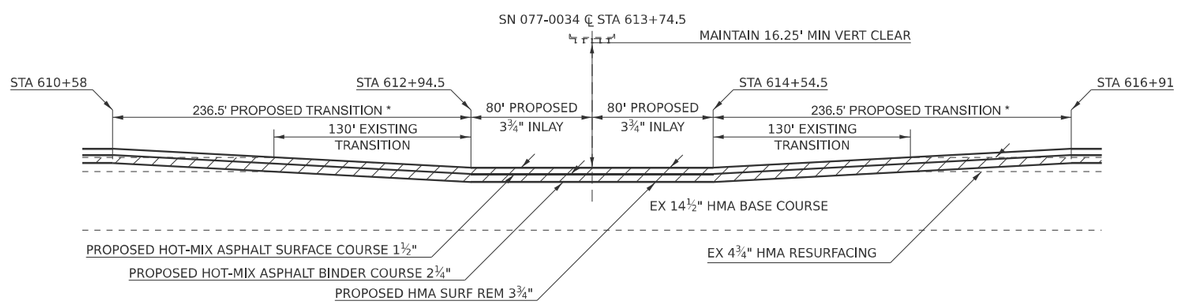

PROPOSED HOT-MIX ASPHALT SURFACE REMOVAL

MODEL: Pavement Detail-2 [Sheet]
FILE NAME: c:\pw_work\pwidot\nathaniel.morris@illinois.gov\d0985771\D978A80-SHTG-Pvmnt_Dtl.dgn

USER NAME = nathaniel.morris	DESIGNED -	REVISED -	
	DRAWN -	REVISED -	
	CHECKED -	REVISED -	
PLOT DATE = 2/11/2025	DATE -	REVISED -	

STATE OF ILLINOIS
DEPARTMENT OF TRANSPORTATION

PAVEMENT DETAILS CONTINUED

SCALE: | SHEET 54 OF 30 SHEETS | STA. | TO STA.

F.A.I RTE.	SECTION	COUNTY	TOTAL SHEETS	SHEET NO.
57	*	PULASKI	103	54
		CONTRACT NO. 78A80		
	ILLINOIS	FED. AID PROJECT		

77(1,1-1,1-2,1-3,2,2-1,3)RS-3;Bridge Repair 25-4

NOT TO SCALE

BUTT JOINT DETAIL AT BRIDGES

NORTHBOUND & SOUTHBOUND

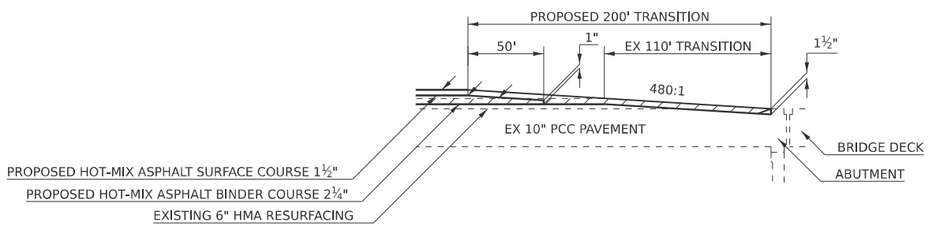

TO BE USED:
LITTLE CREEK BRIDGES: SN 077-0005(6)
CACHE OVERFLOW BRIDGES: SN 077-0013(14)

BUTT JOINT DETAIL AT RAMPS

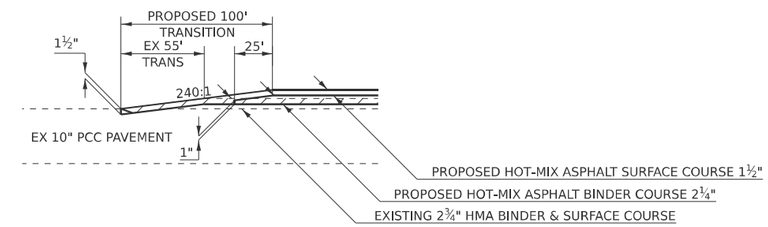

TO BE USED:
RAMP A (NORTHBOUND ENTRANCE)
RAMP D (SOUTHBOUND EXIT)

BUTT JOINT DETAIL AT END OF PROJECT

SOUTHBOUND ONLY

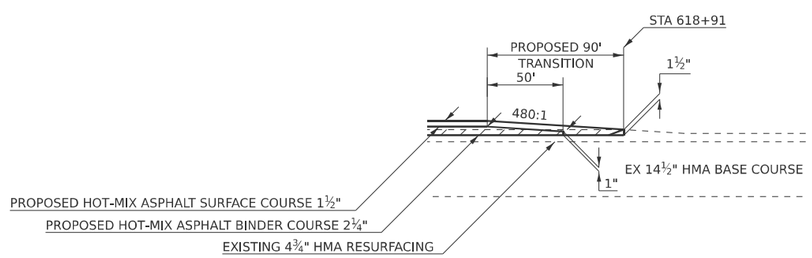

PROPOSED HOT-MIX ASPHALT SURFACE REMOVAL 1½"

BUTT JOINT DETAIL AT RAMPS

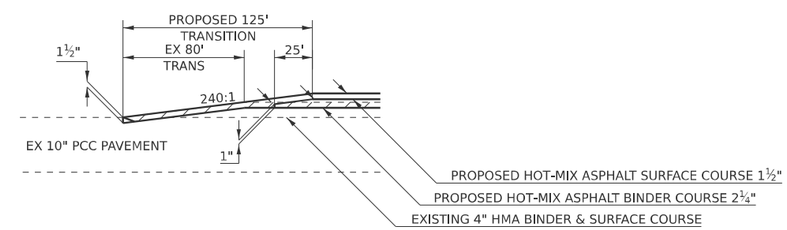

TO BE USED:
RAMP B (NORTHBOUND EXIT)
RAMP C (SOUTHBOUND ENTRANCE)

MODEL: Pavement Detail-3 [Sheet]
FILE NAME: c:\pw_work\pwidot\holleyd\d0385771\D978A80-SHtG-Pvmnt_Dtl.dgn

USER NAME = Brandy.Maes	DESIGNED -	REVISED -	
	DRAWN -	REVISED -	
	CHECKED -	REVISED -	
PLOT DATE = 2/6/2025	DATE -	REVISED -	

STATE OF ILLINOIS
DEPARTMENT OF TRANSPORTATION

BUTT JOINT DETAILS

SCALE: | SHEET 55 OF 30 SHEETS | STA. | TO STA.

F.A.I RTE.	SECTION	COUNTY	TOTAL SHEETS	SHEET NO.
57	*	PULASKI	103	55
		CONTRACT NO. 78A80		
	ILLINOIS	FED. AID PROJECT		

77(1,1-1,1-2,1-3,2,2-1,3)RS-3;Bridge Repair 25-4

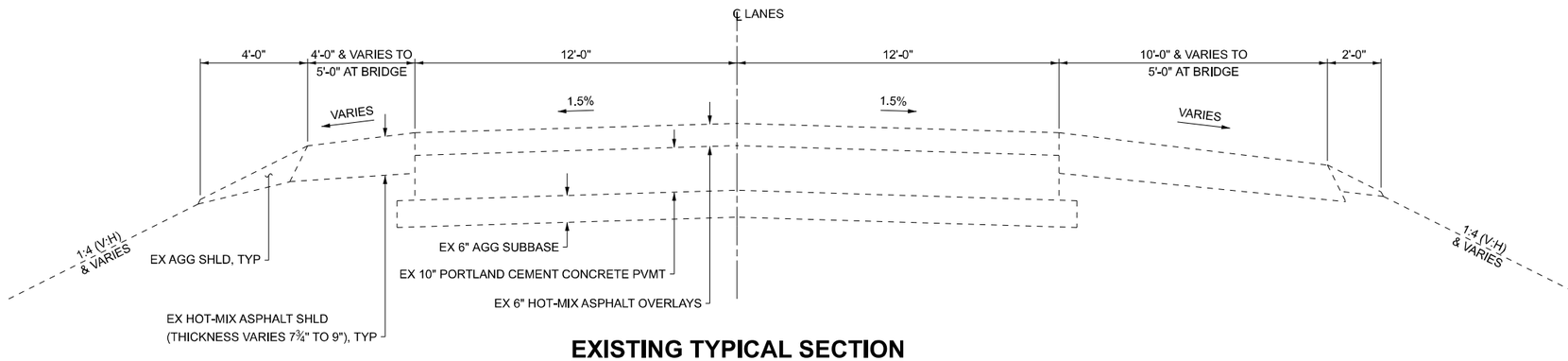

EXISTING TYPICAL SECTION

STA 167+76.00 TO STA 170+44.25 NB
STA 173+43.75 TO STA 176+86.50 NB
STA 167+01.00 TO STA 170+44.25 SB
STA 173+43.75 TO STA 176+11.50 SB

① MATCH EXISTING CROSS SLOPE

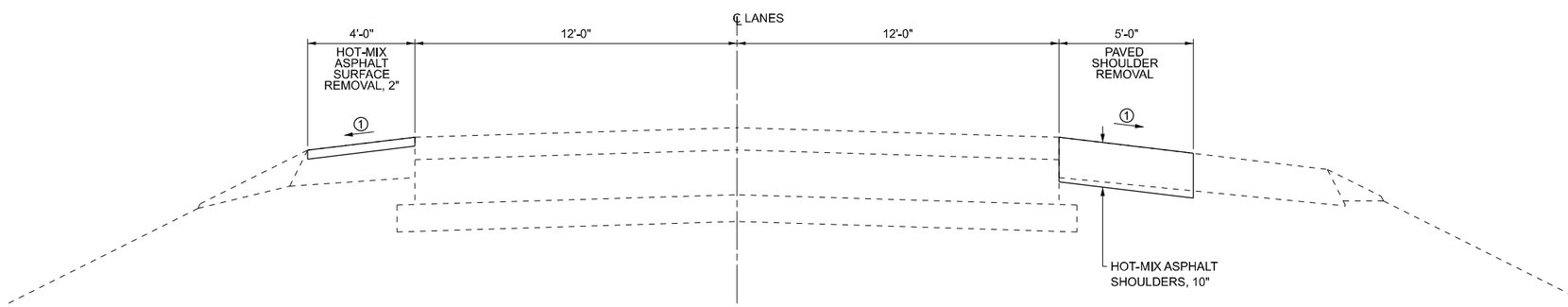

SECTION ① - ①

(FOR STAGE CONSTRUCTION)
STA 167+76.00 TO STA 168+69.25 NB
STA 175+18.75 TO STA 176+11.50 SB

MODEL: Named Boundary Sheet H
FILE NAME: Y:\IDOT\1423-04_78A80\CADD\Highway\CADD Sheets\D978A80-sht-typical01.dgn

ESCA CONSULTANTS, INC.

USER NAME = nhc	DESIGNED - IRC	REVISED -	STATE OF ILLINOIS DEPARTMENT OF TRANSPORTATION
ESCA PROJECT NO. = 1423.04	DRAWN - IRC	REVISED -	
	CHECKED - ELH	REVISED -	
PLOT DATE = 2/3/2025	DATE - 10/24	REVISED -	

ROADWAY SECTIONS AT SN 077-0007/0008

SCALE: NONE | SHEET 1 OF 3 SHEETS | STA. | TO STA.

F.A.I. RTE.	SECTION	COUNTY	TOTAL SHEETS	SHEET NO.
57	D9 BRIDGE REPAIR 25-4	PULASKI	103	56
		CONTRACT NO. 78A80		
		ILLINOIS	FED. AID PROJECT	

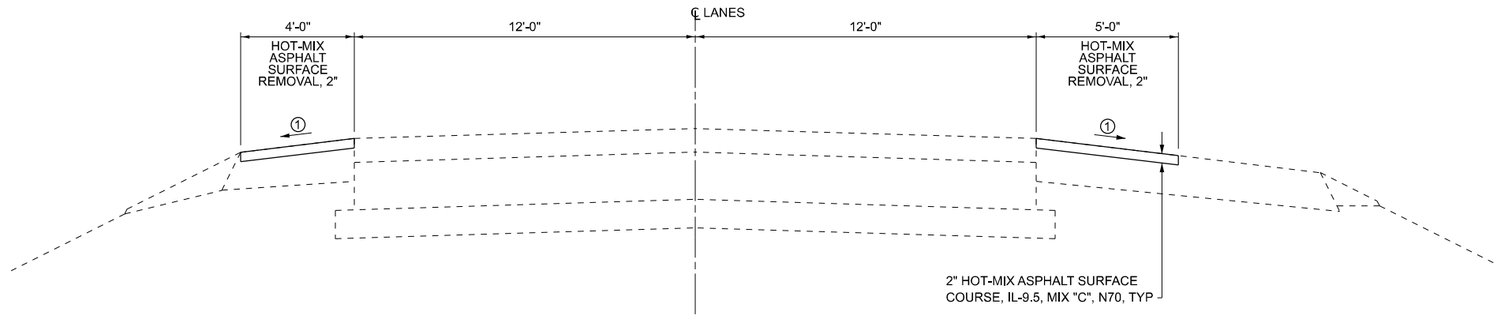

SECTION ② - ②

(FOR STAGE CONSTRUCTION)

STA 168+69.25 TO STA 170+44.25 NB
STA 173+43.75 TO STA 176+86.50 NB
STA 167+01.00 TO STA 170+44.25 SB
STA 173+43.75 TO STA 175+18.75 SB

① MATCH EXISTING CROSS SLOPE

② TRANSITION FROM 2.0% AT BRIDGE APPROACH SLAB TO MATCH PROPOSED SHOULDER AT END OF PAVEMENT CONNECTOR

③ THICKNESS PRIOR TO GRINDING, SEE SN 077-0007/ 0008 BRIDGE PLANS

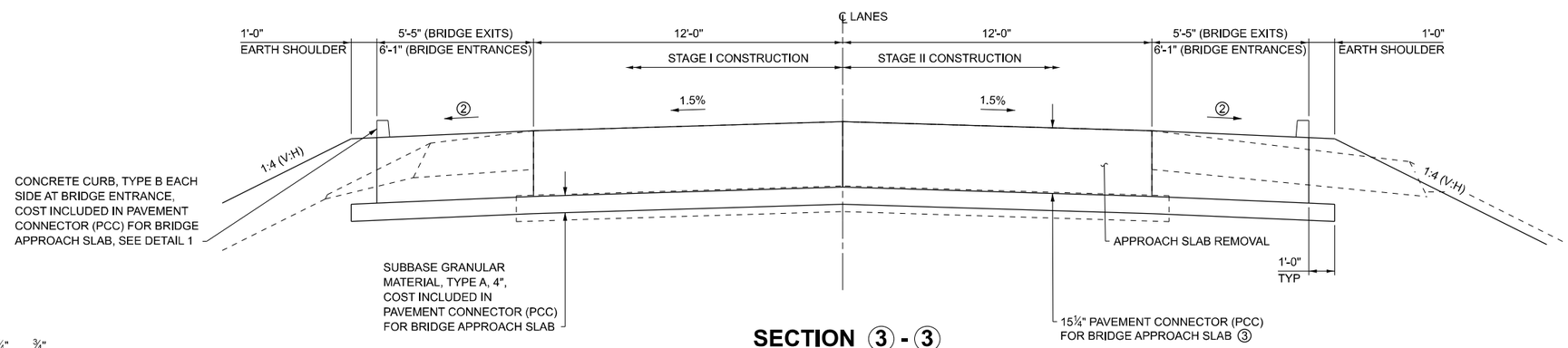

SECTION ③ - ③

STA 170+10.10 TO STA 170+25.10 NB
STA 173+62.90 TO STA 173+77.90 NB
STA 170+10.10 TO STA 170+25.10 SB
STA 173+62.90 TO STA 173+77.90 SB

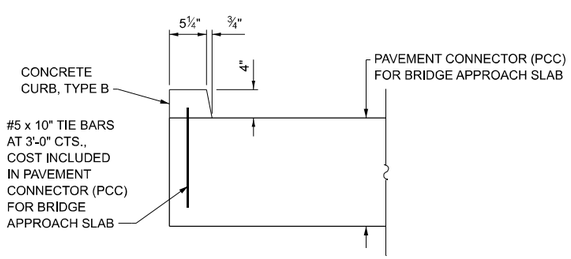

DETAIL 1

MODEL: Named Boundary Sheet H
FILE NAME: Y:\IDOT\1423-04_78A80\CADD\Highway\CADD Sheets\D978A80-sht-typical02.dgn

ESCA CONSULTANTS, INC.	USER NAME = IRC	DESIGNED - IRC	REVISED -
	ESCA PROJECT NO. = 1423.04	DRAWN - IRC	REVISED -
		CHECKED - ELH	REVISED -
	PLOT DATE = 10/30/2024	DATE - 10/24	REVISED -

STATE OF ILLINOIS
DEPARTMENT OF TRANSPORTATION

ROADWAY SECTIONS AT SN 077-0007/0008

SCALE: NONE | SHEET 2 OF 3 SHEETS | STA. | TO STA.

F.A.I. RTE.	SECTION	COUNTY	TOTAL SHEETS	SHEET NO.
57	D9 BRIDGE REPAIR 25-4	PULASKI	103	57
		CONTRACT NO. 78A80		
		ILLINOIS FED. AID PROJECT		

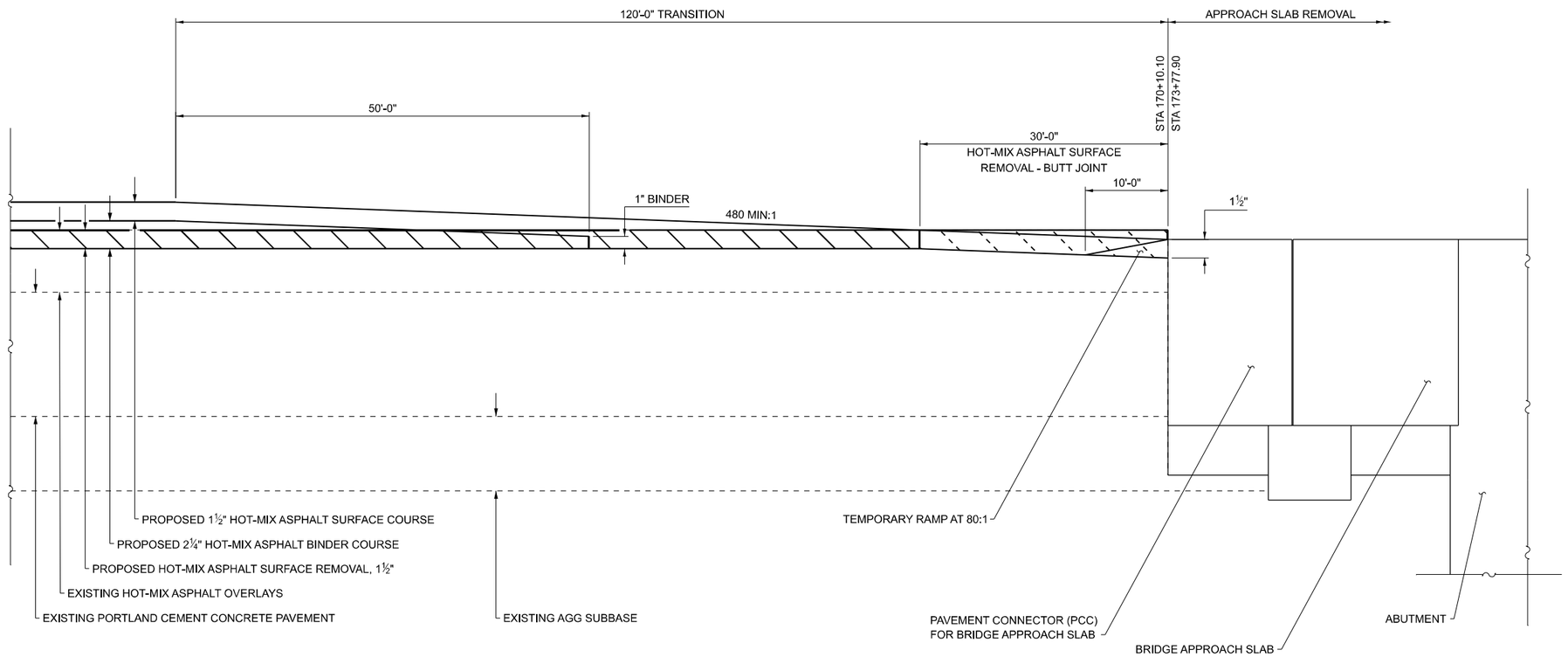

SECTION ④ - ④
LONGITUDINAL TYPICAL SECTION

NOT TO SCALE

MODEL: Named Boundary Sheet H
FILE NAME: Y:\IDOT\1423-04_78A80\CADD\Highway\CADD Sheets\D978A80-sht-typical03.dgn

ESCA CONSULTANTS, INC.

USER NAME = IRC	DESIGNED - IRC	REVISED -	
ESCA PROJECT NO. = 1423.04	DRAWN - IRC	REVISED -	
	CHECKED - ELH	REVISED -	
PLOT DATE = 10/30/2024	DATE - 09/24	REVISED -	

STATE OF ILLINOIS
DEPARTMENT OF TRANSPORTATION

ROADWAY SECTIONS AT SN 077-0007/0008

SCALE: NONE | SHEET 3 OF 3 SHEETS | STA. | TO STA.

F.A.I. RTE.	SECTION	COUNTY	TOTAL SHEETS	SHEET NO.
57	D9 BRIDGE REPAIR 25-4	PULASKI	103	58
		CONTRACT NO. 78A80		
		ILLINOIS	FED. AID PROJECT	

LEGEND

0 20 40
SCALE IN FEET

2" HOT-MIX ASPHALT SURFACE COURSE, IL-9.5, MIX "C", N70

HOT-MIX ASPHALT SHOULDERS, 10"

PAVEMENT CONNECTOR (PCC) FOR BRIDGE APPROACH SLAB

CONCRETE SUPERSTRUCTURE (APPROACH SLAB)

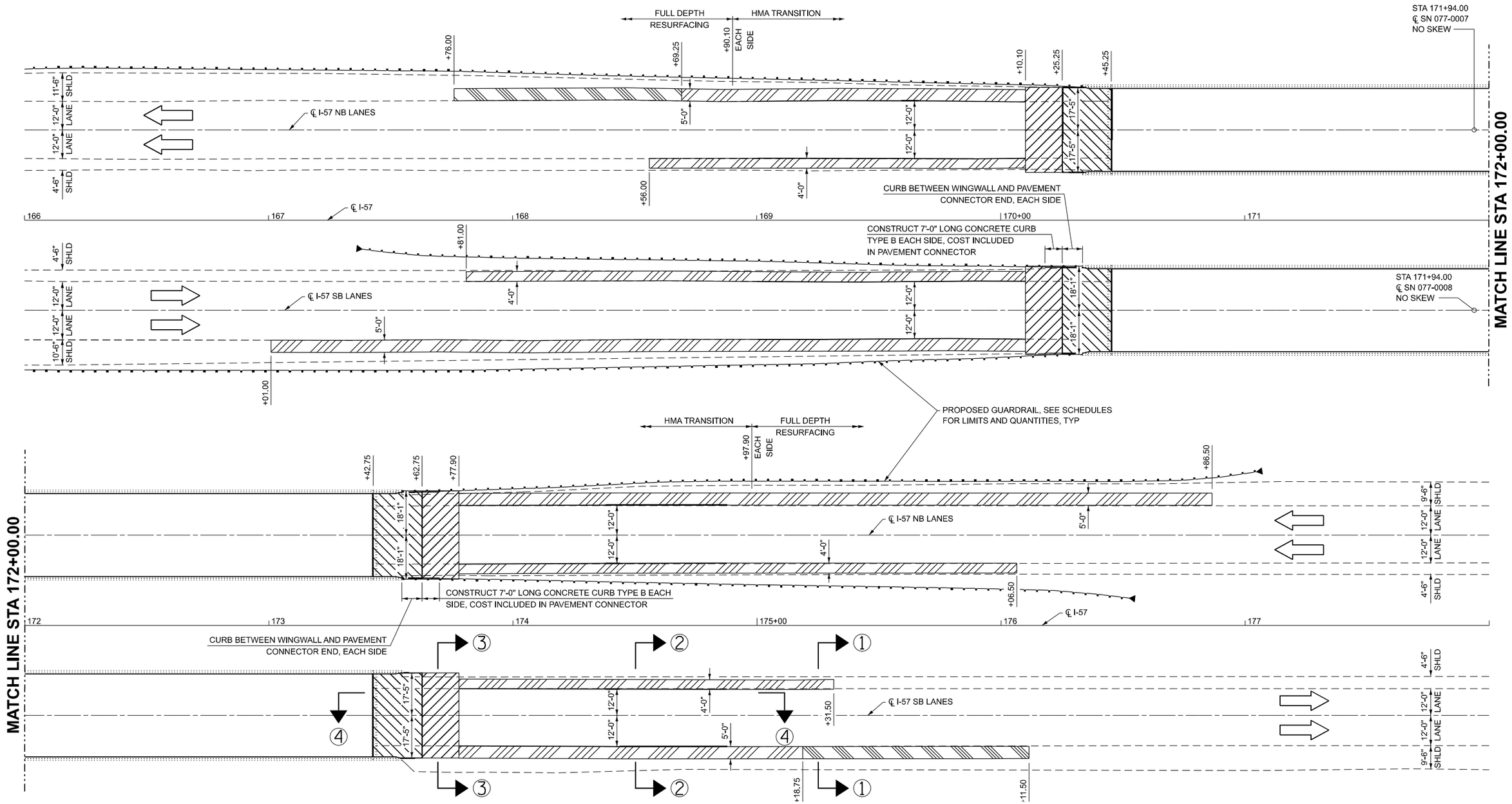

MODEL: Named Boundary Sheet H
FILE NAME: Y:\IDOT\1423-04_78A80\CADD\Highway\CADD Sheets\D978A80-sht-plan01.dgn

ESCA CONSULTANTS, INC.

USER NAME = IRC	DESIGNED - IRC	REVISED -	
ESCA PROJECT NO. = 1423.04	DRAWN - IRC	REVISED -	
	CHECKED - ELH	REVISED -	
PLOT DATE = 10/30/2024	DATE - 10/24	REVISED -	

STATE OF ILLINOIS
DEPARTMENT OF TRANSPORTATION

ROADWAY PLAN AT SN 077-0007/0008

SCALE: 1" =20' | SHEET 1 OF 1 SHEETS | STA. 166+00 TO STA. 178+00

F.A.I. RTE.	SECTION	COUNTY	TOTAL SHEETS	SHEET NO.
57	D9 BRIDGE REPAIR 25-4	PULASKI	103	59
		CONTRACT NO. 78A80		
		ILLINOIS FED. AID PROJECT		

LEGEND

0 20 40
SCALE IN FEET

HOT-MIX ASPHALT SURFACE REMOVAL, 2"

PAVED SHOULDER REMOVAL

APPROACH SLAB REMOVAL

HOT-MIX ASPHALT SURFACE REMOVAL - BUTT JOINT

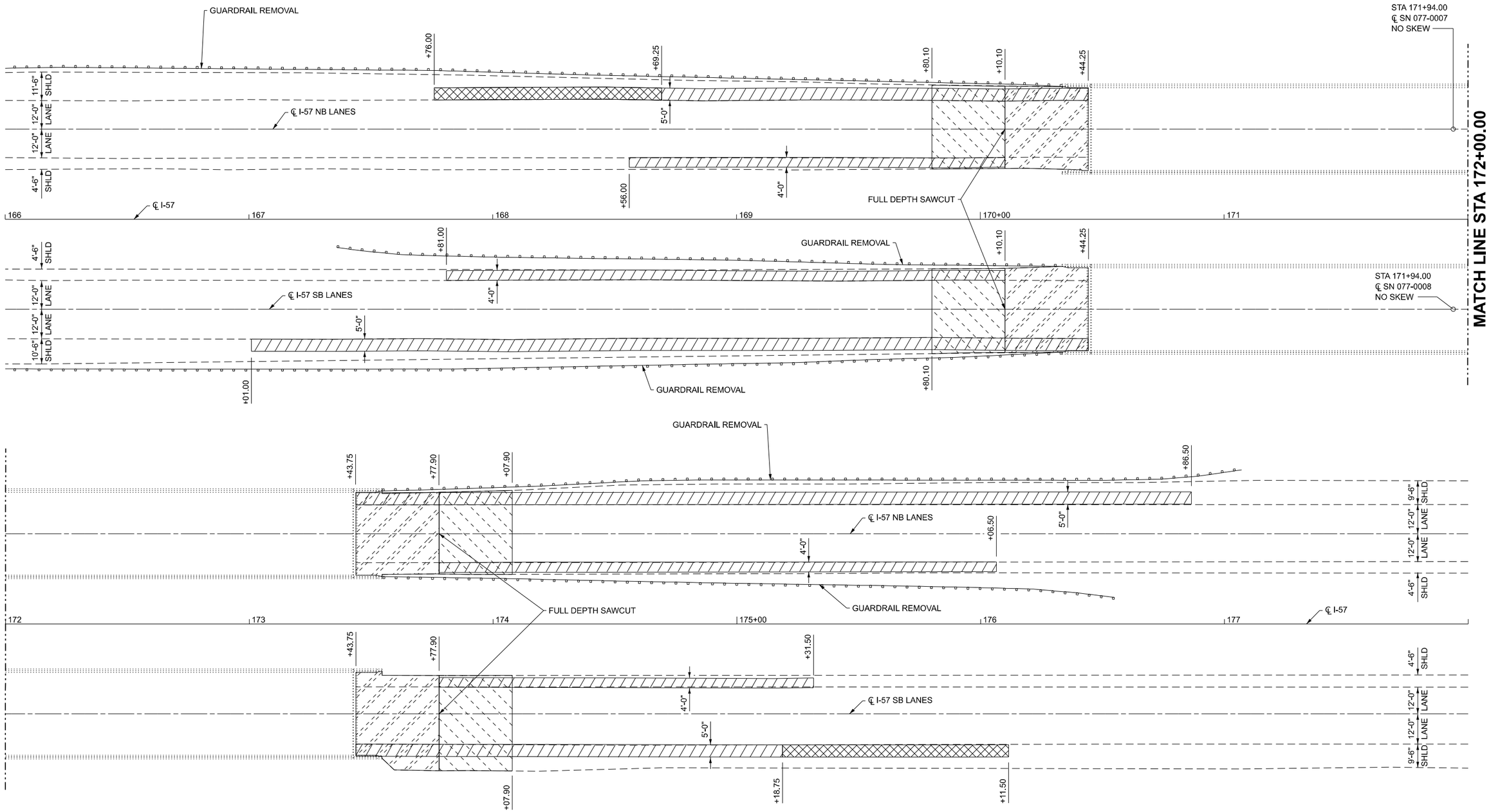

MODEL: Named Boundary Sheet H
FILE NAME: Y:\IDOT\1423-04_78A80\CADD\Highway\CADD Sheets\D978A80-sht-rem01.dgn

ESCA CONSULTANTS, INC.

USER NAME = IRC	DESIGNED - IRC	REVISED -	
ESCA PROJECT NO. = 1423.04	DRAWN - IRC	REVISED -	
	CHECKED - ELH	REVISED -	
PLOT DATE = 10/30/2024	DATE - 10/24	REVISED -	

STATE OF ILLINOIS
DEPARTMENT OF TRANSPORTATION

REMOVAL PLAN AT SN 077-0007/0008

SCALE: 1" =20' | SHEET 1 OF 1 SHEETS | STA. 166+00 TO STA. 178+00

F.A.I. RTE.	SECTION	COUNTY	TOTAL SHEETS	SHEET NO.
57	D9 BRIDGE REPAIR 25-4	PULASKI	103	60
		CONTRACT NO. 78A80		
		ILLINOIS	FED. AID PROJECT	

LEGEND

0 40 80
SCALE IN FEET

2" HOT-MIX ASPHALT SURFACE COURSE, IL-9.5, MIX "C", N70

HOT-MIX ASPHALT SHOULDERS, 10"

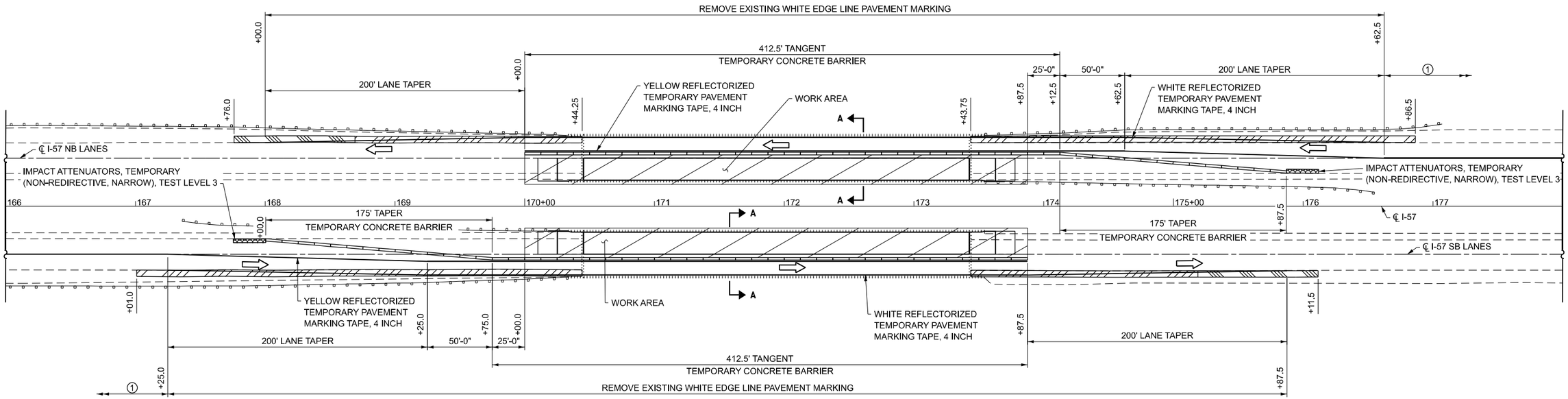

1 REMOVE 1500' OF EXISTING WHITE SKIP DASH CENTERLINE PAVEMENT MARKING

STAGE I PLAN

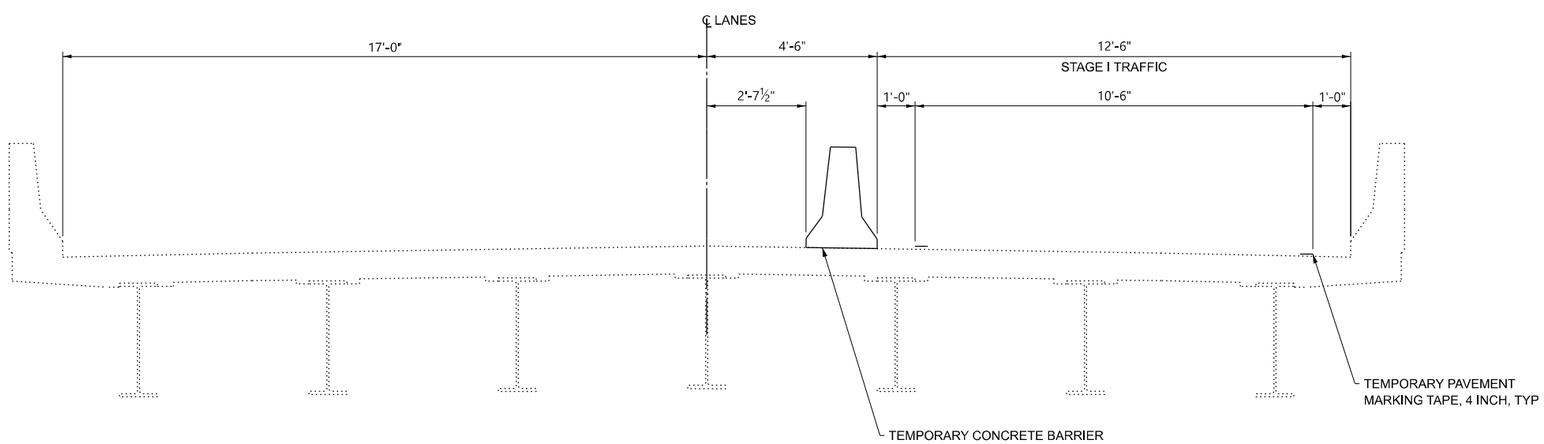

SECTION A-A

NOT TO SCALE

STAGE I GENERAL NOTES

SEE HIGHWAY STANDARD 701402 FOR ADDITIONAL INFORMATION AND DETAILS.

MODEL: Named Boundary Sheet H
FILE NAME: Y:\IDOT\1423-04_78A80\CADD\Highway\CADD Sheets\D978A80-sht-staging01.dgn

ESCA CONSULTANTS, INC.

USER NAME = nhc	DESIGNED - IRC	REVISED -	STATE OF ILLINOIS DEPARTMENT OF TRANSPORTATION
ESCA PROJECT NO. = 1423.04	DRAWN - IRC	REVISED -	
	CHECKED - ELH	REVISED -	
PLOT DATE = 2/3/2025	DATE - 10/24	REVISED -	

TRAFFIC CONTROL AND PROTECTION, STANDARD 701402
STAGE I AT SN 077-0007/0008

SCALE: AS SHOWN | SHEET 1 OF 1 SHEETS | STA. 166+00 TO STA. 178+00

F.A.I. RTE.	SECTION	COUNTY	TOTAL SHEETS	SHEET NO.
57	D9 BRIDGE REPAIR 25-4	PULASKI	103	61
		CONTRACT NO. 78A80		
		ILLINOIS FED. AID PROJECT		

LEGEND

0 40 80
SCALE IN FEET

2" HOT-MIX ASPHALT SURFACE COURSE, IL-9.5, MIX "C", N70

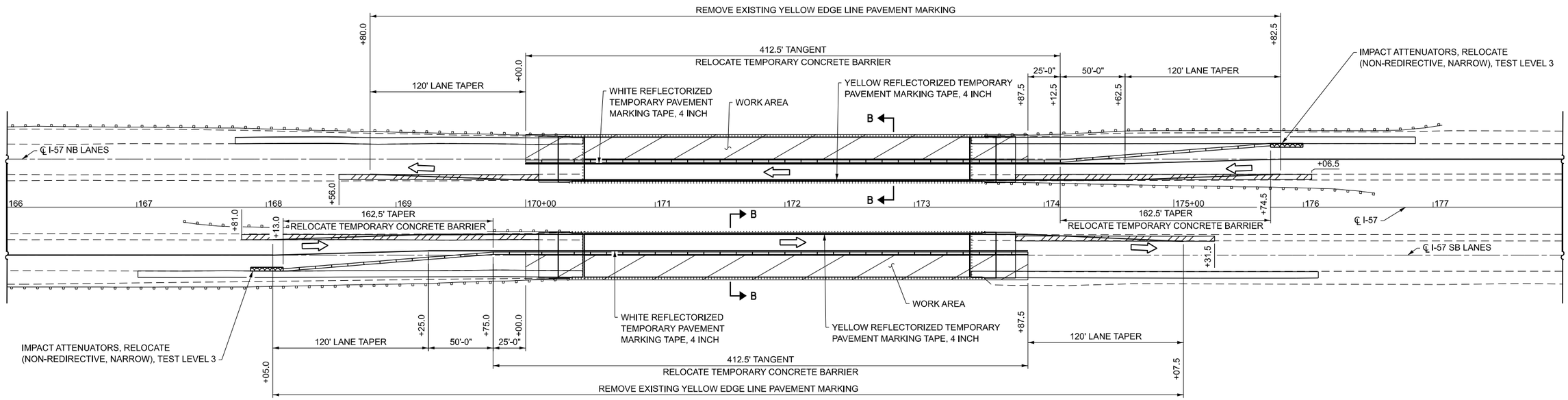

STAGE II PLAN

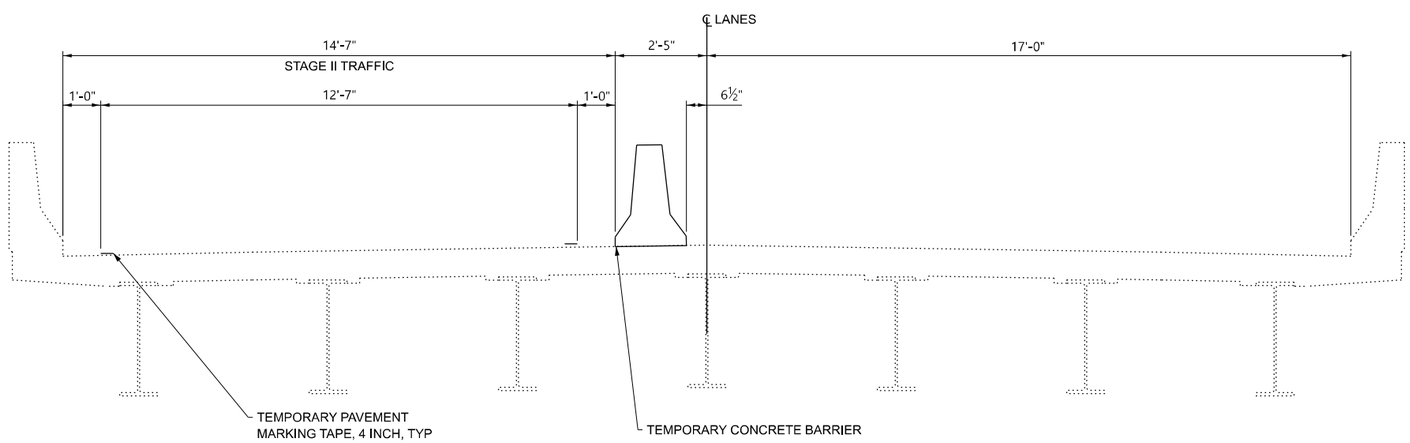

SECTION B-B

NOT TO SCALE

STAGE II GENERAL NOTES

SEE HIGHWAY STANDARD 701402 FOR ADDITIONAL INFORMATION AND DETAILS.

MODEL: Named Boundary Sheet H
FILE NAME: Y:\IDOT\1423-04_78A80\CADD\Highway\CADD Sheets\D978A80-sht-staging02.dgn

ESCA CONSULTANTS, INC.

USER NAME = IRC	DESIGNED - IRC	REVISED -	
ESCA PROJECT NO. = 1423.04	DRAWN - IRC	REVISED -	
	CHECKED - ELH	REVISED -	
PLOT DATE = 10/30/2024	DATE - 10/24	REVISED -	

STATE OF ILLINOIS
DEPARTMENT OF TRANSPORTATION

TRAFFIC CONTROL AND PROTECTION, STANDARD 701402
STAGE II AT SN 077-0007/0008

SCALE: AS SHOWN | SHEET 1 OF 1 SHEETS | STA. 166+00 TO STA. 178+00

F.A.I. RTE.	SECTION	COUNTY	TOTAL SHEETS	SHEET NO.
57	D9 BRIDGE REPAIR 25-4	PULASKI	103	62
		CONTRACT NO. 78A80		
		ILLINOIS	FED. AID PROJECT	

SIGN LEGEND

①

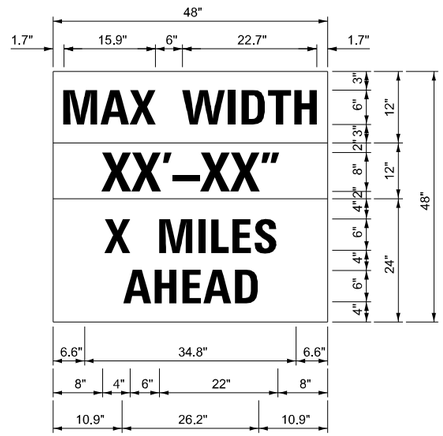

W12-I103

W12-I103 (WIDTH IS 8D);
NO BORDER, BLACK ON WHITE; "MAX WIDTH" D;
NO BORDER, BLACK ON ORANGE; "XX'-XX"" D;
NO BORDER, BLACK ON WHITE; "X MILES" D; "AHEAD" D

②

M3-1 & M1-1

③

M3-3 & M1-1

NOTES

1. THE CONTRACTOR SHALL FURNISH THE POSTS AND ERECT THE SIGNS AT THE LOCATIONS AS DIRECTED BY THE ENGINEER. ALL SIGNS SHALL BE POST MOUNTED.
2. THE ABOVE NOTED WORK, INCLUDING SIGNS, POST, HARDWARE AND LABOR SHALL BE INCLUDED IN THE CONTRACT UNIT PRICE, EACH, FOR TRAFFIC CONTROL AND PROTECTION, STANDARD 701402 AND NO OTHER COMPENSATION WILL BE ALLOWED.
3. FOR WORK ON ALL STRUCTURES, THE WIDTH SHOWN ON THE W12-I103 SIGN SHALL BE 11'-0" FOR STAGE I AND 13'-1" FOR STAGE II OR AS DIRECTED BY THE ENGINEER. THE "X" MILES AHEAD WILL BE DETERMINED BY THE ENGINEER.

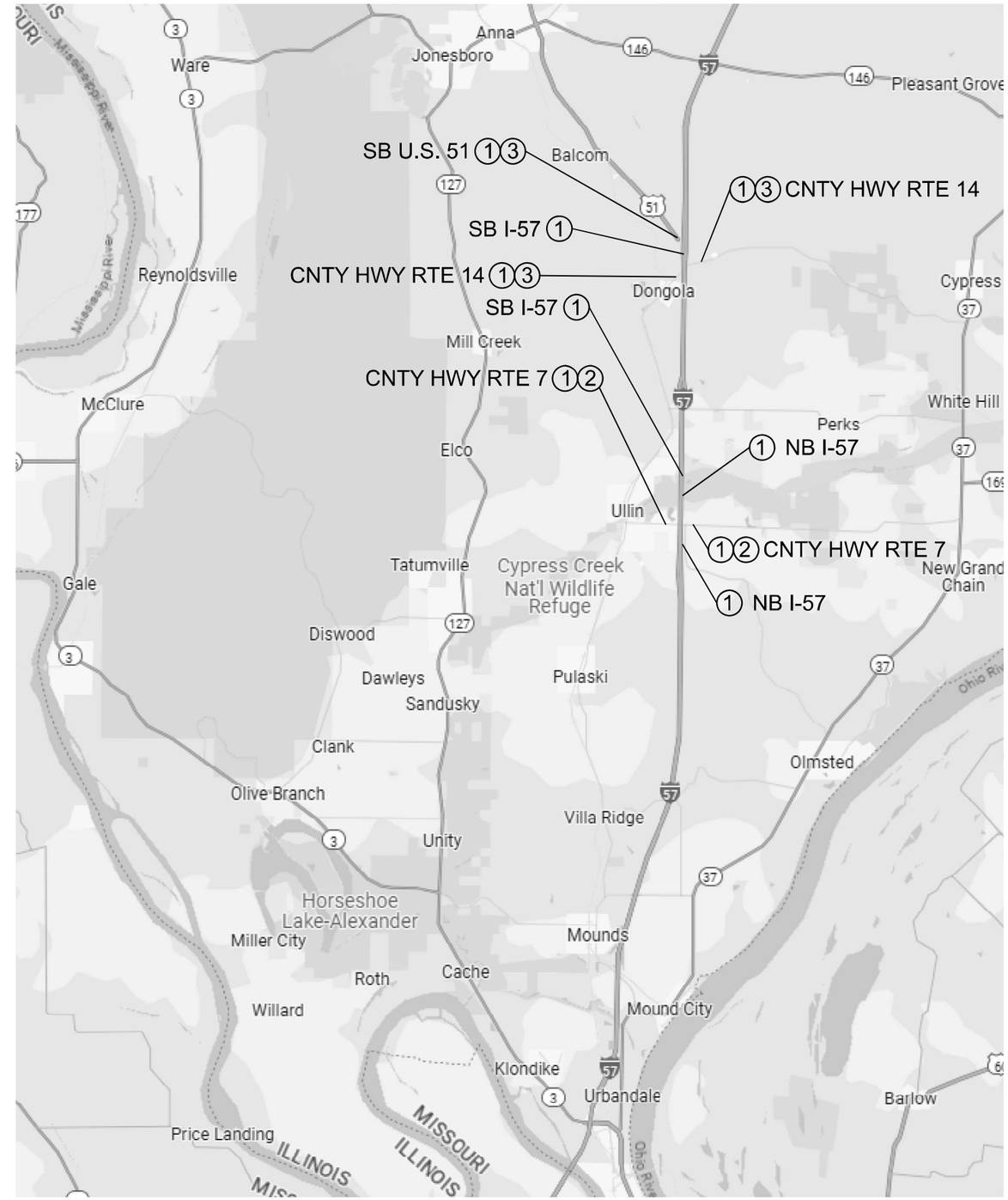

WIDTH RESTRICTION SIGNING PLAN

MODEL: Named Boundary Sheet
FILE NAME: Y:\IDOT\11423-04_78A80\CADD\Highway\CADD Sheets\D978A80-sht-detail01.dgn

ESCA CONSULTANTS, INC.	USER NAME = IRC	DESIGNED - IRC	REVISED -	STATE OF ILLINOIS DEPARTMENT OF TRANSPORTATION	WIDTH RESTRICTION SIGNING PLAN	F.A.I. RTE.	SECTION	COUNTY	TOTAL SHEETS / SHEET NO.
	ESCA PROJECT NO. = 1423.04	DRAWN - IRC	REVISED -			57	D9 BRIDGE REPAIR 25-4	PULASKI	103 / 63
		CHECKED - ELH	REVISED -					CONTRACT NO. 78A80	
	PLOT DATE = 10/31/2024	DATE - 10/24	REVISED -		SCALE: NONE / SHEET 1 OF 1 SHEETS / STA. / TO STA.		ILLINOIS	FED. AID PROJECT	

EXISTING STRUCTURE:
The existing four-span continuous steel multi-beam structures were constructed in 1964 as F.A.I. 57 Section 77-1B-1 at Station 171+94.00. SN 077-0007 carries I-57 Northbound over Cache River Overflow. SN 077-0008 carries I-57 Southbound over Cache River Overflow. In 1986, the safety walks and handrails were replaced with concrete parapets, and the expansion joints and wingwall end posts were replaced. In 1994, the abutments caps were widened, and the bearings were replaced. In 2003, the expansion joints were replaced, and microsilica concrete overlays were added. The concrete stub abutments are supported on metal shell piles, and the piers are supported on creosoted timber piles. Each bridge is 299'-6" back-to-back of abutments. The superstructures are 36'-10" out-to-out. There is no skew.

The proposed project consists of eliminating the expansion joints at the abutments, constructing new reinforced concrete overlays, bridge deck repairs, structural steel repairs, new bearings at the abutments, and new concrete approaches. Traffic is to be maintained utilizing stage construction.

SCOPE OF WORK

1. Remove existing ±6" concrete wearing surface and Perform Bridge Deck Scarification.
2. Perform Deck Slab Repair.
3. Replace bearings at abutments.
4. Remove steel diaphragms at abutments.
5. Perform structural steel repair. Clean and paint steel beam ends at each abutment for concrete encasement.
6. Remove existing abutment backwalls and convert stub abutments to semi-integral abutments.
7. Construct reinforced concrete wearing surface.
8. Remove and replace bridge approach slabs.
9. Perform Diamond Grinding (Bridge Section).
10. Perform Bridge Deck Grooving (Longitudinal).
11. Apply Protective Coat.

STRUCTURE INDEX OF SHEETS

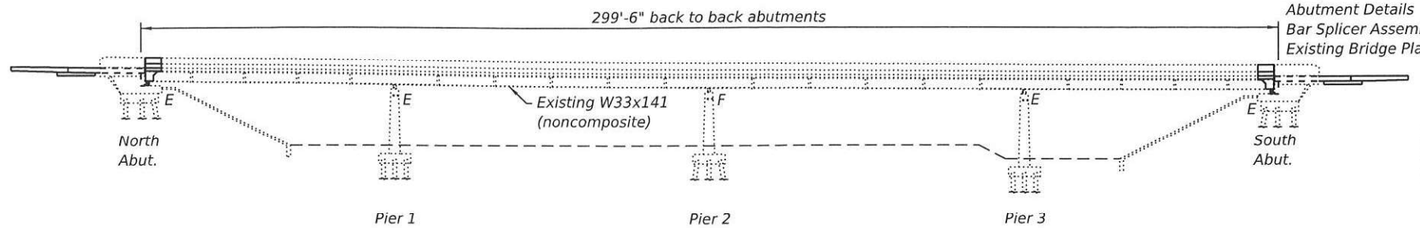

ELEVATION

DESIGN SPECIFICATIONS (new const.)

2002 AASHTO Standard Specifications for Highway Bridges, 17th Edition

LOADING HS20-44 & ALTERNATE (new const.)

No allowance for future wearing surface

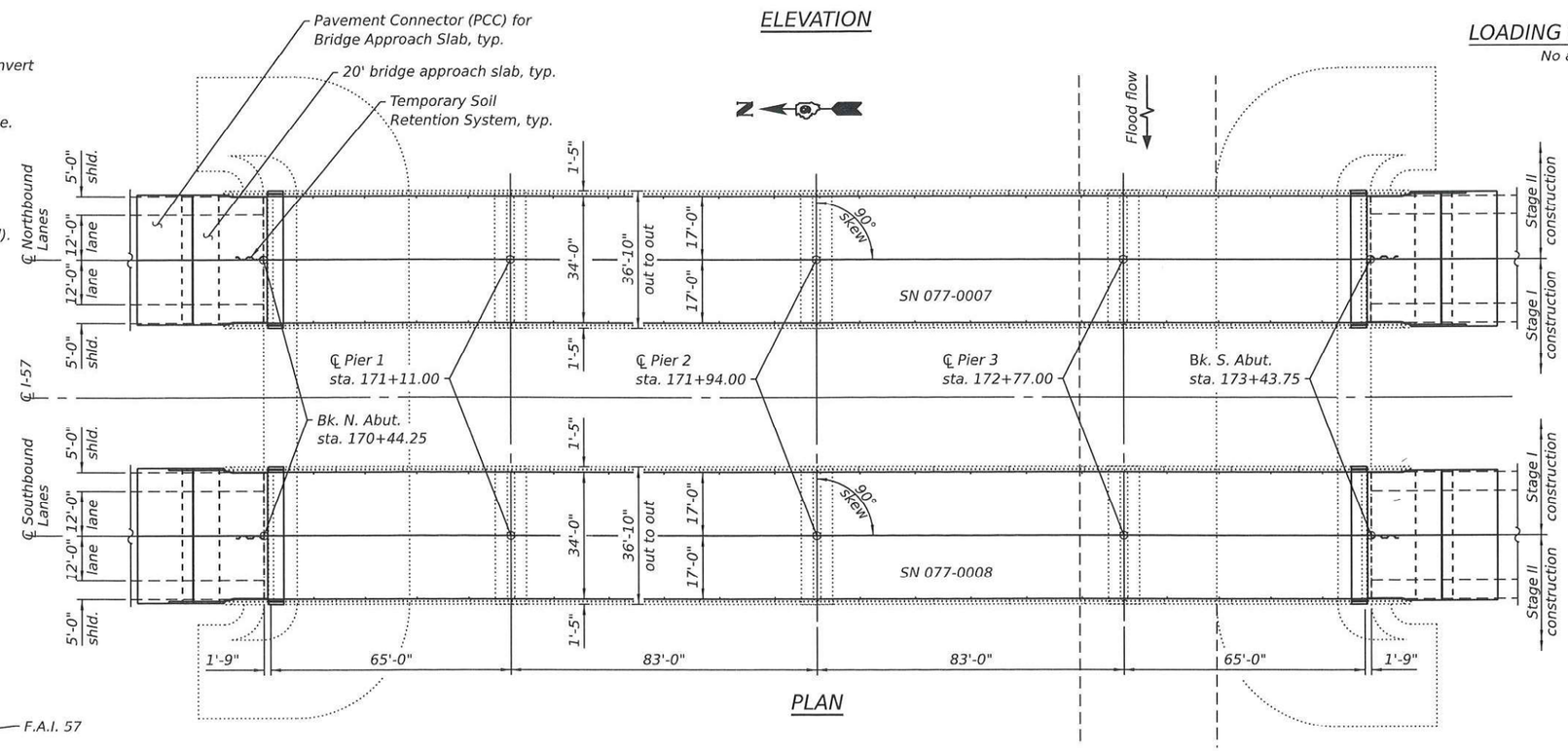

PLAN

DESIGN STRESSES

FIELD UNITS

EXISTING CONSTRUCTION

f'c = 3,500 psi (parapets, end posts, and expansion joints)
fy = 60,000 psi (parapets, end posts, and expansion joints reinforcement)
fc = 1,400 psi (superstructure and substructure unless noted otherwise)
fs = 20,000 psi (reinforcement unless noted otherwise)
fs = 18,000 psi (structural)

NEW CONSTRUCTION

f'c = 4,000 psi (concrete)
fy = 60,000 psi (reinforcement)
fy = 36,000 psi (structural)

STATE OF ILLINOIS
ERIC L. HENKE
No. 081-006159
LICENSED STRUCTURAL ENGINEER

EXPIRES 11-30-26

SIGNATURE

02-03-25
DATE

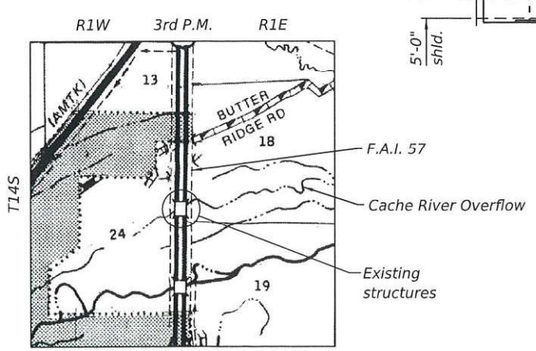

LOCATION SKETCH

GENERAL PLAN & ELEVATION
I-57 OVER CACHE RIVER OVERFLOW
F.A.I. ROUTE 57
SECTION D9 BRIDGE REPAIR 25-4
PULASKI COUNTY
STATION 171+94.00
STRUCTURE NO. 077-0007/0008

ESCA CONSULTANTS, INC.

USER NAME =	DESIGNED - ELH 08/24	REVISED -	STATE OF ILLINOIS DEPARTMENT OF TRANSPORTATION		
ESCA PROJECT NO.= 1423.04	CHECKED - ARD 10/24	REVISED -			
PLOT SCALE =	DRAWN - NHC 10/24	REVISED -			
PLOT DATE =	CHECKED - ELH 10/24	REVISED -		SHEET 1 OF 39 SHEETS	

F.A.I. RTE.	SECTION	COUNTY	TOTAL SHEETS	SHEET NO.
57	D9 BRIDGE REPAIR 25-4	PULASKI	103	64
		CONTRACT NO. 78A80		
		ILLINOIS FED. AID PROJECT		

MODEL: Sheet
FILE NAME: Y:\IDOT\1423-04_78A80\CADD\SP SN 077-0007_0008\0770007-78A80-01-GenPlan.dgn
2/3/2025 11:30:28 AM

GENERAL NOTES

1. Reinforcement bars designated (E) shall be epoxy coated.

2. Plan dimensions and details relative to the existing structure have been taken from existing plans and are subject to nominal construction variations. The Contractor shall field verify existing dimensions and details affecting new construction and make necessary approved adjustments prior to construction or ordering of materials. Such variations shall not be cause for additional compensation for a change in scope of work; however, the Contractor will be paid for the quantity actually furnished at the unit price bid for the work.

3. Existing reinforcement bars extending into the removal area shall be cleaned, straightened, and incorporated into the new construction. Any reinforcement bars that are damaged during concrete removal shall be replaced with an approved bar splicer or anchorage system. Cost included in Concrete Removal.

4. Areas of deck repairs shown are estimated. The Engineer shall show actual locations and size of deck repairs on As-Built Plans.

5. The existing structural steel coating contains lead. The Contractor shall take appropriate precautions to address the presence of lead on this project.

6. Prior to pouring the new concrete deck, all heavy or loose rust, loose mill scale, and other loose detrimental foreign material shall be removed from the surfaces in contact with concrete (SSPC-SP3 standards). Tightly adhered paint may remain unless otherwise noted. Removal shall be accomplished by methods that will not damage the steel and the cost will be included in Concrete Removal.

7. Cleaning and painting of the existing structural steel shall be as specified in the special provision for "Cleaning and Painting Existing Steel Structures." All beams and other structural steel within 10'-0" from the beam end (measured along the beam) shall be cleaned per Near White Blast Cleaning - SSPC-SP10. All remaining surfaces of fascia beams shall be cleaned per Near White Blast Cleaning - SSPC-SP10.

8. The designated areas cleaned per Near White Blast Cleaning shall be painted according to the requirements of the Organic Zinc-Rich Primer/Epoxy Intermediate Coat/Urethane Topcoat paint system. The color of the final finish coat for all interior steel surfaces shall be Gray, Munsell No. 5B 7/1. The color of the final finish coat for the exterior surfaces and bottom flange of the fascia beams shall be Green, Munsell No. 7.5G 4/8.

9. SSPC QP1 and SSPC QP2 Certifications are required for this Contract.

10. All new structural steel extensions, bearing assemblies, and shim plates shall be hot dip galvanized. See special provision for "Hot Dip Galvanizing for Structural Steel."

11. Protective Coat shall be applied to areas of Concrete Superstructure consisting of the front faces and tops of the parapets and wingwalls. Protective Coat shall also be applied to the tops of the new concrete overlays, bridge approach slabs, concrete connector pavements, and tops and inside faces of curbs.

12. The existing name plates and structure number signs are located within the limits of concrete removal at the bridge parapets. The name plates and signs shall be cleaned and re-installed in the bridge parapet reconstruction. Cost is included in Concrete Superstructure.

13. Structure number 077-0007 is referred to as Bridge No. 1. Structure number 077-0008 is referred to as Bridge No. 2.

14. Up to ¼ inch to be ground off the proposed concrete overlays, bridge approach slabs, and concrete pavement connectors.

TOTAL BILL OF MATERIAL

ITEM	UNIT	SN 077-0007	SN 077-0008	TOTAL
Concrete Removal	Cu. Yd.	28.4	28.2	56.6
Structure Excavation	Cu. Yd.	70	70	140
Concrete Structures	Cu. Yd.	24.0	24.0	48.0
Concrete Superstructure	Cu. Yd.	37.2	37.2	74.4
Protective Coat	Sq. Yd.	1,401	1,401	2,802
Concrete Superstructure (Approach Slab)	Cu. Yd.	64.7	64.7	129.4
Furnishing and Erecting Structural Steel	Pound	2,305	2,305	4,610
Reinforcement Bars, Epoxy Coated	Pound	44,270	44,270	88,540
Bar Splicers	Each	569	569	1,138
Elastomeric Bearing Assembly, Type I	Each	14	14	28
Anchor Bolts, 1"	Each	28	28	56
Temporary Soil Retention System	Sq. Ft.	56	56	112
Granular Backfill for Structures	Cu. Yd.	60	60	120
Geocomposite Wall Drain	Sq. Yd.	20	20	40
Pipe Underdrains for Structures 4"	Foot	154	154	308
Bridge Deck Grooving (Longitudinal)	Sq. Yd.	980	980	1,960
Concrete Wearing Surface (Variable Depth)	Sq. Yd.	1,092	1,092	2,184
Concrete Wearing Surface Removal	Sq. Yd.	1,123	1,123	2,246
Bar Terminators	Each	276	276	552
Jack and Remove Existing Bearings	Each	14	14	28
Structural Steel Removal	Pound	2,360	2,360	4,720
Structural Steel Repair	Pound	462	750	1,212
Containment and Disposal of Lead Paint Cleaning Residues No. 1	L Sum	1		1
Containment and Disposal of Lead Paint Cleaning Residues No. 2	L Sum		1	1
Cleaning and Painting Steel Bridge No. 1	L Sum	1		1
Cleaning and Painting Steel Bridge No. 2	L Sum		1	1
Bridge Deck Scarification ½"	Sq. Yd.	1,092	1,092	2,184
Structural Repair of Concrete (Depth Equal to or Less Than 5 Inches)	Sq. Ft.	16	26	42
Deck Slab Repair (Full Depth, Type I)	Sq. Yd.		1	1
Deck Slab Repair (Full Depth, Type II)	Sq. Yd.	9	10	19
Diamond Grinding (Bridge Section)	Sq. Yd.	1,232	1,232	2,464

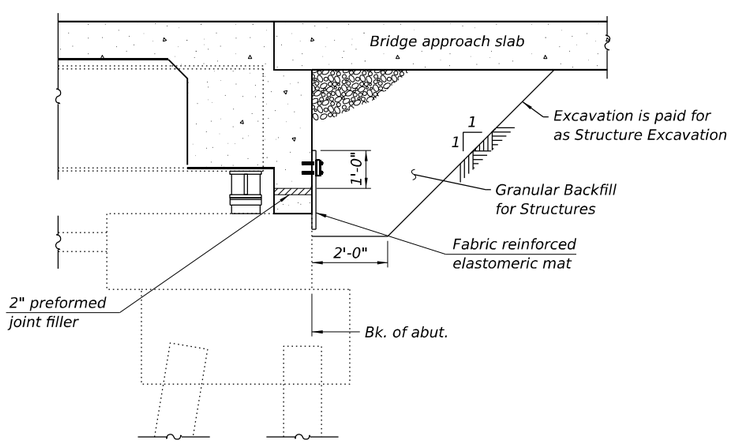

SECTION THRU SEMI-INTEGRAL ABUTMENT

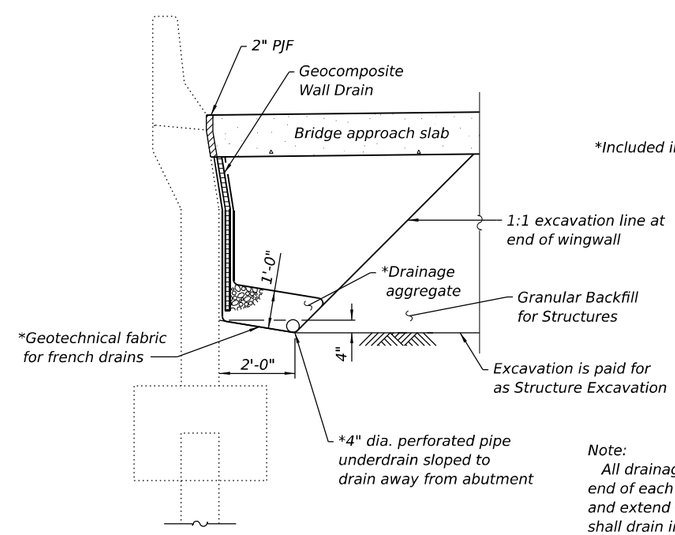

*Included in the cost of Pipe Underdrains for Structures, 4"

SECTION THRU ABUTMENT WINGWALL

Note:
All drainage system components shall extend to 2'-0" from the end of each wingwall except an outlet pipe shall wrap around and extend until intersecting with the side slope. The outside pipes shall drain into concrete headwalls. (See Article 601.05 of the Standard Specifications and Highway Standard 601101). The median pipes shall drain onto the existing concrete slope walls. The existing concrete slope wall shall be sawcut, removed, and replaced at the pipe outlets, cost included in Pipe Underdrains for Structures, 4".

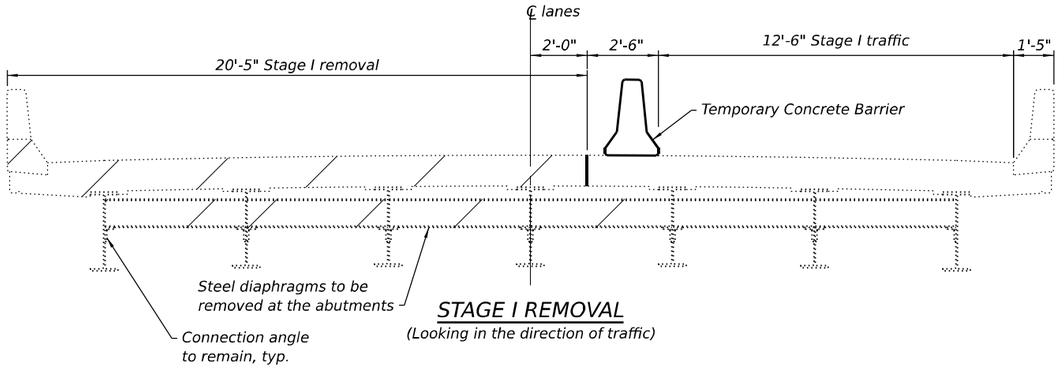

STAGE I REMOVAL
(Looking in the direction of traffic)

Stage Construction Notes:
Hatched area indicate Concrete Removal and Structural Steel Removal at abutments.

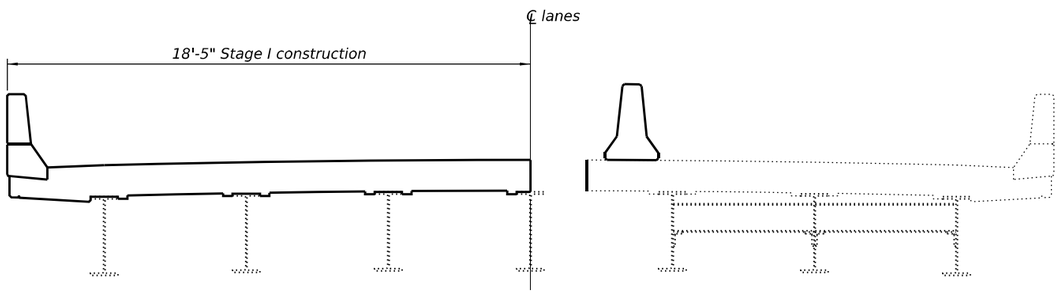

STAGE I CONSTRUCTION
(Looking in the direction of traffic)

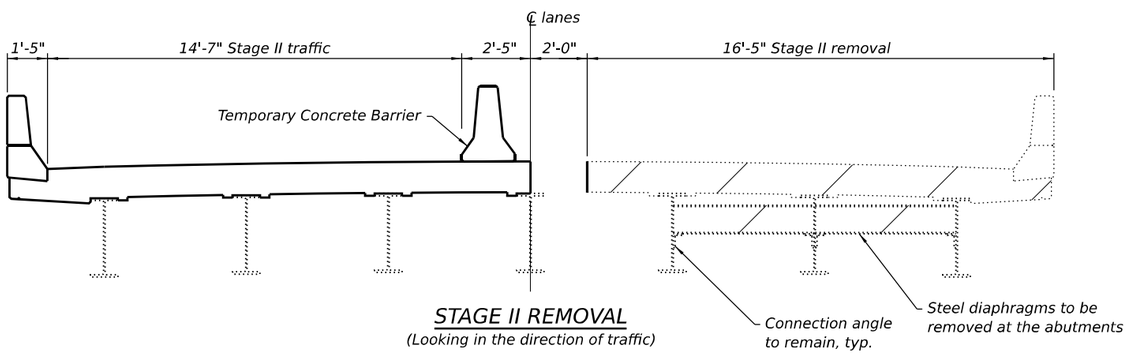

STAGE II REMOVAL
(Looking in the direction of traffic)

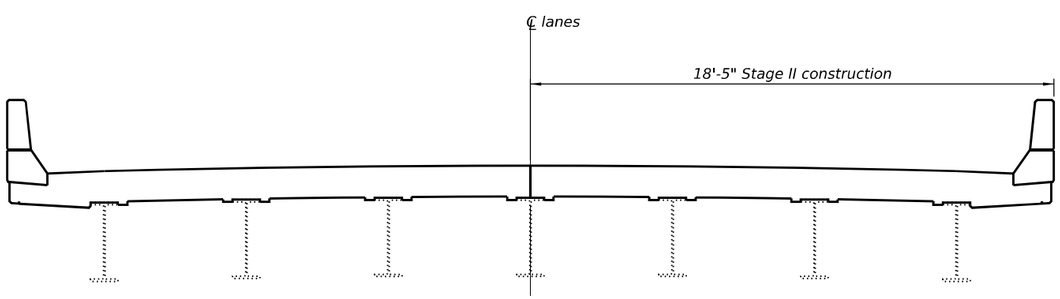

STAGE II CONSTRUCTION
(Looking in the direction of traffic)

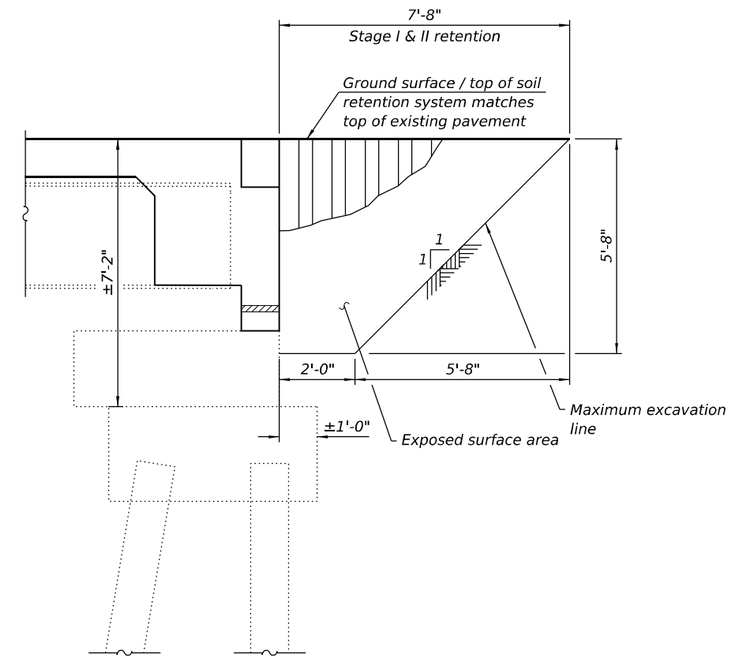

TEMPORARY SOIL RETENTION SYSTEM

Temporary Soil Retention System Notes:

A cantilevered sheet piling design does not appear feasible and additional members or other retention systems may be necessary. The Contractor shall submit a temporary soil retention system design including plan details and calculations for review and acceptance by the Engineer.

The soil behind the existing abutments and below the existing approach slabs is fill material used to raise the grade during initial construction of the bridges. No soil borings are available at this depth at these locations. Conservative assumptions for these soil properties should be made in the design of the retention system.

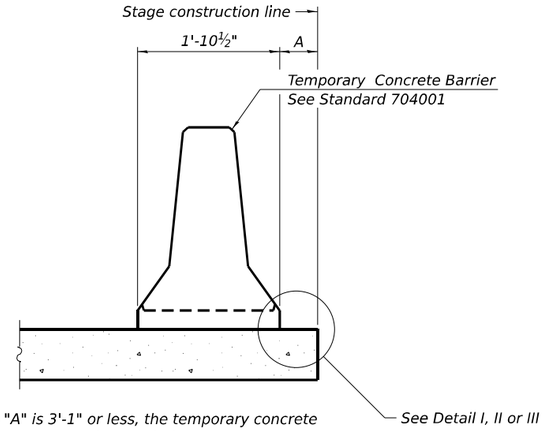

When "A" is 3'-1" or less, the temporary concrete barrier shall be restrained to the new slab according to Detail I, II or III. No restraint is required when "A" is greater than 3'-1".

NEW SLAB OR NEW DECK BEAM

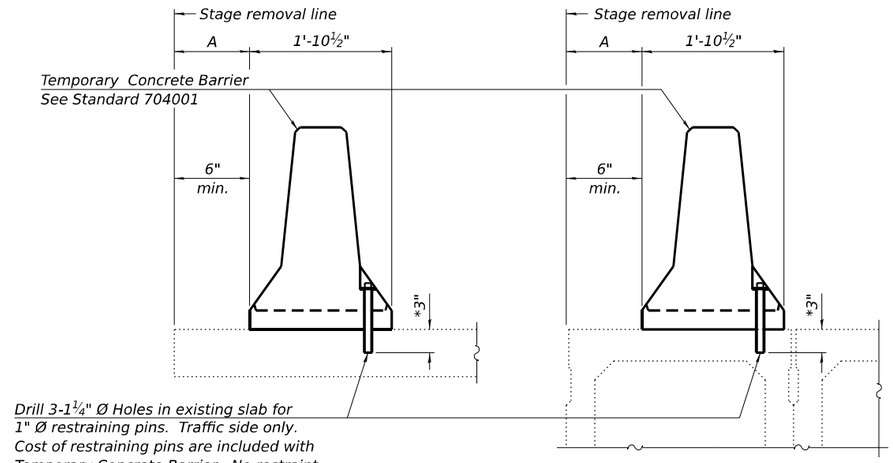

EXISTING SLAB

* When hot-mix asphalt wearing surface is present, embedment shall be 3" plus the wearing surface depth.

EXISTING DECK BEAM

SECTIONS THRU SLAB OR DECK BEAM

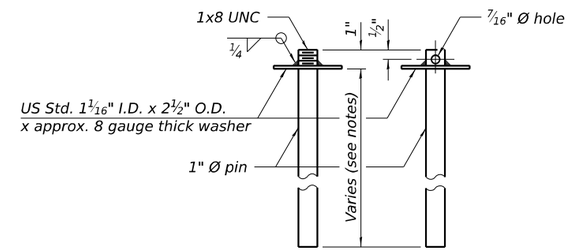

RESTRAINING PIN

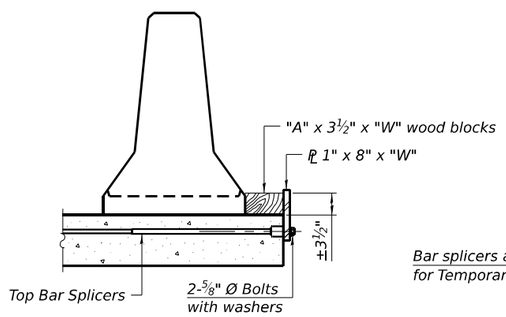

DETAIL I

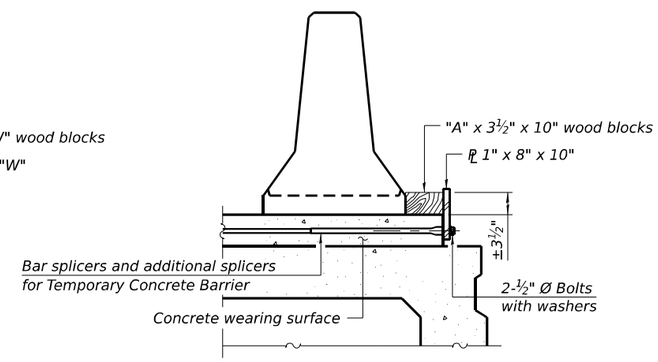

DETAIL II

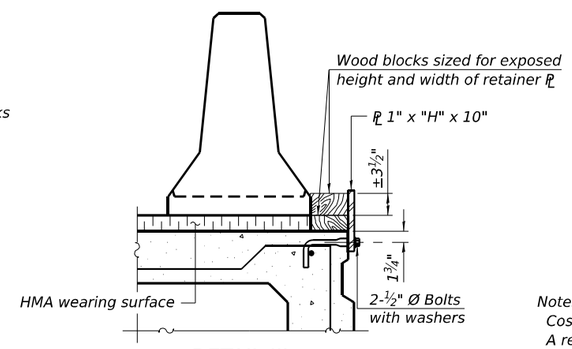

DETAIL III

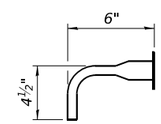

BAR SPLICER FOR #4 BAR - DETAIL III

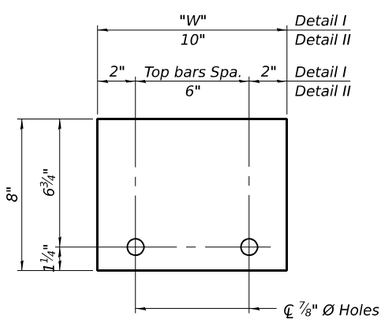

STEEL RETAINER PL 1" x 8" x "W"

(Detail I and II)

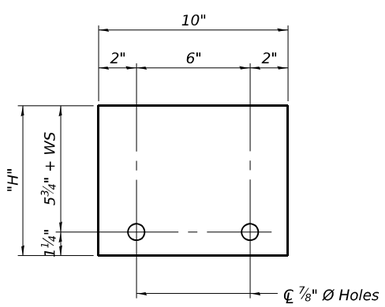

STEEL RETAINER PL 1" x "H" x 10"

(Detail III)

Notes:

Cost of retainer assembly is included with Temporary Concrete Barrier.

A retainer assembly shall be located at the approximate ℄ of each temporary concrete barrier.

The retainer plate shall not be removed until the concrete on the adjacent stage is ready to be poured. For Detail III applications the retainer plate shall not be removed until just prior to placing the adjacent beam.

When the 'A' dimension is less than 1½", the wood block shall be omitted and the barrier shall be placed in direct contact with the steel retainer plate. For deck beam applications the minimum required 'A' distance is 6" to accommodate the shear key clamping device.

Detail I - Installation for a new bridge deck or bridge slab.

Detail II - Installation for a new deck beam with an initial concrete wearing surface. Additional bar splicers shall be provided at 6'-0" centers and paired with the bar splicers of the concrete wearing surface reinforcement to accommodate the installation of the retainer assemblies. The cost of the additional bar splicers is included with the concrete wearing surface.

Detail III - Installation for a new deck beam with no initial wearing surface or with an initial hot-mix asphalt (HMA) wearing surface present. The deck beam directly beneath the temporary concrete barrier shall be fabricated with bar splicer inserts in the side of the beam, as detailed, to accommodate the installation of the retainer assemblies. A pair of bar splicers, 6" apart, shall be placed at 6'-0" centers along the length of the beam. The cost of the bar splicers is included with the deck beam.

RAILING CRITERIA

NCHRP 350 Test Level	3
Railing Weight (plf)	440

R-27

5-15-2023

MODEL: Sheet
FILE NAME: Y:\IDOT\1423-04_78A80\CADD\SP SN 077-0007_0008\0770007-78A80-04-TCB.dgn

ESCA CONSULTANTS, INC.

USER NAME = nhc	DESIGNED -	ELH	08/24	REVISED -	
ESCA PROJECT NO.= 1423.04	CHECKED -	ARD	10/24	REVISED -	
PLOT SCALE = 0:2 ':" / in.	DRAWN -	NHC	08/24	REVISED -	
PLOT DATE = 2/3/2025	CHECKED -	ELH	08/24	REVISED -	

STATE OF ILLINOIS
DEPARTMENT OF TRANSPORTATION

TEMPORARY CONCRETE BARRIER
SN 077-0007 (NB) & SN 077-0008 (SB)

SHEET 4 OF 39 SHEETS

F.A.I. RTE.	SECTION	COUNTY	TOTAL SHEETS	SHEET NO.
57	D9 BRIDGE REPAIR 25-4	PULASKI	103	67
		CONTRACT NO. 78A80		
		ILLINOIS	FED. AID PROJECT	

2/3/2025 11:21:58 AM

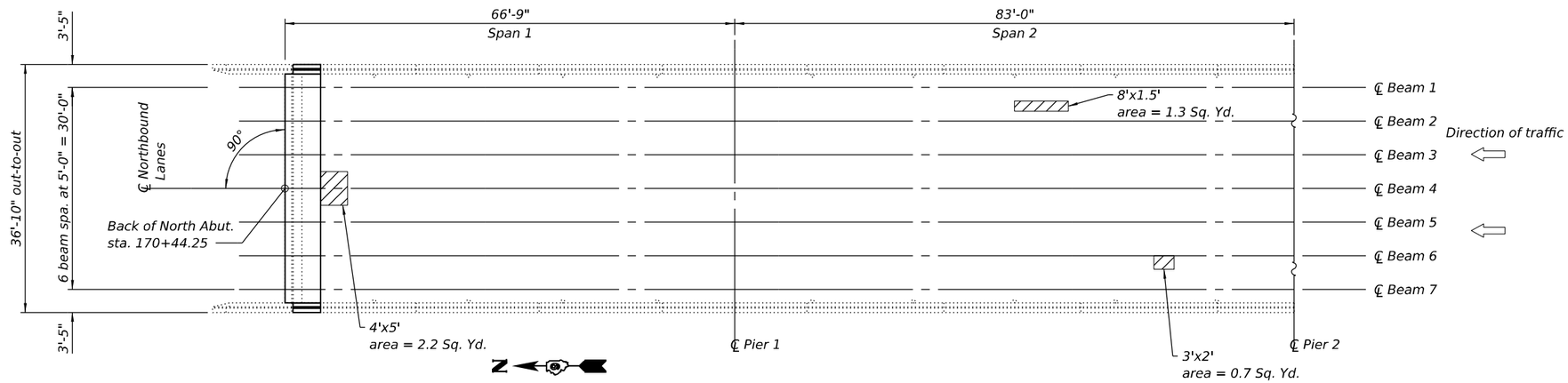

DECK PLAN
(Spans 1 and 2)

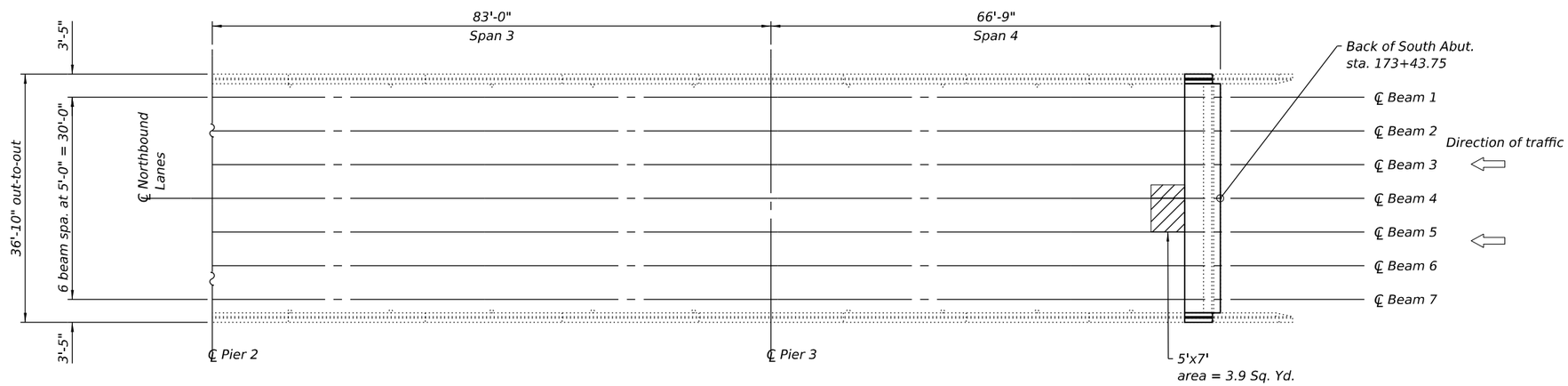

DECK PLAN
(Spans 3 and 4)

LEGEND

Deck Slab Repair
(Full Depth, Type II)

Notes:
The Resident Engineer will determine final patch locations and quantities in the field after removal of the concrete wearing surface, before bridge deck patching operations begin.
The Engineer shall show actual locations and size of deck repairs on As-Built Plans.

SN 077-0007 BILL OF MATERIAL

Item	Unit	Total
Deck Slab Repair (Full Depth, Type II)	Sq. Yd.	9

(Sheet 1 of 2)

MODEL: Sheet
FILE NAME: Y:\IDOT\1423-04_78A80\CADD\SP SN 077-0007_0008\0770007-78A80-05-DeckPatching(NB).dgn

ESCA CONSULTANTS, INC.

USER NAME = nhc	DESIGNED - ELH 08/24	REVISED -	STATE OF ILLINOIS DEPARTMENT OF TRANSPORTATION	BRIDGE DECK PATCHING SN 077-0007 (NB)	
ESCA PROJECT NO.= 1423.04	CHECKED - ARD 10/24	REVISED -			
PLOT SCALE = 0:2 ':" / in.	DRAWN - NHC 10/24	REVISED -			
PLOT DATE = 2/3/2025	CHECKED - ELH 10/24	REVISED -		SHEET 5 OF 39 SHEETS	

F.A.I. RTE.	SECTION	COUNTY	TOTAL SHEETS	SHEET NO.
57	D9 BRIDGE REPAIR 25-4	PULASKI	103	68
		CONTRACT NO. 78A80		
	ILLINOIS	FED. AID PROJECT		

2/3/2025 11:21:59 AM

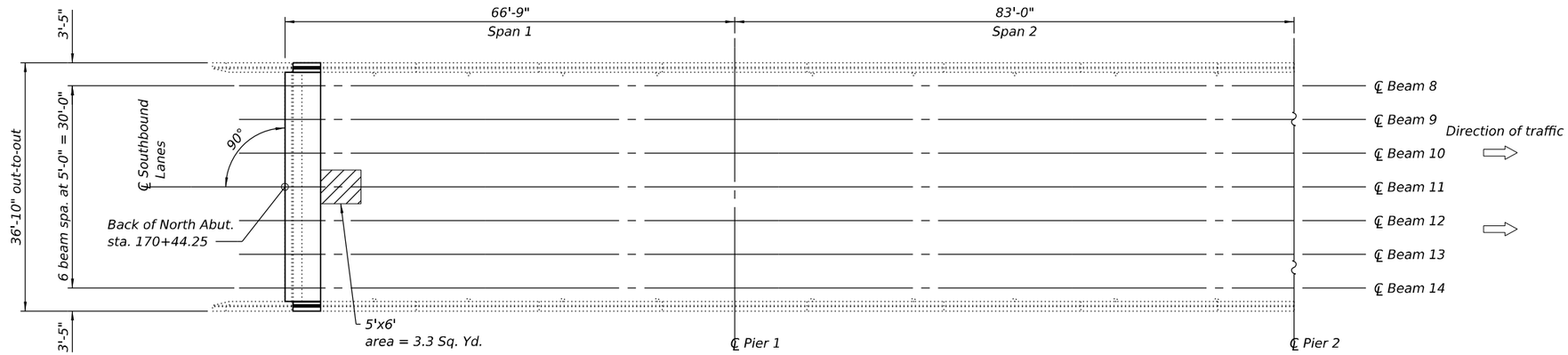

DECK PLAN
(Spans 1 and 2)

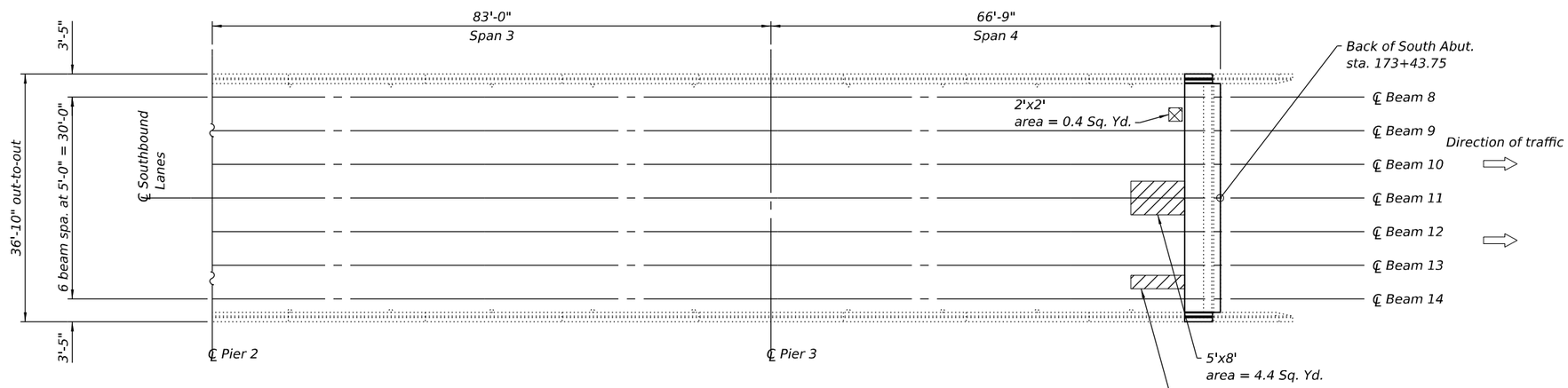

DECK PLAN
(Spans 3 and 4)

LEGEND

- Deck Slab Repair (Full Depth, Type I)
- Deck Slab Repair (Full Depth, Type II)

Notes:
The Resident Engineer will determine final patch locations and quantities in the field after removal of the concrete wearing surface, before bridge deck patching operations begin.
The Engineer shall show actual locations and size of deck repairs on As-Built Plans.

SN 077-0008 BILL OF MATERIAL

Item	Unit	Total
Deck Slab Repair (Full Depth, Type I)	Sq. Yd.	1
Deck Slab Repair (Full Depth, Type II)	Sq. Yd.	10

(Sheet 2 of 2)

MODEL: Sheet
FILE NAME: Y:\IDOT\1423-04_78A80\CADD\SP SN 077-0007_0008\0770007-78A80-06-DeckPatching(SB).dgn

ESCA CONSULTANTS, INC.

USER NAME = nhc	DESIGNED - ELH 08/24	REVISED -	STATE OF ILLINOIS DEPARTMENT OF TRANSPORTATION	BRIDGE DECK PATCHING SN 077-0008 (SB)	
ESCA PROJECT NO.= 1423.04	CHECKED - ARD 10/24	REVISED -			
PLOT SCALE = 0:2 ':" / in.	DRAWN - NHC 10/24	REVISED -			
PLOT DATE = 2/3/2025	CHECKED - ELH 10/24	REVISED -		SHEET 6 OF 39 SHEETS	

F.A.I. RTE.	SECTION	COUNTY	TOTAL SHEETS	SHEET NO.
57	D9 BRIDGE REPAIR 25-4	PULASKI	103	69
		CONTRACT NO. 78A80		
	ILLINOIS	FED. AID PROJECT		

2/3/2025 11:22:00 AM

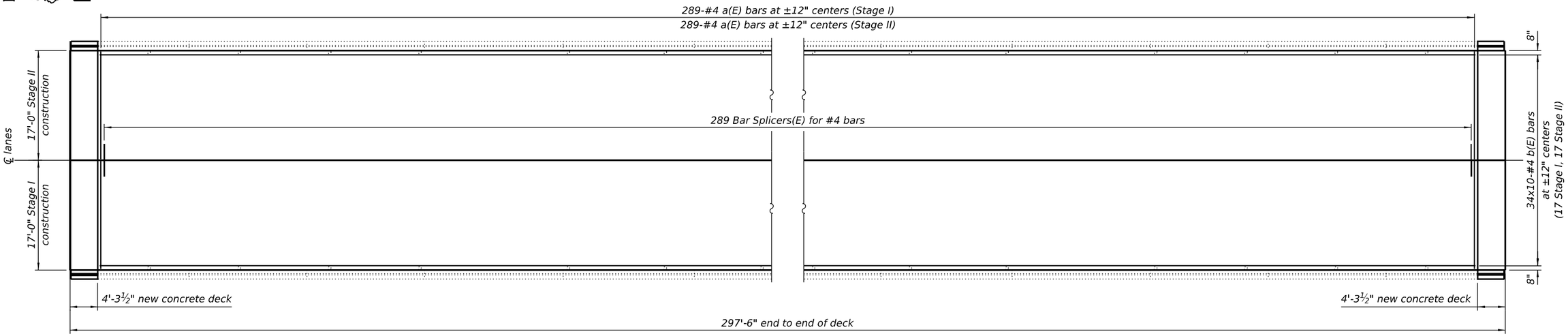

MINIMUM BAR LAP

#4 bar =2'-5"

WEARING SURFACE REINFORCEMENT PLAN AT SN 077-0007

(SN 077-0008 similar)

Notes:
Bars indicated thus 34x10-#4 etc. indicates 34 lines of bars with 10 lengths per line.
Adjust location of reinforcement to clear floor drains.
Original deck surface had a 2¼" parabolic crown.

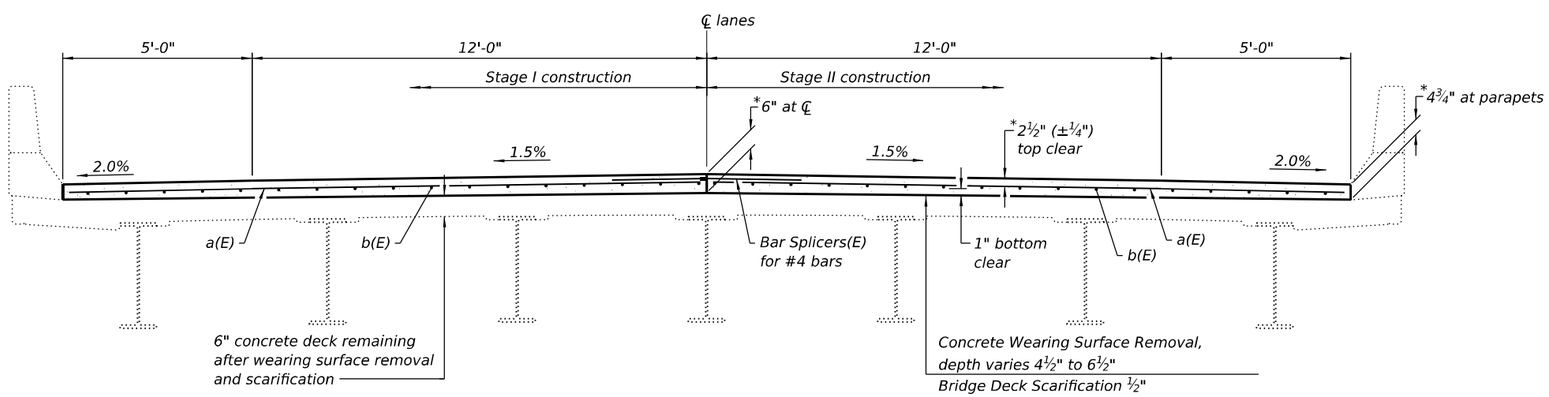

CROSS SECTION

(Looking North)

* Prior to grinding

SN 077-0007 BILL OF MATERIAL

Bar	No.	Size	Length	Shape
a(E)	578	#4	16'-8"	———
b(E)	340	#4	26'-9"	———
Reinforcement Bars, Epoxy Coated			Pound	12,520
Concrete Wearing Surface (Variable Depth)			Sq. Yd.	1,092

SN 077-0008 BILL OF MATERIAL

Bar	No.	Size	Length	Shape
a(E)	578	#4	16'-8"	———
b(E)	340	#4	26'-9"	———
Reinforcement Bars, Epoxy Coated			Pound	12,520
Concrete Wearing Surface (Variable Depth)			Sq. Yd.	1,092

MODEL: Sheet
FILE NAME: Y:\IDOT\1423-04_78A80\CADD\SP SN 077-0007_0008\0770007-78A80-07-ConcreteOverlay.dgn

ESCA CONSULTANTS, INC.
CIVIL & STRUCTURAL ENGINEERS

USER NAME = nhc	DESIGNED - ELH 08/24	REVISED -	STATE OF ILLINOIS DEPARTMENT OF TRANSPORTATION	CONCRETE OVERLAY SN 077-0007 (NB) & SN 077-0008 (SB)	
ESCA PROJECT NO.= 1423.04	CHECKED - ARD 10/24	REVISED -			
PLOT SCALE = 0:2 ':" / in.	DRAWN - KAH 10/24	REVISED -			
PLOT DATE = 3/12/2025	CHECKED - ELH 10/24	REVISED -		SHEET 7 OF 39 SHEETS	

F.A.I. RTE.	SECTION	COUNTY	TOTAL SHEETS	SHEET NO.
57	D9 BRIDGE REPAIR 25-4	PULASKI	103	70
		CONTRACT NO. 78A80		
	ILLINOIS	FED. AID PROJECT		

3/12/2025 9:26:41 AM

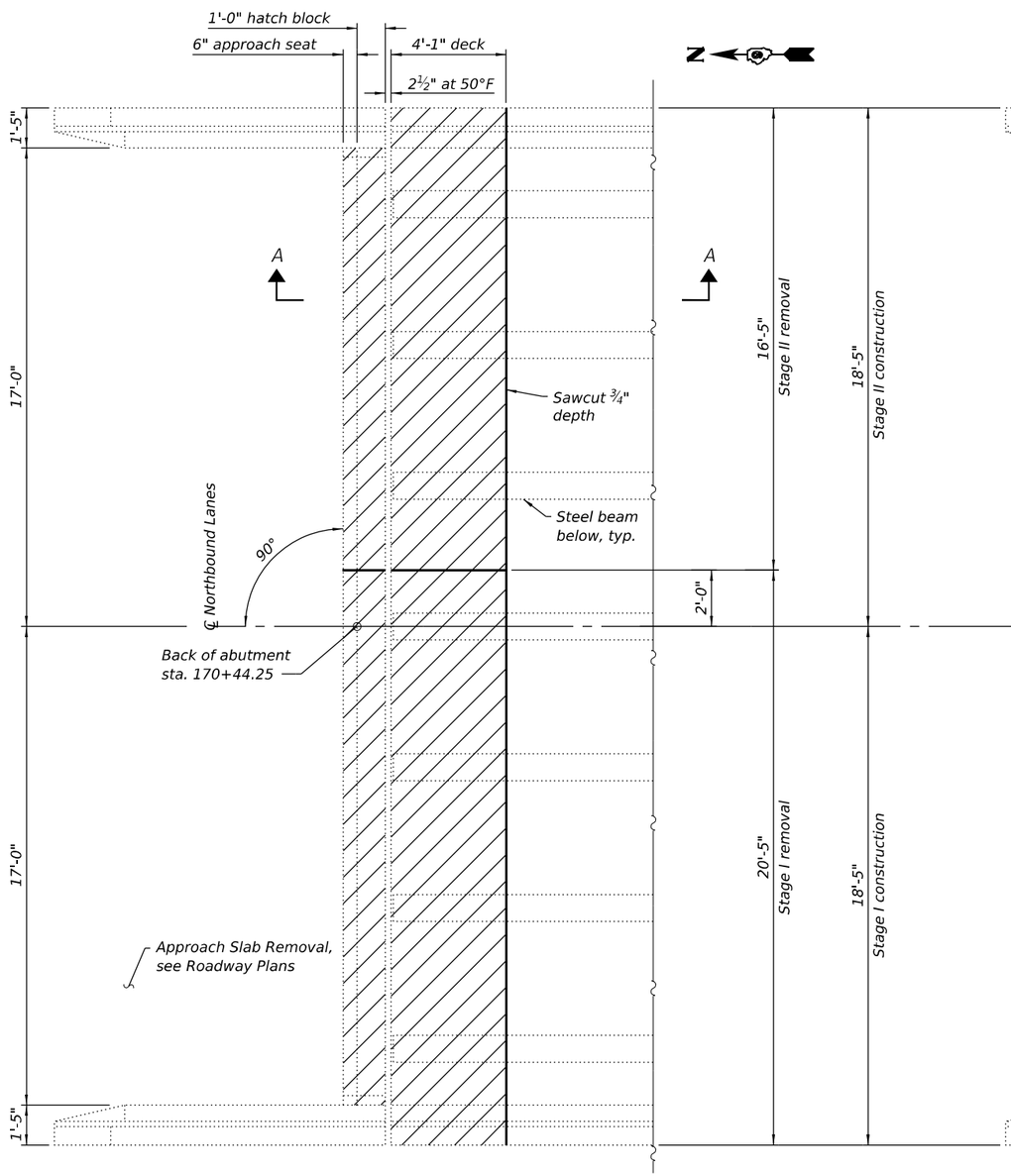

EXISTING PARTIAL PLAN

SN 077-0007 North Abutment shown, other abutments similar

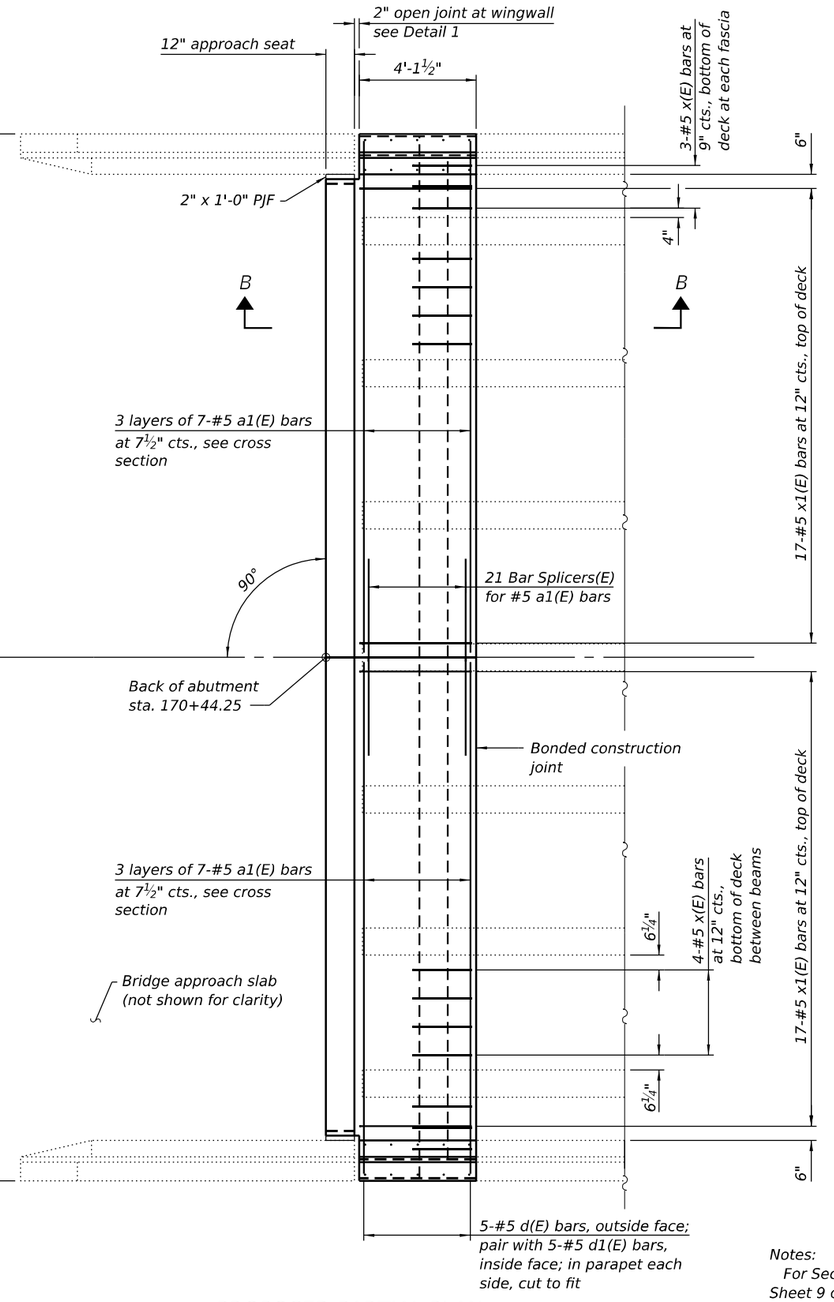

PROPOSED PARTIAL PLAN

SN 077-0007 North Abutment shown, other abutments similar

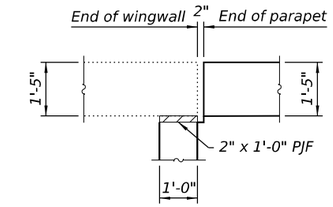

DETAIL 1

LEGEND

Concrete Removal

Notes:
For Section A-A and Section B-B, see Sheet 9 of 39.

(Sheet 1 of 3)

ESCA CONSULTANTS, INC. CIVIL & STRUCTURAL ENGINEERS	USER NAME = nhc	DESIGNED - ELH 08/24	REVISED -	STATE OF ILLINOIS DEPARTMENT OF TRANSPORTATION	SUPERSTRUCTURE SN 077-0007 (NB) & SN 077-0008 (SB)
	ESCA PROJECT NO.= 1423.04	CHECKED - ARD 10/24	REVISED -		
	PLOT SCALE = 0:2 ':" / in.	DRAWN - NHC 09/24	REVISED -		
	PLOT DATE = 2/3/2025	CHECKED - ELH 09/24	REVISED -		SHEET 8 OF 39 SHEETS

F.A.I. RTE.	SECTION	COUNTY	TOTAL SHEETS	SHEET NO.
57	D9 BRIDGE REPAIR 25-4	PULASKI	103	71
		CONTRACT NO. 78A80		
		ILLINOIS	FED. AID PROJECT	

MODEL: Sheet
FILE NAME: Y:\IDOT\1423-04_78A80\CADD\SP SN 077-0007_0008\0770007-78A80-08-Superstructure.dgn
2/3/2025 11:22:01 AM

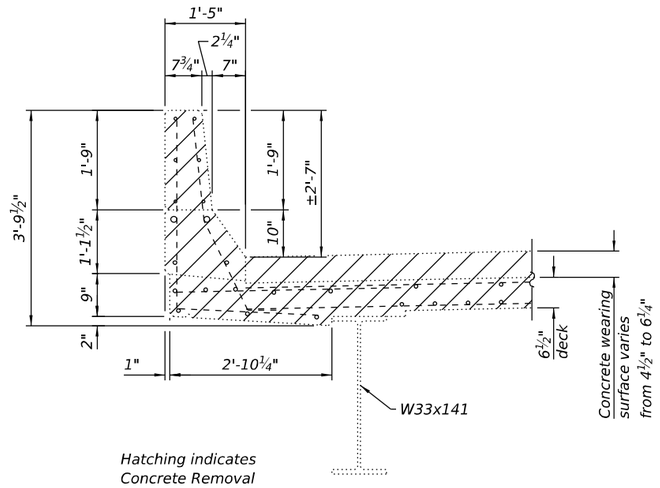

SECTION THRU EXISTING PARAPET

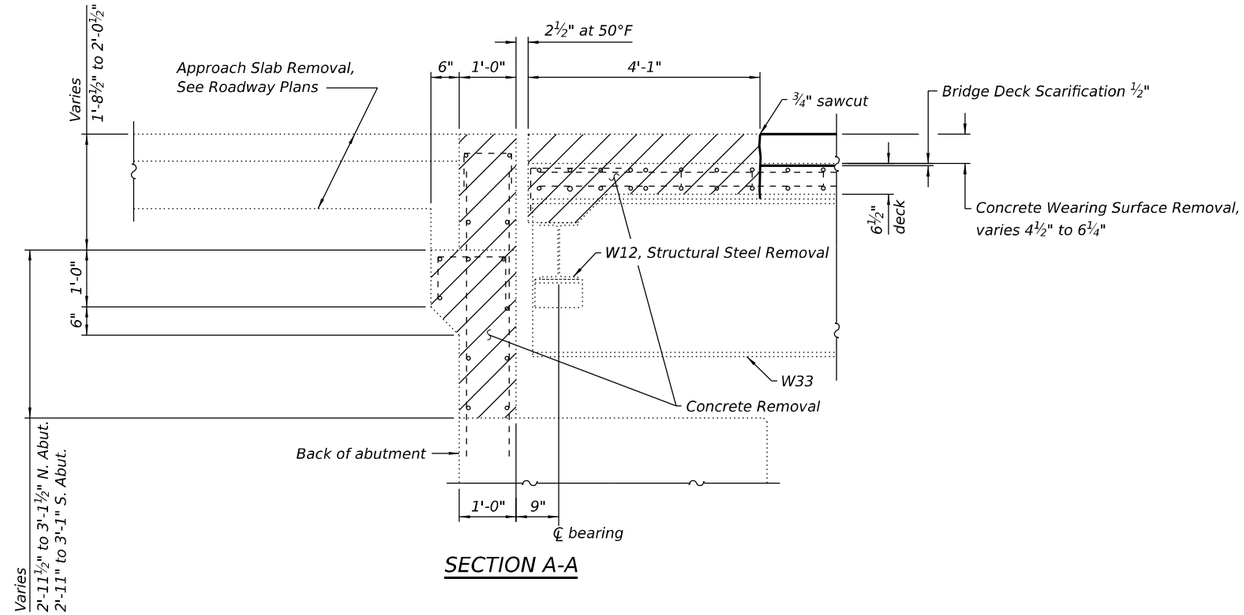

SECTION A-A

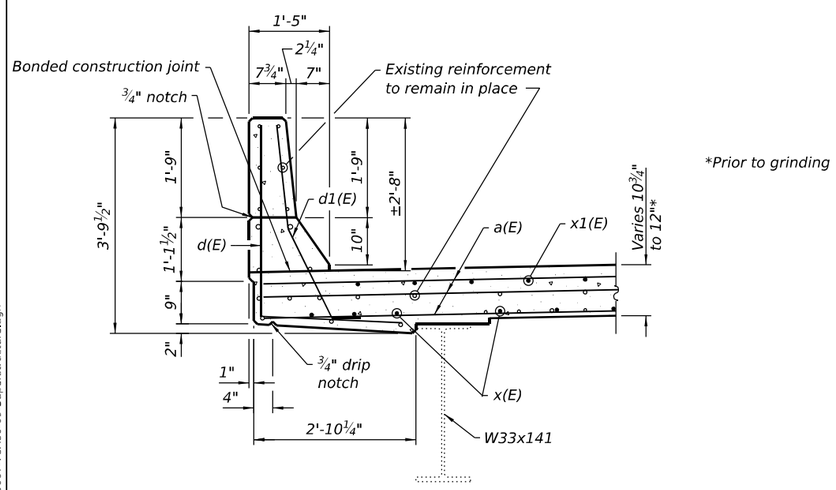

*Prior to grinding

SECTION THRU PROPOSED PARAPET

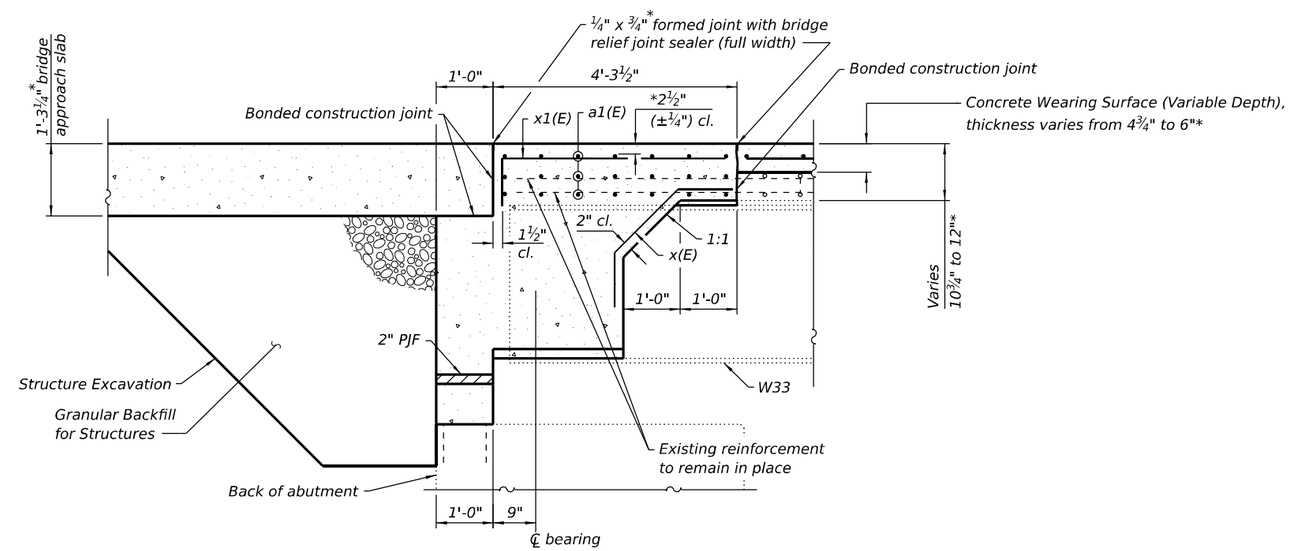

SECTION B-B

(See Sheet 11 of 39 for diaghragm reinforcement)

(Sheet 2 of 3)

MODEL: Sheet
FILE NAME: Y:\IDOT\1423-04_78A80\CADD\SP SN 077-0007_0008\0770007-78A80-09-Superstructure.dgn

ESCA CONSULTANTS, INC. CIVIL & STRUCTURAL ENGINEERS

USER NAME = nhc	DESIGNED -	ELH	08/24	REVISED -	
ESCA PROJECT NO.= 1423.04	CHECKED -	ARD	10/24	REVISED -	
PLOT SCALE = 0:2 ':" / in.	DRAWN -	NHC	10/24	REVISED -	
PLOT DATE = 2/3/2025	CHECKED -	ELH	10/24	REVISED -	

STATE OF ILLINOIS
DEPARTMENT OF TRANSPORTATION

SUPERSTRUCTURE
SN 077-0007 (NB) & SN 077-0008 (SB)

SHEET 9 OF 39 SHEETS

F.A.I. RTE.	SECTION	COUNTY	TOTAL SHEETS	SHEET NO.
57	D9 BRIDGE REPAIR 25-4	PULASKI	103	72
		CONTRACT NO. 78A80		
		ILLINOIS FED. AID PROJECT		

2/3/2025 11:22:02 AM

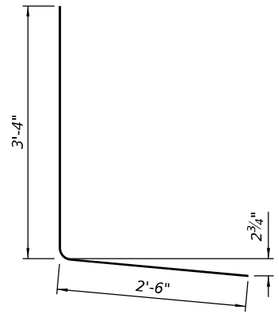

BAR d(E)

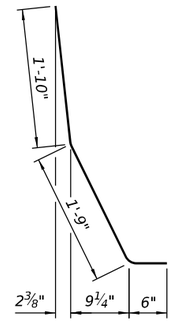

BAR d1(E)

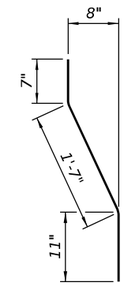

BAR d2(E)

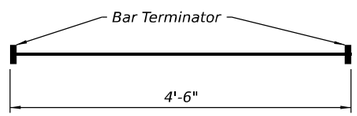

BAR m11(E)

(Headed. 2-#6 Bar Terminators)

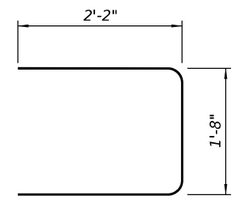

BAR m15(E)

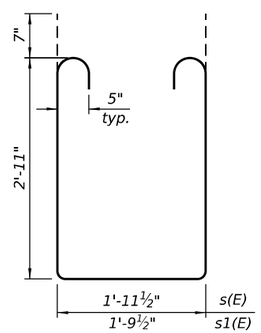

BARS s(E) & s1(E)

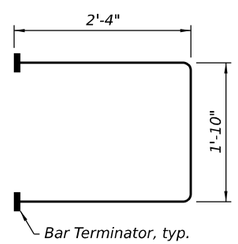

BAR s2(E)

(Headed. 2-#5 Bar Terminators)

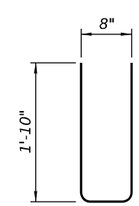

BAR u10(E)

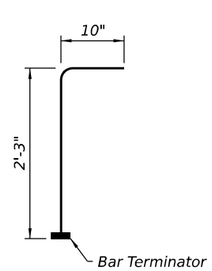

BAR v100(E)

(Headed. 1-#5 Bar Terminator)

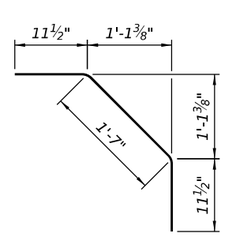

BAR x(E)

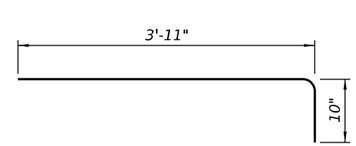

BAR x1(E)

SN 077-0007
TWO ENDS SUPERSTRUCTURE
BILL OF MATERIAL

Bar	No.	Size	Length	Shape
a1(E)	84	#5	18'-0"	
d(E)	20	#5	5'-10"	
d1(E)	20	#5	4'-1"	
d2(E)	12	#5	3'-1"	
m10(E)	20	#6	16'-2"	
m11(E)	24	#6	4'-6"	
m12(E)	36	#6	4'-7"	
m13(E)	42	#5	4'-0"	
m14(E)	8	#4	16'-4"	
m15(E)	16	#6	6'-0"	
s(E)	68	#5	9'-0"	
s1(E)	4	#5	8'-10"	
s2(E)	80	#5	6'-6"	
u10(E)	80	#4	4'-4"	
v100(E)	68	#5	3'-1"	
x(E)	60	#5	3'-6"	
x1(E)	68	#5	4'-9"	
Concrete Superstructure			Cu. Yd.	37.2
Reinforcement Bars, Epoxy Coated			Pound	5350
Bar Terminators			Each	276

SN 077-0008
TWO ENDS SUPERSTRUCTURE
BILL OF MATERIAL

Bar	No.	Size	Length	Shape
a1(E)	84	#5	18'-0"	
d(E)	20	#5	5'-10"	
d1(E)	20	#5	4'-1"	
d2(E)	12	#5	3'-1"	
m10(E)	20	#6	16'-2"	
m11(E)	24	#6	4'-6"	
m12(E)	36	#6	4'-7"	
m13(E)	42	#5	4'-0"	
m14(E)	8	#4	16'-4"	
m15(E)	16	#6	6'-0"	
s(E)	68	#5	9'-0"	
s1(E)	4	#5	8'-10"	
s2(E)	80	#5	6'-6"	
u10(E)	80	#4	4'-4"	
v100(E)	68	#5	3'-1"	
x(E)	60	#5	3'-6"	
x1(E)	68	#5	4'-9"	
Concrete Superstructure			Cu. Yd.	37.2
Reinforcement Bars, Epoxy Coated			Pound	5350
Bar Terminators			Each	276

(Sheet 3 of 3)

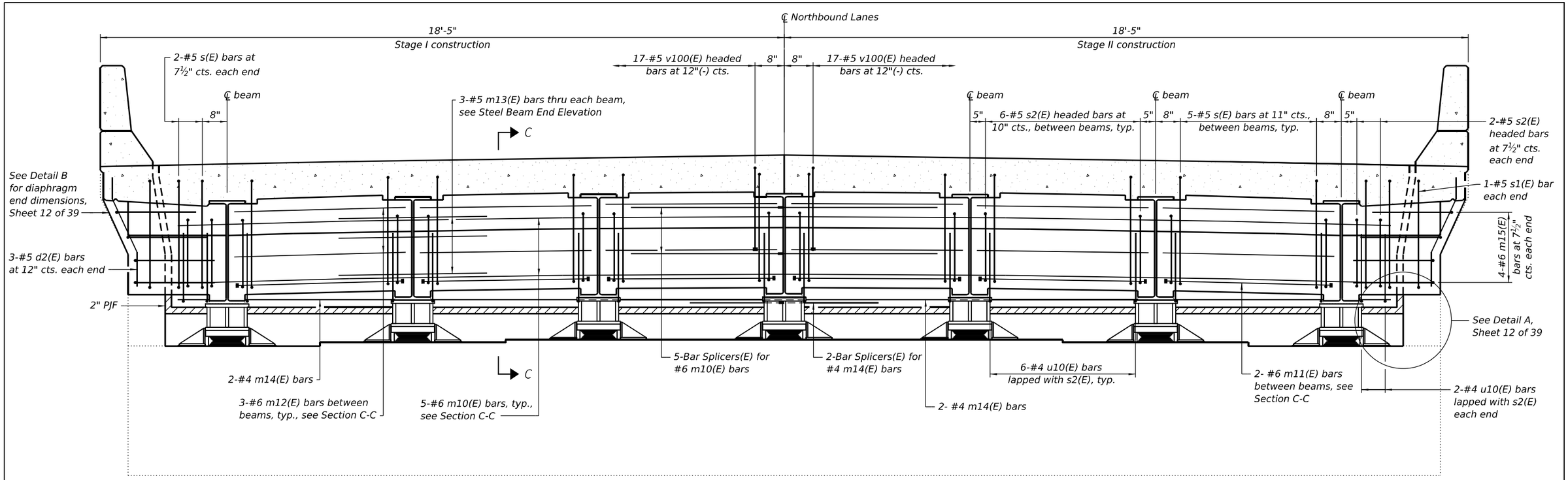

CONCRETE DIAPHRAGM ELEVATION AT ABUTMENT

SN 077-0007 North Abutment shown, SN 077-0007 South Abutment similar
SN 077-0008 South Abutment shown, SN 077-0008 North Abutment similar

Notes:
Space reinforcement in diaphragm to miss approach slab dowel rods.
See Sheet 8-10 of 39 for superstructure details and Bill of Material.
The approach slab seat shall have a constant slope determined from the control points shown.
Cost of preformed joint filler, fabric reinforced elastomeric mat, galvanized plate, galvanized angles, stainless steel expansion bolts with nuts and washers and installation are included in the cost of Concrete Superstructure.

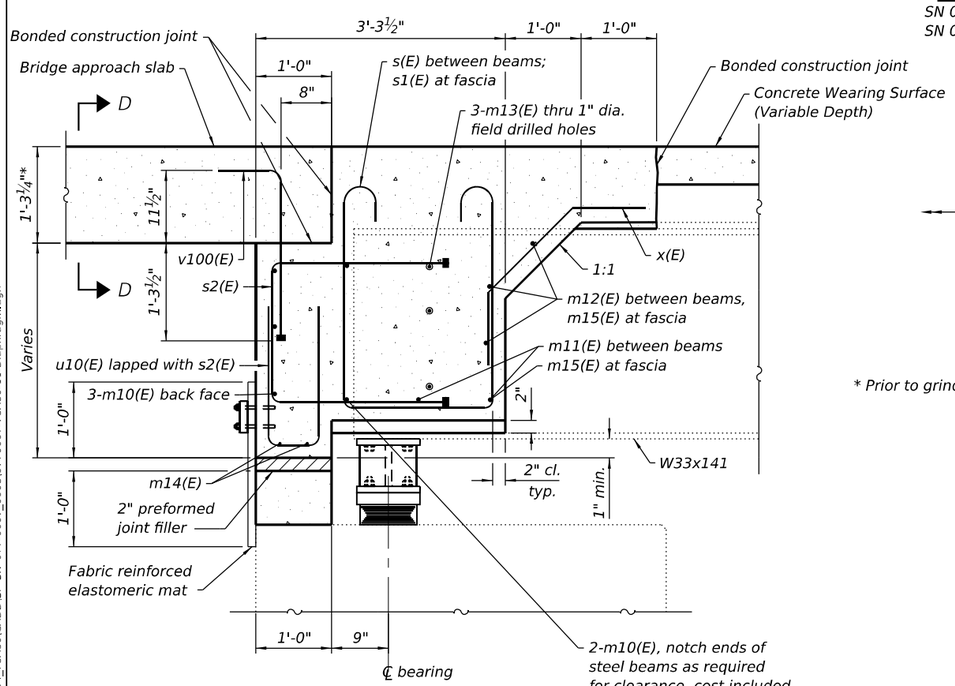

SECTION C-C

* Prior to grinding

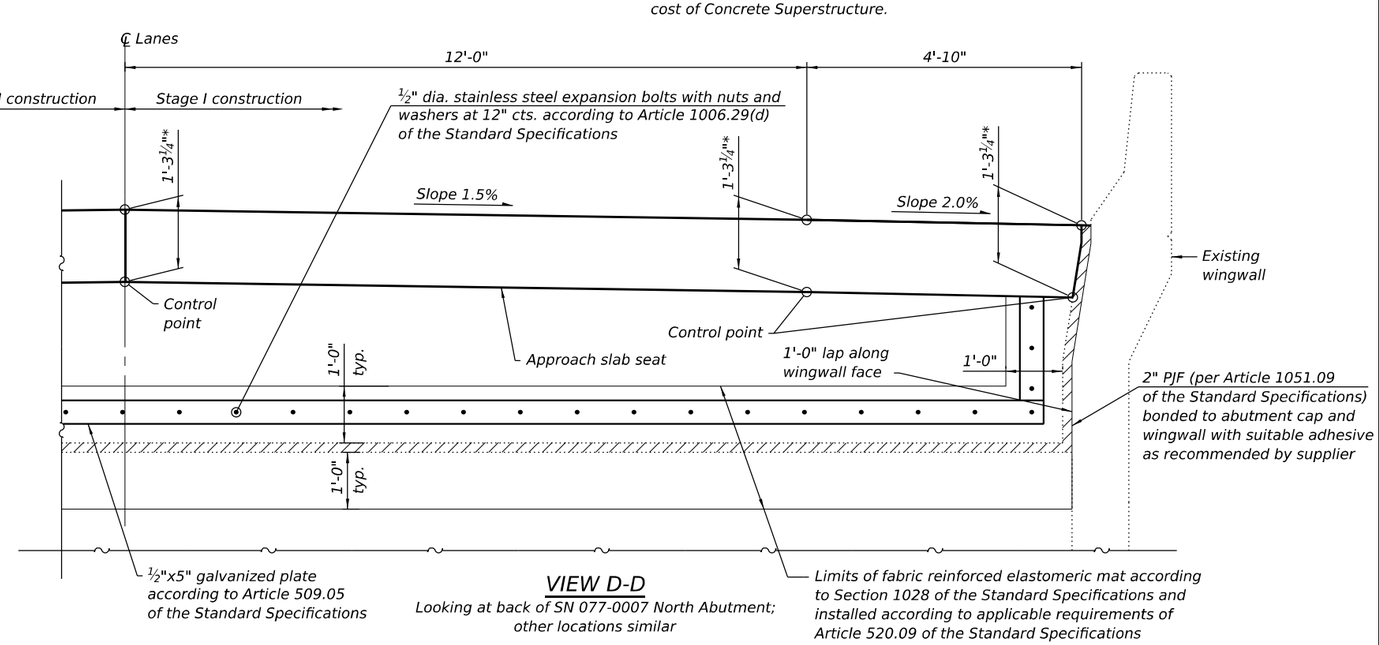

VIEW D-D

Looking at back of SN 077-0007 North Abutment; other locations similar

MODEL: Sheet
FILE NAME: Y:\IDOT\1423-04_78A80\CADD\SP SN 077-0007_0008\0770007-78A80-11-Diaphragm.dgn
3/12/2025 9:42:29 AM

ESCA CONSULTANTS, INC. CIVIL & STRUCTURAL ENGINEERS

USER NAME = nhc	DESIGNED -	ELH	08/24	REVISED -	
ESCA PROJECT NO.= 1423.04	CHECKED -	ARD	10/24	REVISED -	
PLOT SCALE = 0:2 ':" / in.	DRAWN -	NHC	03/25	REVISED -	
PLOT DATE = 3/12/2025	CHECKED -	ELH	03/25	REVISED -	

STATE OF ILLINOIS
DEPARTMENT OF TRANSPORTATION

DIAPHRAGMS
SN 077-0007 (NB) & SN 077-0008 (SB)
SHEET 11 OF 39 SHEETS

F.A.I. RTE.	SECTION	COUNTY	TOTAL SHEETS	SHEET NO.
57	D9 BRIDGE REPAIR 25-4	PULASKI	103	74
		CONTRACT NO. 78A80		
	ILLINOIS	FED. AID PROJECT		

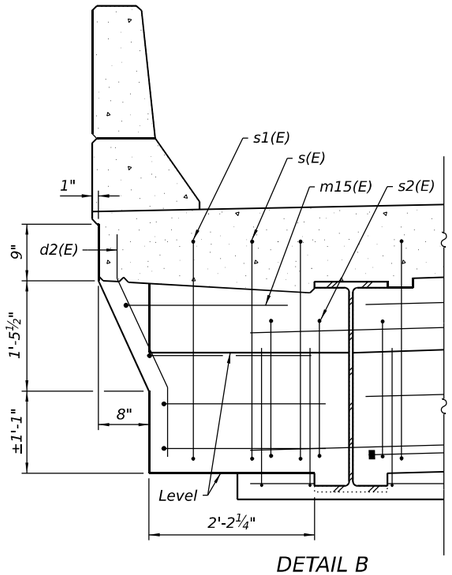

DETAIL B

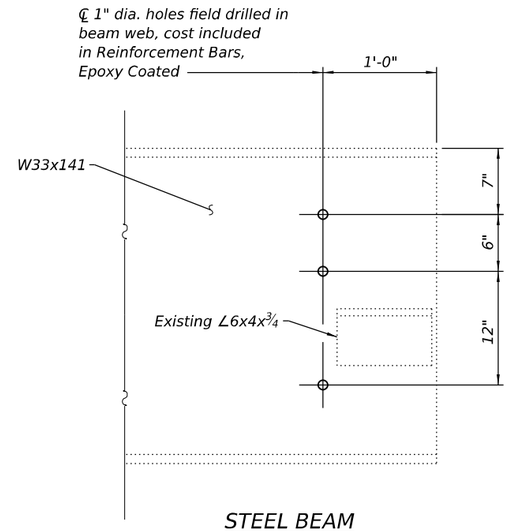

STEEL BEAM
END ELEVATION

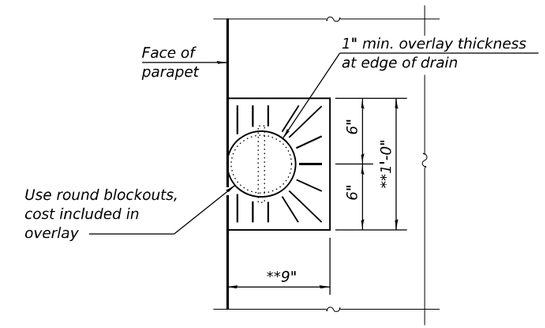

OVERLAY TREATMENT AT
FLOOR DRAINS

**Slope to drain

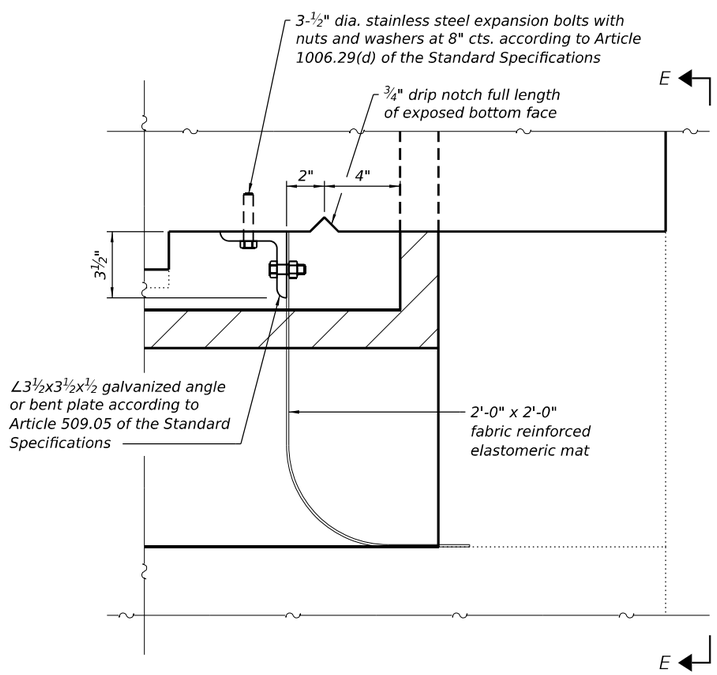

DETAIL A

Note:
Cost of fabric reinforced elastomeric mats, galvanized angles, stainless steel expansion bolts, and galvanized bolts are included in the cost of Concrete Superstructure.

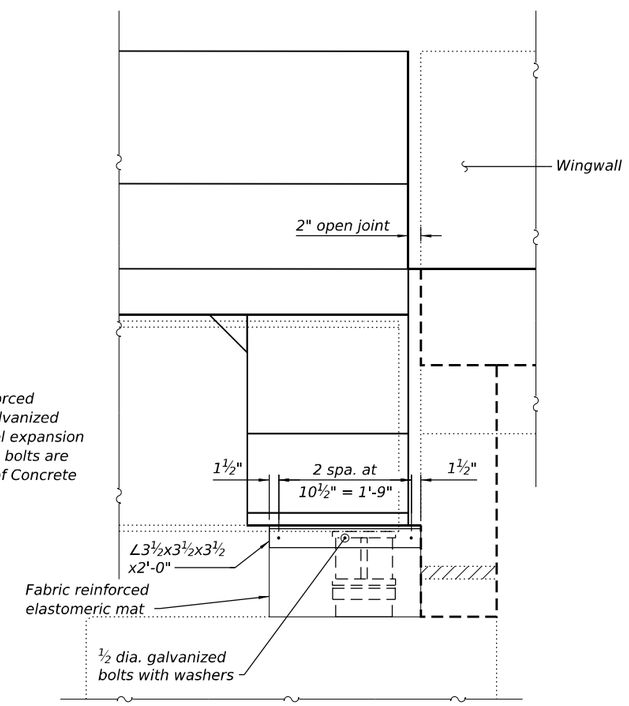

VIEW E-E

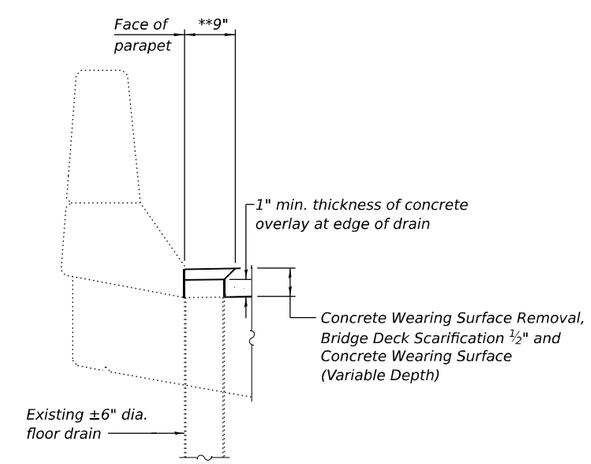

SECTION AT FLOOR DRAINS

MODEL: Sheet
FILE NAME: Y:\IDOT\1423-04_78A80\CADD\SP SN 077-0007_0008\0770007-78A80-12-SuperDtls.dgn
2/3/2025 11:22:04 AM

ESCA CONSULTANTS, INC. CIVIL & STRUCTURAL ENGINEERS

USER NAME = nhc	DESIGNED - ELH 08/24	REVISED -	STATE OF ILLINOIS DEPARTMENT OF TRANSPORTATION	SUPERSTRUCTURE DETAILS SN 077-0007 (NB) & SN 077-0008 (SB)	
ESCA PROJECT NO.= 1423.04	CHECKED - ARD 10/24	REVISED -			
PLOT SCALE = 0:2 ':" / in.	DRAWN - NHC 10/24	REVISED -			
PLOT DATE = 2/3/2025	CHECKED - ELH 10/24	REVISED -		SHEET 12 OF 39 SHEETS	

F.A.I. RTE.	SECTION	COUNTY	TOTAL SHEETS	SHEET NO.
57	D9 BRIDGE REPAIR 25-4	PULASKI	103	75
		CONTRACT NO. 78A80		
	ILLINOIS	FED. AID PROJECT		

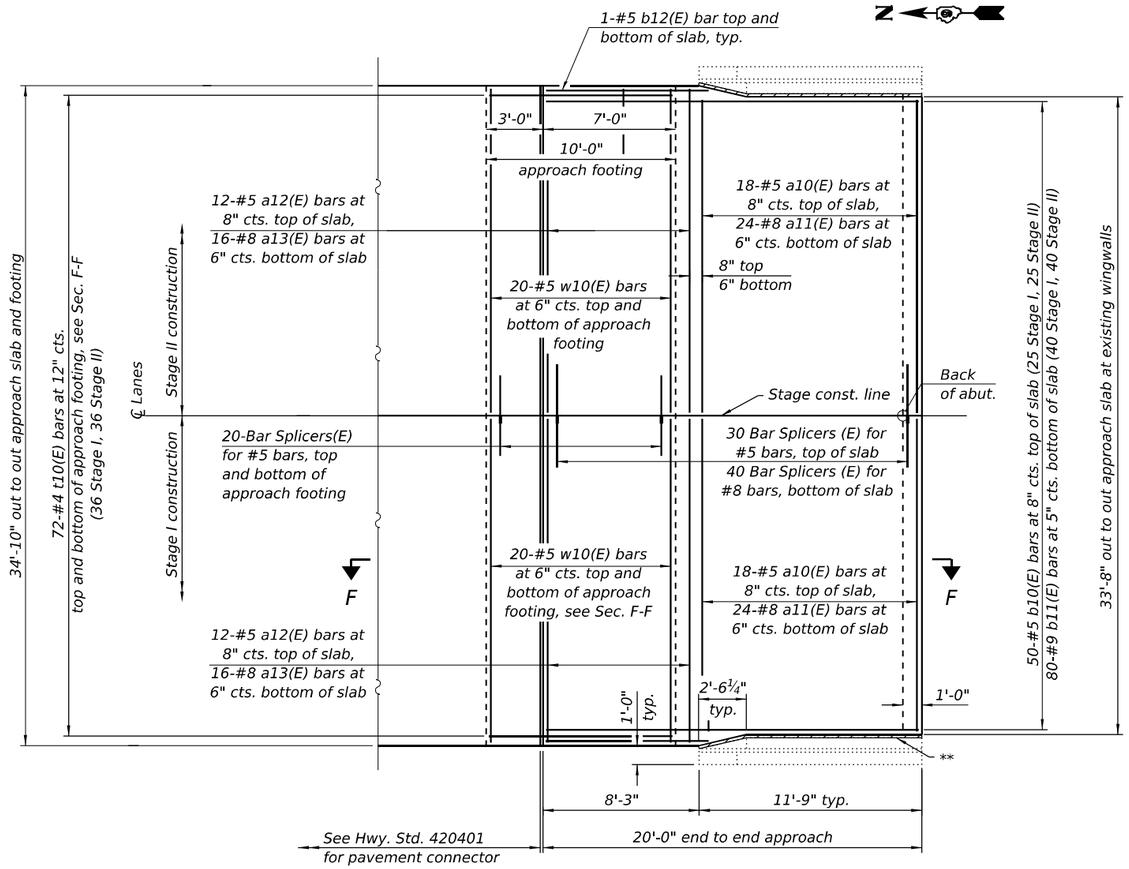

PLAN

(SN 077-0007 North Approach Slab shown; SN 077-0008 South Approach Slab similar by 180° rotation)

* Prior to grinding

** 2" preformed expansion joint filler according to Article 1051.09 of the Standard Specifications; full depth of slab, full length of parapet, typ. each parapet.

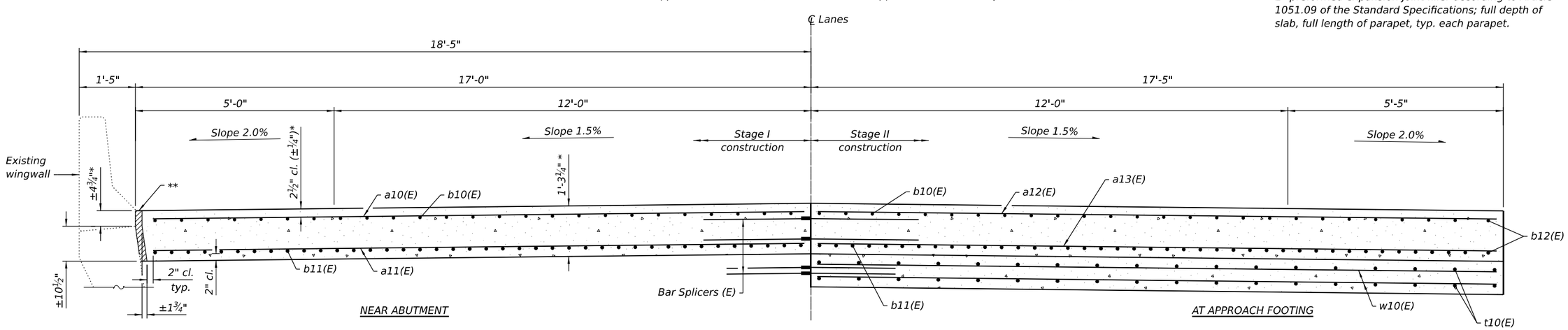

CROSS SECTION

(Looking North)

(Sheet 1 of 3)

ESCA CONSULTANTS, INC. ENGINEERS & ARCHITECTS & SURVEYORS	USER NAME = nhc	DESIGNED - ELH 08/24	REVISED -	STATE OF ILLINOIS DEPARTMENT OF TRANSPORTATION	BRIDGE APPROACH SLAB DETAILS SN 077-0007 (NB) & SN 077-0008 (SB)	F.A.I. RTE.	SECTION	COUNTY	TOTAL SHEETS	SHEET NO.
	ESCA PROJECT NO.= 1423.04	CHECKED - ARD 10/24	REVISED -			57	D9 BRIDGE REPAIR 25-4	PULASKI	103	76
	PLOT SCALE = 0:2 ':" / in.	DRAWN - NHC 01/25	REVISED -					CONTRACT NO. 78A80		
	PLOT DATE = 2/3/2025	CHECKED - ELH 01/25	REVISED -		SHEET 13 OF 39 SHEETS		ILLINOIS	FED. AID PROJECT		

MODEL: Sheet
FILE NAME: Y:\IDOT\1423-04_78A80\CADD\SP SN 077-0007_0008\0770007-78A80-13-ApproachSlabDtls.dgn
2/3/2025 11:22:05 AM

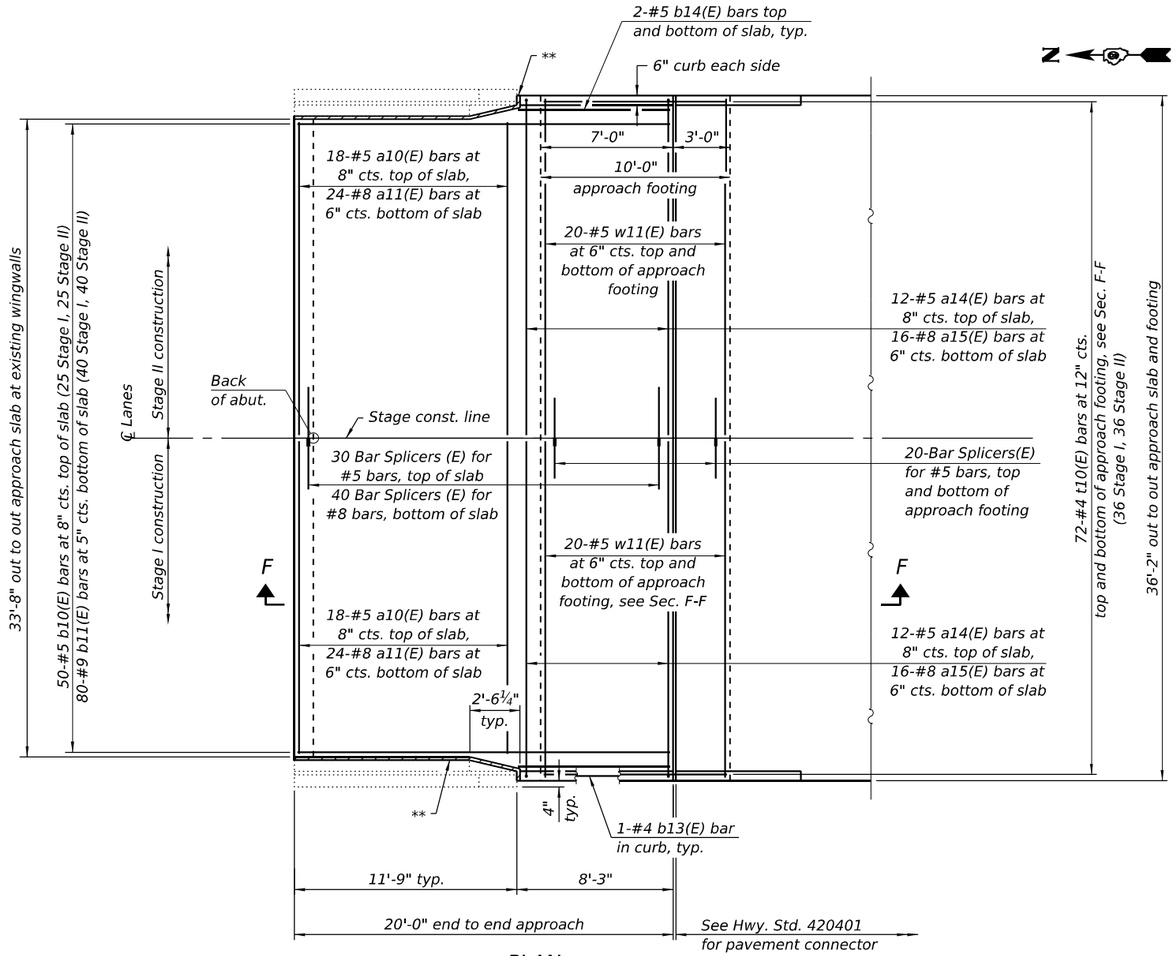

PLAN

(SN 077-0007 South Approach Slab shown; SN 077-0008 North Approach Slab similar by 180° rotation)

* Prior to grinding

** 2" preformed expansion joint filler according to Article 1051.09 of the Standard Specifications; full depth of slab, full length of parapet, typ. each parapet.

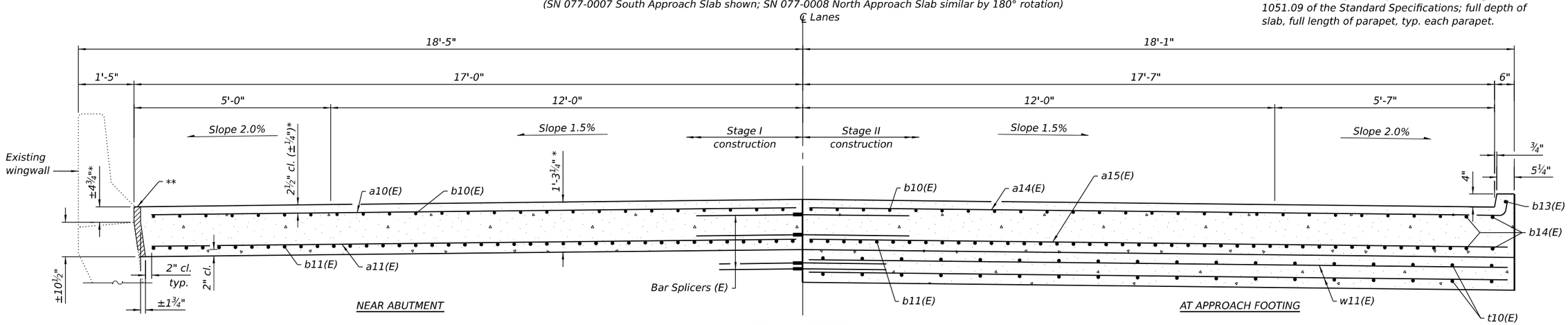

CROSS SECTION

(Looking North)

(Sheet 2 of 3)

ESCA CONSULTANTS, INC.	USER NAME = nhc	DESIGNED - ELH 08/24	REVISED -	STATE OF ILLINOIS DEPARTMENT OF TRANSPORTATION	BRIDGE APPROACH SLAB DETAILS SN 077-0007 (NB) & SN 077-0008 (SB)
	ESCA PROJECT NO.= 1423.04	CHECKED - ARD 10/24	REVISED -		
	PLOT SCALE = 0:2 ':" / in.	DRAWN - NHC 01/25	REVISED -		
	PLOT DATE = 2/3/2025	CHECKED - ELH 01/25	REVISED -		SHEET 14 OF 39 SHEETS

F.A.I. RTE.	SECTION	COUNTY	TOTAL SHEETS	SHEET NO.
57	D9 BRIDGE REPAIR 25-4	PULASKI	103	77
		CONTRACT NO. 78A80		
		ILLINOIS FED. AID PROJECT		

MODEL: Sheet
FILE NAME: Y:\IDOT\1423-04_78A80\CADD\SP SN 077-0007_0008\0770007-78A80-14-ApproachSlabDtls.dgn
2/3/2025 11:22:06 AM

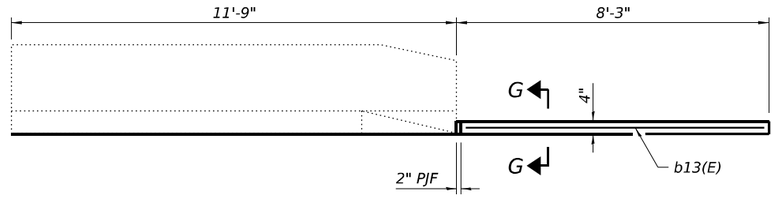

INSIDE ELEVATION OF PARAPET AND CURB

(At bridge entrance ends)

Notes:
- Approach slab shall be placed to match existing elevations.
- Approach slab shall be paid for as Concrete Superstructure (Approach Slab).
- Approach footing concrete shall be paid for as Concrete Structures.
- The approach footing maximum applied service bearing pressure (Qmax) = 2.0 ksf.
- Cost of excavation for approach footing included with Concrete Structures.
- For Granular Backfill for Structures and drainage treatment details, see Sheet 2 of 39.
- See Sheet 11 of 39 for concrete diaphragm details.

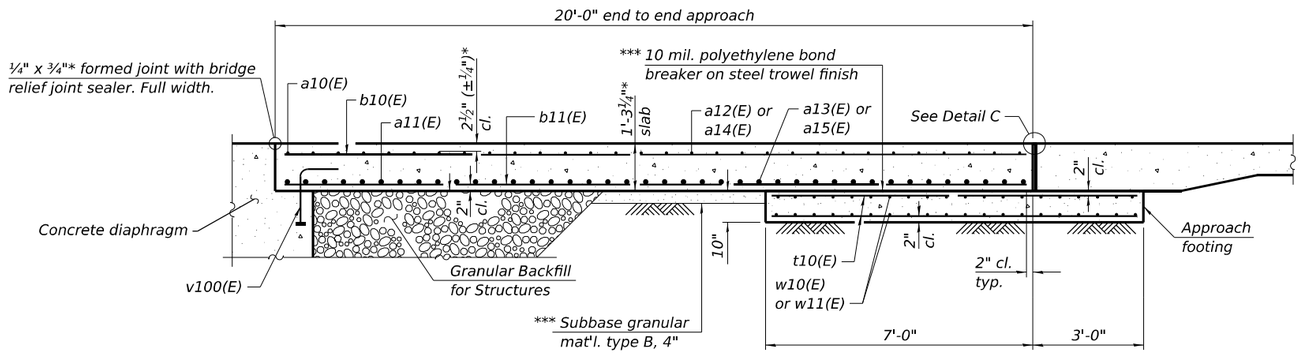

SECTION F-F

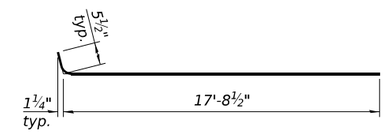

BAR a14(E)

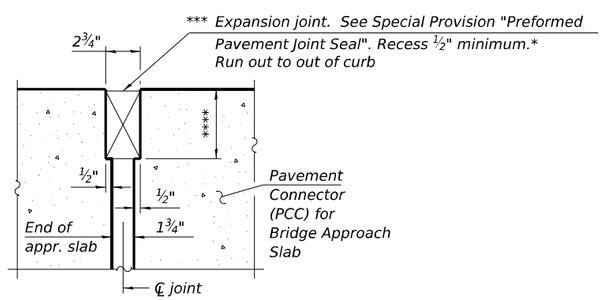

DETAIL C

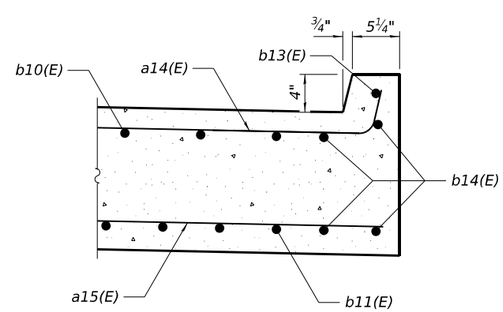

SECTION G-G

* Prior to grinding

*** Cost included with Concrete Superstructure (Approach Slab).

**** Per manufacturer recommendations

SN 077-0007 TWO APPROACHES BILL OF MATERIAL

Bar	No.	Size	Length	Shape
a10(E)	72	#5	16'-4"	
a11(E)	96	#8	16'-4"	
a12(E)	24	#5	17'-1"	
a13(E)	32	#8	17'-1"	
a14(E)	24	#5	18'-2"	
a15(E)	32	#8	17'-9"	
b10(E)	100	#5	19'-8"	
b11(E)	160	#9	19'-8"	
b12(E)	4	#5	9'-1"	
b13(E)	2	#4	7'-9"	
b14(E)	8	#5	7'-9"	
t10(E)	144	#4	9'-8"	
w10(E)	80	#5	17'-1"	
w11(E)	80	#5	17'-9"	
Concrete Superstructure (Approach Slab)			Cu. Yd.	64.7
Concrete Structures			Cu. Yd.	22.0
Reinforcement Bars, Epoxy Coated			Pound	25,980

SN 077-0008 TWO APPROACHES BILL OF MATERIAL

Bar	No.	Size	Length	Shape
a10(E)	72	#5	16'-4"	
a11(E)	96	#8	16'-4"	
a12(E)	24	#5	17'-1"	
a13(E)	32	#8	17'-1"	
a14(E)	24	#5	18'-2"	
a15(E)	32	#8	17'-9"	
b10(E)	100	#5	19'-8"	
b11(E)	160	#9	19'-8"	
b12(E)	4	#5	9'-1"	
b13(E)	2	#4	7'-9"	
b14(E)	8	#5	7'-9"	
t10(E)	144	#4	9'-8"	
w10(E)	80	#5	17'-1"	
w11(E)	80	#5	17'-9"	
Concrete Superstructure (Approach Slab)			Cu. Yd.	64.7
Concrete Structures			Cu. Yd.	22.0
Reinforcement Bars, Epoxy Coated			Pound	25,980

(Sheet 3 of 3)

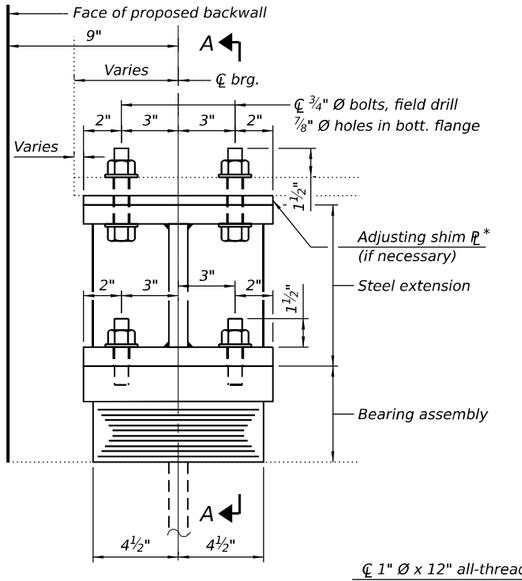

ELEVATION AT ABUT.

*¼" shim plate is required at Beam 4 and 11

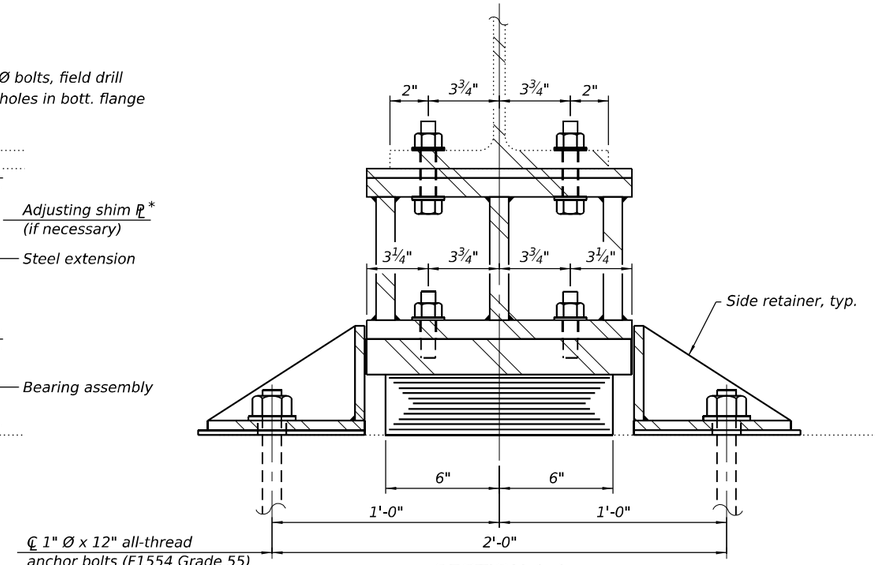

SECTION A-A

TYPE I ELASTOMERIC EXP. BRG.

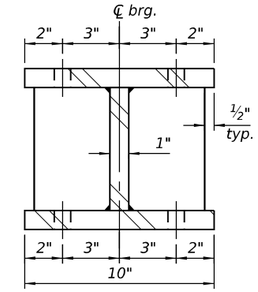

SECTION B-B

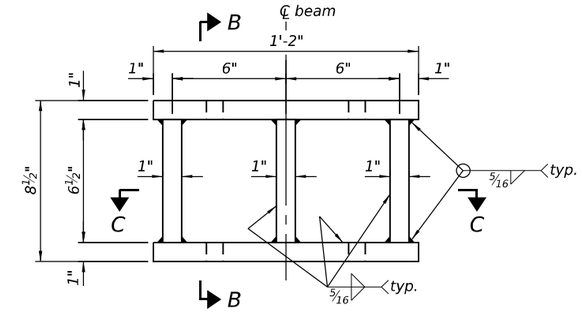

ELEVATION

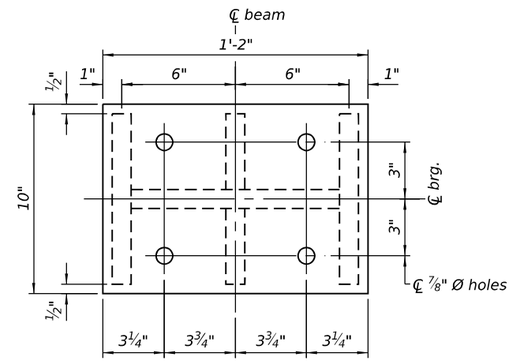

PLAN

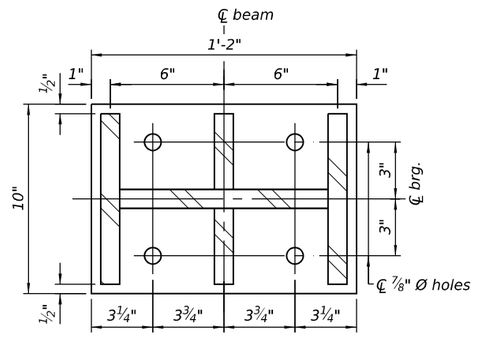

SECTION C-C

FABRICATED STEEL EXTENSION

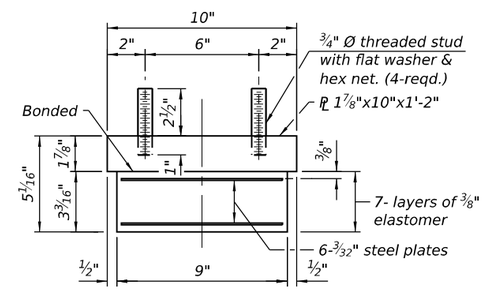

BEARING ASSEMBLY

Note:
Shim plates shall not be placed under bearing assembly.

Notes:

Prior to ordering any material, the Contractor shall verify in the field all bearing height and shim thickness dimensions.

Side retainers and stainless steel plates shall be included in the cost of Elastomeric Bearing Assembly, Type I.

The cost of new steel extensions, shim plates, connection bolts through the beam flanges, and field drilling holes in the beam bottom flanges are included with Furnishing and Erecting Structural Steel.

Minimum jack capacity = 50 Ton.

Two ⅛ inch adjusting shims shall be provided for each bearing in addition to all other plates or shims and placed as shown on bearing details.

¼ inch shim plates are required at the center beams (Beams 4 and 11) at the North and South Abutments.

Drilled and set anchor bolts shall be installed according to Article 521.06 of the Standard Specifications.

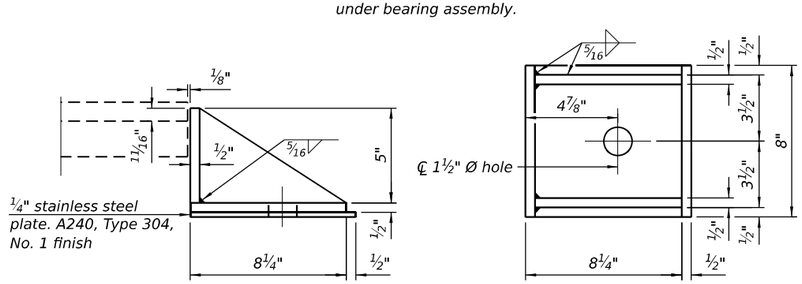

SIDE RETAINER

Equivalent rolled angle with stiffeners will be allowed in lieu of welded plates.

BEAM REACTION TABLE

	Existing Service Loads	Proposed Service Loads
R_{DL}(k)	22.1	38.6
R_{DW}(k)	9.3	8.8
R_{LL}(k)	30.2	31.3
R_{IM}(k)	8.0	8.3
R_{TOTAL}(k)	69.6	87.0

TWO BRIDGES
BILL OF MATERIAL

Item	Unit	Total
Elastomeric Bearing Assembly, Type I	Each	28
Anchor Bolts, 1"	Each	56
Jack and Remove Existing Bearings	Each	28
Furnishing and Erecting Structural Steel	Pound	4,610

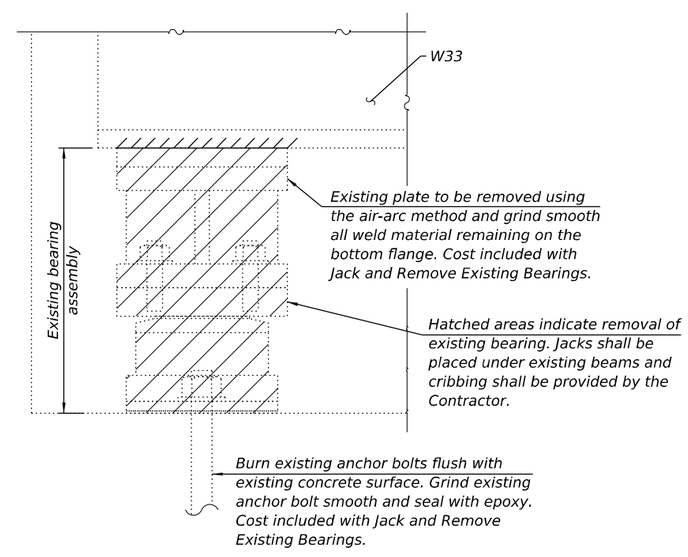

EXISTING BEARING REMOVAL DETAIL

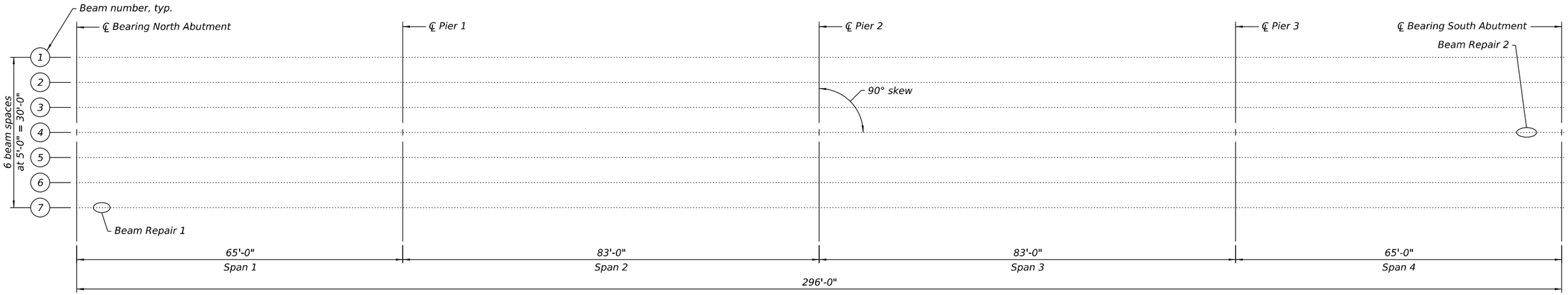

SN 077-0007 PLAN

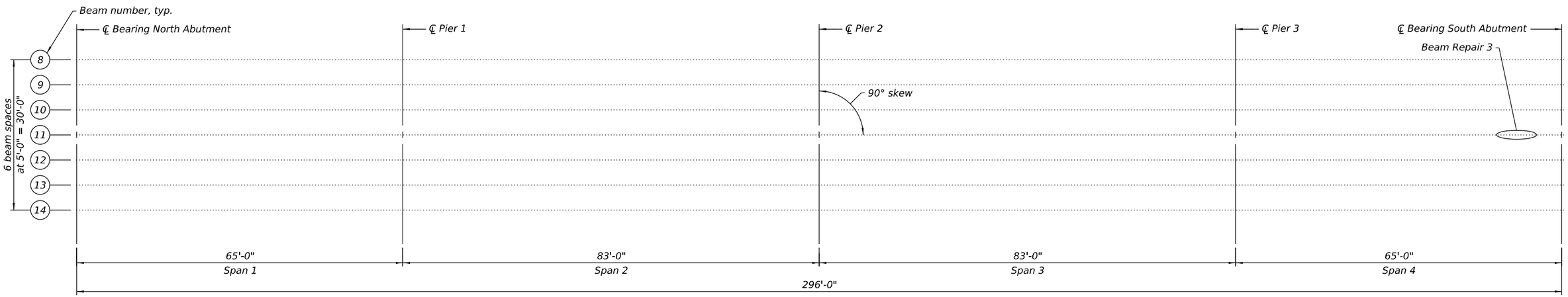

SN 077-0008 PLAN

Structural Steel Repair Notes:

All structural steel shall conform to AASHTO Classification M-270 Grade 36, unless otherwise noted.

Fasteners shall be ASTM F3125 Grade A325 Type 1, mechanically galvanized bolts. Bolts ¾" diameter, holes $^{13}/_{16}$" diameter, unless noted otherwise.

All bolt holes shall be field drilled in the existing steel using the new steel as a template. Cost included in Structural Steel Repair.

Existing structural steel that will be in contact with new structural steel shall be cleaned and painted prior to erection as required by the Special Provision "Cleaning and Painting Contact Surface Areas of Existing Steel Structures", and the Standard Specifications. The color of the final finish coat shall be Interstate Green, Munsell No. 7.5G 4/8. Cost included in Structural Steel Repair.

Cleaning and painting of contact surfaces shall meet the requirements for Primary Connections as specified in the special provision for "Cleaning and Painting Contact Surface Areas of Existing Steel Structures".

BILL OF MATERIAL

Item	Unit	SN 077-0007	SN 077-0008	Total
Structural Steel Repair	Pound	462	750	1,212

(Sheet 1 of 3)

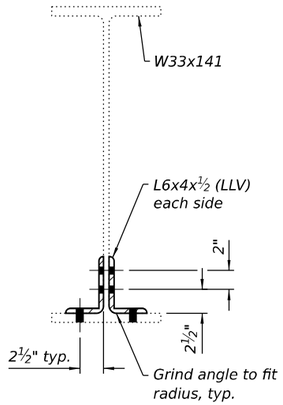

SECTION F-F

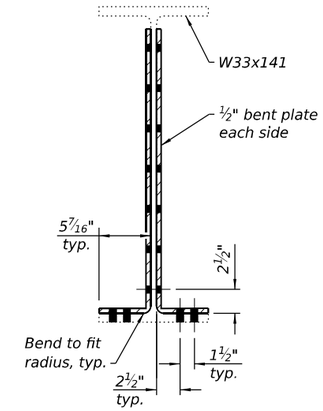

SECTION H-H

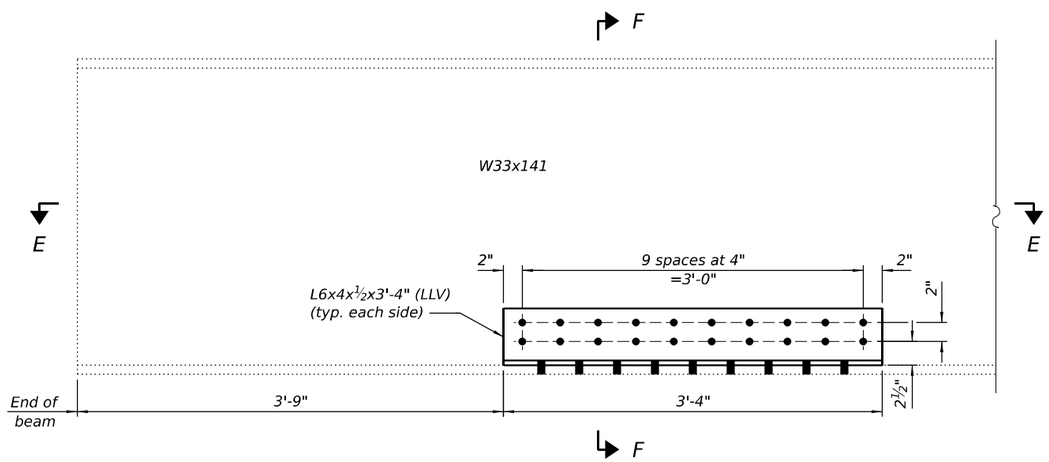

WEST ELEVATION BEAM 7 SN 077-0007

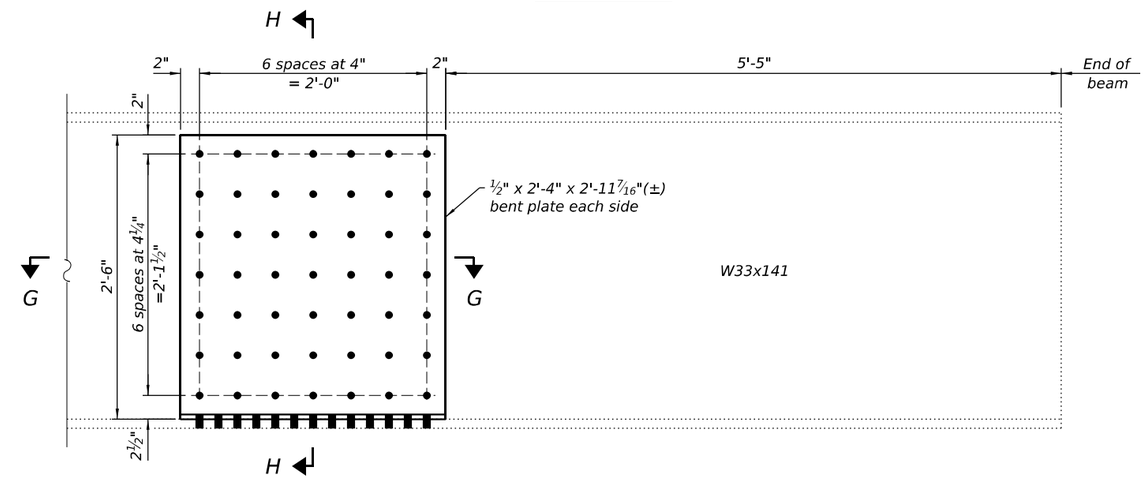

WEST ELEVATION BEAM 4 SN 077-0007

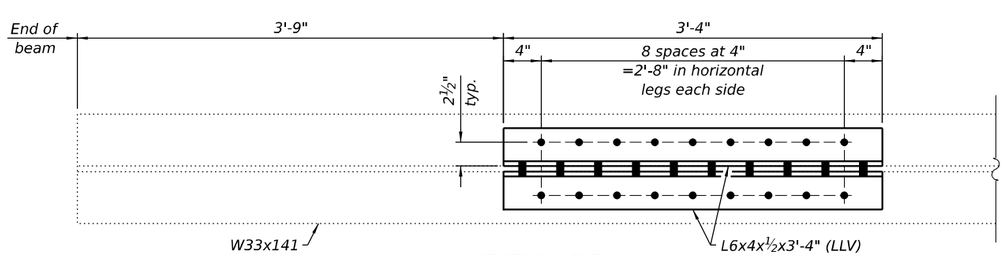

SECTION E-E

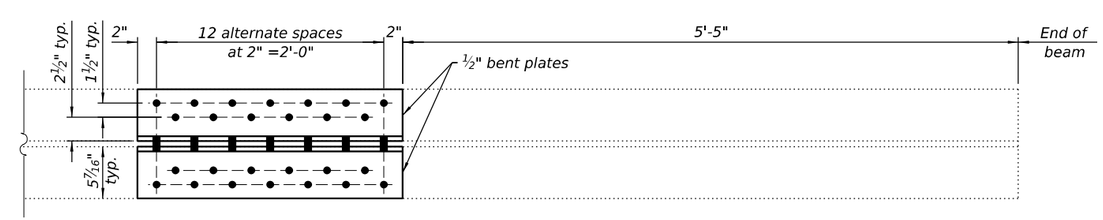

SECTION G-G

BEAM REPAIR 1 DETAILS

BEAM REPAIR 2 DETAILS

(Sheet 2 of 3)

MODEL: Sheet
FILE NAME: Y:\IDOT\1423-04_78A80\CADD\SP SN 077-0007_0008\0770007-78A80-18-SteelRepairsDtls.dgn
2/3/2025 11:22:10 AM

ESCA CONSULTANTS, INC. CIVIL & STRUCTURAL ENGINEERS

USER NAME = nhc	DESIGNED -	ELH	09/24	REVISED -	
ESCA PROJECT NO.= 1423.04	CHECKED -	ARD	10/24	REVISED -	
PLOT SCALE = 0:2 ':" / in.	DRAWN -	KAH	09/24	REVISED -	
PLOT DATE = 2/3/2025	CHECKED -	ELH	09/24	REVISED -	

STATE OF ILLINOIS
DEPARTMENT OF TRANSPORTATION

STRUCTURAL STEEL REPAIR DETAILS
SN 077-0007 (NB) & SN 077-0008 (SB)

SHEET 18 OF 39 SHEETS

F.A.I. RTE.	SECTION	COUNTY	TOTAL SHEETS	SHEET NO.
57	D9 BRIDGE REPAIR 25-4	PULASKI	103	81

CONTRACT NO. 78A80

ILLINOIS FED. AID PROJECT

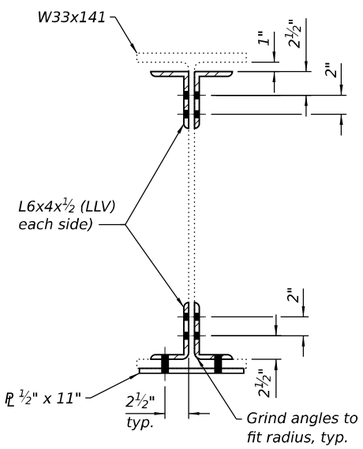

SECTION B-B

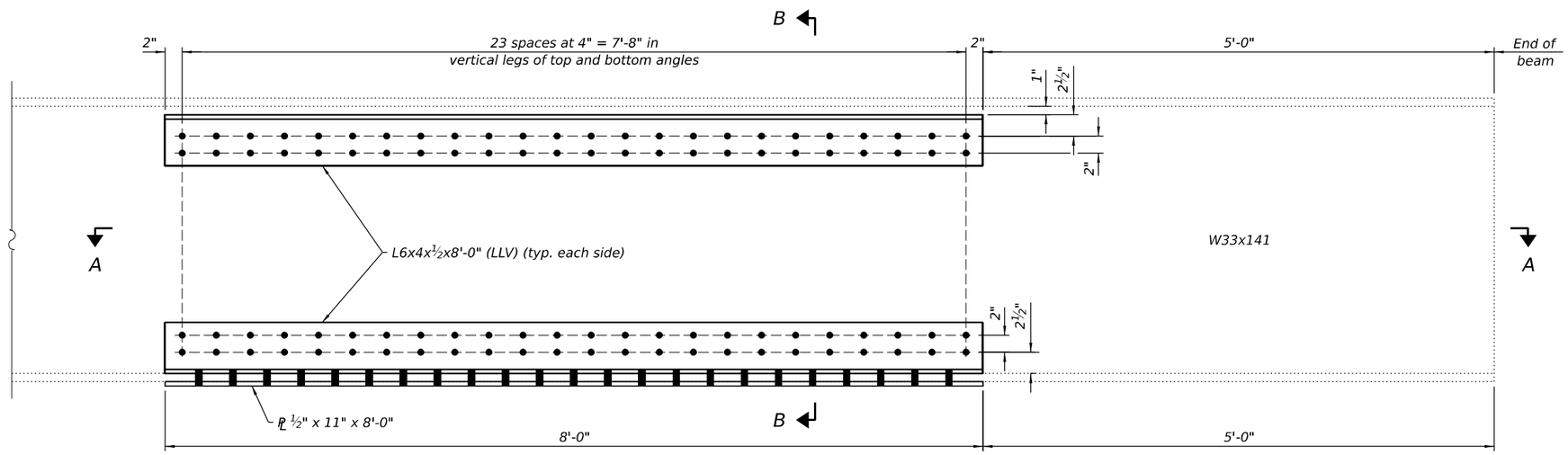

WEST ELEVATION BEAM 11 SN 077-0008

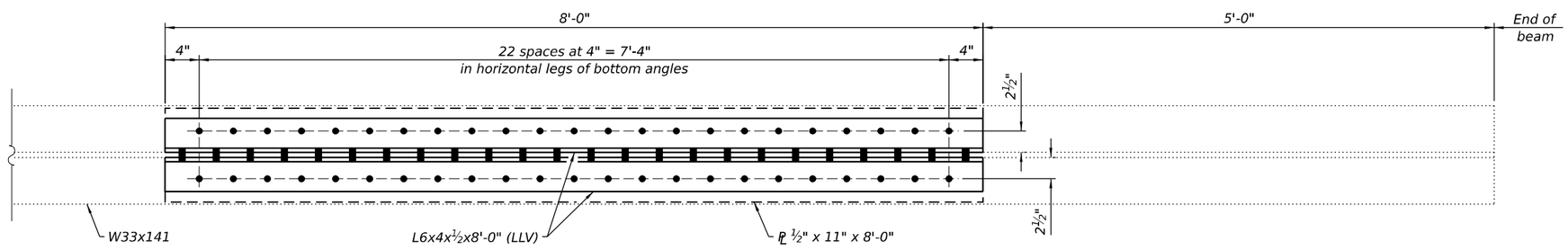

SECTION A-A

BEAM REPAIR 3 DETAILS

(Sheet 3 of 3)

MODEL: Sheet
FILE NAME: Y:\IDOT\1423-04_78A80\CADD\SP SN 077-0007_0008\0770007-78A80-19-SteelRepairsDtls.dgn

2/3/2025 11:22:10 AM

ESCA CONSULTANTS, INC.

USER NAME = nhc	DESIGNED - ELH 09/24	REVISED -	STATE OF ILLINOIS DEPARTMENT OF TRANSPORTATION	STRUCTURAL STEEL REPAIR DETAILS SN 077-0007 (NB) & SN 077-0008 (SB)	
ESCA PROJECT NO.= 1423.04	CHECKED - ARD 10/24	REVISED -			
PLOT SCALE = 0:2 ':" / in.	DRAWN - KAH 09/24	REVISED -			
PLOT DATE = 2/3/2025	CHECKED - ELH 09/24	REVISED -		SHEET 19 OF 39 SHEETS	

F.A.I. RTE.	SECTION	COUNTY	TOTAL SHEETS	SHEET NO.
57	D9 BRIDGE REPAIR 25-4	PULASKI	103	82
		CONTRACT NO. 78A80		
	ILLINOIS	FED. AID PROJECT		

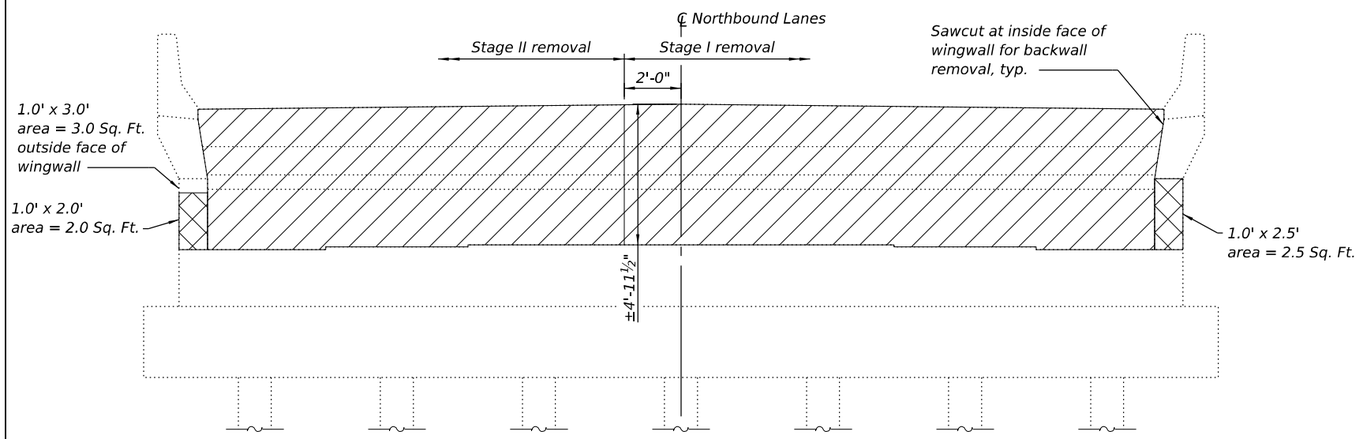

ELEVATION

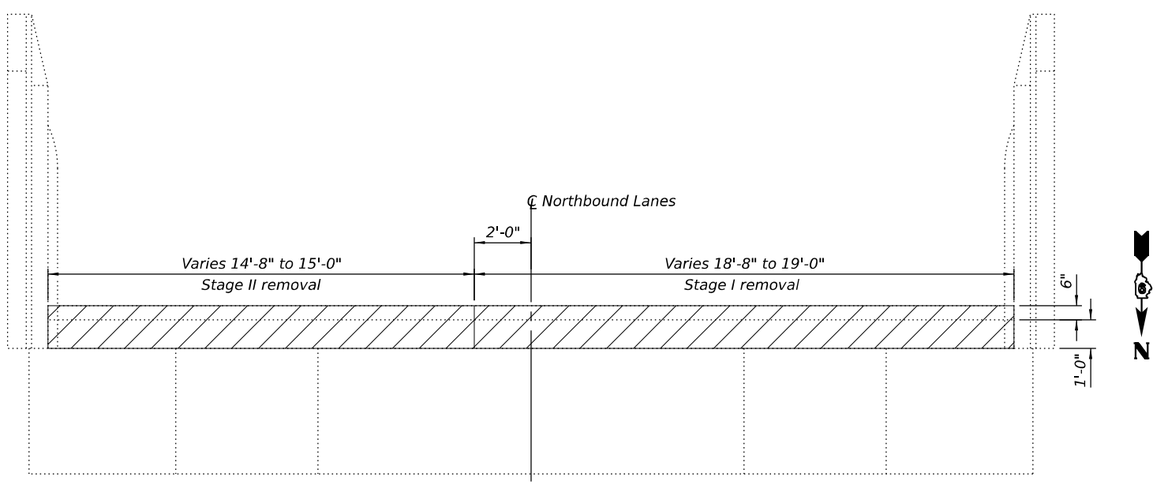

PLAN

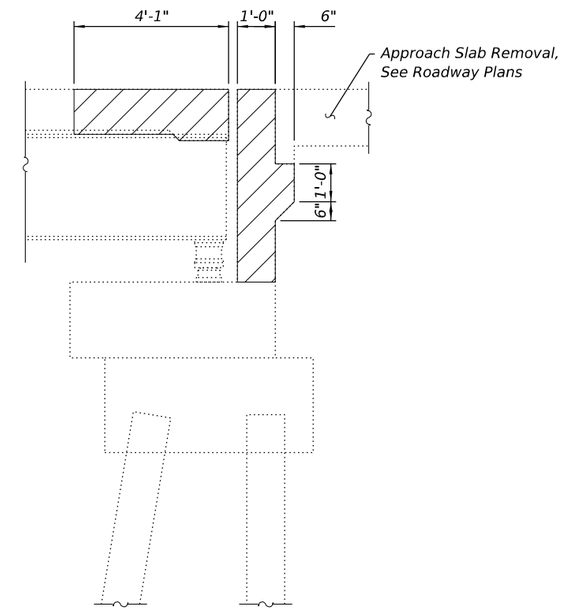

SECTION THRU ABUTMENT

SN 077-0007
SOUTH ABUTMENT BILL OF MATERIAL

Item	Unit	Total
Concrete Removal	Cu. Yd.	14.2
Structural Repair of Concrete (Depth Equal to or Less than 5 Inches)	Sq. Ft.	8

LEGEND

Concrete Removal

Structural Repair of Concrete (Depth Equal to or Less than 5 Inches)

(Sheet 1 of 4)

MODEL: Sheet
FILE NAME: Y:\IDOT\1423-04_78A80\CADD\SP SN 077-0007_0008\0770007-78A80-20-SAbutRemoval.dgn

ESCA CONSULTANTS, INC.	USER NAME = nhc	DESIGNED - ELH 08/24	REVISED -	STATE OF ILLINOIS DEPARTMENT OF TRANSPORTATION	ABUTMENT REMOVAL SN 077-0007 (NB)
	ESCA PROJECT NO.= 1423.04	CHECKED - ARD 10/24	REVISED -		
	PLOT SCALE = 0:2 ':" / in.	DRAWN - NHC 10/24	REVISED -		
	PLOT DATE = 2/3/2025	CHECKED - ELH 10/24	REVISED -		SHEET 20 OF 39 SHEETS

F.A.I. RTE.	SECTION	COUNTY	TOTAL SHEETS	SHEET NO.
57	D9 BRIDGE REPAIR 25-4	PULASKI	103	83
		CONTRACT NO. 78A80		
		ILLINOIS	FED. AID PROJECT	

2/3/2025 11:22:11 AM

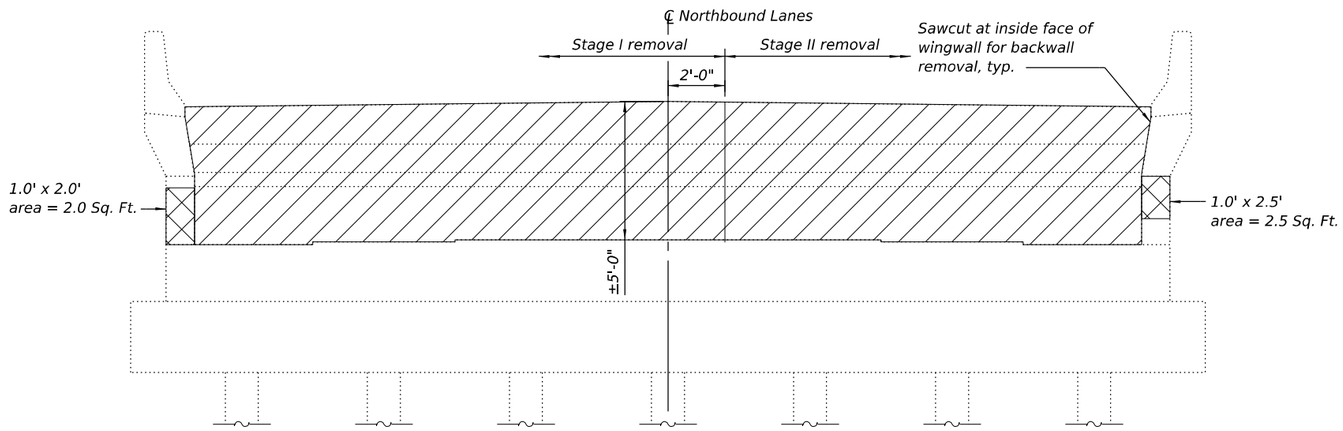

ELEVATION

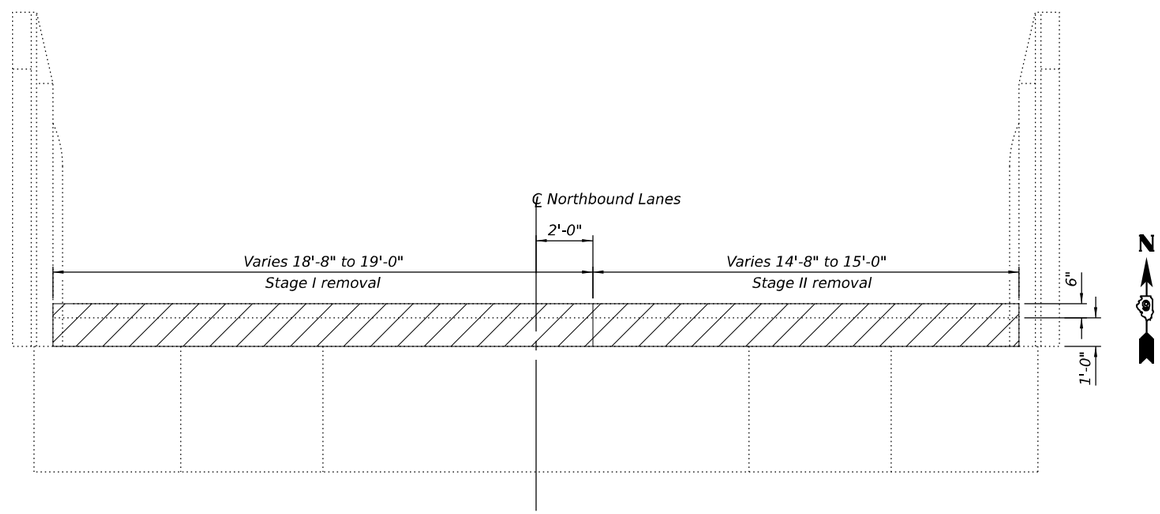

PLAN

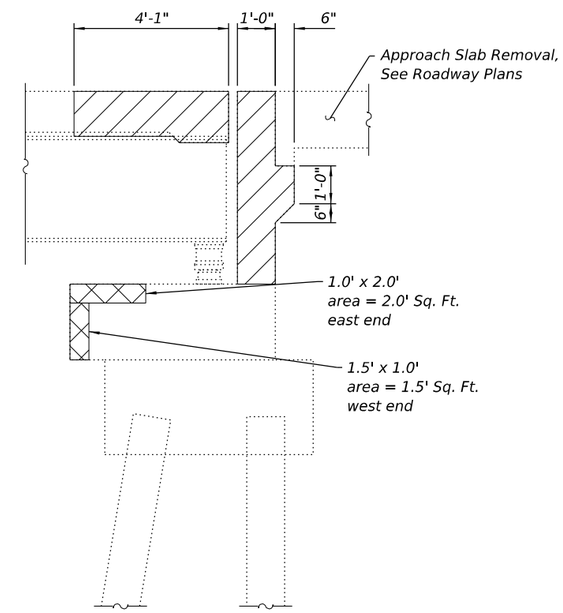

SECTION THRU ABUTMENT

SN 077-0007
NORTH ABUTMENT BILL OF MATERIAL

Item	Unit	Total
Concrete Removal	Cu. Yd.	14.2
Structural Repair of Concrete (Depth Equal to or Less than 5 Inches)	Sq. Ft.	8

LEGEND

Concrete Removal

Structural Repair of Concrete (Depth Equal to or Less than 5 Inches)

(Sheet 2 of 4)

MODEL: Sheet
FILE NAME: Y:\IDOT\1423-04_78A80\CADD\SP SN 077-0007_0008\0770007-78A80-21-NAbutRemoval.dgn

ESCA CONSULTANTS, INC. CIVIL & STRUCTURAL ENGINEERS	USER NAME = nhc	DESIGNED -	ELH	08/24	REVISED -	STATE OF ILLINOIS DEPARTMENT OF TRANSPORTATION	ABUTMENT REMOVAL SN 077-0007 (NB)	F.A.I. RTE.	SECTION	COUNTY	TOTAL SHEETS / SHEET NO.
	ESCA PROJECT NO.= 1423.04	CHECKED -	ARD	10/24	REVISED -			57	D9 BRIDGE REPAIR 25-4	PULASKI	103 / 84
	PLOT SCALE = 0:2 ':" / in.	DRAWN -	NHC	10/24	REVISED -					CONTRACT NO. 78A80	
	PLOT DATE = 2/3/2025	CHECKED -	ELH	10/24	REVISED -		SHEET 21 OF 39 SHEETS		ILLINOIS	FED. AID PROJECT	

2/3/2025 11:22:12 AM

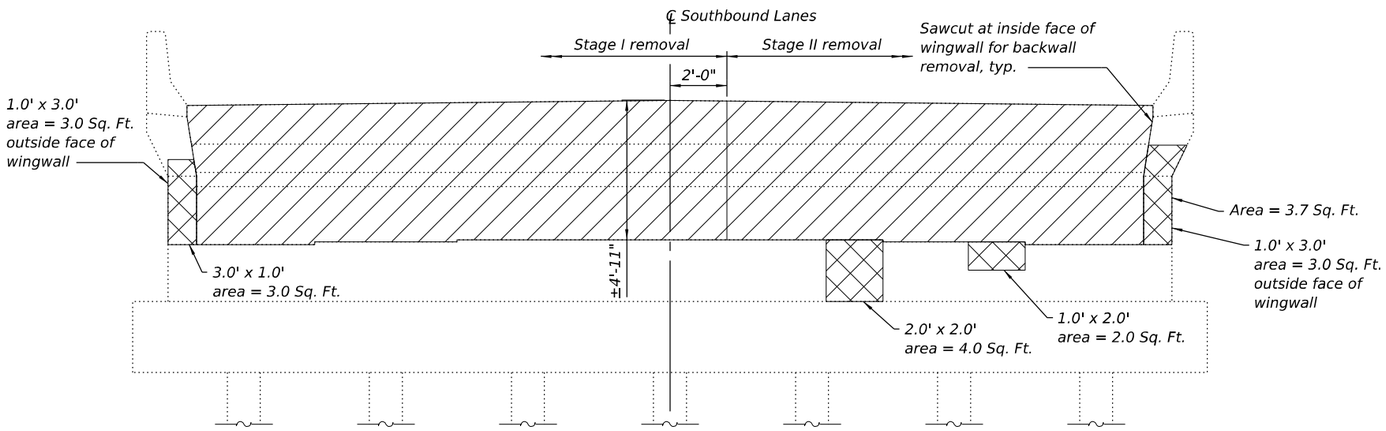

ELEVATION

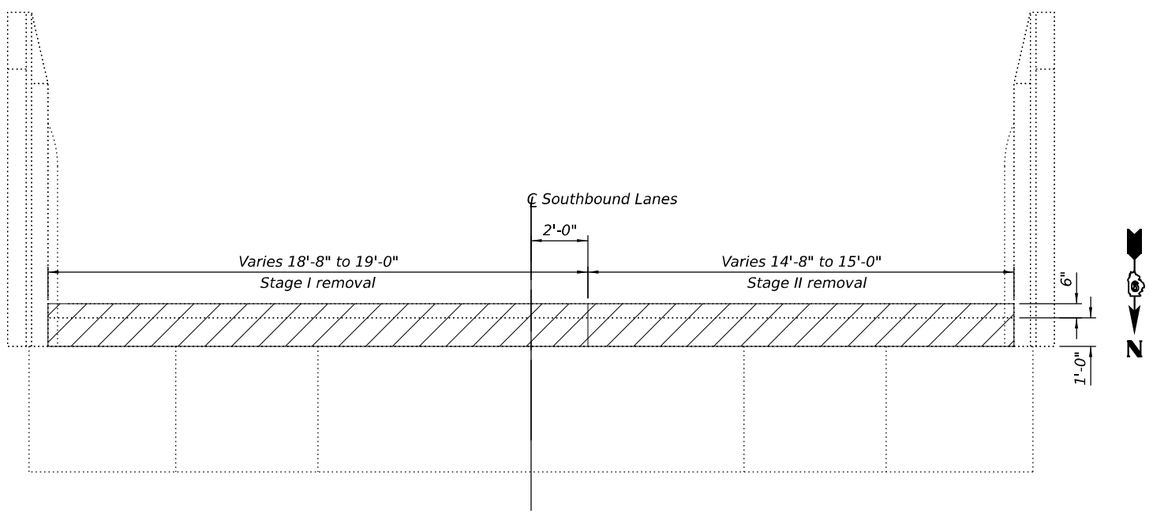

PLAN

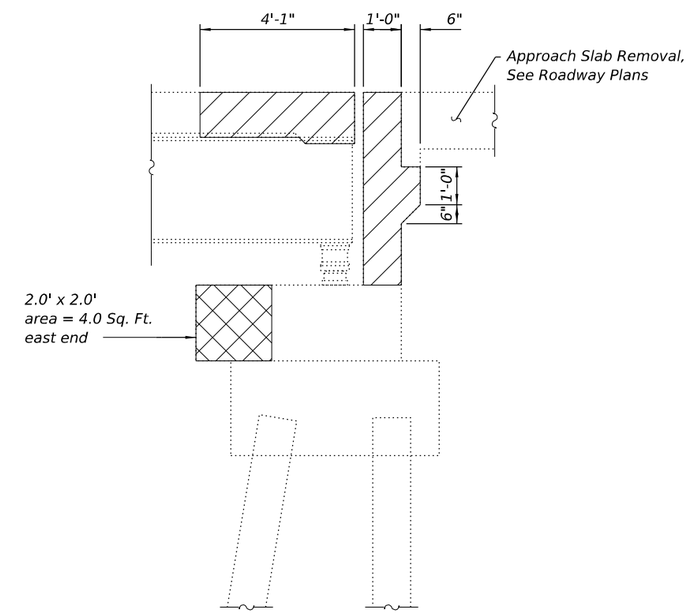

SECTION THRU ABUTMENT

SN 077-0008

SOUTH ABUTMENT BILL OF MATERIAL

Item	Unit	Total
Concrete Removal	Cu. Yd.	14.1
Structural Repair of Concrete (Depth Equal to or Less than 5 Inches)	Sq. Ft.	23

LEGEND

Concrete Removal

Structural Repair of Concrete (Depth Equal to or Less than 5 Inches)

(Sheet 3 of 4)

MODEL: Sheet
FILE NAME: Y:\IDOT\1423-04_78A80\CADD\SP SN 077-0007_0008\0770007-78A80-22-SAbutRemoval.dgn

ESCA CONSULTANTS, INC. CIVIL & STRUCTURAL ENGINEERS

USER NAME = nhc	DESIGNED -	ELH	08/24	REVISED -	
ESCA PROJECT NO.= 1423.04	CHECKED -	ARD	10/24	REVISED -	
PLOT SCALE = 0:2 ':" / in.	DRAWN -	NHC	10/24	REVISED -	
PLOT DATE = 2/3/2025	CHECKED -	ELH	10/24	REVISED -	

STATE OF ILLINOIS
DEPARTMENT OF TRANSPORTATION

ABUTMENT REMOVAL
SN 077-0008 (SB)

SHEET 22 OF 39 SHEETS

F.A.I. RTE.	SECTION	COUNTY	TOTAL SHEETS	SHEET NO.
57	D9 BRIDGE REPAIR 25-4	PULASKI	103	85

CONTRACT NO. 78A80

ILLINOIS FED. AID PROJECT

2/3/2025 11:22:13 AM

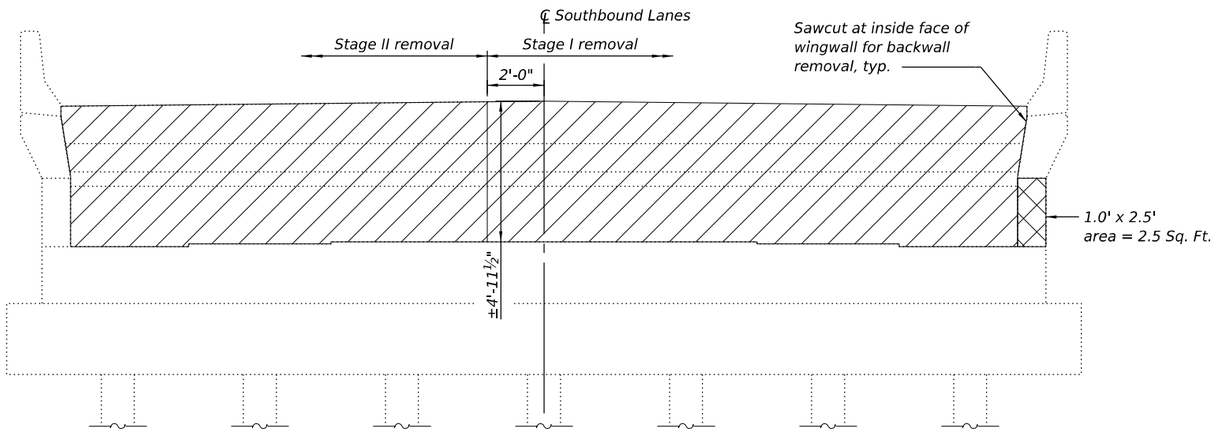

ELEVATION

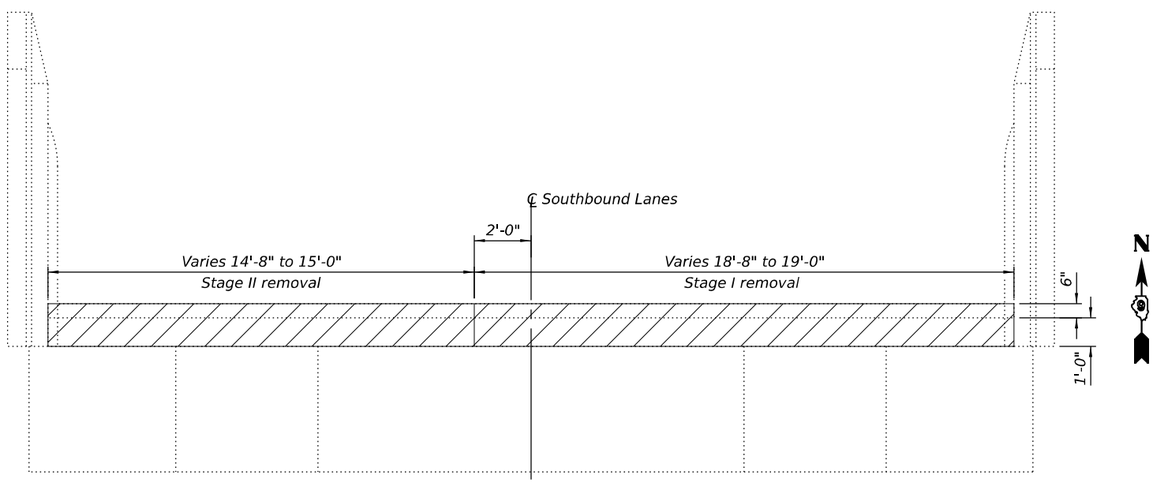

PLAN

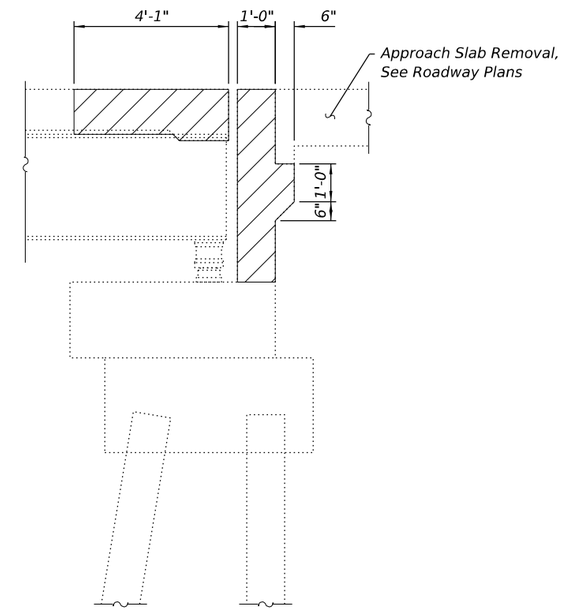

SECTION THRU ABUTMENT

SN 077-0008
NORTH ABUTMENT BILL OF MATERIAL

Item	Unit	Total
Concrete Removal	Cu. Yd.	14.1
Structural Repair of Concrete (Depth Equal to or Less than 5 Inches)	Sq. Ft.	3

LEGEND

Concrete Removal

Structural Repair of Concrete (Depth Equal to or Less than 5 Inches)

(Sheet 4 of 4)

MODEL: Sheet
FILE NAME: Y:\IDOT\1423-04_78A80\CADD\SP SN 077-0007_0008\0770007-78A80-23-NAbutRemoval.dgn

ESCA CONSULTANTS, INC.

USER NAME = nhc	DESIGNED - ELH 08/24	REVISED -	STATE OF ILLINOIS DEPARTMENT OF TRANSPORTATION	ABUTMENT REMOVAL SN 077-0008 (SB)	
ESCA PROJECT NO.= 1423.04	CHECKED - ARD 10/24	REVISED -			
PLOT SCALE = 0:2 ':" / in.	DRAWN - NHC 10/24	REVISED -			
PLOT DATE = 2/3/2025	CHECKED - ELH 10/24	REVISED -		SHEET 23 OF 39 SHEETS	

F.A.I. RTE.	SECTION	COUNTY	TOTAL SHEETS	SHEET NO.
57	D9 BRIDGE REPAIR 25-4	PULASKI	103	86
		CONTRACT NO. 78A80		
		ILLINOIS	FED. AID PROJECT	

2/3/2025 11:22:13 AM

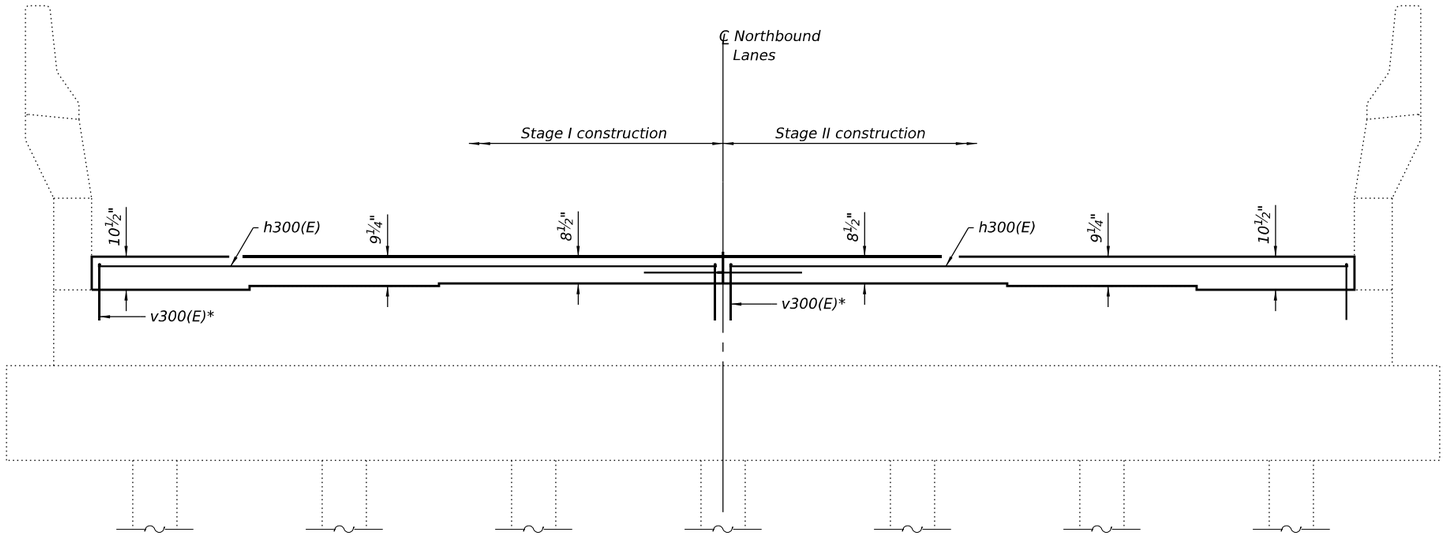

ELEVATION

SN 077-0007 North Abutment shown, other abutments similar

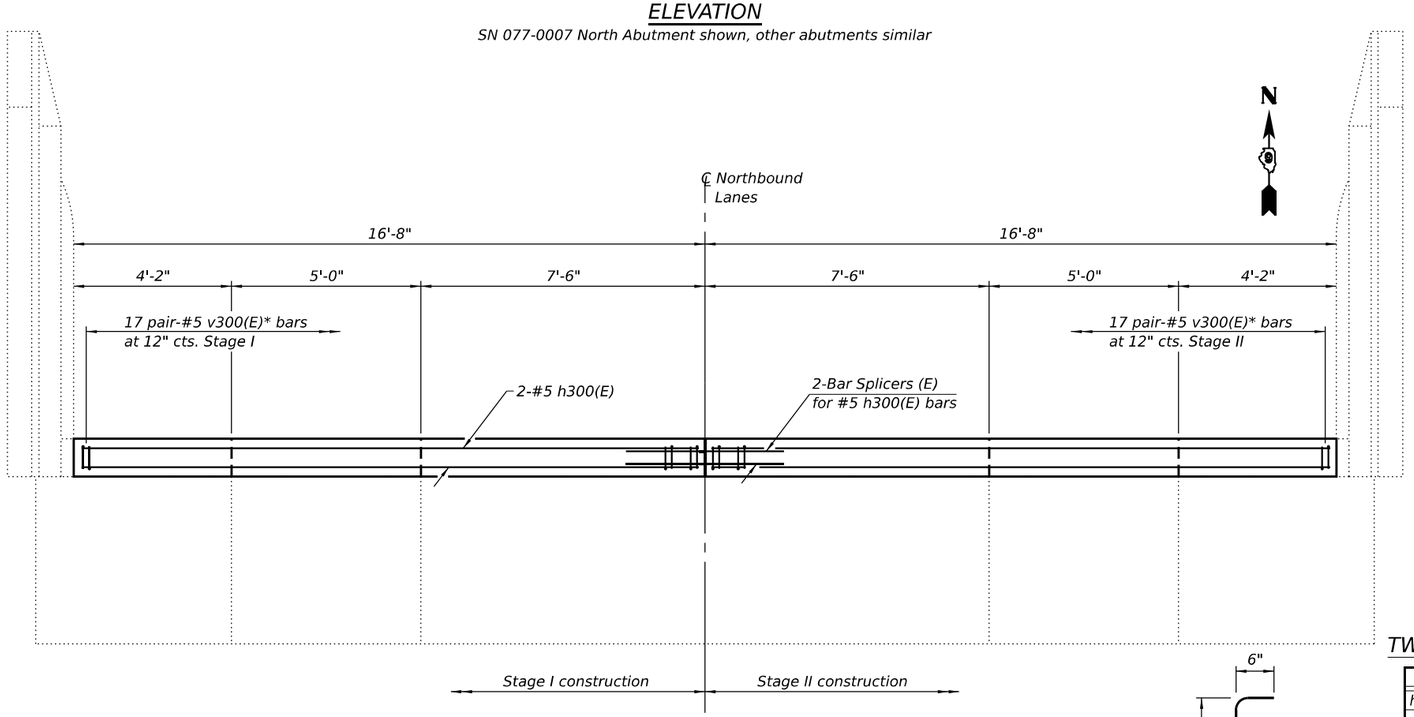

PLAN

SN 077-0007 North Abutment shown, other abutments similar

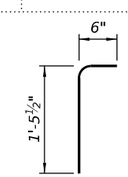

Bar v300(E)

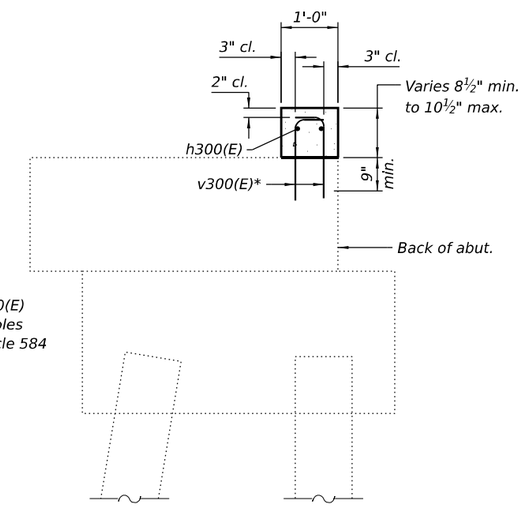

*Epoxy grout v300(E) bars in 9" min. holes according to Article 584 of the Standard Specifications

SECTION THRU ABUTMENT

SN 077-0007
TWO ABUTMENTS BILL OF MATERIAL

Bar	No.	Size	Length	Shape
h300(E)	8	#5	16'-4"	
v300(E)	136	#5	2'-0"	
Concrete Structures			Cu. Yd.	2.0
Reinforcement Bars, Epoxy Coated			Pound	420

SN 077-0008
TWO ABUTMENTS BILL OF MATERIAL

Bar	No.	Size	Length	Shape
h300(E)	8	#5	16'-4"	
v300(E)	136	#5	2'-0"	
Concrete Structures			Cu. Yd.	2.0
Reinforcement Bars, Epoxy Coated			Pound	420

MODEL: Sheet
FILE NAME: Y:\IDOT\1423-04_78A80\CADD\SP SN 077-0007_0008\0770007-78A80-24-AbutDtls.dgn

2/3/2025 11:22:14 AM

ESCA CONSULTANTS, INC. CIVIL & STRUCTURAL ENGINEERS

USER NAME = nhc	DESIGNED -	ELH	08/24	REVISED -	
ESCA PROJECT NO.= 1423.04	CHECKED -	ARD	10/24	REVISED -	
PLOT SCALE = 0:2 ':" / in.	DRAWN -	NHC	10/24	REVISED -	
PLOT DATE = 2/3/2025	CHECKED -	ELH	10/24	REVISED -	

STATE OF ILLINOIS
DEPARTMENT OF TRANSPORTATION

ABUTMENT DETAILS
SN 077-0007 (NB) & SN 077-0008 (SB)

SHEET 24 OF 39 SHEETS

F.A.I. RTE.	SECTION	COUNTY	TOTAL SHEETS	SHEET NO.
57	D9 BRIDGE REPAIR 25-4	PULASKI	103	87

CONTRACT NO. 78A80

ILLINOIS FED. AID PROJECT

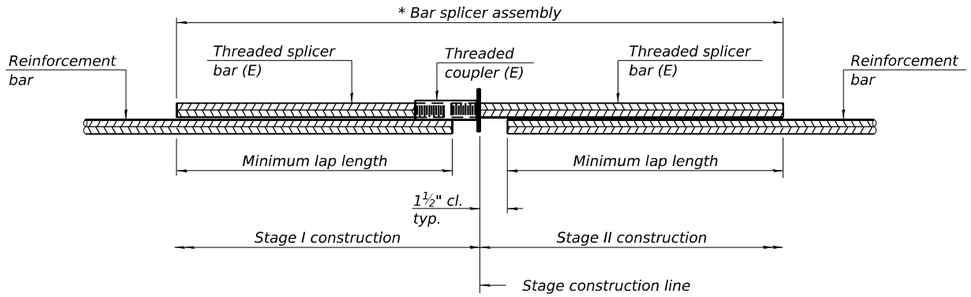

STANDARD BAR SPLICER ASSEMBLY PLAN

Only bar splicer assemblies as presented on the approved QPL list may be used.

Threaded splicer bar length = min. lap length + 1½" + thread length

* Epoxy not required on Bar Splicer Assembly components used in conjunction with black bars.

Location	Bar size	No. assemblies required	Minimum lap length
077-0007 Concrete Wearing Surface	#4	289	2'-5"
077-0008 Concrete Wearing Surface	#4	289	2'-5"
077-0007 North End of Deck	#5	21	3'-4"
077-0007 South End of Deck	#5	21	3'-4"
077-0008 North End of Deck	#5	21	3'-4"
077-0008 South End of Deck	#5	21	3'-4"
077-0007 North Diaphragm	#6	5	4'-0"
077-0007 North Diaphragm	#4	2	2'-5"
077-0007 South Diaphragm	#6	5	4'-0"
077-0007 South Diaphragm	#4	2	2'-5"
077-0008 North Diaphragm	#6	5	4'-0"
077-0008 North Diaphragm	#4	2	2'-5"
077-0008 South Diaphragm	#6	5	4'-0"
077-0008 South Diaphragm	#4	2	2'-5"
077-0007 North Approach Footing	#5	40	3'-0"
077-0007 South Approach Footing	#5	40	3'-0"
077-0008 North Approach Footing	#5	40	3'-0"
077-0008 South Approach Footing	#5	40	3'-0"
077-0007 North Approach Slab	#5	30	3'-4"
077-0007 North Approach Slab	#8	40	4'-9"
077-0007 South Approach Slab	#5	30	3'-4"
077-0007 South Approach Slab	#8	40	4'-9"
077-0008 North Approach Slab	#5	30	3'-4"
077-0008 North Approach Slab	#8	40	4'-9"
077-0008 South Approach Slab	#5	30	3'-4"
077-0008 South Approach Slab	#8	40	4'-9"
077-0007 North Abutment	#5	2	3'-1"
077-0007 South Abutment	#5	2	3'-1"
077-0008 North Abutment	#5	2	3'-1"
077-0008 South Abutment	#5	2	3'-1"

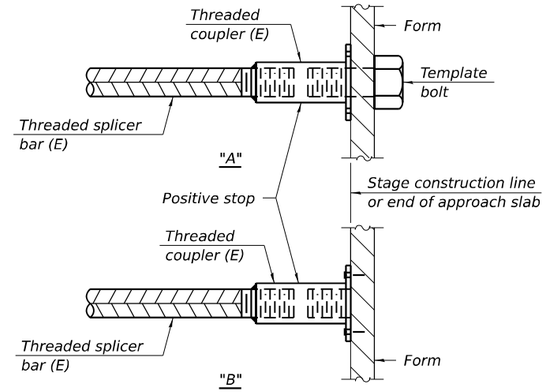

INSTALLATION AND SETTING METHODS

"A" : Set bar splicer assembly by means of a template bolt.
"B" : Set bar splicer assembly by nailing to wood forms or cementing to steel forms.
(E) : Indicates epoxy coating.

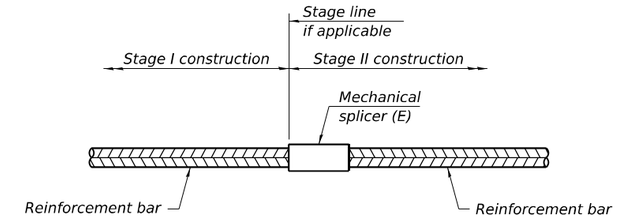

STANDARD MECHANICAL SPLICER

Location	Bar size	No. assemblies required
NA		

Notes:
Splicer bars shall be deformed with threaded ends and have a minimum 60 ksi yield strength.
All reinforcement shall be lapped and tied to the splicer bars.
Bar splicer assemblies shall be epoxy coated according to the requirements for reinforcement bars. See Section 508 of the Standard Specifications.
See approved list of bar splicer assemblies and mechanical splicers for alternatives.

BSD-1 5-15-2023

F. A. I. RTE.	SECTION	COUNTY	TOTAL SHEETS	SHEET NO
57	77-(1,2)RS-2	PULASKI	73	65
STA.		TO STA.		
FED. ROAD DIST. NO.	ILLINOIS	FED. AID PROJECT		

SHEET NO. 6
OF 14 SHEETS

STATE OF ILLINOIS
DEPARTMENT OF TRANSPORTATION

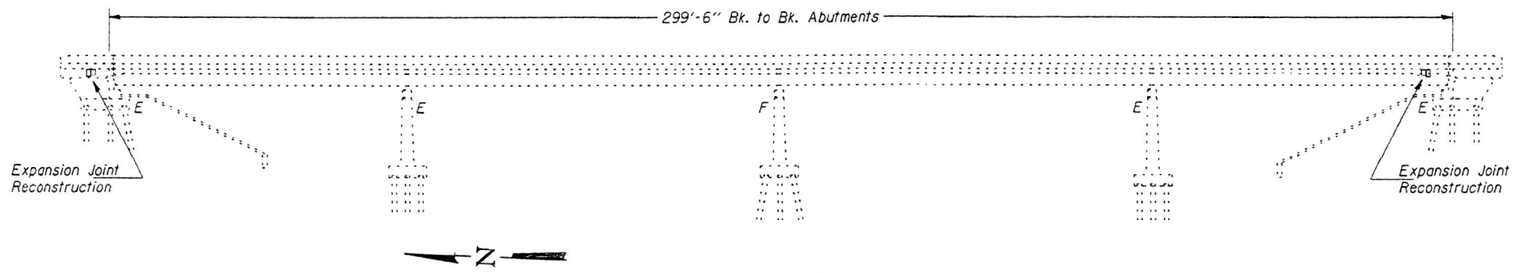

ELEVATION

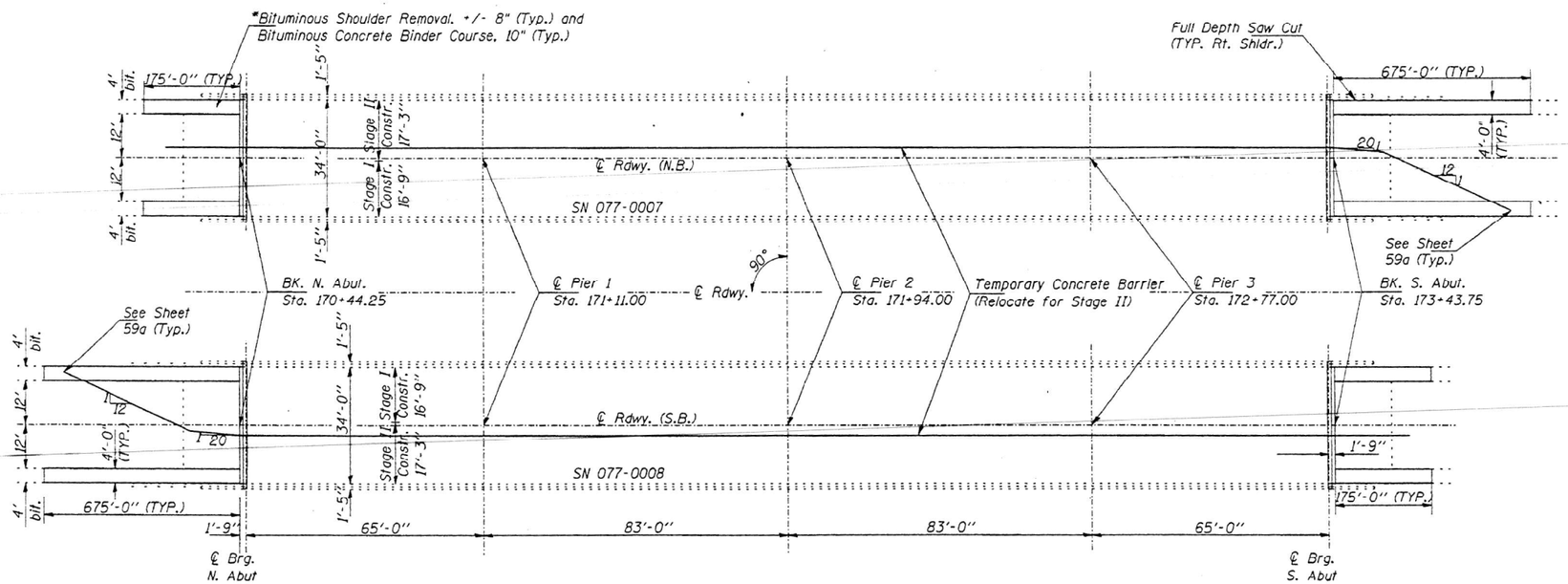

PLAN

GENERAL NOTES

Plan dimensions and details relative to existing structure have been taken from existing plans and are subject to nominal construction variations. It shall be the Contractor's responsibility to verify such dimensions and details in the field and make necessary approved adjustments prior to construction or ordering of materials. Such variations shall not be cause for additional compensation for a change in the scope of the work, however, the Contractor will be paid for the quantity actually furnished at the unit price bid for the work.

The existing structural steel coating contains lead. The Contractor should take appropriate precautions to deal with the presence of lead on this project.

Protective coat shall be applied to the bridge deck Microsilica Concrete Overlay in accordance with article 503.19 of the Standard Specifications. The seasonal exception shall not apply. The rate of application for each coat on saw cut grooved areas shall be 25 Sq. Yds. per gallon of mixture.

Prior to pouring the new concrete deck, all loose rust, loose mill scale, and other loose potentially detrimental foreign material shall be removed from the surface of the beams or girders in contact with concrete. The cost of this work will be included in the pay item covering removal of the existing concrete. All heavy rust and other tightly adhered potentially detrimental foreign matter shall also be removed from the surfaces of the beams or girders in contact with concrete. Tightly adhered paint may remain unless otherwise noted. This removal shall be accomplished by methods that will not damage the steel. The cost of this work will be paid for according to Article 109.04.

Reinforcement bars shall conform to the requirements of ~~AASHTO M-31, M-42 or M-53 Grade 60.~~

Joint openings shall be adjusted according to Article 503-10(c) of the Standard Specifications when the deck is poured at an ambient temperature other than 50° F.

Traffic control for these structures shall follow Standard 701402.

Shoulder work must be completed before the barrier wall is erected.

The quantity of Formed Concrete Repair (Depth equal to or less than 5") is for the abutment backwalls. Any repairs required that are a result of damage done by the contractor during the removal of the hatchblock area shall be at the expense of the contractor.

* The Contractor will be allowed the option of placing P.C.C. Pavement in lieu of the Bituminous Concrete used in preparing shoulders for staged traffic. There will be no additional compensation if the P.C.C. Pavement is used.

TOTAL BILL OF MATERIAL

ITEM	UNIT	QUANITY
Bituminous Shoulder Removal	Sq. Yd.	1511
Bituminous Concrete Binder Course, Superpave	Ton	846
Temporary Concrete Barrier	Ft.	980
Relocate Temporary Concrete Barrier	Ft.	980
Bituminous Concrete Removal (Deck)	Sq. Yd.	2258
Bridge Deck Hydroscarification (1/2 inch)	Sq. Yd.	2214
Deck Slab Repair (Full Depth, Type II)	Sq. Yd.	40
Approach Slab Repair (Partial Depth)	Sq. Yd.	6
Concrete Removal	Cu. Yd.	18.3
Reinforcement Bars, Epoxy Coated	Lb	2640
Bar Splicers	Each	48
Concrete Superstructure	Cu. Yd.	20.6
Polymer Concrete	Cu. Ft.	10
Silicone Joint Sealer, 1½"	Ft.	144
Formed Concrete Repair (Depth ≤ 5")	Sq. Ft.	21
Bridge Deck Microsilica Concrete Overlay	Sq. Yd.	2214
Bridge Deck Grooving	Sq. Yd.	2114
Protective Coat	Sq. Yd.	2246

Sequence of Construction

1. Shoulder Reconstruction
2. Remove Stage I Areas
3. Perform Stage I Deck Repairs, Reconstruct Expansion Joints and Install Overlay
4. Remove Stage II Areas
5. Perform Stage II Deck Repairs, Reconstruct Expansion Joints and Install Overlay

Design Stresses
(New Construction)

f'c = 3,500 psi (concrete)
fy = 60,000 psi (reinforcement)

Scope of Work

Replace shoulder with bituminous concrete binder course
Remove existing Bituminous Surface
Scarify existing deck surface
Deck Patching
Reconstruct expansion joints at all abutments and at Piers 1 & 4 with silicone sealer and Polymer Concrete Nosings.
Microsilica Concrete Overlay

GENERAL PLAN
F.A.I. ROUTE 57 OVER CACHE RIVER OVERFLOW
PULASKI COUNTY STA. 171+94
S.N. 077-0007 (N.B.)
S.N. 077-0008 (S.B.)

DESIGNED	T. Wayne Halstead
CHECKED	MAS
DRAWN	T. Wayne Halstead
CHECKED	TWH MAS

MODEL: Sheet
FILE NAME: Y:\IDOT\1423-04_78A80\CADD\SP SN 077-0007_0008\07700007-78A80-26-ExistingBridgePlans.dgn
2/3/2025 11:22:16 AM

ESCA CONSULTANTS, INC. CIVIL & STRUCTURAL ENGINEERS

USER NAME = nhc	DESIGNED -	ELH	09/24	REVISED -	
ESCA PROJECT NO.= 1423.04	CHECKED -	ARD	10/24	REVISED -	
PLOT SCALE = 0:2 ':" / in.	DRAWN -	IRC	09/24	REVISED -	
PLOT DATE = 2/3/2025	CHECKED -	ELH	09/24	REVISED -	

STATE OF ILLINOIS
DEPARTMENT OF TRANSPORTATION

EXISTING BRIDGE PLANS - FOR INFORMATION ONLY
SN 077-0007 (NB) & SN 077-0008 (SB)
SHEET 26 OF 39 SHEETS

F.A.I. RTE.	SECTION	COUNTY	TOTAL SHEETS	SHEET NO.
57	D9 BRIDGE REPAIR 25-4	PULASKI	103	89
		CONTRACT NO. 78A80		
	ILLINOIS	FED. AID PROJECT		

STATE OF ILLINOIS
DEPARTMENT OF TRANSPORTATION

F.A.I. RTE.	SECTION	COUNTY	TOTAL SHEETS	SHEET NO
57	77-11,21RS-2	PULASKI	73	68
STA.	TO STA.			
FED. ROAD DIST. NO.	ILLINOIS	FED. AID PROJECT		

SHEET NO. 9 OF 14 SHEETS

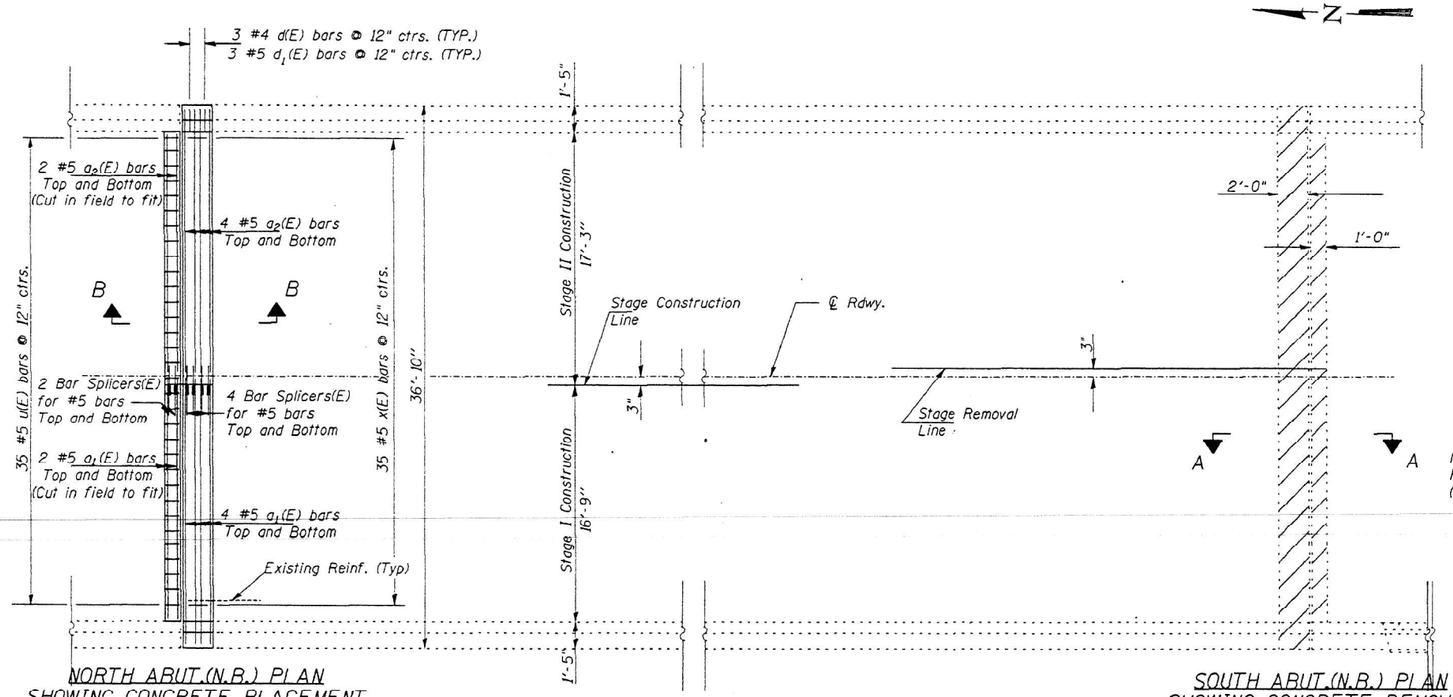

NORTH ABUT.(N.B.) PLAN
SHOWING CONCRETE PLACEMENT

South Abut. similar by 180° rotation typ. for each structure

SOUTH ABUT.(N.B.) PLAN
SHOWING CONCRETE REMOVAL

North Abut. similar by 180° rotation typ. for each structure

Note: Cost of removing existing steel plates and silicone joint sealer included with concrete removal.

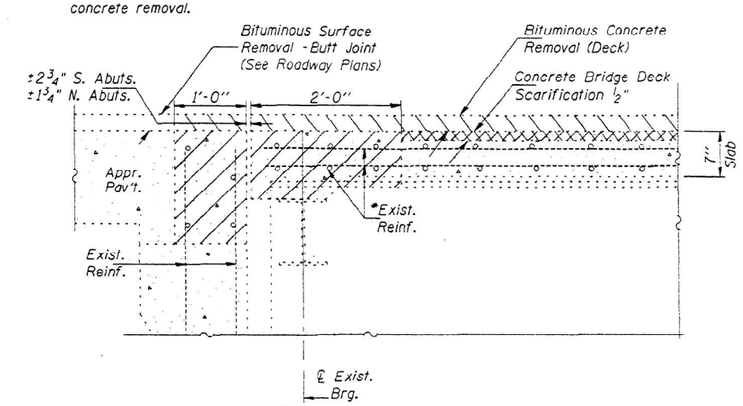

SECTION A-A

Dimensions measured @ Right Angles

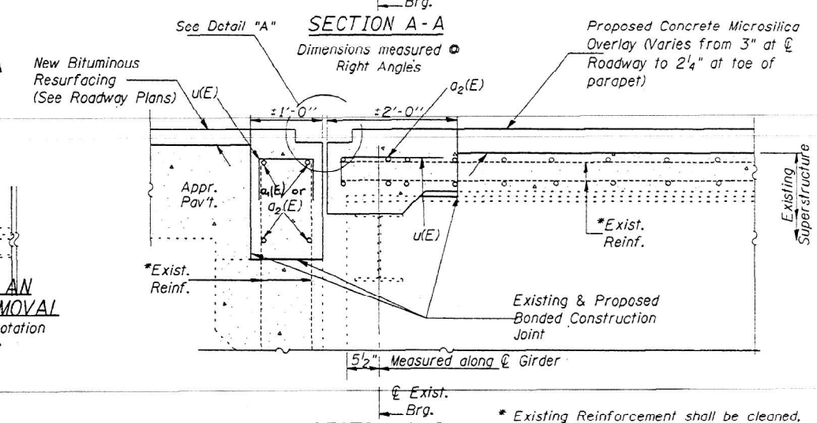

SECTION B-B

Dimensions measured @ Right Angles

* Existing Reinforcement shall be cleaned, straightened, and incorporated into the new construction. Cost included with concrete removal.

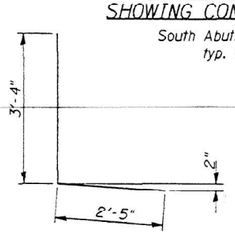

bar d(E)

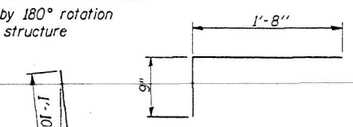

bar x(E)

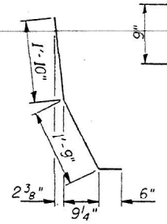

bar d_1(E)

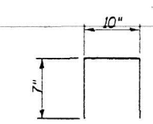

bar u(E)

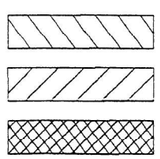

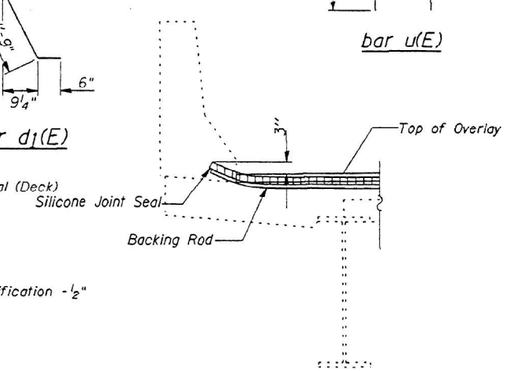

TYPICAL END OF SEAL TREATMENT

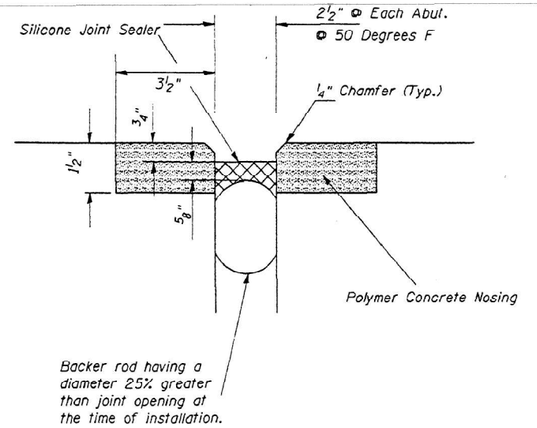

DETAIL "A"
SILICONE JOINT SEALER

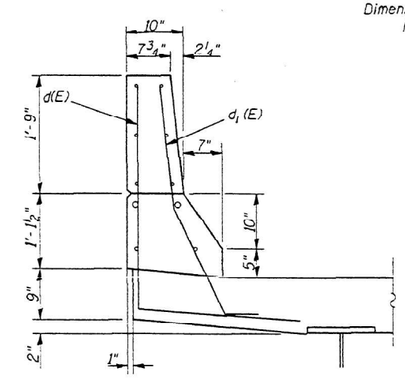

SECTION THRU PARAPET

BILL OF MATERIAL

Bar	No.	Size	Length	Shape
a_1(E)	48	#5	17'-9"	
a_2(E)	48	#5	18'-3"	
d(E)	24	#4	5'-9"	
d_1(E)	24	#5	4'-1"	
u(E)	140	#5	2'-0"	
x(E)	140	#5	2'-5"	
Concrete Removal			Cu. Yd.	18.3
Concrete Superstructure			Cu. Yd.	20.6
Reinforcement Bars, Epoxy Coated			Pound	2640

Reinforcement bars designated (E) shall be epoxy coated.

JOINT RECONSTRUCTION DETAILS
SN 077-0007 (N.B.)
SN 077-0008 (S.B.)
PULASKI COUNTY

DESIGNED	T. Wayne Halstead
CHECKED	MAS
DRAWN	T. Wayne Halstead
CHECKED	TWH MAS

ESCA CONSULTANTS, INC. CIVIL & STRUCTURAL ENGINEERS

USER NAME = nhc	DESIGNED -	ELH	09/24	REVISED -	
ESCA PROJECT NO.= 1423.04	CHECKED -	ARD	10/24	REVISED -	
PLOT SCALE = 0:2 ':" / in.	DRAWN -	IRC	09/24	REVISED -	
PLOT DATE = 2/3/2025	CHECKED -	ELH	09/24	REVISED -	

STATE OF ILLINOIS
DEPARTMENT OF TRANSPORTATION

EXISTING BRIDGE PLANS - FOR INFORMATION ONLY
SN 077-0007 (NB) & SN 077-0008 (SB)

SHEET 27 OF 39 SHEETS

F.A.I. RTE.	SECTION	COUNTY	TOTAL SHEETS	SHEET NO.
57	D9 BRIDGE REPAIR 25-4	PULASKI	103	90
		CONTRACT NO. 78A80		
		ILLINOIS	FED. AID PROJECT	

MODEL: Sheet
FILE NAME: Y:\IDOT\1423-04_78A80\CADD\SP SN 077-0007_0008\0770007-78A80-27-ExistingBridgePlans.dgn
2/3/2025 11:22:20 AM

Bench Mark: BM #111 monument set in top of N.W. handrail S.N. 077-0008 Sta. 170+47 Elev. 349.31
Existing Structures: S.N. 077-0007,0008, are 4 span continuous wide flange beam superstructures on solid wall R.C. piers on pile supported footings and R.C. seat type abutments on piles.
Bridge to remain open to traffic during retrofit. Minimum of one lane each way open at all times.

No Salvage

STATE OF ILLINOIS
DEPARTMENT OF TRANSPORTATION

ROUTE NO.	SECTION	COUNTY	TOTAL SHEETS	SHEET NO.
F.A.I. 57	*	PULASKI	24	10
FED. ROAD DIST. NO. 7		ILLINOIS	FED. AID PROJECT-	

SHEET NO. 1
8 SHEETS

* 77 (1B, 1B-1, 1B-2) I-1

ELEVATION

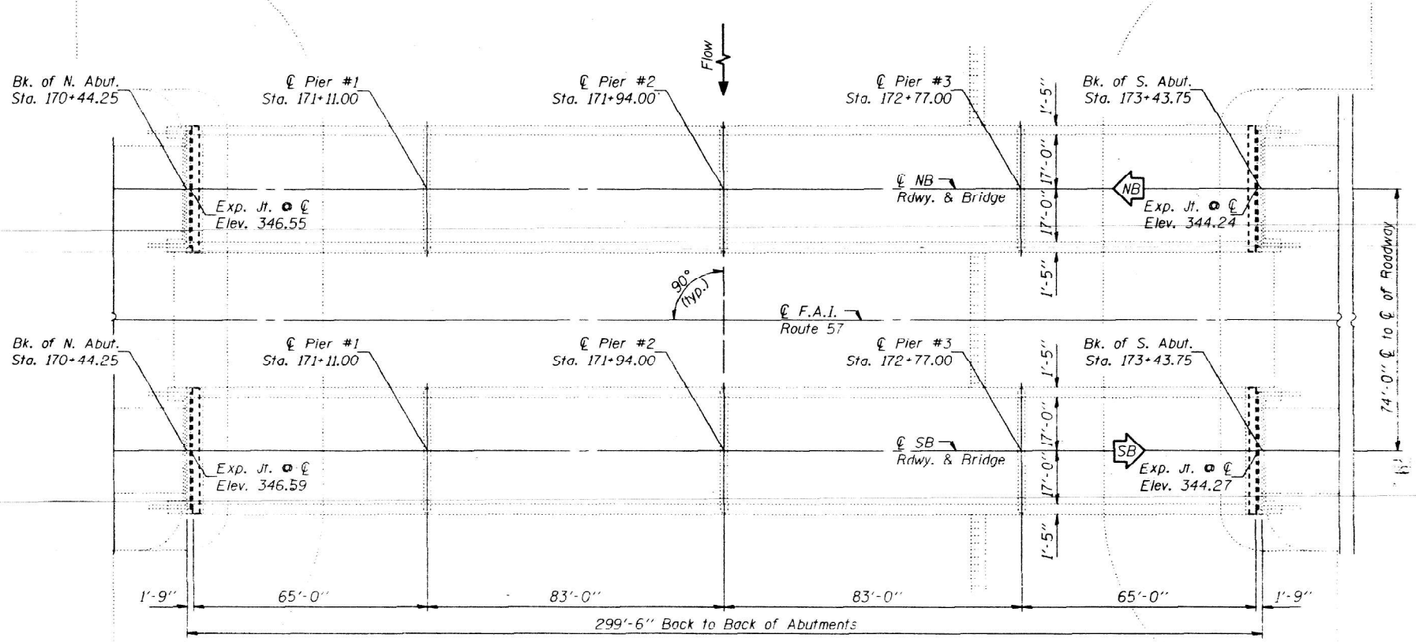

PLAN

GENERAL NOTES

Fasteners shall be high strength bolts. Bolts $\frac{3}{4}$"Φ, open holes $\frac{7}{8}$"Φ, unless otherwise noted.

The Inorganic Zinc-Silicate / Acrylic / Acrylic Paint System shall be used for shop and field painting of new structural steel except where otherwise noted. The color of the acrylic finish coat shall be Interstate Green, Munsell No. 7.5 G 4/8. See the Special Provisions.

Reinforcement bars shall conform to the requirements of AASHTO M-31, M-42 or M-53 Grade 60.

Plan dimensions and details relative to existing structure have been taken from existing plans and are subject to nominal construction variations. It shall be the Contractor's responsibility to verify such dimensions and details in the field and make necessary approved adjustments prior to construction or ordering of materials. Such variations shall not be cause for additional compensation for a change in the scope of the work, however, the Contractor will be paid for the quantity actually furnished at the unit price bid for the work.

Two $\frac{1}{8}$" adjusting shims, of the dimensions of the bottom bearing plate, shall be provided for each bearing in addition to all other plates or shims. For Type I Elastomeric Bearings, shims of the dimensions of the top plate shall be provided and placed as detailed.

It shall be the Contractor's responsibility to match the final top of deck elevations, after bearing replacement, with the existing top of deck elevations.

TOTAL BILL OF MATERIAL

ITEM	UNIT	SUPER	SUB	TOTAL
Elastomeric Bearing Assembly, Type I	Each	28		28
Elastomeric Bearing Assembly, Type II	Each	28		28
Structural Steel	Lbs.	15570		15570
Concrete Structures	Cu. Yd.		5.5	5.5
Reinforcement Bars, Epoxy Coated	Lbs.		1730	1730
Jack and Remove Existing Bearings	Each	70		70
Slopewall Removal	Sq. Yd.		44	44
Slopewall (6")	Sq. Yd.		28	28

LOADING HS20-44 & ALTERNATE

DESIGN SPECIFICATIONS

1992 AASHTO
1983 Seismic Retrofitting Guidelines for Highway Bridges (FHWA/RD-83/007)

DESIGN STRESSES

NEW CONSTRUCTION
f_c = 3,500 psi
f_y = 60,000 psi (reinforcement)
f_y = 36,000 psi (struct.) (M-270 Grade 36)

EXISTING STRUCTURE
f_c = 1,400 psi
f_s = 20,000 psi (reinforcement)
f_s = 18,000 psi (structural)
v_c = 75 psi (footing)

SEISMIC DATA
Seismic Performance Category = B
Acceleration Coefficient = .18
Site Coefficient = 1.5

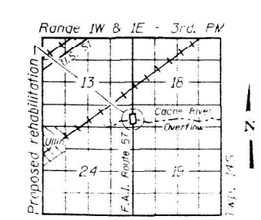

LOCATION SKETCH

GENERAL PLAN
F.A.I. ROUTE 57 OVER
CACHE RIVER OVERFLOW
F.A.I. ROUTE 57 - SEC. (77-1B-1)I-1
PULASKI COUNTY
STATION 171+94.00
S.N. 077-0007 (N.B.)
S.N. 077-0008 (S.B.)

DESIGNED	H. O. Lenfield
CHECKED	Anthony J. Lizzo
DRAWN	R. Doty
CHECKED	SDS AJV.

May 16 1994
EXAMINED Jorge L. Kaspar — ENGINEER OF BRIDGE DESIGN
PASSED Ralph E. Anderson — ENGINEER OF BRIDGES AND STRUCTURES

STATE OF ILLINOIS — 061-004521 — STRUCTURAL ENGINEER

ROUTE NO.	SECTION	COUNTY	TOTAL SHEETS	SHEET NO.
F.A.I. 57	*	PULASKI	24	12
FED. ROAD DIST. NO. 7	ILLINOIS	FED. AID PROJECT		

SHEET NO. 3
8 SHEETS

*77(1B,1B-1,1B-2)I-1

STATE OF ILLINOIS
DEPARTMENT OF TRANSPORTATION

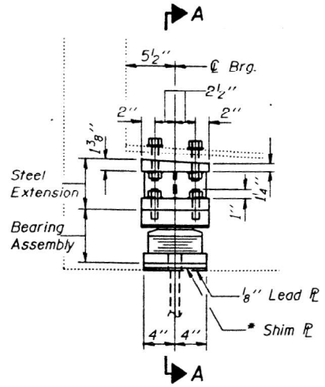

ELEVATION AT N. ABUT.

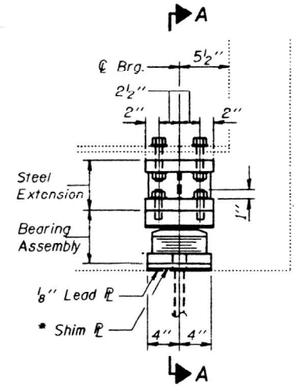

ELEVATION AT S. ABUT.

TYPE II TFE ELASTOMERIC EXP. BRG.

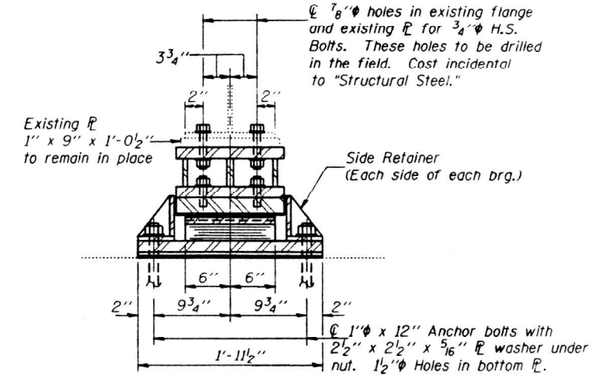

SECTION A-A

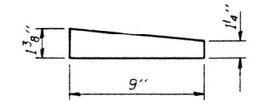

VIEW C-C
(Showing Tapered Top Plate)

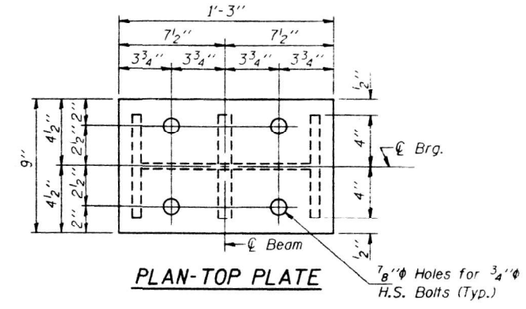

PLAN-TOP PLATE

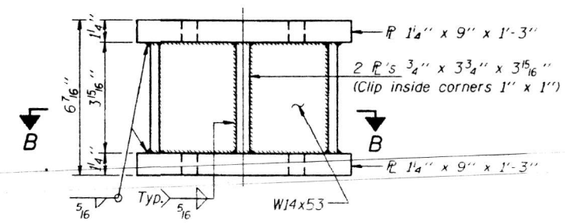

STEEL EXTENSION AT SOUTH ABUT.

Equivalent welded plates will be allowed in lieu of W14x53 section.

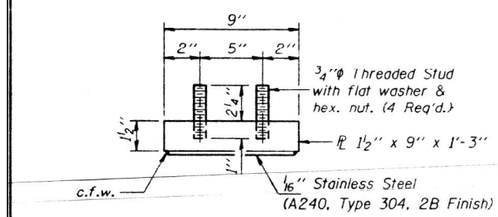

TOP BEARING ASSEMBLY

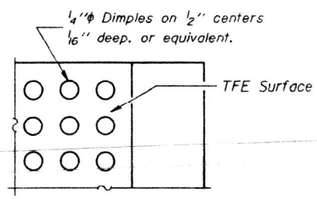

PLAN-TFE SURFACE

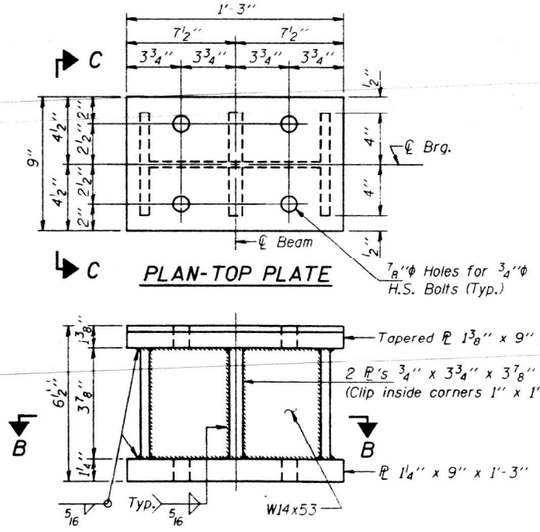

PLAN-TOP PLATE

STEEL EXTENSION AT NORTH ABUT.

Equivalent welded plates will be allowed in lieu of W14x53 section.

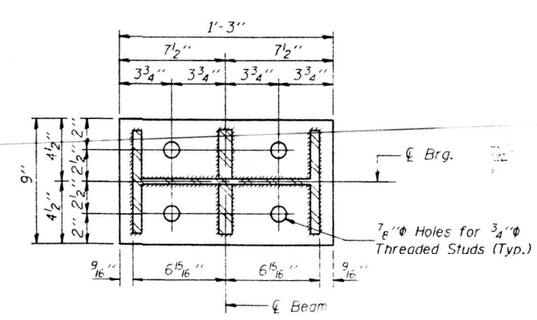

SECTION B-B

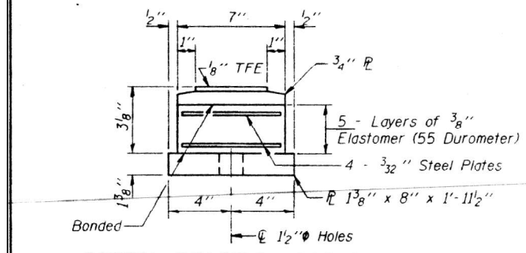

BOTTOM BEARING ASSEMBLY

* Shim ℙ ¼" x 8" x 1'-11½" (Beams #4 & #11 only)

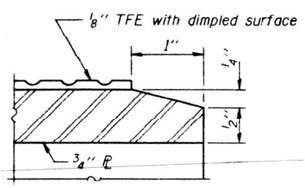

SECTION THRU TFE

Note: The ⅛" TFE sheet shall be bonded directly to the top steel plate with a two-component, medium viscosity epoxy resin, conforming to the requirements of the Federal Specification MMM-A-134, Type I. The bond agent shall be applied on the full area of the contact surfaces.

Bonding of ⅛" TFE sheet during vulcanizing process will be permitted provided the process and method of adjusting assembly height is approved by the Engineer.

Notes: For anchor bolt installation details see sheet #8 of 8.
See sheet #4 of 8 for Jack and Remove Existing Bearing Procedure.

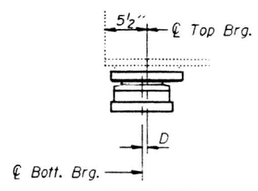

BELOW 50°F.
(Move bott. brg. away from fixed brg.)

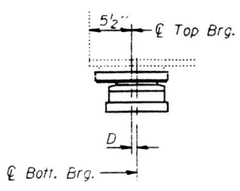

ABOVE 50°F.
(Move bott. brg. toward fixed brg.)

SETTING ANCHOR BOLTS AT EXP. BRG.

D=⅛" per each 100° of expansion for every 15° temp. change from the normal temp. of 50° F.

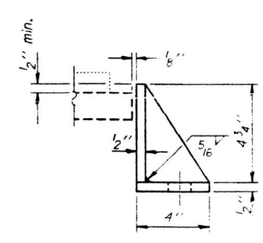

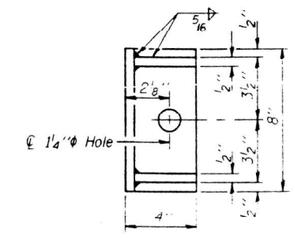

SIDE RETAINER

Equivalent rolled angle with stiffeners will be allowed in lieu of welded plates. Weight included with Structural Steel.

TWO STRUCTURES
BILL OF MATERIAL

Item	Unit	Total
Elastomeric Bearing Assembly, Type II	Each	28
Jack and Remove Existing Bearings	Each	28

BEARING DETAILS
F.A.I. RT. 57 SEC. (77-1B-1)I-1
PULASKI COUNTY
STA. 171+94.00

DESIGNED	[signature]		
CHECKED	[signature]		
DRAWN	R. Dötr		
CHECKED	SDS	A.X.V	

May 16 1994
EXAMINED [signature] ENGINEER OF BRIDGE DESIGN
PASSED [signature] ENGINEER OF BRIDGES AND STRUCTURES

Existing Structure: 4 span cont. wide flange beams on R.C. piers and abuts. 7" R.C. deck (bare). E. Bridge (N. Bound) is S.N. 077-0007. W. Bridge (S. Bound) is S.N. 077-0008. Contractor shall retrofit bridge railings with concrete parapets, patch deck, modify expansion joints, repair bearings, modify wingwalls, waterproof, and resurface.
Traffic shall be maintained at all times using Stage Construction.

F.A.I. 57	*	Union & Pulaski	106	87

SHEET NO. 1
SHEETS 7

* 91 (3HB - 1 , 3B , 3B - 1 , 4HB - 1 , 4B - 1 , 4B - 2 , 4HB - 2)) , 77 (1B , 1HB - 2 , 1VB , 1B - 1 , 1B - 2))

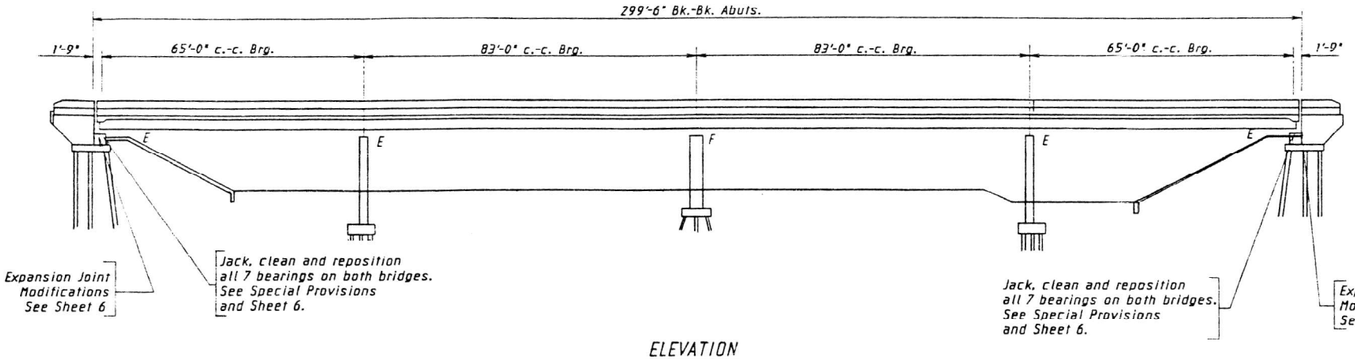

ELEVATION

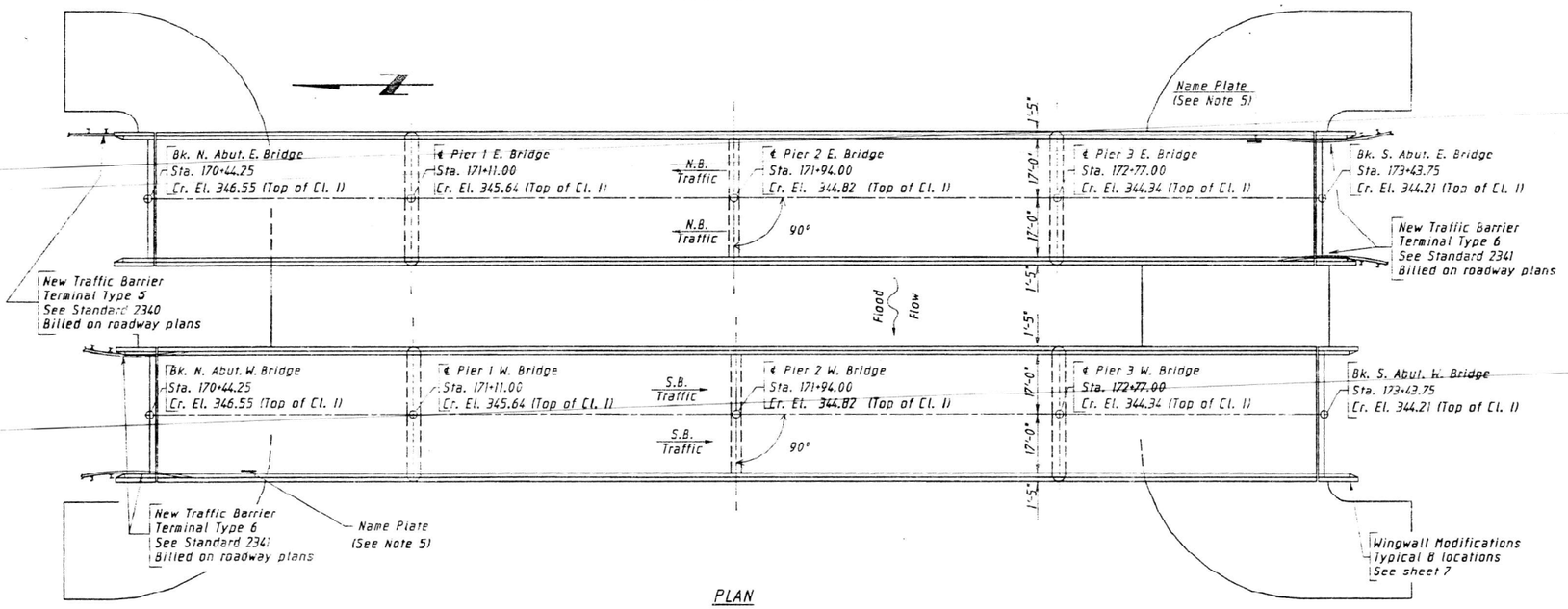

PLAN

GENERAL NOTES

1.) All new structural steel shall receive two shop coats of dull orange primer.

2.) Reinforcement bars shall conform to the requirements of AASHTO M-31, M-42 or M-53, Grade 60.

3.) Plan dimensions and details relative to existing structure have been taken from existing plans and are subject to nominal construction variations. It shall be the Contractor's responsibility to verify such dimensions and details in the field and make necessary approved adjustments prior to construction or ordering of materials. Such variations shall not be cause for additional compensation for a change in the scope of the work, however, the Contractor will be paid for the quantity actually furnished at the unit price bid for the work.

4.) Protective Coat shall not be applied to surfaces to which Waterproofing Membrane System is applied.

5.) Contractor shall remove, clean and reinstall existing name plate for each bridge on new parapet. Cost incidental.

6.) The existing bearings at the designated locations shall be cleaned by Method II. Areas cleaned by Method II shall receive one coat of dull orange primer and one coat of aluminum paint. Such bearings shall receive one final coat of aluminum paint.

TOTAL BILL OF MATERIAL - TWO BRIDGES

Item	Unit	Super.	Sub.	Total
Concrete Removal	Cu. Yd.	189.0	14.3	203.3
Reinforcement Bars (Epoxy Coated)	Lb.	47,600	2120	49,720
Class X Concrete	Cu. Yd.	247.6	19.8	267.4
Waterproofing Membrane System	Sq. Yd.	2263		2263
Bit. Conc. Surf. Course Mixture D Class I*	Tons	215		215
Bridge Handrail Removal**	L.F.	1188		1188
Floor Drains	Ea.	72		72
Structural Steel	Lb.	9605		9605
Protective Coat	Sq. Yd.	547		547
Deck Slab Repairs (Partial)	Sq. Yd.	1.7		1.7
Deck Slab Repair (Full Depth)	Sq. Yd.	4.0		4.0
Preformed Joint Seal (4")	L.F.	147		147
Jacking and Shoring Existing Girders**	Ea.		4	4

* Bk. to Bk. Abuts.
** See Special Provisions

DESIGN SPECS.: 1983 AASHTO Bridge Specs. & 1984 & 1985 Interims
Load Factor Design

DESIGN LOADING: HS 20-44

DESIGN STRESSES: f'_c 3,500 psi
f_y 60,000 psi (Reinf.)
f_y 36,000 (Str. Steel M-183)

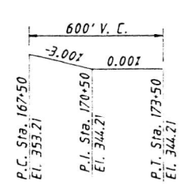

PROFILE FAI 57
(Top of Cl. I)

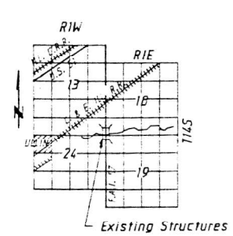

LOCATION MAP

Donald D. Bell
DONALD D. BELL
ILL. REG. S.E. NO. 4544
DATE: 5-28-86

STATE OF ILLINOIS DONALD D. BELL 081-004544 REGISTERED PROFESSIONAL ENGINEER

APPROVED FOR STRUCTURAL FACTORS ONLY
James T. Rayburn
ENGINEER OF BRIDGES

GENERAL PLAN AND ELEVATION
FAI ROUTE 57 OVER CACHE RIVER OVERFLOW
SECTION (77-1B-1)I
STRUCTURE #077-0007 & #077-0008
PULASKI COUNTY

REVISIONS: Bridge Office Review
ORIG. NO. Overflow.1
DATE May 1986
JOB NO. 1-0073-002.02

Randolph & Associates, Inc.
Peoria / Decatur

SURVEYED
DRAWN HMP
CHECKED DDB
DESIGNED DDB
REVIEWED DRE

ESCA CONSULTANTS, INC.

USER NAME = nhc	DESIGNED - ELH 09/24	REVISED -	
ESCA PROJECT NO.= 1423.04	CHECKED - ARD 10/24	REVISED -	
PLOT SCALE = 0:2 ':" / in.	DRAWN - IRC 09/24	REVISED -	
PLOT DATE = 2/3/2025	CHECKED - ELH 09/24	REVISED -	

STATE OF ILLINOIS
DEPARTMENT OF TRANSPORTATION

EXISTING BRIDGE PLANS - FOR INFORMATION ONLY
SN 077-0007 (NB) & SN 077-0008 (SB)
SHEET 30 OF 39 SHEETS

F.A.I. RTE.	SECTION	COUNTY	TOTAL SHEETS	SHEET NO.
57	D9 BRIDGE REPAIR 25-4	PULASKI	103	93

CONTRACT NO. 78A80
ILLINOIS FED. AID PROJECT

MODEL: Sheet
FILE NAME: Y:\IDOT\1423-04_78A80\CADD\SP SN 077-0007_0008\0770007-78A80-30-ExistingBridgePlans.dgn
2/3/2025 11:22:32 AM

SECTION	COUNTY	TOTAL SHEETS	SHEET NO.
F.A.I. 57 - *	Union & Pulaski	106	90

SHEET NO. 4
SHEETS 7

* 91 (3HB - 1 , 3B , 3B - 1 , 4HB - 1 , 4B - 1 , 4B - 2 , 4HB - 2)] , 77 (1B , 1HB - 2 , 1VB , 1B - 1 , 1B - 2)]

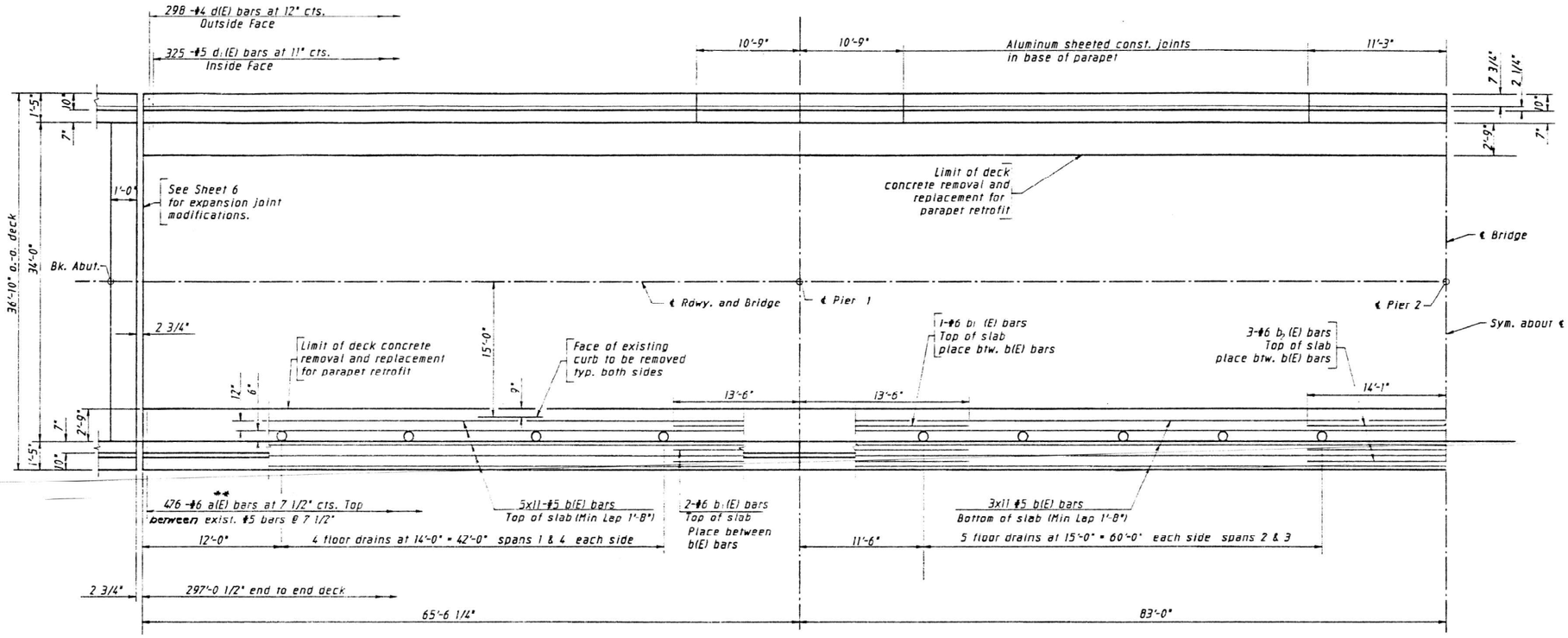

HALF PLAN

* Chipping hammers heavier than a nominal 15 pound class shall not be used for concrete removal in this area. This includes removing concrete around and under top reinforcing bars, and removing concrete at top flange of beams. (Typical each side)

** Do not lap a (E) bars with existing rebars.

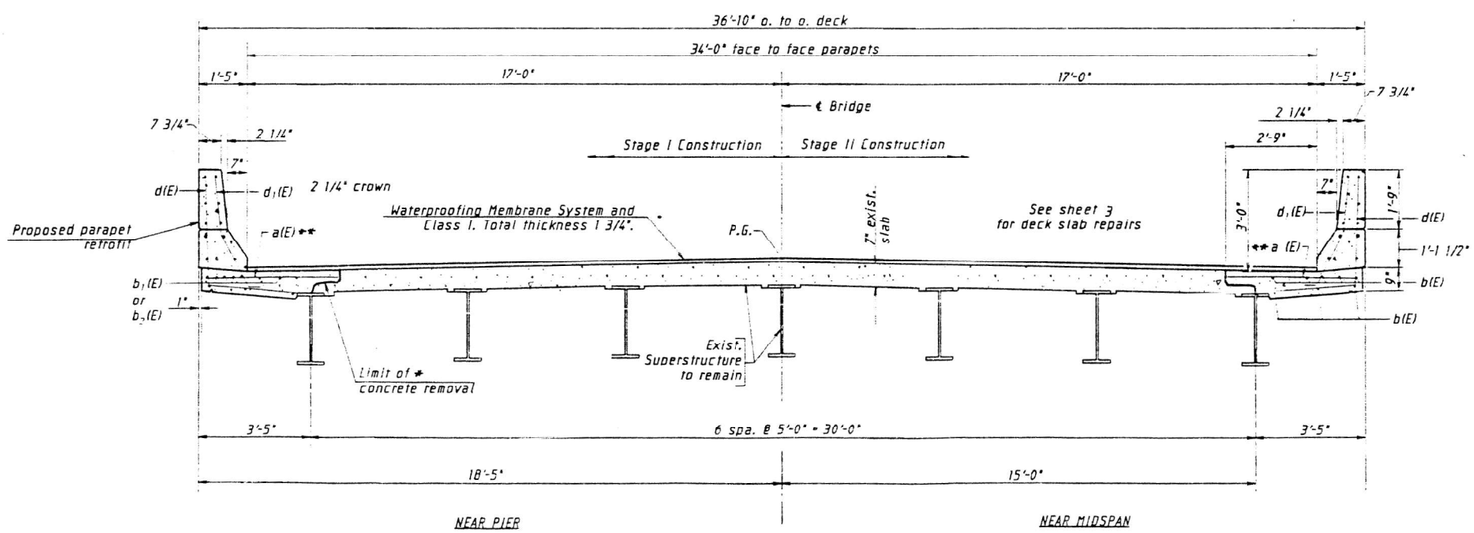

CROSS SECTION
looking in direction of traffic

NOTES

See sheet #5 for Bill of Material and Parapet Details.

Reinforcement bars designated (E) shall be epoxy coated.

Bars indicated thus 20x3-#5 etc. indicates 20 lines of bars with 3 lengths per line.

DECK PLAN AND CROSS SECTION
FAI ROUTE 57 OVER CACHE RIVER OVERFLOW
SECTION (77-1B-1)I
STRUCTURE #077-0007 & #077-0008
PULASKI COUNTY

REVISIONS	Bridge Office Review
DRG. NO.	OVERFLOW.4
DATE	May 1986
SUB NO.	1-0073-002.02

Randolph & Associates, Inc.
Peoria / Decatur

SURVEYED	
DRAWN	HMR
CHECKED	DDB
DESIGNED	DDB
CHECKED	DPE

ESCA CONSULTANTS, INC.

USER NAME = nhc	DESIGNED - ELH 09/24	REVISED -	
ESCA PROJECT NO.= 1423.04	CHECKED - ARD 10/24	REVISED -	
PLOT SCALE = 0:2 ':" / in.	DRAWN - IRC 09/24	REVISED -	
PLOT DATE = 2/3/2025	CHECKED - ELH 09/24	REVISED -	

STATE OF ILLINOIS
DEPARTMENT OF TRANSPORTATION

EXISTING BRIDGE PLANS - FOR INFORMATION ONLY
SN 077-0007 (NB) & SN 077-0008 (SB)

SHEET 31 OF 39 SHEETS

F.A.I. RTE.	SECTION	COUNTY	TOTAL SHEETS	SHEET NO.
57	D9 BRIDGE REPAIR 25-4	PULASKI	103	94

CONTRACT NO. 78A80
ILLINOIS FED. AID PROJECT

MODEL: Sheet
FILE NAME: Y:\IDOT\1423-04_78A80\CADD\SP SN 077-0007_0008\0770007-78A80-31-ExistingBridgePlans.dgn
2/3/2025 11:22:36 AM

F.A.I. RTE.	SECTION	COUNTY	TOTAL SHEETS	SHEET NO.
F.A.I. 57	*	Union & Pulaski	106	91

SHEET NO. 5
SHEETS 7

* 91 (3HB - 1 , 3B , 3B - 1 , 4HB - 1 , 4B - 1 , 4B - 2 , 4HB - 2) ; 77 (1B , 1HB - 2 , 1VB , 1B - 1 , 1B - 2)]

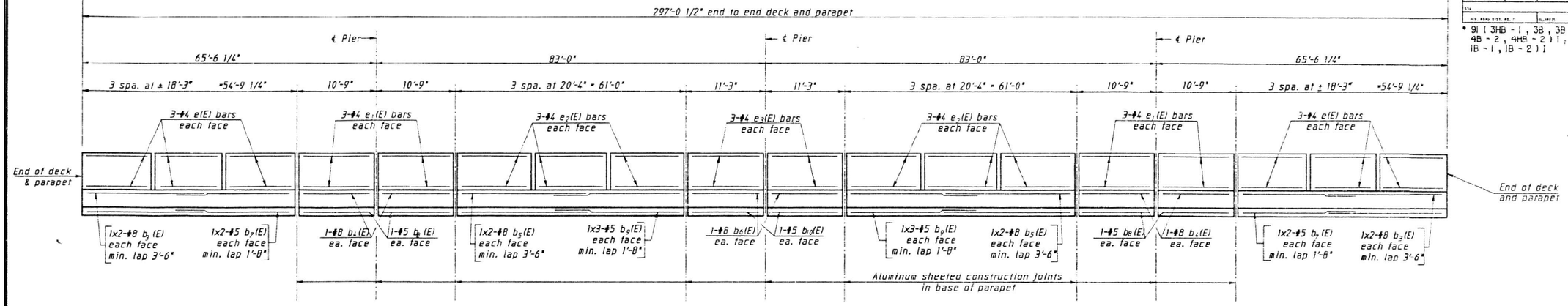

INSIDE ELEVATION OF PARAPET

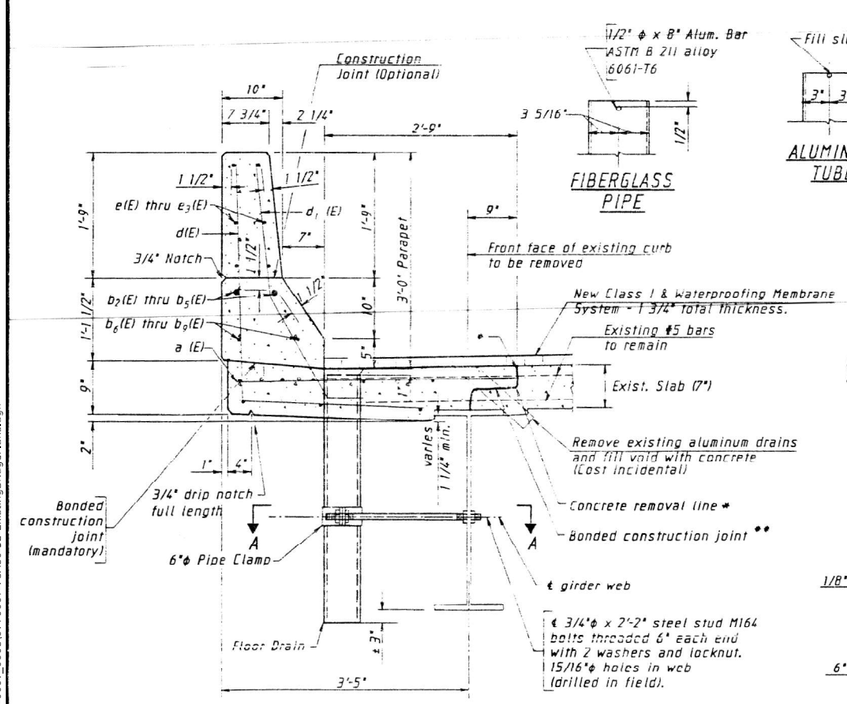

NOTE: Existing transverse reinf. extending into new concrete shall be cleaned and incorporated into new concrete.

** In accordance with Article 504.13(a)(2) of the Std. Specs.

* Saw cut 1" and remove concrete vertically See sheets 2 & 9 of 7

SECTION THRU PARAPET

See sheet 4 for spacing of floor drains

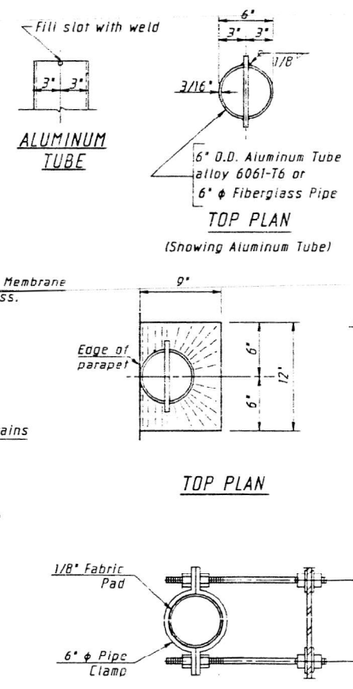

SECTION A-A

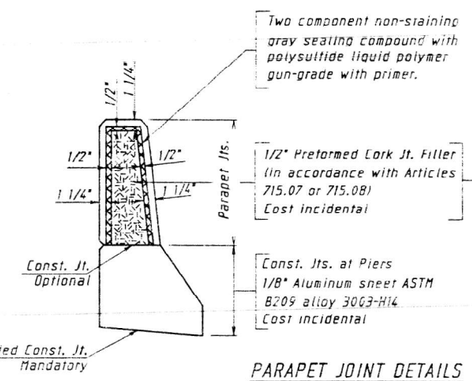

PARAPET JOINT DETAILS

NOTE:

Fiberglass pipe shall conform to ASTM D2996, with short-time rupture strength hoop tensile stress at 30,000 p.s.i. minimum. The surface of the Fiberglass pipe shall be free of bond inhibiting agents.

The exterior surfaces of the Floor Drains shall be painted with one coat of Aluminum paint. Painting of the Fiberglass Floor Drains will not be required when the exterior surfaces of the furnished drains are coated by the manufacturer with silver pigment or a pigment that matches the color of the existing Aluminum paint.

The exterior surfaces of the Aluminum tube shall be cleaned and given a washcoat pretreatment in accordance with Steel Structures Painting Council's Spec. SSPC-SP1 and SSPC-Paint 27 prior to painting.

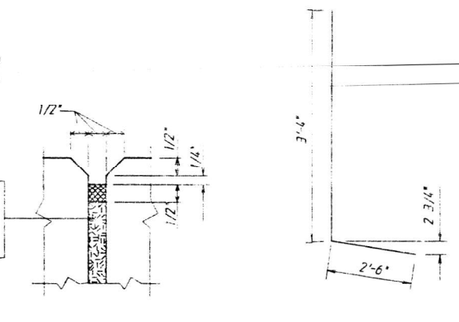

BAR d(E)

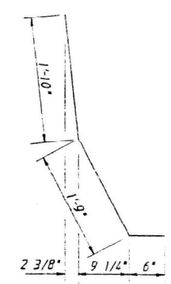

BAR d1(E)

PARAPET
BILL OF MATERIAL - 2 BRIDGES

Bar	No.	Size	Length	Shape
a(E)	1904	#6	2'-11"	
b(E)	352	#5	28'-6"	
b1(E)	24	#6	27'-0"	
b2(E)	12	#6	28'-2"	
b3(E)	32	#8	29'-0"	
b4(E)	32	#8	10'-5"	
b5(E)	32	#8	32'-1"	
b6(E)	16	#8	10'-11"	
b7(E)	32	#5	28'-1"	
b8(E)	32	#5	10'-5"	
b9(E)	48	#5	31'-2"	
b10(E)	16	#5	10'-11"	
d(E)	1192	#4	5'-10"	
d1(E)	1300	#5	4'-1"	
e(E)	144	#4	17'-11"	
e1(E)	96	#4	10'-5"	
e2(E)	144	#4	20'-0"	
e3(E)	48	#4	10'-11"	
Reinforcement Bars (Epoxy Coated)			Lbs.	47,600
Class X Concrete			Cu. Yd.	235.9
Concrete Removal			Cu. Yd.	177.3
Bridge Handrail Removal			L.F.	1186
Floor Drains			Ea.	72

Reinforcement bars designated (E) shall be epoxy coated.

PARAPET DETAILS
FAI ROUTE 57 OVER CACHE RIVER OVERFLOW
SECTION (77-1B-1)1
STRUCTURE #077-0007 & #077-0008
PULASKI COUNTY

REVISIONS	Bridge Office Review
ORIG. NO.	OVERFLOW.5
DATE	May 1986
FED. ROAD DIST. NO.	1-0073-002.02

Randolph & Associates, Inc.
Peoria / Decatur

SURVEYED	
DRAWN	HMR
CHECKED	DDB
DESIGNED	DDB
CHECKED	DPE

ESCA CONSULTANTS, INC.

USER NAME = nhc	DESIGNED - ELH 09/24	REVISED -	STATE OF ILLINOIS DEPARTMENT OF TRANSPORTATION	EXISTING BRIDGE PLANS - FOR INFORMATION ONLY SN 077-0007 (NB) & SN 077-0008 (SB)	
ESCA PROJECT NO.= 1423.04	CHECKED - ARD 10/24	REVISED -			
PLOT SCALE = 0:2 ':" / in.	DRAWN - IRC 09/24	REVISED -			
PLOT DATE = 2/3/2025	CHECKED - ELH 09/24	REVISED -		SHEET 32 OF 39 SHEETS	

F.A.I. RTE.	SECTION	COUNTY	TOTAL SHEETS	SHEET NO.
57	D9 BRIDGE REPAIR 25-4	PULASKI	103	95
		CONTRACT NO. 78A80		
		ILLINOIS FED. AID PROJECT		

MODEL: Sheet
FILE NAME: Y:\IDOT\1423-04_78A80\CADD\SP SN 077-0007_0008\0770007-78A80-32-ExistingBridgePlans.dgn
2/3/2025 11:22:40 AM

BDR. FAI.	57	*	Union & Pulaski	106	93

SHEET NO. 7
SHEETS 7

* 9! (3HB - 1 , 3B , 3B - 1 , 4HB - 1 , 4B - 1 , 4B - 2 , 4HB - 2)] , 77 (1B , 1HB - 2 , 1VB , 1B - 1 , 1B - 2)]

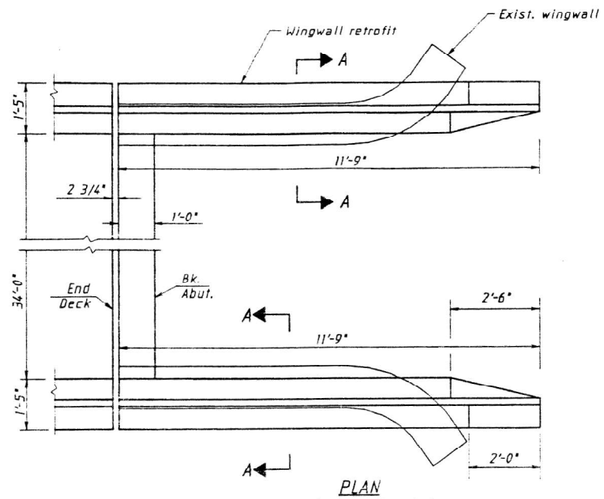

PLAN
typical 8 wingwalls - 4 abuts.

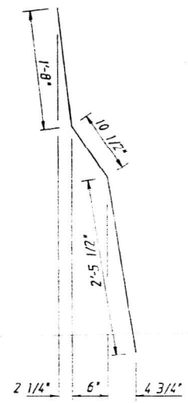

BAR v1(E)

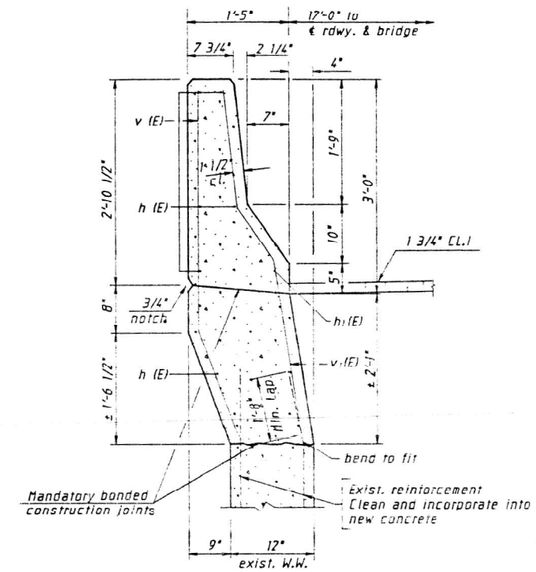

SECTION A-A

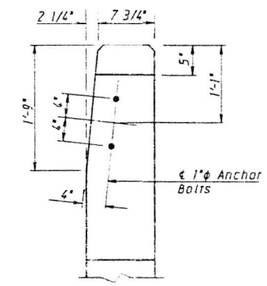

VIEW B-B

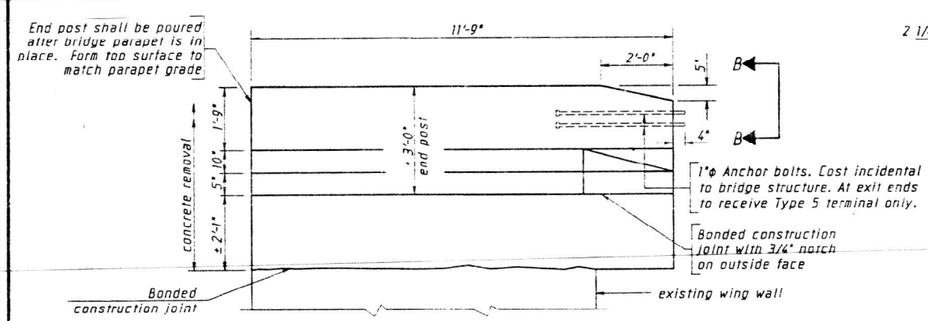

INSIDE ELEVATION WING WALL

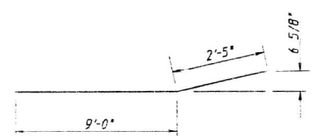

BAR h1(E)

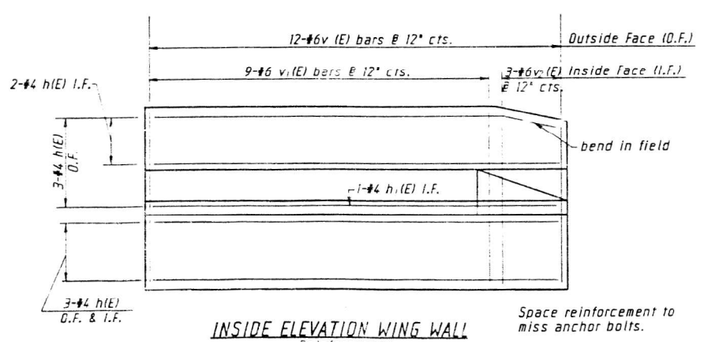

INSIDE ELEVATION WING WALL
Reinforcement

Space reinforcement to miss anchor bolts.

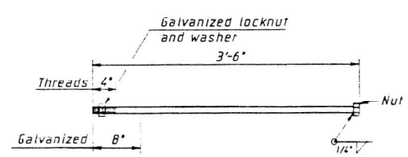

1"ϕ ANCHOR BOLTS

BAR v2(E)

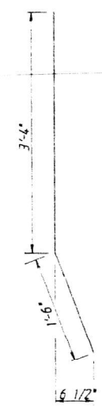

BAR v(E)

BILL OF MATERIAL - 8 WING WALLS

bar	No.	Size	Length	Shape
h(E)	80	#4	11'-5"	
h1(E)	8	#4	11'-5"	
v(E)	96	#6	4'-10"	
v1(E)	72	#6	5'-0"	
v2(E)	24	#6	4'-3"	

Reinforcement Bars (Epoxy Coated)	Lbs.	2120
Class X Concrete	Cu. Yd.	19.8
Concrete Removal	Cu. Yd.	14.7

Reinforcement bars designated (E) shall be epoxy coated.

WING WALL MODIFICATIONS
FAI ROUTE 57 OVER CACHE RIVER OVERFLOW
SECTION (77-1B-1)]
STRUCTURE #077-0007 & #077-0008
PULASKI COUNTY

REVISIONS	Bridge Office Review
DGN. NO.	OVERFLOW.7
DATE	May 1986
JOB NO.	1-0073-002.07

Randolph & Associates, Inc.
Peoria / Decatur

SURVEYED	
DRAWN	HMP
CHECKED	DDB
DESIGNED	DDB
CHECKED	DRE

MODEL: Sheet
FILE NAME: Y:\IDOT\1423-04_78A80\CADD\SP SN 077-0007_0008\0770007-78A80-33-ExistingBridgePlans.dgn

ESCA CONSULTANTS, INC.

USER NAME = nhc	DESIGNED - ELH	09/24	REVISED -		
ESCA PROJECT NO.= 1423.04	CHECKED - ARD	10/24	REVISED -		
PLOT SCALE = 0:2 ':" / in.	DRAWN - IRC	09/24	REVISED -		
PLOT DATE = 2/3/2025	CHECKED - ELH	09/24	REVISED -		

STATE OF ILLINOIS
DEPARTMENT OF TRANSPORTATION

EXISTING BRIDGE PLANS - FOR INFORMATION ONLY
SN 077-0007 (NB) & SN 077-0008 (SB)

SHEET 33 OF 39 SHEETS

F.A.I. RTE.	SECTION	COUNTY	TOTAL SHEETS	SHEET NO.
57	D9 BRIDGE REPAIR 25-4	PULASKI	103	96

CONTRACT NO. 78A80
ILLINOIS FED. AID PROJECT

2/3/2025 11:22:44 AM

B.M. 542 W in Root 18" Gum 220' Rt.
Sta. 173+32 Elev. 329.05
Existing Structure - None

STATE OF ILLINOIS
DEPARTMENT OF PUBLIC WORKS & BUILDINGS
DIVISION OF HIGHWAYS

ROUTE NO.	SECTION	COUNTY	TOTAL SHEETS	SHEET NO.
F.A.I. 57	77-18-1	Pulaski	22	6
FED. ROAD DIST. NO. 7	ILLINOIS	FED. AID PROJECT I-57-1(52)18		

SHEET NO. 1
10 SHEETS

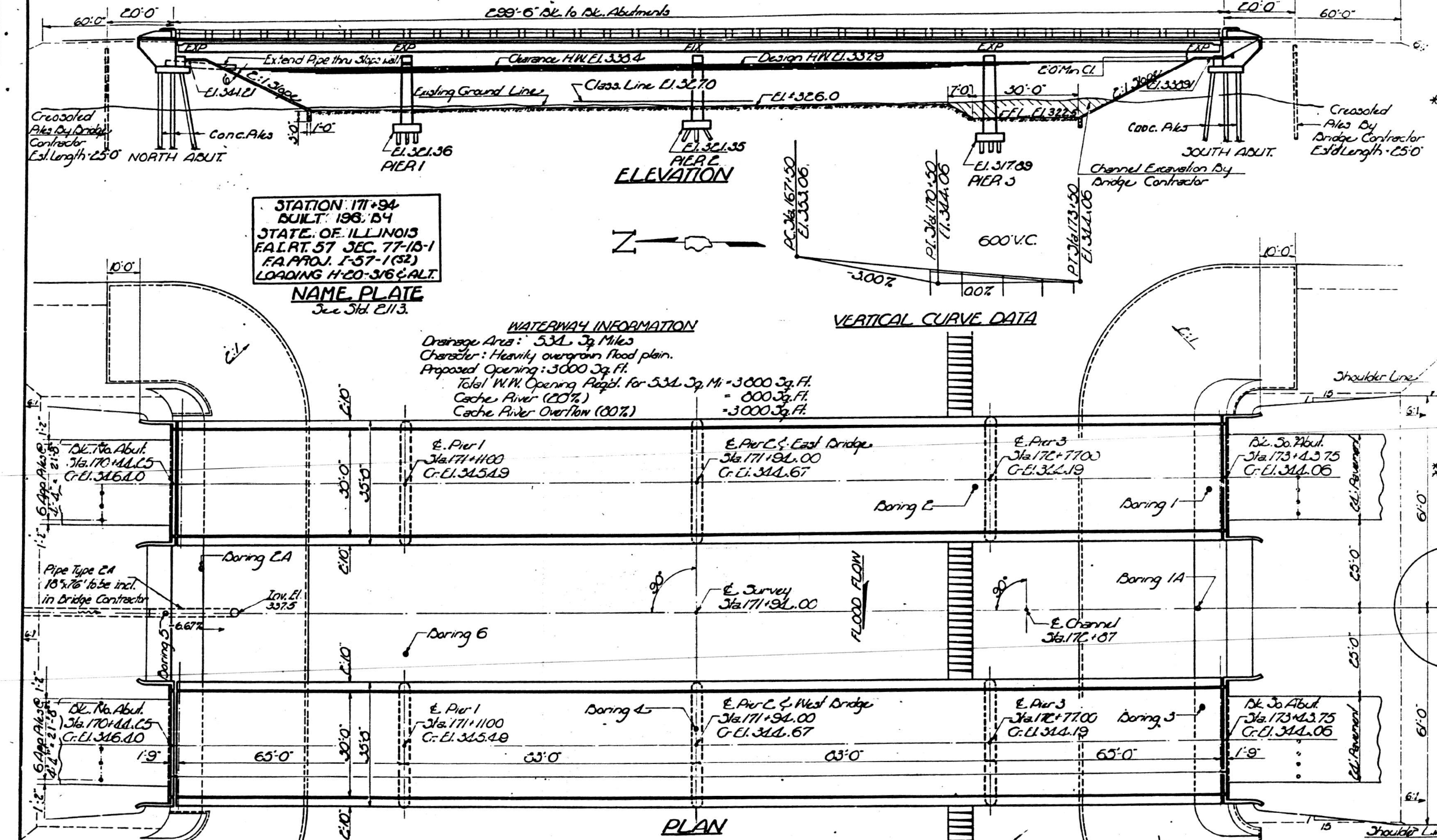

STATION 171+94
BUILT 196_ BY
STATE OF ILLINOIS
F.A.I. RT. 57 SEC. 77-18-1
F.A. PROJ. I-57-1(52)
LOADING H-20-316 & ALT.

NAME PLATE

See Std. 2113.

WATERWAY INFORMATION

Drainage Area: 534 Sq. Miles
Character: Heavily overgrown flood plain.
Proposed Opening: 3000 Sq. Ft.
Total W.W. Opening Reqd. for 534 Sq. Mi. - 3800 Sq. Ft.
Cache River (20%) = 800 Sq. Ft.
Cache River Overflow (80%) = 3000 Sq. Ft.

VERTICAL CURVE DATA

TOTAL BILL OF MATERIALS (SEC. B)

	Item	Unit	Sub.	Super	Total
	Channel Excavation	Cu. Yd.	2,557		2,557
*	Class B Exc. Struct.	Cu. Yd.	578		578
	Class A Concrete.	Cu. Yd.	512.6		512.6
	Class X Concrete.	Cu. Yd.	154.6	586.2	740.8
	Erecting & Furnishing Struct. Steel	Pound		706960	706960
	F. & E. Metal Handrail	Lin. Ft.		1190	1190
	Reinforcement Bars	Pound	23,960	101,460	125,420
	Fur. Creo. Pile 201-30	Lin. Ft.	600		600
	Timber Test Pile	Each	2		2
	Driv. Timber Pile	Lin. Ft.	5950		5950
	Driv. Conc. Piles	Lin. Ft.	1530		1530
	Fur. Conc. Piles	Lin. Ft.	1530		1530
	Test Pile Concrete	Each	2		2
	Name Plates	Each		2	2
	Slope Wall	Sq. Yd.	1350		1350
	~~Furn Untreated Piles~~	~~Lin. Ft.~~	~~5350~~		~~5350~~
	Pipe Cul. - Type 24-18	Lin. Ft.		76	76
	Protective Coat	Sq. Yd.		2500	2500
**	Bridge Seat Sealant	L. Sum			1

* Includes excavation for slope wall
** Abutments only

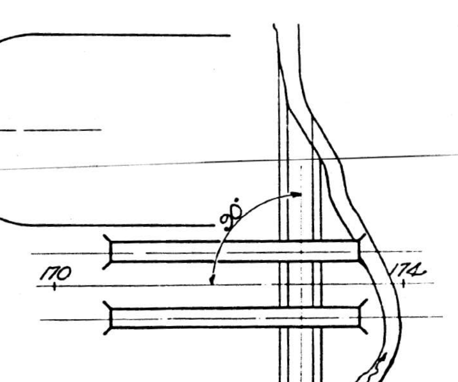

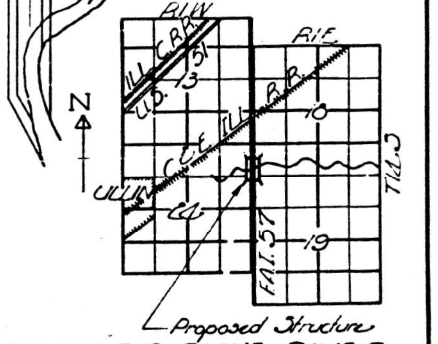

GENERAL NOTES

Class X Concrete shall be used throughout except

Class A Concrete shall be used in piers.
Handrail Concrete shall be used in handrails.
The concrete floor slab shall be finished in accordance with Article 51.19 of the Standard Specifications.
Slopewall shall be reinforced with welded wire fabric 6"x6" mesh, #4 wires, weighing 58# per 100 sq. ft.
Layout of slope walls may be varied to suit ground conditions in the field, as directed by the Engineer.
Rivets 3/4" ɸ, Open holes 13/16" ɸ, unless noted.
All structural Steel shall conform to A.S.T.M. Spec. A-36.
Railings shall be adjusted to true alignment after curbs have been poured.
All bolsters, rockers, bearing plates, lead plates, pintles and anchor bolts shall be fabricated and set in accordance with Article 51.15 of the Standard Specifications and are included in quantity of Structural Steel. Est'd. Wt. 10,000.#

Anchor bolts shall be set before riveting diaphragms over supports.
All steel handrail posts shall be vertical.
Expansion guards shall be fabricated and erected in accordance with Article 51.13(d) of the Standard Specifications.
Expansion guards are included in quantity of Structural Steel. Est'd. Wt. 3430.#
Except as otherwise provided, all structural steel shall receive one shop coat of red lead paint and two field coats of aluminum paint. See Articles 56.1 to 56.5 inclusive of the Standard Specifications.
All paint shall be furnished and applied by the Contractor.
The Contractor shall drive 2 Concrete Test Piles in permanent locations, one at North Abut. of East Bridge and one at South Abut. of West Bridge; and 2 Timber Test Piles in permanent locations, one at Pier 2 of East Bridge, and one at Pier 3 of West Bridge, as directed by the Engineer before ordering or casting the remainder of piles.
Class X Concrete in end posts must be free of chert, flint, limonite, lignite and soft sandstone.

Piles in abuts shall be driven in holes precored through the embankment to the natural ground line in accordance with Art. 60.9(c) of the Std. Specs.

DESIGN STRESSES

fc - 1400 p.s.i. Super & Sub.
vc - 75 p.s.i. Footings
fs - 20,000 p.s.i. Reinf.
fs - 10,000 p.s.i. Struct.
n - 10

LOADING H20-S16-44 & ALTERNATE

RELIEF OVERFLOW FOR CACHE RIVER
GENERAL PLAN & ELEVATION
PROJECT I-57-1(52)18
F.A.I. RT. 57 ~ SEC. 77-18-1
PULASKI COUNTY
STA. 171+94

DESIGNED	C. Lawson Corlew
CHECKED	[illegible]
DRAWN	Brown W. L. Jacobs
CHECKED	[illegible]

Oct 21 1960
EXAMINED W. E. Baumann
ENGINEER OF BRIDGES AND TRAFFIC STRUCTURES
PASSED E. E. Lineart
ENGINEER OF DESIGN
APPROVED R. R. Bartelsmeyer
CHIEF HIGHWAY ENGINEER

Revised 8/24/62 In TOTAL BILL OF MATERIAL (SEC. B) add 2500 Sq. Yd. Protective Coat, removed note for A-373 Steel in GENERAL NOTES. R.G.

Revised 12-5-60 Added Pipe Culvert Type 24-18" in Bill of Material. Quantity of Embankment changed from 19,300 to 25,800 Cu. Yds. C.L.C.
Revised 1-2-61 In ELEVATION & PLAN Embankments according with the new policy. Quantity of Embankment at N. Abut. chgd. from 9,180 to [illegible] Cu. Yds., at S. Abut. chgd. from 6,700 to 11,022 Cu. Yds. In Total Bill of M. quantity of Channel Exc. chgd. from 2,500 to 2,557 Cu. Yds., Embankment chgd. from 15,880 to 28,822 Cu. Yds. and Reinf. Bars chgd. from 95,700 (Super) to 96,160 & from 119,940 [illegible] to 120,320# R.A.Z.
Revised 3/28/62 In Total Bill of Mat. quantity of Reinf. Bars changed [illegible]
Revised 4/18/63 Added note for Struct. Steel [illegible]
Revis. 9/6/[illegible] Added Bridge Seat Sealant [illegible]

ESCA CONSULTANTS, INC.

USER NAME = nhc	DESIGNED - ELH 09/24	REVISED -	
ESCA PROJECT NO.= 1423.04	CHECKED - ARD 10/24	REVISED -	
PLOT SCALE = 0:2 ":" / in.	DRAWN - IRC 09/24	REVISED -	
PLOT DATE = 2/3/2025	CHECKED - ELH 09/24	REVISED -	

STATE OF ILLINOIS
DEPARTMENT OF TRANSPORTATION

EXISTING BRIDGE PLANS - FOR INFORMATION ONLY
SN 077-0007 (NB) & SN 077-0008 (SB)
SHEET 34 OF 39 SHEETS

F.A.I. RTE.	SECTION	COUNTY	TOTAL SHEETS	SHEET NO.
57	D9 BRIDGE REPAIR 25-4	PULASKI	103	97
		CONTRACT NO. 78A80		
	ILLINOIS	FED. AID PROJECT		

MODEL: Sheet
FILE NAME: Y:\IDOT\1423-04_78A80\CADD\SP SN 077-0007_0008\0770007-78A80-34-ExistingBridgePlans.dgn
2/3/2025 11:22:48 AM

STATE OF ILLINOIS
DEPARTMENT OF PUBLIC WORKS & BUILDINGS
DIVISION OF HIGHWAYS

ROUTE NO	SECTION	COUNTY	TOTAL SHEETS	SHEET NO
F.A.I. 57	77-1B-1	Pulaski	20	8
FED. ROAD DIST. NO. 7		ILLINOIS	FED. AID PROJECT	

SHEET NO 3
10 SHEETS

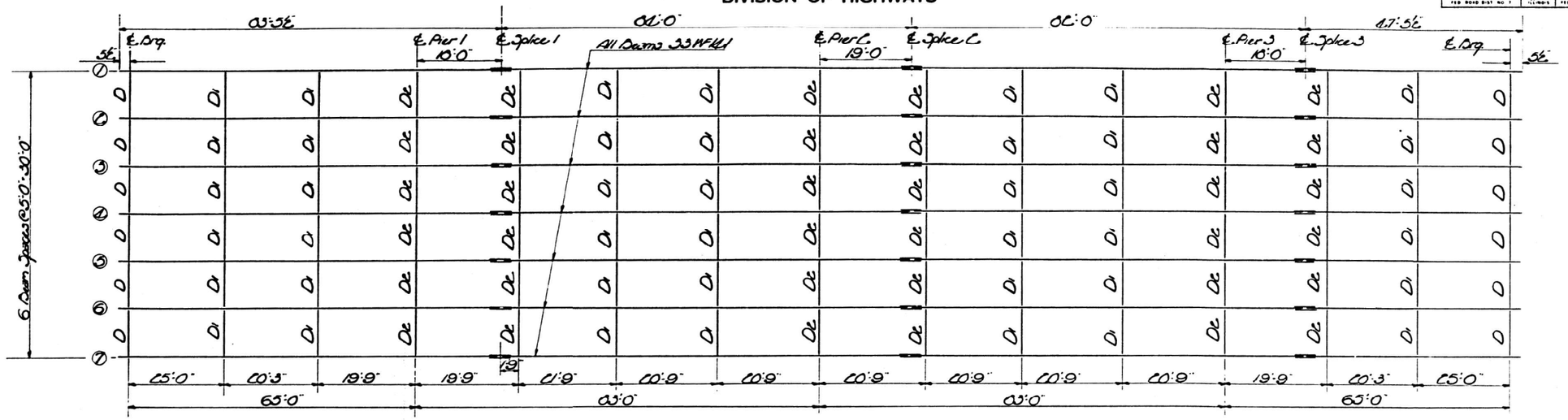

STRUCTURAL STEEL LAYOUT
(Each Bridge)

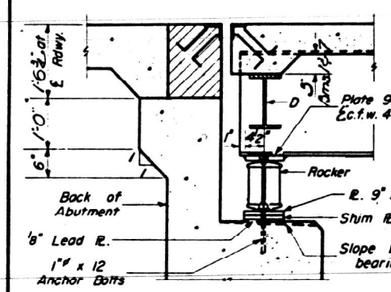

SECTION AT ABUTMENT

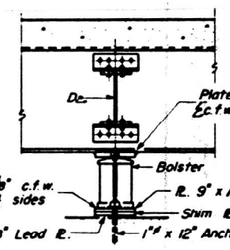

PIER 2

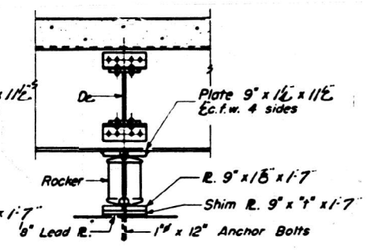

PIER 1 & 3

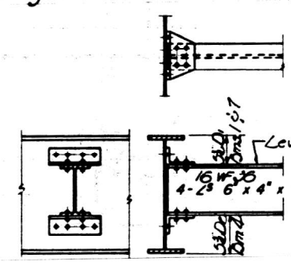

DIAPHRAGM D1 & D2

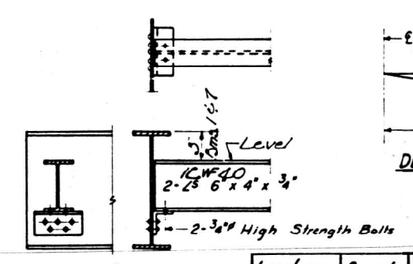

DIAPHRAGM D

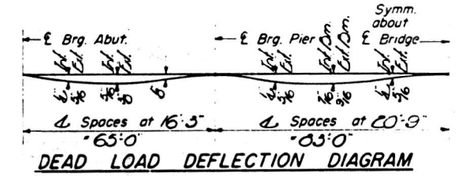

DEAD LOAD DEFLECTION DIAGRAM

(EACH BRIDGE)
ELEVATION TOP OF BEAMS

Location	Beam 1	Beam 2	Beam 3	Beam 4	Beam 5	Beam 6	Beam 7
℄ Brg. N. Abut.	315.62	315.72	315.79	315.81	315.79	315.72	315.62
℄ Pier 1	311.70	311.80	311.86	311.88	311.86	311.80	311.70
℄ Splice 1	311.11	311.51	311.61	311.63	311.61	311.51	311.11
℄ Pier 2	313.00	313.90	314.01	314.06	314.01	313.90	313.00
℄ Splice 2	313.71	313.81	313.90	313.90	313.90	313.81	313.71
℄ Pier 3	313.40	313.50	313.57	313.59	313.57	313.50	313.40
℄ Splice 3	313.32	313.42	313.42	313.50	313.42	313.42	313.32
℄ Brg. S. Abut.	313.31	313.41	313.48	313.50	313.48	313.41	313.31

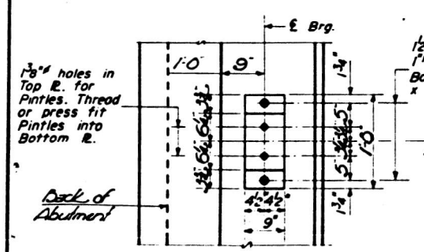

PLAN

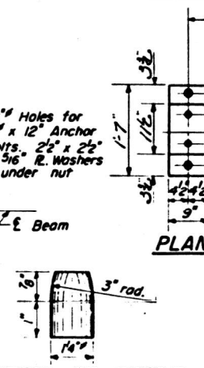

DETAIL OF PINTLE

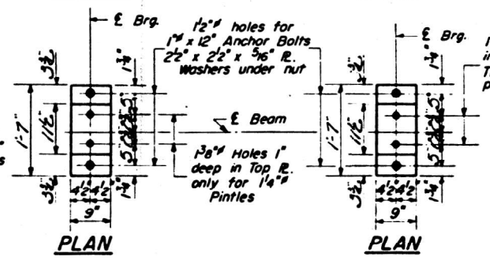

PLAN

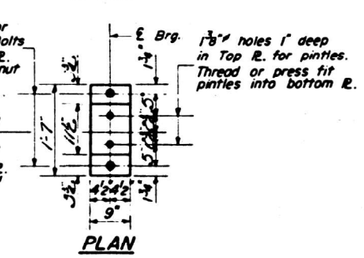

PLAN

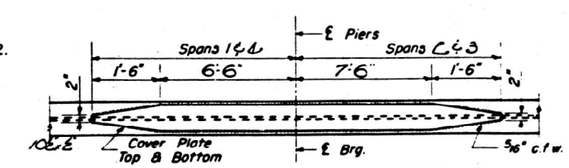

DETAIL OF COVER PLATES

(EACH BRIDGE)
TABLE OF "t" DIMENSIONS

Location	Dm 1	Dm 2	Dm 3	Dm 4	Dm 5	Dm 6	Dm 7
℄ Brgs. Abts.	—	—	—	t	—	—	—
℄ Pier 1 & 3	—	—	—	t	—	—	—
℄ Pier 2	—	—	—	t	—	—	—

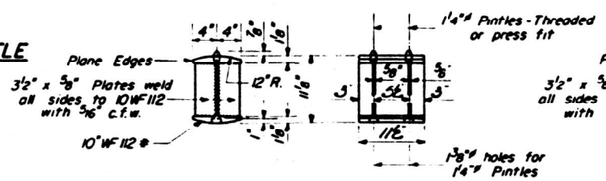

DETAIL OF BEARING AT PIER 1 & 3

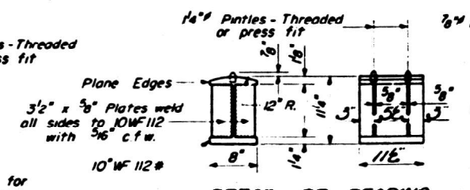

DETAIL OF BEARING AT PIER 2

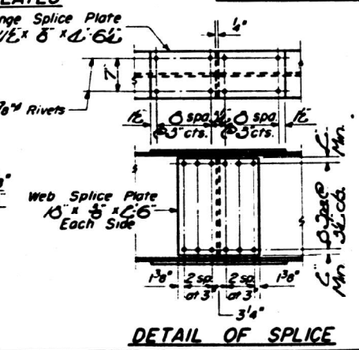

DETAIL OF SPLICE

DESIGNED C. James Carlson
CHECKED D. Oakwell
DRAWN W.L. Jacobs, W.A. Sausaman
CHECKED

OCT 21 1966
EXAMINED W.E. Baumann
PASSED E.L. Heck
APPROVED E.L. Bartelsmeyer

I-2 Re-drawn 8-18-59

Revised 8/24/62 in DIAPHRAGM D detail changed connection from 2 5/8" bolts to 2 3/4" high strength bolts

EAST & WEST BRIDGES
STRUCTURAL STEEL
F.A.I. RT. 57 ~ SEC. 77-1B-1
PULASKI COUNTY
STA. 171+94

Revised 8/24/62 in DIAPHRAGM D detail changed connection from 2 5/8" bolts to 2 3/4" high strength bolts

STATE OF ILLINOIS
DEPARTMENT OF PUBLIC WORKS & BUILDINGS
DIVISION OF HIGHWAYS

1.57	77-18-1	Pulaski	22	7	10

SHEET NO. 2

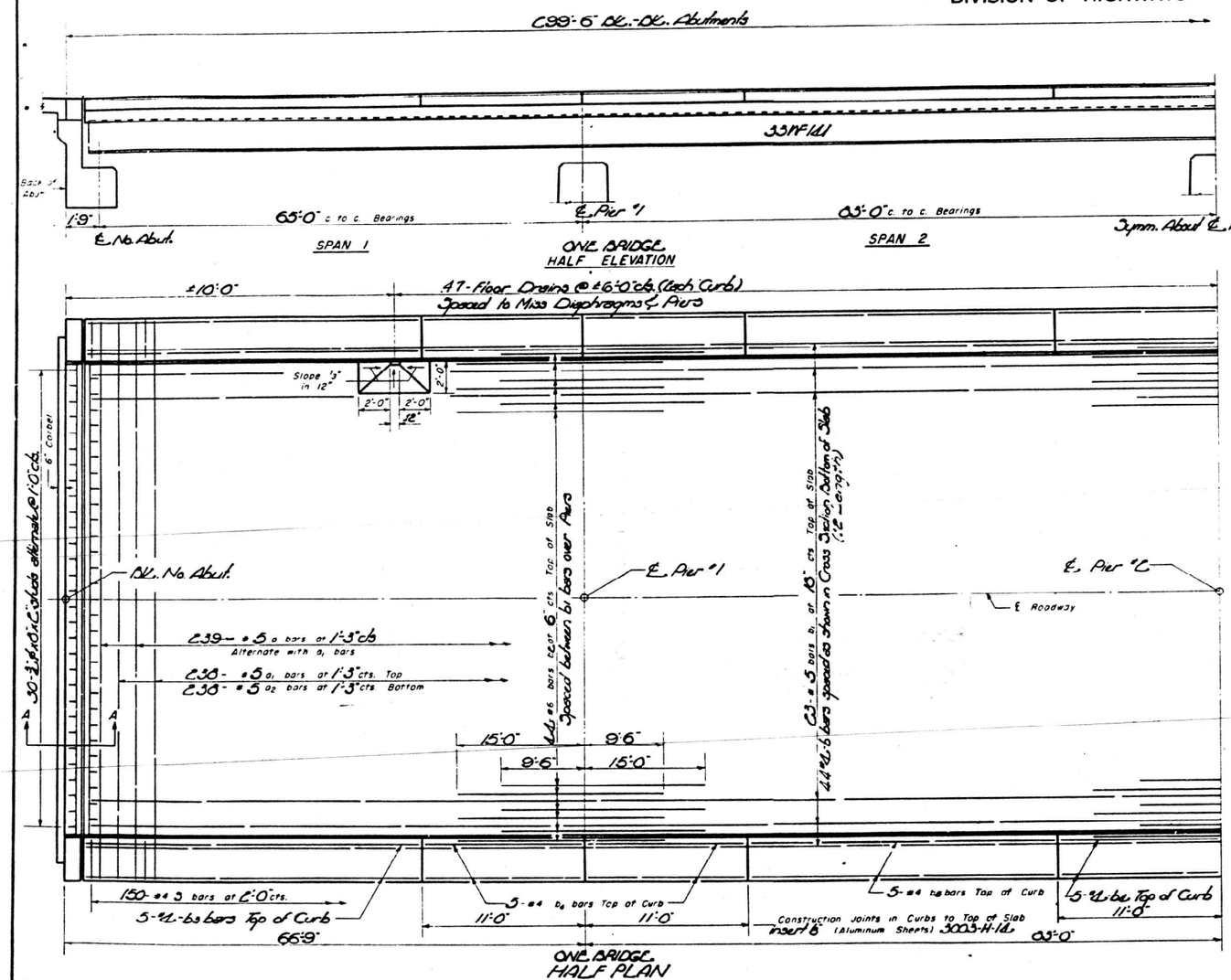

ONE BRIDGE
HALF PLAN

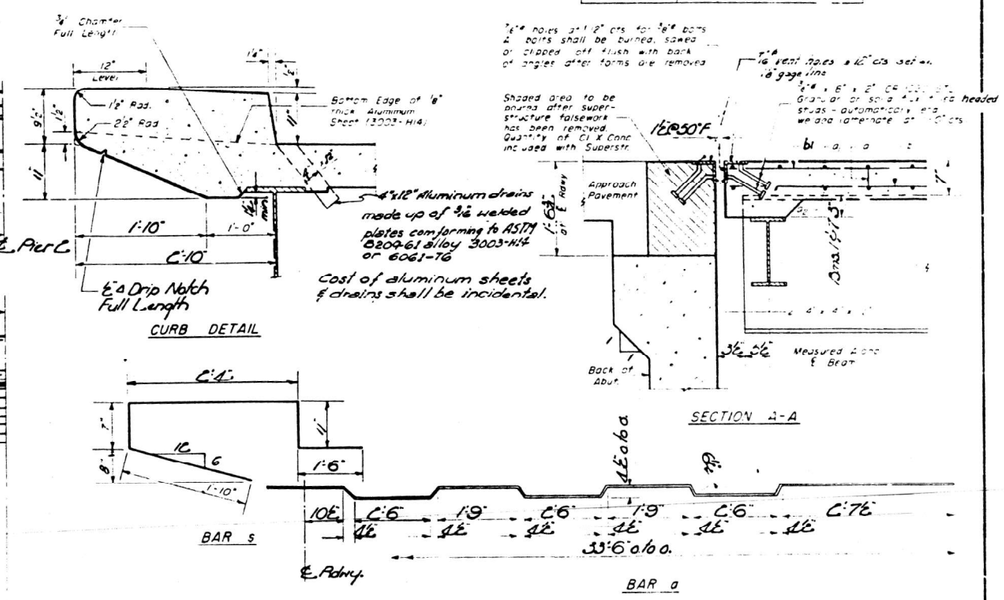

ONE BRIDGE
BILL OF MATERIAL

Bar	No.	Size	Length	Shape
a	239	#5	33'-6"	
a1	238	#5	33'-6"	
a2	238	#5	32'-9"	
b	588	#4	67'-6"	
b1	230	#5	30'-3"	
b2	132	#6	116'-6"	
b3	40	#4	67'-6"	
b4	60	#4	10'-9"	
b5	60	#4	10'-9"	
b6	300	#4	7'-2"	
Class A Concrete			Cu. Yd.	290.8
Reinforcement Bars			Lb.	22,540
* Structural Steel			Lb.	35,400
Name Plate			Ea.	One

* Weight of Bolsters, Rockers, Bearing Plates, Lead Plates, and Anchor Bolts included in Structural Steel. Est. Weight: 9400#

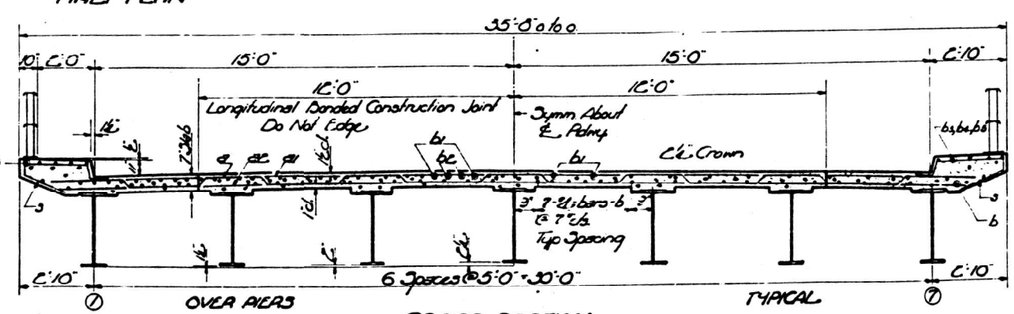

DESIGNED	C. Lawrence Carlson		
CHECKED	R. Dubowik		
DRAWN	W.L. Jacobs / W. A. Sausaman		
CHECKED			

OCT 21 1960

EXAMINED W.E. Baumann
PASSED
APPROVED R.R. Bartelsmeyer

EAST & WEST BRIDGES
SUPERSTRUCTURE
F.A.I. RT. 57 - Sec. 77-1B-1
PULASKI COUNTY
STA. 171+94

I-4 Drawn 4-3-58 Rev. 9-10-58 9-22-58 9-26-58 10-8-58

Revised 11-15-62 Bottom Slab (Distribution steel) changed from #7 @ 8" to #5 @ 12". Also the quantity of b bars chgd. from 384 to 368 & lb. of bars from 17,890 to 17,460 lbs.

Revised 8/16/65 Changed b, b1, b2, b3, b4, b5, b6 from 5/8" round & 1/2" to 7/8" to Extruded Al. Tubing changed railing from 1 1/2" to 1 1/4" in Sections A-A, removed end holes in Expansion Guard angles, changed shims from 1/8" thick to 1/16" thick and added rear hole. W.L.J.

Rev. 4/14/69 Aluminum drains chgd. from 3"x6" to 4"x12" Aluminum welded plates C.L.C.

USER NAME = nhc	DESIGNED - ELH	09/24	REVISED -		
ESCA PROJECT NO.= 1423.04	CHECKED - ARD	10/24	REVISED -		
PLOT SCALE = 0:2 ':" / in.	DRAWN - IRC	09/24	REVISED -		
PLOT DATE = 2/3/2025	CHECKED - ELH	09/24	REVISED -		

ESCA CONSULTANTS, INC.

STATE OF ILLINOIS
DEPARTMENT OF TRANSPORTATION

EXISTING BRIDGE PLANS - FOR INFORMATION ONLY
SN 077-0007 (NB) & SN 077-0008 (SB)

SHEET 36 OF 39 SHEETS

F.A.I. RTE.	SECTION	COUNTY	TOTAL SHEETS	SHEET NO.
57	D9 BRIDGE REPAIR 25-4	PULASKI	103	99

CONTRACT NO. 78A80

ILLINOIS | FED. AID PROJECT

MODEL: Sheet
FILE NAME: Y:\IDOT\1423-04_78A80\CADD\SP SN 077-0007_0008\0770007-78A80-36-ExistingBridgePlans.dgn
2/3/2025 11:22:55 AM

STATE OF ILLINOIS
DEPARTMENT OF PUBLIC WORKS & BUILDINGS
DIVISION OF HIGHWAYS

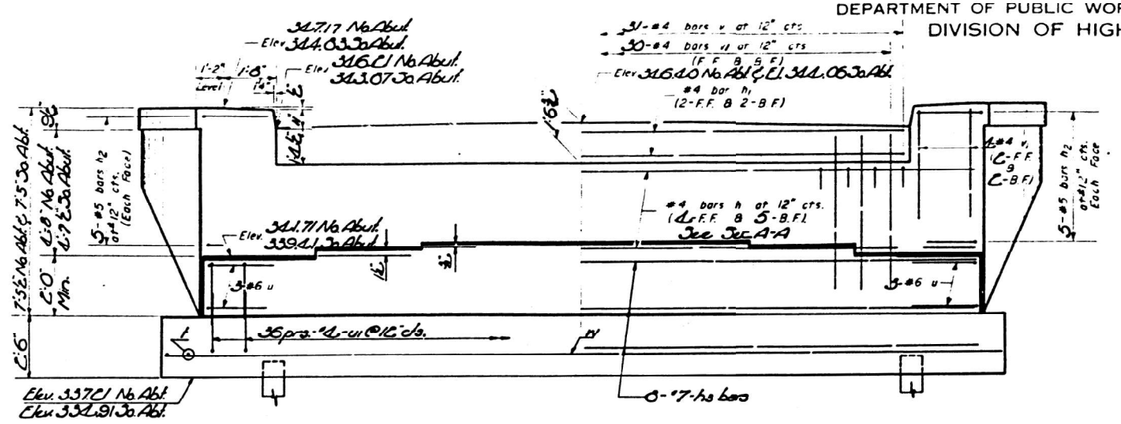

ELEVATION

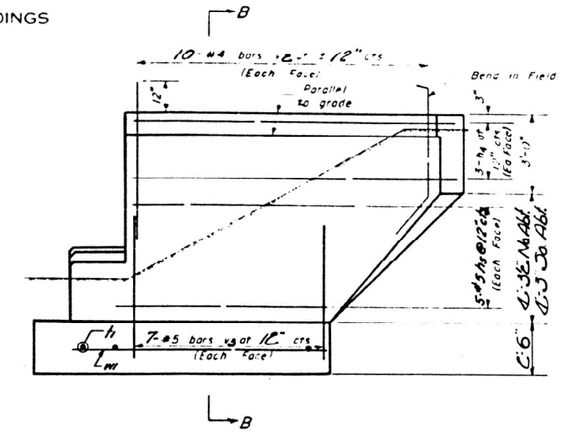

SIDE ELEVATION

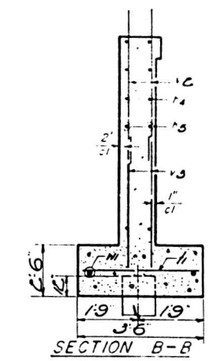

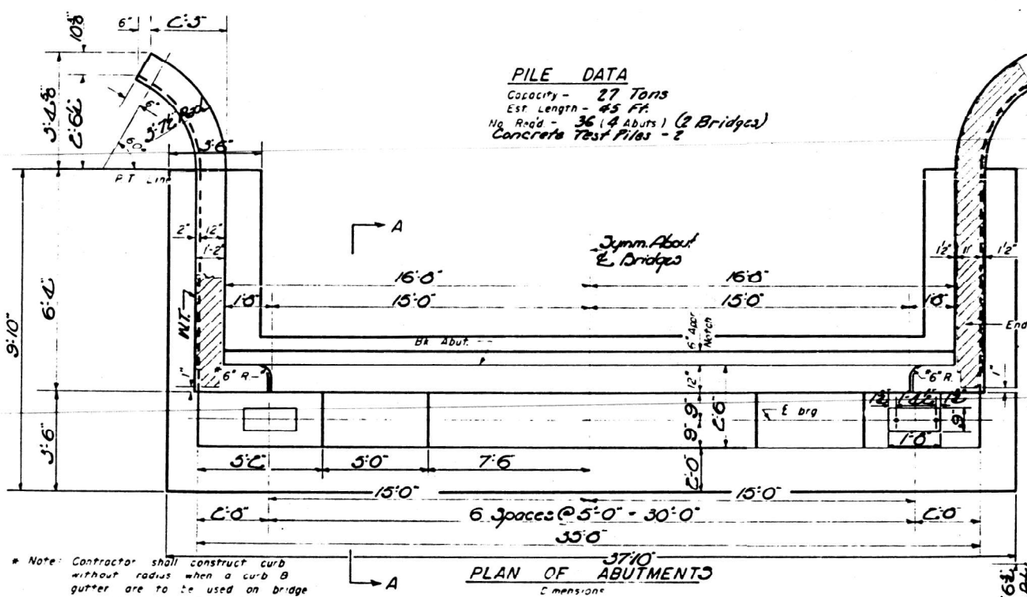

PLAN OF ABUTMENTS
Dimensions

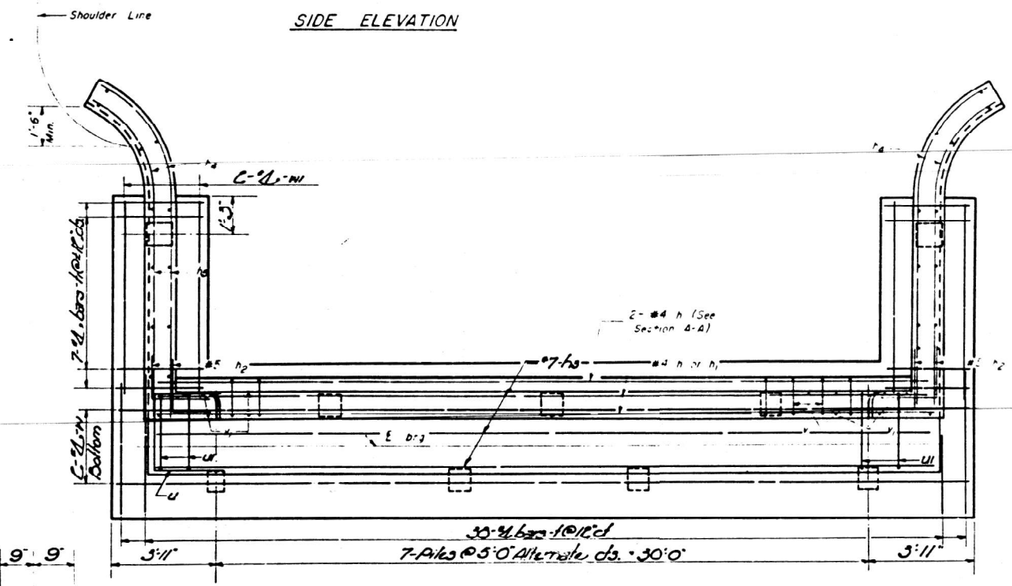

PLAN OF ABUTMENTS
Reinforcement & Pile Spacing

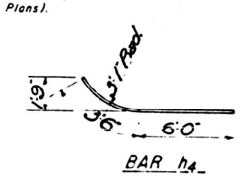

BAR h4

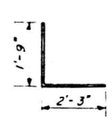

BAR h2

BAR v

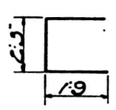

BAR u1

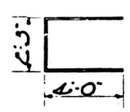

BAR u

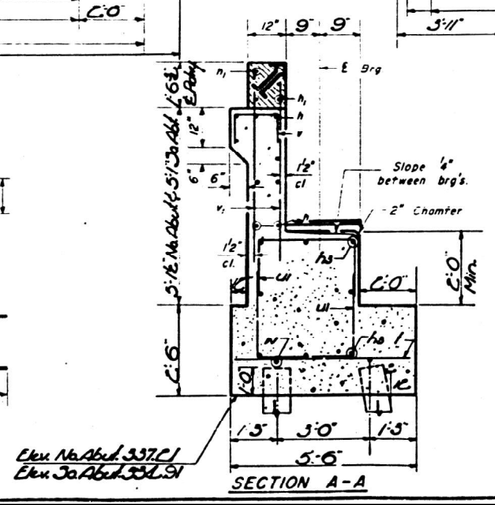

SECTION A-A

ONE BRIDGE
BILL OF REINFORCEMENT

Bar	No.	Size	Length	Shape	Bar	No.	Size	Length	Shape
h	36	#4	10'-0"	—					
h1	8	#4	29'-9"	—					
h2	40	#5	7'-7"	L					
h3	16	#7	37'-0"	—	v2	80	#5	5'-3"	—
h4	24	#5	9'-6"	—	v3	56	#5	5'-0"	—
h5	40	#5	6'-0"	—	v	62	#4	2'-3"	⊓
l	76	#4	5'-3"	—	v1	136	#4	5'-9"	—
l1	88	#4	3'-3"	—					
					N	8	#4	19'-3"	—
u	16	#6	10'-3"	⊏	M	8	#4	6'-6"	—
u1	144	#4	5'-9"	⊏					

ONE BRIDGE
BILL OF MATERIAL

Item	Unit	Quantity
Class X Concrete	Cu. Yd.	77.3
Reinforcement Bars	Lb.	4870
Concrete Piles	Lin. Ft.	765
Concrete Test Piles	Each	1

C. Lewis Carter
Chas. H. Bell
W. L. Jacobs
W. A. Sousoman
Oct 21 60
H. E. Baumann
R. K. Bartelsmeyer

A-3 Drawn 5-21-59 Rev. 9-26-58

EAST & WEST BRIDGES
ABUTMENTS
F.A.I. RT. 57 ~ SEC. 77-1D-1
PULASKI COUNTY
STA. 171 + 94

STATE OF ILLINOIS
DEPARTMENT OF PUBLIC WORKS & BUILDINGS
DIVISION OF HIGHWAYS

F.A.I.	SECTION	COUNTY	TOTAL SHEETS	SHEET NO.
57	77-1B-1	Pulaski	22	13

SHEET NO 7
10 SHEETS

Boring No. 1

Boring located at Station 173+24, 42 Ft Lt Centerline.

Description	Elevation	Blows per Foot	∂
Surface of Ground.	328.8		
Medium mottled silty clay loam.	326.0		
	323.0		
	320.0		
	317.0		
Soft gray alluvial clay.			
	314.0		
	311.0		
	308.0		
Medium gray fine sand.	305.0		
	304.0	12	
	302.5		
	301.0		
	299.0	8	
Loose gray fine sand.	297.5		
	296.0		
	294.5	22	
Medium gray fine sand.	293.0		
	290.5		
	289.5	40	
Dense gray fine sand.	288.0		

Boring No. 1 Cont.

Description	Elevation	Blows per Foot	∂
Dense gray fine sand.	284.0	30	
	282.5		
	281.5		
Very dense fine gray sand.	279.0	54	
	277.5		
	276.5		
	274.0	30	
Dense fine gray sand.	272.5		
	269.0	32	
	267.5		

Boring No. 2

Boring located at Station 172+76, 44 Ft Lt Centerline.

Description	Elevation	Blows per Foot	∂
Surface of Ground.	327.7		
Medium mottled aluvial clay.	322.5	6	0.90
	321.0		
	320.0		
	319.5	4	Lost
	318.5		
Very soft gray aluvial clay, high organic fiber content.	317.5	2	0.20
	316.0		
	315.0	2	0.16
	313.5		
	313.0		
	312.5	1	0.38
	311.0		
Soft gray clear aluvial clay.	310.0	1	Lost
	308.5		
	307.5	1	0.34
Soft gray clear aluvial clay.	306.0		
	305.5		
	305.0	12	
	303.5		
	302.5	14	
	301.0		
Medium gray fine uniform angular sand.	297.5	11	
	296.0		
	292.5	21	
	291.0		
	290.0		
Very dense gray fine sand.	286.5	56	
	285.0		

Boring No. 2 Cont.

Description	Elevation	Blows per Foot	∂
Very dense gray fine sand.	282.5	60	
	281.0		
	279.5		
	277.5	38	
	276.0		
Dense gray fine sandy loam.			
	272.5	36	
	271.0		
	267.5	42	
	266.0		

Boring No. 3

Boring located at Station 173+36, 37 Ft Lt Centerline.

Description	Elevation	Blows per Foot	∂
Surface of Ground.	328.3	Sample #1	
Medium mottled silty clay loam.	325.5	#2	
	322.5	#3	
	319.5		
Tree roots, soft gray alluvial clay.		#4	
	316.5		
	313.5	#5	
Medium gray aluvial clay.	310.5	#6	
	307.5	#7	
Medium gray aluvial clay.		#8	
	304.5	#9	
Medium gray silty sandy clay.	301.5	#10	
	298.5		
Loose silty clayey dark gray sand.	297.0		
	295.5		
Dense silty clayey fine gray sand.	293.5	30	
	292.0		
	290.5		
Medium gray fine sand.	289.5	26	
	287.0		

Boring No. 3 Cont.

Description	Elevation	Blows per Foot	∂
	284.5		
	283.5	70	
	282.0		
	278.5	56	
Very dense gray fine silty sand.	277.0		
	273.5	74	
	272.0		
	270.5	68	
	267.0		

C. Lawrence Corlew
Chairman
Brown

Oct 21 '60
W.E. Baumann
E.L. Harrison
R.R. Bartelsmeyer

BORINGS No. 1, 2 & 3
F.A.I. RT. 57 - SEC. 77-1B-1
PULASKI COUNTY
STA. 177+94

MODEL: Sheet
FILE NAME: Y:\IDOT\1423-04_78A80\CADD\SP SN 077-0007_0008\07700007-78A80-38-ExistingBridgePlans.dgn
2/3/2025 11:23:03 AM

ESCA CONSULTANTS, INC.

USER NAME = nhc	DESIGNED - ELH 09/24	REVISED -
ESCA PROJECT NO.= 1423.04	CHECKED - ARD 10/24	REVISED -
PLOT SCALE = 0:2 ':' / in.	DRAWN - IRC 09/24	REVISED -
PLOT DATE = 2/3/2025	CHECKED - ELH 09/24	REVISED -

STATE OF ILLINOIS
DEPARTMENT OF TRANSPORTATION

EXISTING BRIDGE PLANS - FOR INFORMATION ONLY
SN 077-0007 (NB) & SN 077-0008 (SB)
SHEET 38 OF 39 SHEETS

F.A.I. RTE.	SECTION	COUNTY	TOTAL SHEETS	SHEET NO.
57	D9 BRIDGE REPAIR 25-4	PULASKI	103	101

CONTRACT NO. 78A80
ILLINOIS FED. AID PROJECT

STATE OF ILLINOIS
DEPARTMENT OF PUBLIC WORKS & BUILDINGS
DIVISION OF HIGHWAYS

F.A.I. RTE.	SECTION	COUNTY	TOTAL SHEETS	SHEET NO.
FAI 57	77-18-1	Pulaski	22	14

SHEET NO. 8 / 10 SHEETS

Boring No. 4
Boring located at Station 171+94, 45 Ft Rt centerline.

Description	Elevation	Blows per Foot	δ
Surface of Ground.	327.3		
Medium brown silty clay.	325.0	2	0.82
	323.5		
	323.0		
	322.5	6	1.18
Stiff dark gray silty clay.	321.0		
	319.5	5	1.30
	318.0		
	317.5		
	316.5	3	0.86
	315.0		
Medium gray silty clay and leaves.	313.5	4	0.90
	312.0		
	310.5	2	[illegible]
	[illegible]		
	303.5		
Stiff blue sandy silty clay.	307.5	3	1.10
	306.0		
	305.5		
	304.0	11	
	302.5		
Medium fine gray sand.	301.0	16	
	299.5		
	295.0		
	293.0	31	
	291.5		
Very dense fine gray sand.			
	288.0	33	
	286.5		

Description	Elevation	Blows per Foot	δ
	283.0	30	
	281.5		
Very dense fine gray sand.			
	278.0	56	
	276.5		
	273.0	72	
	271.0		

Boring No. 5
Boring located at Station 172+44, Centerline of Survey

Description	Elevation	Blows per Foot	δ
Surface of Ground.	327.0		
Soft gray silty clay.	324.0		
	321.0		
	318.0		
Soft blue-gray silty clay, woody.	315.0		
	312.0		
	[illegible]		
Soft blue-gray silty clay, woody.	[illegible]		
	303.0		
	302.0	10	
	300.5		
	297.0	14	
Medium gray angular fine sand.	295.5		
	292.0	21	
	290.5		
	289.0		
Dense gray angular fine sand.	287.0	32	
	285.5		

Description	Elevation	Blows per Foot	δ
	284.5		
Medium fine gray sand.	282.0	28	
	280.5		
	278.0		
	277.0	60	
	275.5		
Very dense gray fine sand.			
	272.0	52	
	270.5		
	269.0		
Dense fine gray angular sand.	267.0	48	
	265.5		

Boring No. 6
Boring located at Station 171+11, 15 Ft Rt centerline.

Description	Elevation	Blows per Foot	δ
Surface of Ground.	327.1		
Stiff brown silty clay.	324.5	3	1.43
	323.0		
	322.5		
	322.0	4	0.34
	320.5		
Soft gray clay, woody.	319.0	2	0.29
	317.5		
	315.0	1	0.45
	314.5		
	314.0		
	313.0	2	0.90
	311.5		
Medium blue silty clay, leafy.	310.0	5	0.98
	308.5		
	307.0	4	0.82
Medium blue silty clay, leafy.	305.5		
	304.0	6	Lost
	302.5		
	302.0		
	298.0	13	
Medium gray sand.	296.5		
	293.0	21	
	291.5		
	290.0		
Dense fine gray sand.	288.0	33	
	286.5		

Description	Elevation	Blows per Foot	δ
	283.0	36	
	281.5		
Dense fine gray sand.			
	278.0	47	
	276.5		
	275.0		
	273.0	56	
Very dense fine gray sand.	271.5		
	268.0	51	
	266.5		

DESIGNED	C. James Corlew	OCT. 21 1960
CHECKED	[illegible]	EXAMINED W. Baumann
DRAWN	Brown	PASSED [illegible]
CHECKED	[illegible]	APPROVED R.R. Bartelsmeyer

BORINGS No. 4, 5, & 6
F.A.I. Rt. 57 - Sec. 77-18-1
PULASKI COUNTY
STA. 177+94

MODEL: Sheet
FILE NAME: Y:\IDOT\1423-04_78A80\CADD\SP SN 077-0007_0008\0770007-78A80-39-ExistingBridgePlans.dgn

ESCA CONSULTANTS, INC.

USER NAME = nhc	DESIGNED - ELH	09/24	REVISED -	STATE OF ILLINOIS DEPARTMENT OF TRANSPORTATION	EXISTING BRIDGE PLANS - FOR INFORMATION ONLY SN 077-0007 (NB) & SN 077-0008 (SB)
ESCA PROJECT NO.= 1423.04	CHECKED - ARD	10/24	REVISED -		
PLOT SCALE = 0:2 ':" / in.	DRAWN - IRC	09/24	REVISED -		
PLOT DATE = 2/3/2025	CHECKED - ELH	09/24	REVISED -		SHEET 39 OF 39 SHEETS

F.A.I. RTE.	SECTION	COUNTY	TOTAL SHEETS	SHEET NO.
57	D9 BRIDGE REPAIR 25-4	PULASKI	103	102
		CONTRACT NO. 78A80		
		ILLINOIS	FED. AID PROJECT	

2/3/2025 11:23:06 AM

UNEVEN LANES SIGN

W8-11 (48" x 48")

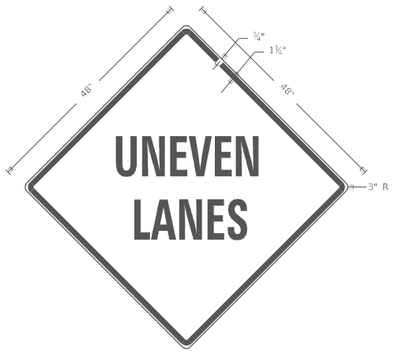

COLORS:

LEGEND AND BORDER - BLACK NON-REFLECTORIZED
BACKGROUND - ORANGE REFLECTORIZED

NOTE: PRIOR TO ALLOWING TRAFFIC ON ANY PORTION OF THE ROADWAY THAT HAS BEEN COLDMILLED OR BEFORE RESURFACING OPERATIONS BEGIN, THE CONTRACTOR SHALL HAVE ERECTED "UNEVEN PAVEMENT" SIGNS THAT CONFORM TO THE ABOVE DETAILS. A MINIMUM OF ONE SIGN AT EACH END OF THE IMPROVEMENT WILL BE REQUIRED. THE CONTRACTOR SHALL MAINTAIN THE "UNEVEN PAVEMENT" SIGNS UNTIL THE RESURFACING OPERATIONS ARE COMPLETED.

IF AT ANY TIME THE SIGNS ARE IN PLACE BUT NOT APPLICABLE, THEY SHALL BE TURNED FROM THE VIEW OF MOTORISTS OR COVERED AS DIRECTED BY THE ENGINEER.

THE COST OF FURNISHING, ERECTING, MAINTAINING, AND REMOVING THE REQUIRED SIGNS SHALL BE INCLUDED IN THE CONTRACT.

REVISIONS

DRAWN	2-15-89
REVISED	4-06-93
REDSIGNED	7-23-04
RESIZED	5-08-08
REVIEWED	5-17-13
REVISED	10-21-21

STD. 9-41

ILLINOIS STANDARD

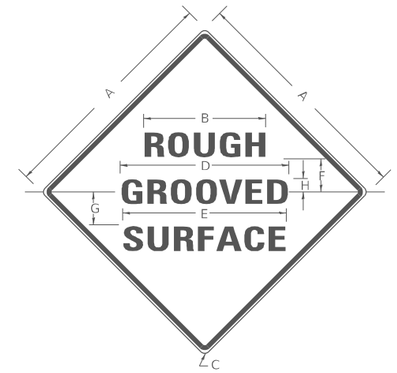

COLORS:

LEGEND AND BORDER- BLACK NON-REFLECTORIZED
BACKGROUND- ORANGE REFLECTORIZED

SIGN SIZE	DIMENSIONS							
	A	B	C	D	E	F	G	H
48X48	48.0	24.1	3.0	34.0	33.0	6.0	13.0	3.5

SIGN SIZE	SERIES LINES			MAR-GIN	BOR-DER	BLANK STD.
	1	2	3			
48X48	7C	7C	7C	0.8	1.2	B4-48D

ALL DIMENSIONS IN INCHES

NOTES:

PRIOR TO ALLOWING TRAFFIC ON ANY PORTION OF THE ROADWAY THAT HAS BEEN COLDMILLED, THE CONTRACTOR SHALL HAVE ERECTED "ROUGH GROOVED SURFACE" SIGNS THAT CONFORM TO THE ABOVE DETAILS. A MINIMUM OF ONE SIGN AT EACH END OF THE IMPROVEMENT WILL BE REQUIRED. THE CONTRACTOR SHALL MAINTAIN THE "ROUGH GROOVED SURFACE" SIGNS UNTIL THE COLDMILLED SURFACE IS COVERED WITH LEVELING BINDER OR SURFACE COURSE.

IF AT ANY TIME THE SIGNS ARE IN PLACE BUT NOT APPLICABLE, THEY SHALL BE TURNED FROM THE VIEW OF MOTORISTS OR COVERED AS DIRECTED BY THE ENGINEER.

THE COST OF FURNISHING, ERECTING, MAINTAINING, AND REMOVING THE REQUIRED SIGNS SHALL BE INCLUDED IN THE CONTRACT.

REVISIONS

REDRAWN	2-15-89
REVISED	4-6-93
REVISED	3-27-08
REVIEWED	5-17-13
REVISED	10-21-21

STD. 9-39

TYPICAL UNDERDRAIN OUTLET MARKER DETAIL

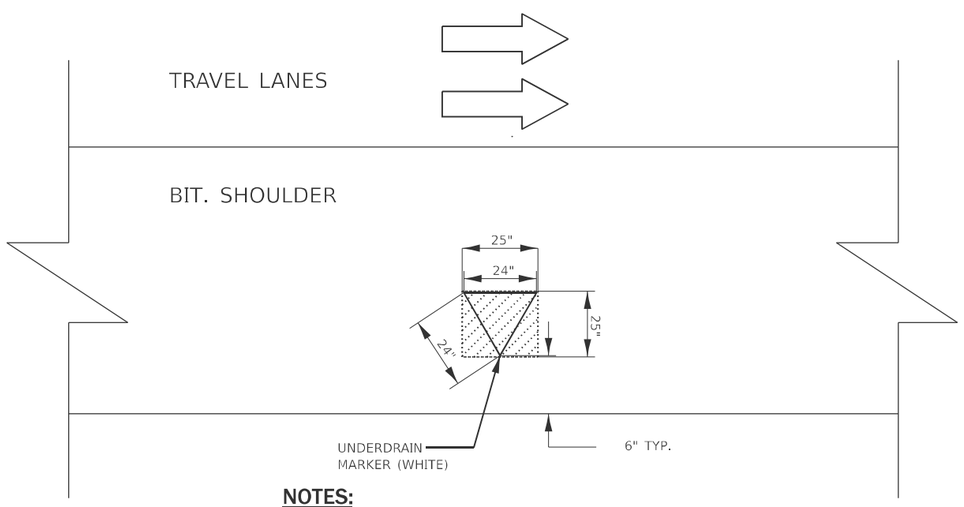

NOTES:

TO BE PAID FOR AS POLYUREA PAVEMENT MARKING LETTERS AND SYMBOLS (USE 2 SQ FT FOR AREA)

GROOVING FOR THERMOPLASTIC PAVEMENT MARKING-LETTERS & SYMBOLS MEASURED AS 25"x25" SQUARE

MODEL: District Details [Sheet]
FILE NAME: c:\pw_work\pwidot\nathaniel.morris@illinois.gov\d0985771\D978A80-Sht5-DistrictStds.dgn

USER NAME = nathaniel.morris	DESIGNED -	REVISED -	STATE OF ILLINOIS DEPARTMENT OF TRANSPORTATION
	DRAWN -	REVISED -	
	CHECKED -	REVISED -	
PLOT DATE = 2/11/2025	DATE -	REVISED -	

DISTRICT DETAILS

SCALE: SHEET 103 OF 1 SHEETS STA. TO STA.

F.A.I RTE.	SECTION	COUNTY	TOTAL SHEETS	SHEET NO.
57	*	PULASKI	103	103
		CONTRACT NO. 78A80		
	ILLINOIS	FED. AID PROJECT		

77(1,1-1,1-2,1-3,2,2-1,3)RS-3;Bridge Repair 25-4