PART OF SW 1/4 OF NW 1/4 OF SECTION 9 TWP.44N., R.7E. OF THE 3RD. P.M., IN McHENRY COUNTY, ILLINOIS.

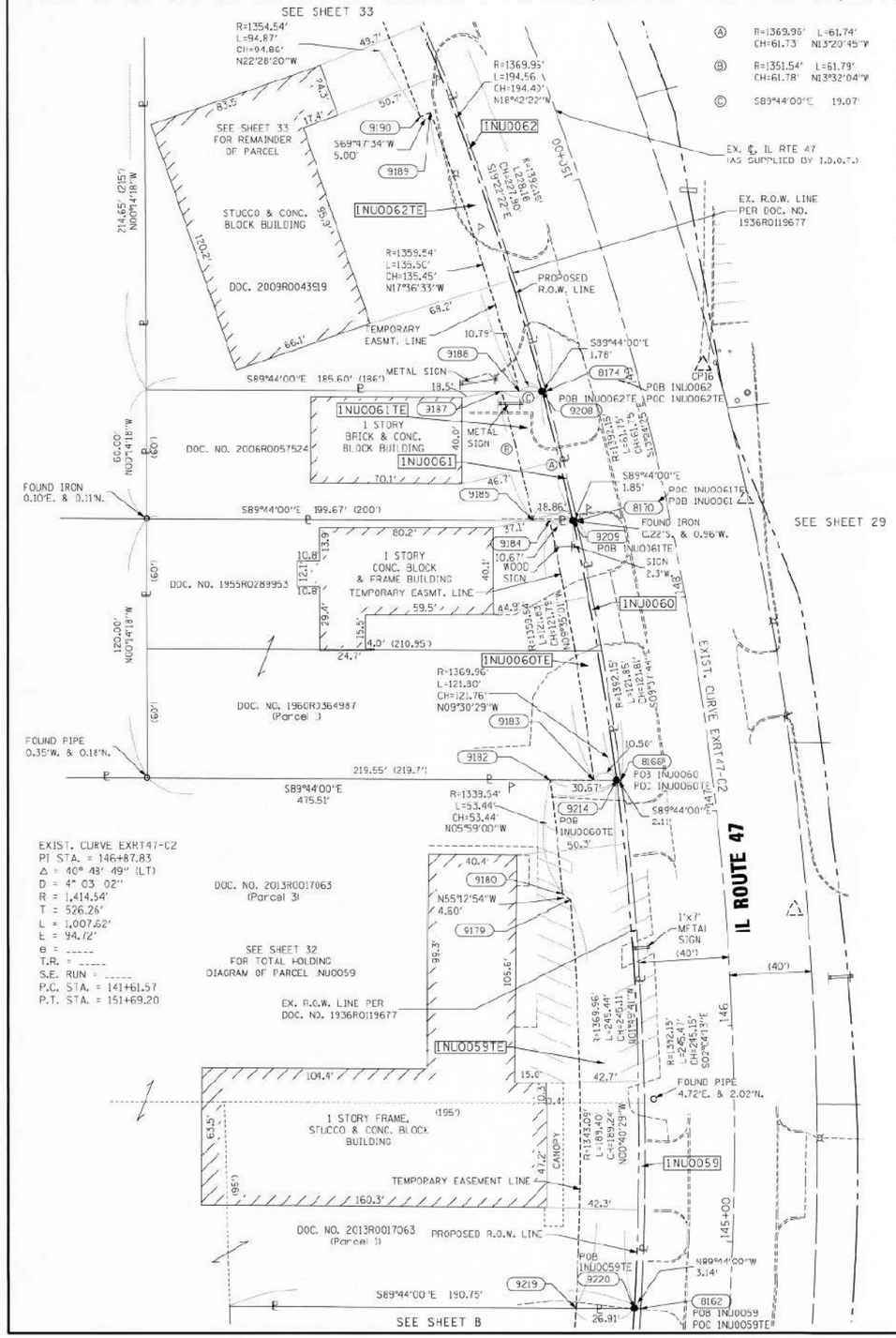

PARCEL NUMBER	TOTAL HOLDINGS ACRES	PART TAKEN ACRES	AREA IN EXISTING R.O.W. ACRES	REMAINDER AREA ACRES	EASEMENT AREA ACRES	EASEMENT AREA SQUARE FEET	PARCEL INDEX NUMBER
1NU0059 1NU0059TE	4.024	0.014		4.010	0.156		13-09-151-010 13-09-151-006 13-09-151-007
1NU0060 1NU0060TE	0.580	0.005 235 S.F.		0.575	0.029		13-09-151-004 13-09-151-005
1NU0061 1NU0061TE	0.266	0.002 108 S.F.		0.264	0.026		13-09-151-003
1NU0062 1NU0062TE	0.747	0.010		0.737	0.064		13-09-151-002

SURVEY NOTES:
1. ALL DIMENSIONS ARE MEASURED UNLESS NOTED OTHERWISE.
2. BEARINGS DISTANCES AND COORDINATES SHOWN HEREON REFERENCE THE ILLINOIS STATE PLANE COORDINATE SYSTEM, EAST ZONE, NAD83 (2011 ADJUSTMENT) "GRID".
3. ALL MEASURED AND CALCULATED) DISTANCES AREA "GRID" NOT "GROUND". TO OBTAIN GROUND DISTANCES, DIVIDE GRID DISTANCES SHOWN BY THE SCALE FACTOR OF 0.99993761.
4. AREAS SHOWN ON THIS PLAT ARE "GROUND".
5. FIELD SURVEY COMPLETED ON MARCH 26, 2020.

PROJECT COORDINATES
Illinois State Plane, East Zone, NAD83 (2011)
EXISTING CENTERLINE, IL ROUTE 47

PT#	STATION	OFFSET	NORTH	EAST
16	146+02.34	30.00	2054952.151	957715.504
8162	144+66.26	-41.44	2054514.714	957686.066
8166	147+19.24	-42.49	2054759.704	957677.240
8170	148+41.87	-42.78	2054879.795	957655.866
8174	149+08.55	-42.86	2054939.860	957642.519
9179	146+64.06	-71.45	2054704.083	957653.884
9180	146+67.15	-75.00	2054706.706	957650.025
9182	147+23.59	-75.00	2054759.856	957644.405
9183	147+20.89	-55.00	2054759.762	957664.620
9184	148+47.65	-55.00	2054879.853	957644.343
9185	148+49.49	-63.00	2054879.891	957636.310
9187	149+14.16	-63.00	2054939.957	957621.602
9188	149+11.51	-55.00	2054939.919	957629.936
9189	150+52.90	-55.00	2055069.020	957589.000
9190	150+52.92	-60.00	2055067.293	957584.338
9208	148+09.03	-44.58	2054939.868	957640.761
9209	148+45.28	-44.58	2054879.804	957655.011
9214	147+19.51	-44.58	2054759.713	957675.124
9219	144+64.59	-71.45	2054514.854	957656.032
9220	144+66.09	-44.58	2054514.729	957682.943

LEGEND

SECTION CORNER
QUARTER SECTION CORNER
GRAPHIC SCALE FEET
SCALE: 1"=30'

- SECTION / QUARTER SECTION LINE
- PLATTED LOT LINES
- PROPERTY (DEED) LINE
- APPARENT PROPERTY LINE (APL)
- EXISTING CENTERLINE
- PROPOSED CENTERLINE
- EXISTING RIGHT OF WAY LINE
- PROPOSED RIGHT OF WAY LINE
- EXISTING EASEMENT
- PROPOSED EASEMENT
- EXISTING ACCESS CONTROL LINE (AC)
- PROPOSED ACCESS CONTROL LINE (AC)
- 129.32' MEASURED DIMENSION
- 129.32' (COMP) COMPUTED DIMENSION
- (129.32') RECORDED DIMENSION
- EXISTING BUILDING

BEARINGS ARE REFERENCED TO THE ILLNOIS STATE PLANE COORDINATE SYSTEM,NAD83 (2011 ADJUSTMENT),EAST ZONE.

- ○ IRON PIPE OR ROD FOUND
- + CUT CROSS FOUND OR SET
- ⊕ "MAG" NAIL SET
- ● 5 / 8"REBAR SET
- ■ STAKING OF PROPOSED RIGHT OF WAY. SET DIVISION OF HIGHWAYS SURVEY MARKER TO MONUMENT THE POSITION SHOWN. IDENTIFIED BY INSCRIPTION DATA AND SURVEYORS REGISTRATION NUMBER.
- ■ h STAKING OF PROPOSED RIGHT OF WAY IN CULTIVATED AREAS. BURIED 5/8 INCH METAL ROD 20 INCHES BELOW GROUND TO MARK FUTURE SURVEY MARKER POSITION IDENTIFIED BY COLORED PLASTIC CAP BEARING SURVEYORS REGISTRATION NUMBER.
- ◒ PERMANENT SURVEY MARKER, I.D.O.T. STANDARD 667101-02 (TO BE SET BY OTHERS)
- □ RIGHT OF WAY STAKING PROPOSED TO BE SET

STATE OF ILLINOIS)
)SS
COUNTY OF WILL)

THIS IS TO CERTIFY THAT I, KENNETH J. PESAVENTO, AN ILLINOIS PROFESSIONAL LAND SURVEYOR, (WE, RUETTIGER, TONELL & ASSOCIATES, AN ILLINOIS PROFESSIONAL DESIGN FIRM LAND SURVEYING CORPORATION, NUMBER [84-001251,) HAVE SURVEYED THE PLAT OF HIGHWAYS SHOWN HEREON IN SECTION 9, TOWNSHIP 44 NORTH, RANGE 7 EAST OF THE THIRD PRINCIPAL MERIDIAN, McHENRY COUNTY, THAT THE SURVEY IS TRUE AND COMPLETE AS SHOWN TO THE BEST OF MY KNOWLEDGE AND BELIEF, THAT THE PLAT CORRECTLY REPRESENTS SAID SURVEY, THAT ALL MONUMENTS FOUND AND ESTABLISHED ARE OF PERMANENT QUALITY AND OCCUPY THE POSITIONS SHOWN THEREON AND THAT THE MONUMENTS ARE SUFFICIENT TO ENABLE THE SURVEY TO BE RETRACED, MADE FOR THE DEPARTMENT OF TRANSPORTATION, STATE OF ILLINOIS.

DATED AT SHOREWOOD, ILLINOIS THIS 28TH DAY OF JANUARY 2025 A.D.

ILLINOIS PROFESSIONAL LAND SURVEYOR NO. 3425
LICENSE EXPIRATION DATE: 11-30-2026

THIS PROFESSIONAL SERVICE CONFORMS TO THE CURRENT ILLINOIS MINIMUM STANDARDS FOR A BOUNDARY SURVEY.

KENNETH J. PESAVENTO 3425 PROFESSIONAL LAND SURVEYOR STATE OF ILLINOIS SHOREWOOD, ILLINOIS

Ruettiger, Tonelli & Associates, Inc.
Surveyors • Engineers • Planners • Landscape Architects • GIS Consultants
129 CAPITAL DRIVE - SHOREWOOD, ILLINOIS 60404
TEL (815) 744-6600 FAX (815) 744-8101
website: www.ruettigertonelli.com

R.T. & A. Dwg. No.: 2020-0163.00

PLAT OF HIGHWAYS
STATE OF ILLINOIS
DEPARTMENT OF TRANSPORTATION
ILLINOIS ROUTE 47

LIMITS: IL 120 TO US 14 — COUNTY: McHENRY
SECTION: — JOB NO.: R-91-019-17
STA. 144+66.09 TO STA. 150+52.92
SCALE: 1"=30' — SHEET 30 OF 57 SHEETS

IDOT USE ONLY

BUREAU OF LAND ACQUISITION
201 WEST CENTER COURT
SCHAUMBURG, ILLINOIS 60196

REVISION DATE: / / REVISION MADE BY:

FOR REFERENCE ONLY - N.T.S.

AECOM
303 EAST WACKER DRIVE, SUITE 1400
CHICAGO, IL 60601-5276
PHONE: (312) 373-7700 FAX: (312) 373-6800

USER NAME = muniza	DESIGNED -	REVISED -	
	DRAWN -	REVISED -	
PLOT SCALE = 100.0000 ' / in.	CHECKED -	REVISED -	
PLOT DATE = 2/7/2025	DATE -	REVISED -	

STATE OF ILLINOIS
DEPARTMENT OF TRANSPORTATION

SCALE: SHEET OF SHEETS STA. TO STA.

F.A.P. RTE.	SECTION	COUNTY	TOTAL SHEETS	SHEET NO.
326	2024-1052-N,C,SW,FL	MCHENRY	941	601
		CONTRACT NO. 62X94		
	ILLINOIS FED. AID PROJECT			

MODEL: Default
FILE NAME: pw:\\aecom-na-pw.bentley.com:AECOM_0521_NA_2020Documents\60632011-IL-47(900-CAD)\10_CAD\03_SHEETS\General\D160X17-sht-PLAT.dgn

PART OF SW 1/4 OF NW 1/4 OF SECTION 9 TWP.44N., R.7E. OF THE 3RD. P.M., IN McHENRY COUNTY, ILLINOIS.

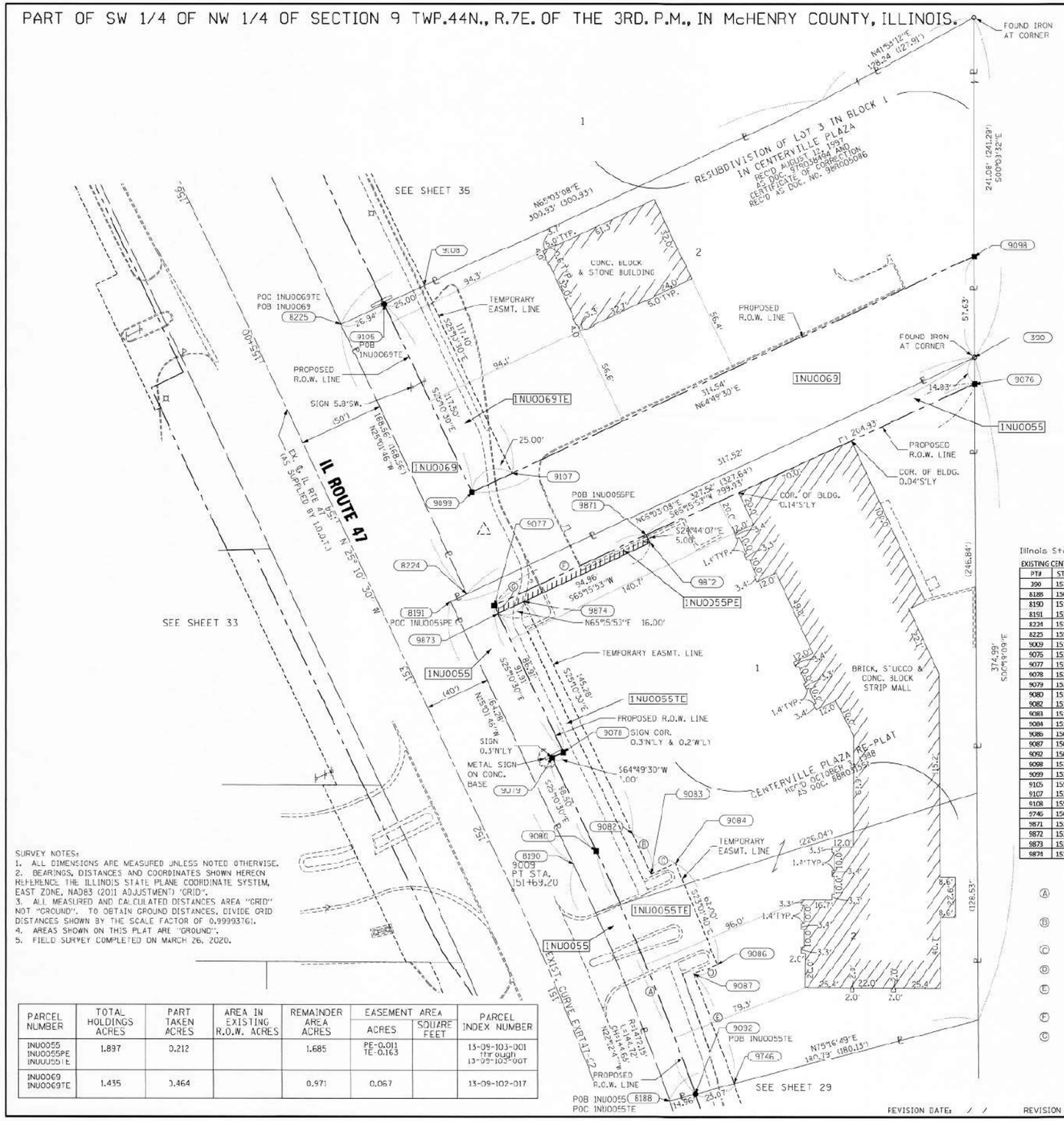

SURVEY NOTES:
1. ALL DIMENSIONS ARE MEASURED UNLESS NOTED OTHERWISE.
2. BEARINGS, DISTANCES AND COORDINATES SHOWN HEREON REFERENCE THE ILLINOIS STATE PLANE COORDINATE SYSTEM, EAST ZONE, NAD83 (2011 ADJUSTMENT) 'GRID'.
3. ALL MEASURED AND CALCULATED DISTANCES AREA "GRID" NOT "GROUND". TO OBTAIN GROUND DISTANCES, DIVIDE GRID DISTANCES SHOWN BY THE SCALE FACTOR OF 0.9999376].
4. AREAS SHOWN ON THIS PLAT ARE "GROUND".
5. FIELD SURVEY COMPLETED ON MARCH 26, 2020.

PARCEL NUMBER	TOTAL HOLDINGS ACRES	PART TAKEN ACRES	AREA IN EXISTING R.O.W. ACRES	REMAINDER AREA ACRES	EASEMENT AREA ACRES	EASEMENT AREA SQUARE FEET	PARCEL INDEX NUMBER
1NU0055 1NU0055PE 1NU0055TE	1.897	0.212		1.685	PE-0.011 TE-0.163		13-09-103-001 13-09-103-007
1NU0069 1NU0069TE	1.435	0.464		0.971	0.067		13-09-102-017

LEGEND

SECTION CORNER

QUARTER SECTION CORNER

N

GRAPHIC SCALE FEET
0 30
SCALE: 1"=30'

- SECTION / QUARTER SECTION LINE
- PLATTED LOT LINES
- PROPERTY (DEED) LINE
- APPARENT PROPERTY LINE (APL)
- EXISTING CENTERLINE
- PROPOSED CENTERLINE
- EXISTING RIGHT OF WAY LINE
- PROPOSED RIGHT OF WAY LINE
- EXISTING EASEMENT
- PROPOSED EASEMENT
- EXISTING ACCESS CONTROL LINE (AC)
- PROPOSED ACCESS CONTROL LINE (AC)
- 129.32' MEASURED DIMENSION
- 129.32' (COMP) COMPUTED DIMENSION
- (129.32') RECORDED DIMENSION
- EXISTING BUILDING

BEARINGS ARE REFERENCED TO THE ILLINOIS STATE PLANE COORDINATE SYSTEM, NAD83 (2011 ADJUSTMENT), EAST ZONE.

- ○ IRON PIPE OR ROD FOUND
- + CUT CROSS FOUND OR SET
- ⊕ "MAG" NAIL SET
- ● 5/8" REBAR SET
- ■ STAKING OF PROPOSED RIGHT OF WAY. SET DIVISION OF HIGHWAYS SURVEY MARKER TO MONUMENT THE POSITION SHOWN. IDENTIFIED BY INSCRIPTION DATA AND SURVEYORS REGISTRATION NUMBER.
- ■M STAKING OF PROPOSED RIGHT OF WAY IN CULTIVATED AREAS. BURIED 5/8 INCH METAL ROD 20 INCHES BELOW GROUND TO MARK FUTURE SURVEY MARKER POSITION IDENTIFIED BY COLORED PLASTIC CAP BEARING SURVEYORS REGISTRATION NUMBER.
- ◔ PERMANENT SURVEY MARKER, I.D.O.T. STANDARD 667101-02 (TO BE SET BY OTHERS)
- □ RIGHT OF WAY STAKING PROPOSED TO BE SET

PROJECT COORDINATES
Illinois State Plane, East Zone, NAD83 (2011)
EXISTING CENTERLINE, ILROUTE 47

PT#	STATION	OFFSET	NORTH	EAST
350	153+10.75	365.15	2055496.955	957857.181
8188	150+20.79	37.09	2055070.030	957684.412
8190	151+47.81	37.21	2055209.955	957629.722
8191	153+12.85	37.63	2055358.809	957560.218
8224	153+12.81	47.63	2055363.027	957569.285
8225	155+10.57	48.06	2055515.758	957497.970
9009	151+69.20	0.00	2055195.417	957595.437
9076	153+7.30	358.92	2055482.125	957857.264
9077	153+9.60	59.00	2055356.529	957584.854
9078	152+17.69	59.00	2055273.459	957623.949
9079	152+17.69	52.00	2055270.475	957617.614
9080	151+69.20	52.00	2055217.537	957642.497
9082	151+69.20	75.00	2055227.322	957663.313
9083	151+15.34	75.00	2055204.898	957671.806
9084	151+15.34	90.00	2055210.640	957687.487
9086	150+67.05	90.00	2055153.558	957711.739
9087	150+67.05	75.00	2055148.010	957697.817
9092	150+15.61	52.00	2055079.838	957698.882
9098	153+12.97	386.54	2055554.582	957857.038
9099	153+12.97	75.00	2055420.788	957572.379
9105	155+80.47	75.00	2055527.124	957522.396
9107	153+12.97	100.00	2055431.413	957595.004
9108	155+80.37	100.00	2055537.566	957545.064
9746	150+33.84	75.00	2055085.691	957721.199
9871	153+18.87	154.00	2055396.380	957584.854
9872	153+13.87	153.96	2055391.839	957673.233
9873	153+14.60	59.00	2055352.108	957586.981
9874	153+14.48	75.00	2055358.799	957601.514

- Ⓐ R=1466.54' L=148.87' CH=148.80' S22°16'02"E
- Ⓑ R=1489.54' L=25.12' CH=25.12' S24°41'33"E
- Ⓒ N65°47'28"E 15.00'
- Ⓓ S60°09'00"W 15.00'
- Ⓔ R=1489.54' L=68.56' CH=66.56' S20°34'01"E
- Ⓕ N65°15'53"E 95.00'
- Ⓒ N25°10'30"W 5.00'

EXIST. CURVE EXRT47-02
PI STA. = 146+87.83
Δ = 40° 48' 49" (LT)
D = 4° 03' 02"
R = 1,414.54'
T = 526.26'
L = 1,007.62'
E = 94.72'
e = -----
T.R. = -----
S.E. RUN = -----
P.C. STA. = 141+61.57
P.T. STA. = 151+69.20

STATE OF ILLINOIS)
)SS
COUNTY OF WILL)

THIS IS TO CERTIFY THAT I, KENNETH J. PESAVENTO, AN ILLINOIS PROFESSIONAL LAND SURVEYOR, (WE, RUETTIGER, TONELLI & ASSOCIATES, AN ILLINOIS PROFESSIONAL DESIGN FIRM LAND SURVEYING CORPORATION, NUMBER 184-001251,) HAVE SURVEYED THE PLAT OF HIGHWAYS SHOWN HEREON IN SECTION 9, TOWNSHIP 44 NORTH, RANGE 7 EAST OF THE THIRD PRINCIPAL MERIDIAN, McHENRY COUNTY, THAT THE SURVEY IS TRUE AND COMPLETE AS SHOWN TO THE BEST OF MY KNOWLEDGE AND BELIEF, THAT THE PLAT CORRECTLY REPRESENTS SAID SURVEY, THAT ALL MONUMENTS FOUND AND ESTABLISHED ARE OF PERMANENT QUALITY AND OCCUPY THE POSITIONS SHOWN THEREON AND THAT THE MONUMENTS ARE SUFFICIENT TO ENABLE THE SURVEY TO BE RETRACED, MADE FOR THE DEPARTMENT OF TRANSPORTATION, STATE OF ILLINOIS.

DATED AT SHOREWOOD, ILLINOIS THIS 28TH DAY OF JANUARY 2025 A.D.

KENNETH J. PESAVENTO
3425
PROFESSIONAL LAND SURVEYOR
STATE OF ILLINOIS

ILLINOIS PROFESSIONAL LAND SURVEYOR NO. 3425
LICENSE EXPIRATION DATE: 11-30-2026

THIS PROFESSIONAL SERVICE CONFORMS TO THE CURRENT ILLINOIS MINIMUM STANDARDS FOR A BOUNDARY SURVEY.

Ruettiger, Tonelli & Associates, Inc.
Surveyors•Engineers•Planners•Landscape Architects•GIS Consultants
129 CAPISTA DRIVE - SHOREWOOD, ILLINOIS 60404
PH. 815 744-6400 FAX (815) 744-6931
website: www.ruettigertonelli.com

R.T. & A. Dwg. No.: 2020-0163.00

PLAT OF HIGHWAYS
STATE OF ILLINOIS
DEPARTMENT OF TRANSPORTATION
ILLINOIS ROUTE 47

LIMITS: IL 120 TO US 14 — COUNTY: McHENRY
SECTION: — JOB NO.: R-9-019-17
STA. 150+25.61 TO STA. 155+03.57
SCALE: 1"=30' — SHEET 31 OF 67 SHEETS

IDOT USE ONLY

BUREAU OF LAND ACQUISITION
201 WEST CENTER COURT
SCHAUMBURG, ILLINOIS 60196

REVISION DATE: / / REVISION MADE BY:

FOR REFERENCE ONLY - N.T.S.

MODEL: Default
FILE NAME: pw:\\aecom-na-pw.bentley.com:AECOM_0521_NA_2020\Documents\60632011-IL-47900-CAD\910_CAD\03_SHEETS\General\D160X17-sht-PLAT.dgn

AECOM
303 EAST WACKER DRIVE, SUITE 1400
CHICAGO, IL 60601-5276
PHONE: (312) 373-7700 FAX: (312) 373-6800

USER NAME = muniza	DESIGNED -	REVISED -	
	DRAWN -	REVISED -	
PLOT SCALE = 100.0000 ' / in.	CHECKED -	REVISED -	
PLOT DATE = 2/7/2025	DATE -	REVISED -	

STATE OF ILLINOIS
DEPARTMENT OF TRANSPORTATION

SCALE: | SHEET OF SHEETS | STA. TO STA.

F.A.P. RTE.	SECTION	COUNTY	TOTAL SHEETS	SHEET NO.
326	2024-1052-N,C,SW,FL	MCHENRY	941	602
		CONTRACT NO. 62X94		
	ILLINOIS FED. AID PROJECT			

PART OF NW 1/4 OF SECTION 9 TWP.44N., R.7E. OF THE 3RD. P.M., IN McHENRY COUNTY, ILLINOIS.

SURVEY NOTES:
1. ALL DIMENSIONS ARE MEASURED UNLESS NOTED OTHERWISE.
2. BEARINGS, DISTANCES AND COORDINATES SHOWN HEREON REFERENCE THE ILLINOIS STATE PLANE COORDINATE SYSTEM, EAST ZONE, NAD83 (2011 ADJUSTMENT) 'GRID'.
3. ALL MEASURED AND CALCULATED DISTANCES ARE "GRID" NOT "GROUND". TO OBTAIN GROUND DISTANCES, DIVIDE GRID DISTANCES SHOWN BY THE SCALE FACTOR OF 0.99993761.
4. AREAS SHOWN ON THIS PLAT ARE "GROUND".
5. FIELD SURVEY COMPLETED ON MARCH 26, 2020.

PARCEL NUMBER	TOTAL HOLDINGS ACRES	PART TAKEN ACRES	AREA IN EXISTING R.O.W. ACRES	REMAINDER AREA ACRES	EASEMENT AREA		PARCEL INDEX NUMBER
					ACRES	SQUARE FEET	
INU0059 INU0059TE	4.024	0.014		4.010	0.156		13-09-151-010 13-09-151-009 13-09-151-007

TOTAL HOLDING DIAGRAM OF PARCEL INU0059
SCALE: 1"=60'

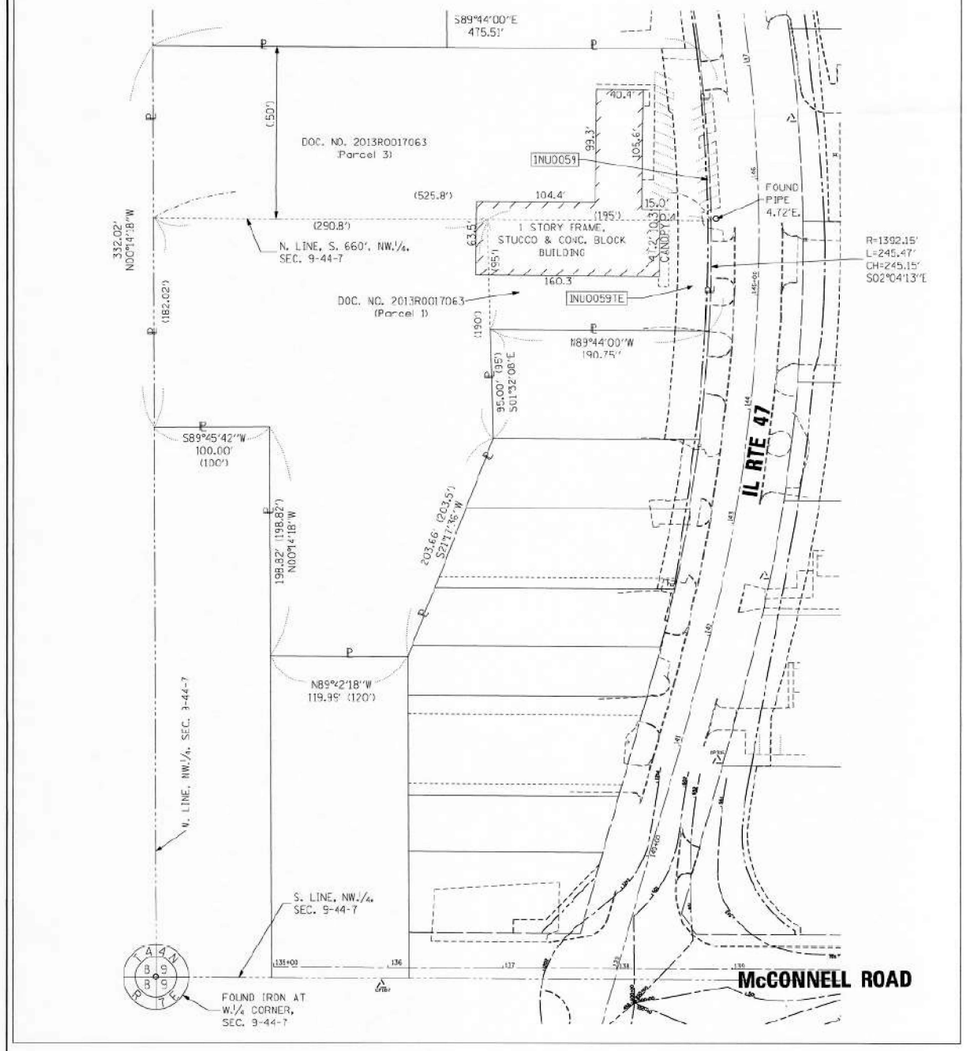

LEGEND

SECTION CORNER
QUARTER SECTION CORNER
N
GRAPHIC SCALE FEET
SCALE: 1"=30'

- SECTION / QUARTER SECTION LINE
- PLATTED LOT LINES
- P — PROPERTY (DEED) LINE
- APL — APPARENT PROPERTY LINE
- EXISTING CENTERLINE
- PROPOSED CENTERLINE
- EXISTING RIGHT OF WAY LINE
- PROPOSED RIGHT OF WAY LINE
- EXISTING EASEMENT
- PROPOSED EASEMENT
- AC — EXISTING ACCESS CONTROL LINE
- AC — PROPOSED ACCESS CONTROL LINE
- 129.32' MEASURED DIMENSION
- 129.32' (COMP) COMPUTED DIMENSION
- (129.32') RECORDED DIMENSION
- EXISTING BUILDING

BEARINGS ARE REFERENCED TO THE ILLINOIS STATE PLANE COORDINATE SYSTEM, NAD83 (2011 ADJUSTMENT), EAST ZONE.

- ○ IRON PIPE OR ROD FOUND
- ⊕ "MAG" NAIL SET
- \+ CUT CROSS FOUND OR SET
- ● 5/8" REBAR SET
- ■ STAKING OF PROPOSED RIGHT OF WAY. SET DIVISION OF HIGHWAYS SURVEY MARKER TO MONUMENT THE POSITION SHOWN. IDENTIFIED BY INSCRIPTION DATA AND SURVEYORS REGISTRATION NUMBER.
- ■ M STAKING OF PROPOSED RIGHT OF WAY IN CULTIVATED AREAS. BURIED 5/8 INCH METAL ROD 20 INCHES BELOW GROUND TO MARK FUTURE SURVEY MARKER POSITION IDENTIFIED BY COLORED PLASTIC CAP BEARING SURVEYORS REGISTRATION NUMBER.
- ◐ PERMANENT SURVEY MARKER, I.D.O.T. STANDARD 667101-02 (TO BE SET BY OTHERS)
- □ RIGHT OF WAY STAKING PROPOSED TO BE SET

STATE OF ILLINOIS)
) SS
COUNTY OF WILL)

THIS IS TO CERTIFY THAT I, KENNETH J. PESAVENTO, AN ILLINOIS PROFESSIONAL LAND SURVEYOR, (WE, RUETTIGER, TONELLI & ASSOCIATES, AN ILLINOIS PROFESSIONAL DESIGN FIRM LAND SURVEYING CORPORATION, NUMBER 184-001251,) HAVE SURVEYED THE PLAT OF HIGHWAYS SHOWN HEREON IN SECTION 9, TOWNSHIP 44 NORTH, RANGE 7 EAST OF THE THIRD PRINCIPAL MERIDIAN, McHENRY COUNTY, THAT THE SURVEY IS TRUE AND COMPLETE AS SHOWN TO THE BEST OF MY KNOWLEDGE AND BELIEF, THAT THE PLAT CORRECTLY REPRESENTS SAID SURVEY, THAT ALL MONUMENTS FOUND AND ESTABLISHED ARE OF PERMANENT QUALITY AND OCCUPY THE POSITIONS SHOWN THEREON AND THAT THE MONUMENTS ARE SUFFICIENT TO ENABLE THE SURVEY TO BE RETRACED. MADE FOR THE DEPARTMENT OF TRANSPORTATION, STATE OF ILLINOIS.

DATED AT SHOREWOOD, ILLINOIS THIS 28TH DAY OF JANUARY 2025 A.D.

ILLINOIS PROFESSIONAL LAND SURVEYOR NO. 3425
LICENSE EXPIRATION DATE: 11-30-2026

THIS PROFESSIONAL SERVICE CONFORMS TO THE CURRENT ILLINOIS MINIMUM STANDARDS FOR A BOUNDARY SURVEY.

KENNETH J. PESAVENTO 3425 PROFESSIONAL LAND SURVEYOR STATE OF ILLINOIS SHOREWOOD, ILLINOIS

Ruettiger, Tonelli & Associates, Inc.
Surveyors • Engineers • Planners • Landscape Architects • G.I.S. Consultants
129 CAPITOL DRIVE - SHOREWOOD, ILLINOIS 60404
PH. (815) 744-4600 FAX (815) 744-4181
website: www.ruettigertonelli.com

R.T. & A. Dwg. No.: 2020-0163.00

PLAT OF HIGHWAYS
STATE OF ILLINOIS
DEPARTMENT OF TRANSPORTATION
ILLINOIS ROUTE 47

LIMITS: IL 120 TO US 14 — COUNTY: McHENRY
SECTION: — JOB NO.: R-91-019-17
STA. N/A — TO STA. N/A
SCALE: N/A — SHEET 12 OF 57 SHEETS

IDOT USE ONLY

BUREAU OF LAND ACQUISITION
201 WEST CENTER COURT
SCHAUMBURG, ILLINOIS 60196

REVISION DATE: / / REVISION MADE BY:

FOR REFERENCE ONLY - N.T.S.

MODEL: Default
FILE NAME: pw:\\aecom-na-pw.bentley.com:AECOM DS21_NA_2020\Documents\60632011-IL-471900-CADD\10_CADD\03_SHEETS\General\D160X17-sht-PLAT.dgn

AECOM
303 EAST WACKER DRIVE, SUITE 1400
CHICAGO, IL 60601-5276
PHONE: (312) 373-7700 FAX: (312) 373-6800

USER NAME = muniza	DESIGNED -	REVISED -
	DRAWN -	REVISED -
PLOT SCALE = 100.0000 ' / In.	CHECKED -	REVISED -
PLOT DATE = 2/7/2025	DATE -	REVISED -

STATE OF ILLINOIS
DEPARTMENT OF TRANSPORTATION

SCALE: | SHEET OF SHEETS | STA. TO STA.

F.A.P. RTE.	SECTION	COUNTY	TOTAL SHEETS	SHEET NO.
326	2024-1052-N,C,SW,FL	MCHENRY	941	603
		CONTRACT NO. 62X94		
	ILLINOIS FED. AID PROJECT			

PART OF SW 1/4 OF NW 1/4 OF SECTION 9 TWP.44N., R.7E. OF THE 3RD. P.M., IN McHENRY COUNTY, ILLINOIS.

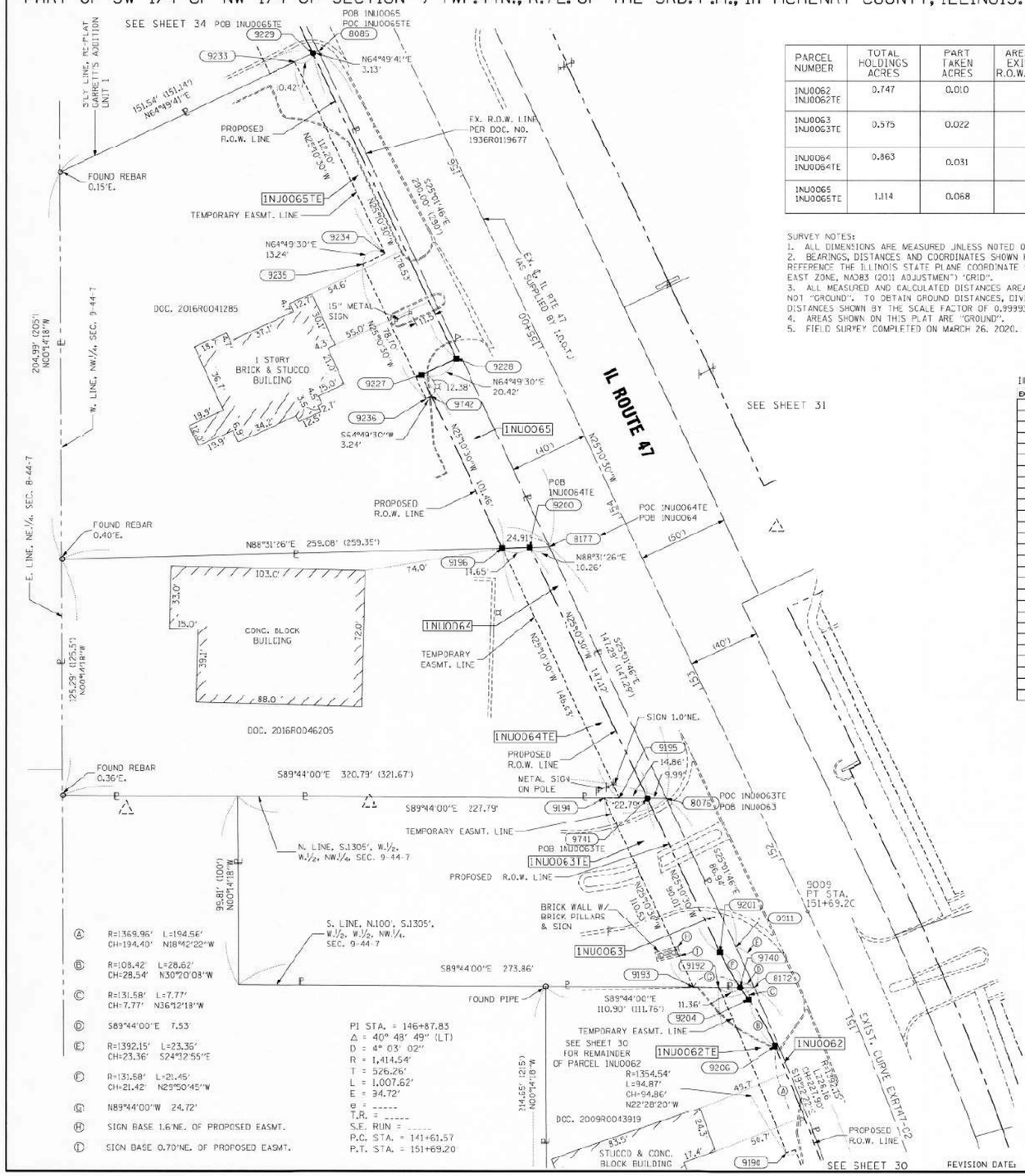

PARCEL NUMBER	TOTAL HOLDINGS ACRES	PART TAKEN ACRES	AREA IN EXISTING R.O.W. ACRES	REMAINDER AREA ACRES	EASEMENT AREA ACRES	EASEMENT AREA SQUARE FEET	PARCEL INDEX NUMBER
1NJ0062 1NJ0062TE	0.747	0.010		0.737	0.064		13-09-151-002
1NJ0063 1NJ0063TE	0.575	0.022		0.553	0.052		13-09-151-025
1NJ0064 1NJ0064TE	0.863	0.031		0.832	0.045		13-09-151-020
1NJ0065 1NJ0065TE	1.114	0.068		1.046	0.064		13-09-151-019

SURVEY NOTES:
1. ALL DIMENSIONS ARE MEASURED UNLESS NOTED OTHERWISE.
2. BEARINGS, DISTANCES AND COORDINATES SHOWN HEREON REFERENCE THE ILLINOIS STATE PLANE COORDINATE SYSTEM, EAST ZONE, NAD83 (2011 ADJUSTMENT) 'GRID'.
3. ALL MEASURED AND CALCULATED DISTANCES AREA "GRID" NOT "GROUND". TO OBTAIN GROUND DISTANCES, DIVIDE GRID DISTANCES SHOWN BY THE SCALE FACTOR OF 0.99993761.
4. AREAS SHOWN ON THIS PLAT ARE "GROUND".
5. FIELD SURVEY COMPLETED ON MARCH 26, 2020.

PROJECT COORDINATES
Illinois State Plane, East Zone, NAD83 (2011)

EXISTING CENTERLINE, IL ROUTE 47

PT#	STATION	OFFSET	NORTH	EAST
8075	152+54.91	-42.57	2055254.884	957520.452
8085	156+92.20	-41.45	2055651.109	957335.443
8177	154+02.20	-42.19	2055388.342	957458.136
8911	151+67.94	-42.79	2055176.130	957557.335
9000	151+69.20	0.00	2055195.427	957505.437
9190	150+52.92	-60.00	2055067.293	957584.338
9192	151+52.00	-60.00	2055154.946	957548.051
9193	151+57.89	-72.12	2055155.008	957534.695
9194	152+68.99	-72.16	2055255.037	957487.677
9195	152+65.59	-65.00	2055255.000	957495.638
9196	154+12.72	-65.00	2055387.701	957433.235
9200	154+86.33	-51.58	2055388.078	957447.883
9201	151+69.20	-51.58	2055173.474	957548.753
9204	151+39.20	-48.04	2055148.623	957564.004
9206	151+09.92	-44.58	2055123.995	957578.416
9227	155+13.57	-65.00	2055479.520	957350.076
9228	155+13.57	-44.58	2055488.205	957408.554
9229	156+92.20	-44.58	2055649.777	957332.610
9233	156+92.20	55.00	2055645.347	957323.182
9234	155+80.00	-55.00	2055543.803	957370.911
9235	155+80.00	-68.24	2055538.172	957358.931
9236	155+01.30	-68.24	2055466.944	957302.411
9740	151+47.97	-49.67	2055154.893	957559.414
9741	152+59.20	-51.58	2055254.931	957510.466
9742	155+01.30	-65.00	2055468.321	957395.340

LEGEND

SECTION CORNER
QUARTER SECTION CORNER
GRAPHIC SCALE FEET
SCALE: 1"=30'

- SECTION / QUARTER SECTION LINE
- PLATTED LOT LINES
- P — PROPERTY (DEED) LINE
- APL — APPARENT PROPERTY LINE
- EXISTING CENTERLINE
- PROPOSED CENTERLINE
- EXISTING RIGHT OF WAY LINE
- PROPOSED RIGHT OF WAY LINE
- EXISTING EASEMENT
- PROPOSED EASEMENT
- AC — EXISTING ACCESS CONTROL LINE
- AC — PROPOSED ACCESS CONTROL LINE
- 129.32' — MEASURED DIMENSION
- 129.32' (COMP) — COMPUTED DIMENSION
- (129.32') — RECORDED DIMENSION
- EXISTING BUILDING

BEARINGS ARE REFERENCED TO THE ILLINOIS STATE PLANE COORDINATE SYSTEM, NAD83 (2011 ADJUSTMENT), EAST ZONE.

- ○ IRON PIPE OR ROD FOUND
- + CUT CROSS FOUND OR SET
- ⊕ "MAG" NAIL SET
- ● 5/8" REBAR SET
- ■ STAKING OF PROPOSED RIGHT OF WAY, SET DIVISION OF HIGHWAYS SURVEY MARKER TO MONUMENT THE POSITION SHOWN. IDENTIFIED BY INSCRIPTION DATA AND SURVEYORS REGISTRATION NUMBER.
- ■ M STAKING OF PROPOSED RIGHT OF WAY IN CULTIVATED AREAS. BURIED 5/8 INCH METAL ROD 20 INCHES BELOW GROUND TO MARK FUTURE SURVEY MARKER POSITION IDENTIFIED BY COLORED PLASTIC CAP BEARING SURVEYORS REGISTRATION NUMBER.
- ◔ PERMANENT SURVEY MARKER, I.D.O.T. STANDARD 667101-02 (TO BE SET BY OTHERS)
- □ RIGHT OF WAY STAKING PROPOSED TO BE SET

STATE OF ILLINOIS)
)SS
COUNTY OF WILL)

THIS IS TO CERTIFY THAT I, KENNETH J. PESAVENTO, AN ILLINOIS PROFESSIONAL LAND SURVEYOR, (WE, RUETTIGER, TONELLI & ASSOCIATES, AN ILLINOIS PROFESSIONAL DESIGN FIRM LAND SURVEYING CORPORATION, NUMBER 184-001251,) HAVE SURVEYED THE PLAT OF HIGHWAYS SHOWN HEREON IN SECTION 9, TOWNSHIP 44 NORTH, RANGE 7 EAST OF THE THIRD PRINCIPAL MERIDIAN, MCHENRY COUNTY, THAT THE SURVEY IS TRUE AND COMPLETE AS SHOWN TO THE BEST OF MY KNOWLEDGE AND BELIEF, THAT THE PLAT CORRECTLY REPRESENTS SAID SURVEY, THAT ALL MONUMENTS FOUND AND ESTABLISHED ARE OF PERMANENT QUALITY AND OCCUPY THE POSITIONS SHOWN THEREON AND THAT THE MONUMENTS ARE SUFFICIENT TO ENABLE THE SURVEY TO BE RETRACED, MADE FOR THE DEPARTMENT OF TRANSPORTATION, STATE OF ILLINOIS.

DATED AT SHOREWOOD, ILLINOIS THIS 28TH DAY OF JANUARY 2025 A.D.

ILLINOIS PROFESSIONAL LAND SURVEYOR NO. 3425
LICENSE EXPIRATION DATE: 11-30-2026

THIS PROFESSIONAL SERVICE CONFORMS TO THE CURRENT ILLINOIS MINIMUM STANDARDS FOR A BOUNDARY SURVEY.

KENNETH J. PESAVENTO 3425 PROFESSIONAL LAND SURVEYOR STATE OF ILLINOIS SHOREWOOD, ILLINOIS

Ruettiger, Tonelli & Associates, Inc.
Surveyors • Engineers • Planners • Landscape Architects • G.I.S. Consultants
129 CASTLEGROVE - SHOREWOOD, ILLINOIS 60404
PH: (815) 744-6600 FAX: (815) 744-6101
website: www.ruettigertonelli.com

R.T. & A. Dwg. No.: 2020-0163.00

PLAT OF HIGHWAYS
STATE OF ILLINOIS
DEPARTMENT OF TRANSPORTATION
ILLINOIS ROUTE 47

LIMITS: IL 120 TO US 14 — COUNTY: McHENRY
SECTION: — JOB NO.: R-91-019-17
STA. 150+52.92 TO STA. 156+92.20
SCALE: 1"=30' — SHEET 33 OF 57 SHEETS

BUREAU OF LAND ACQUISITION
201 WEST CENTER COURT
SCHAUMBURG, ILLINOIS 60196

IDOT USE ONLY

REVISION DATE: / / REVISION MADE BY:

FOR REFERENCE ONLY - N.T.S.

MODEL: Default
FILE NAME: pw:\\aecom-na-pw.bentley.com:AECOM_D521_NA_2020\Documents\60632011-IL-47900-CAD910_CAD03_SHEETS\General\D160X17-sht-PLAT.dgn

AECOM
303 EAST WACKER DRIVE, SUITE 1400
CHICAGO, IL 60601-5276
PHONE: (312) 373-7700 FAX: (312) 373-6800

USER NAME = muniza	DESIGNED -	REVISED -
	DRAWN -	REVISED -
PLOT SCALE = 100.0000 ' / In.	CHECKED -	REVISED -
PLOT DATE = 2/7/2025	DATE -	REVISED -

STATE OF ILLINOIS
DEPARTMENT OF TRANSPORTATION

SCALE: | SHEET OF SHEETS | STA. TO STA.

F.A.P. RTE.	SECTION	COUNTY	TOTAL SHEETS	SHEET NO.
326	2024-1052-N,C,SW,FL	MCHENRY	941	604
		CONTRACT NO. 62X94		
		ILLINOIS	FED. AID PROJECT	

PART OF THE NE 1/4 OF SECTION 8 AND NW 1/4 OF SECTION 9, ALL IN TWP. 44N., R.7E. OF THE 3RD. P.M., IN McHENRY COUNTY, ILLINOIS.

PROJECT COORDINATES
Illinois State Plane, East Zone, NAD83 (2011)
EXISTING CENTERLINE, IL ROUTE 47

PTI	STATION	OFFSET	NORTH	EAST
334	161+17.95	-34.77	2056033.255	957150.380
8081	160+00.58	-49.61	2055926.720	957136.879
8084	160+19.92	-40.62	2055948.053	957136.790
8085	156+92.20	-41.45	2055651.199	957385.443
9229	156+92.20	-44.58	2055649.777	957382.610
9232	156+92.20	-70.00	2055638.967	957359.606
9237	157+55.00	-70.00	2055695.799	957282.893
9238	157+55.00	-55.00	2055702.180	957296.468
9239	160+03.12	-55.00	2055926.730	957190.922
9243	160+11.40	-44.58	2055938.651	957136.829

PARCEL NUMBER	TOTAL HOLDINGS ACRES	PART TAKEN ACRES	AREA IN EXISTING R.O.W. ACRES	REMAINDER AREA ACRES	EASEMENT AREA ACRES	EASEMENT AREA SQUARE FEET	PARCEL INDEX NUMBER
1NU0066 1NU0066TE	10.462	0.026		10.436	0.098		13-08-235-009 13-08-235-008 13-08-235-004 13-08-235-006 13-08-235-007

SURVEY NOTES:
1. ALL DIMENSIONS ARE MEASURED UNLESS NOTED OTHERWISE.
2. BEARINGS, DISTANCES AND COORDINATES SHOWN HEREON REFERENCE THE ILLINOIS STATE PLANE COORDINATE SYSTEM, EAST ZONE, NAD83 (2011 ADJUSTMENT) GRID.
3. ALL MEASURED AND CALCULATED DISTANCES ARE "GRID" NOT "GROUND". TO OBTAIN GROUND DISTANCES, DIVIDE GRID DISTANCES SHOWN BY THE SCALE FACTOR OF 0.99993781.
4. AREAS SHOWN ON THIS PLAT ARE "GROUND".
5. FIELD SURVEY COMPLETED ON MARCH 26, 2020.

LEGEND

- SECTION CORNER
- 1/4 SECTION CORNER
- SECTION / QUARTER SECTION LINE
- PLATTED LOT LINES
- P — PROPERTY (DEED) LINE
- APL — APPARENT PROPERTY LINE
- EXISTING CENTERLINE
- PROPOSED CENTERLINE
- EXISTING RIGHT OF WAY LINE
- PROPOSED RIGHT OF WAY LINE
- EXISTING EASEMENT
- PROPOSED EASEMENT
- AC — EXISTING ACCESS CONTROL LINE
- AC — PROPOSED ACCESS CONTROL LINE
- 129.29' MEASURED DIMENSION
- 129.32' (COMP) COMPUTED DIMENSION
- (129.29') RECORDED DIMENSION
- EXISTING BUILDING

GRAPHIC SCALE FEET
0 30
SCALE: 1"=30'

BEARINGS ARE REFERENCED TO THE ILLINOIS STATE PLANE COORDINATE SYSTEM, NAD83 (2011 ADJUSTMENT), EAST ZONE.

- ○ IRON PIPE OR ROD FOUND
- + CUT CROSS FOUND OR SET
- ⊕ "MAG" NAIL SET
- ● 5/8" REBAR SET
- ■ STAKING OF PROPOSED RIGHT OF WAY. SET DIVISION OF HIGHWAYS SURVEY MARKER TO MONUMENT THE POSITION SHOWN. IDENTIFIED BY INSCRIPTION DATA AND SURVEYORS REGISTRATION NUMBER.
- ■ M STAKING OF PROPOSED RIGHT OF WAY IN CULTIVATED AREAS. BURIED 5/8 INCH METAL ROD 20 INCHES BELOW GROUND TO MARK FUTURE SURVEY MARKER POSITION IDENTIFIED BY COLORED PLASTIC CAP BEARING SURVEYORS REGISTRATION NUMBER.
- ◔ PERMANENT SURVEY MARKER, I.D.O.T. STANDARD 667101-02 (TO BE SET BY OTHERS)
- □ RIGHT OF WAY STAKING PROPOSED TO BE SET

TOTAL HOLDING DIAGRAM OF PARCEL 1NU0066
SCALE: 1"=100'

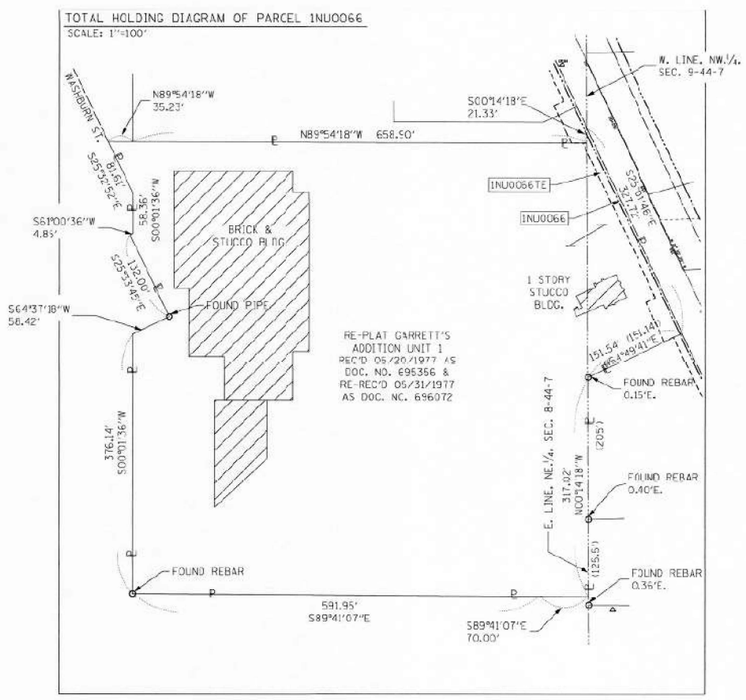

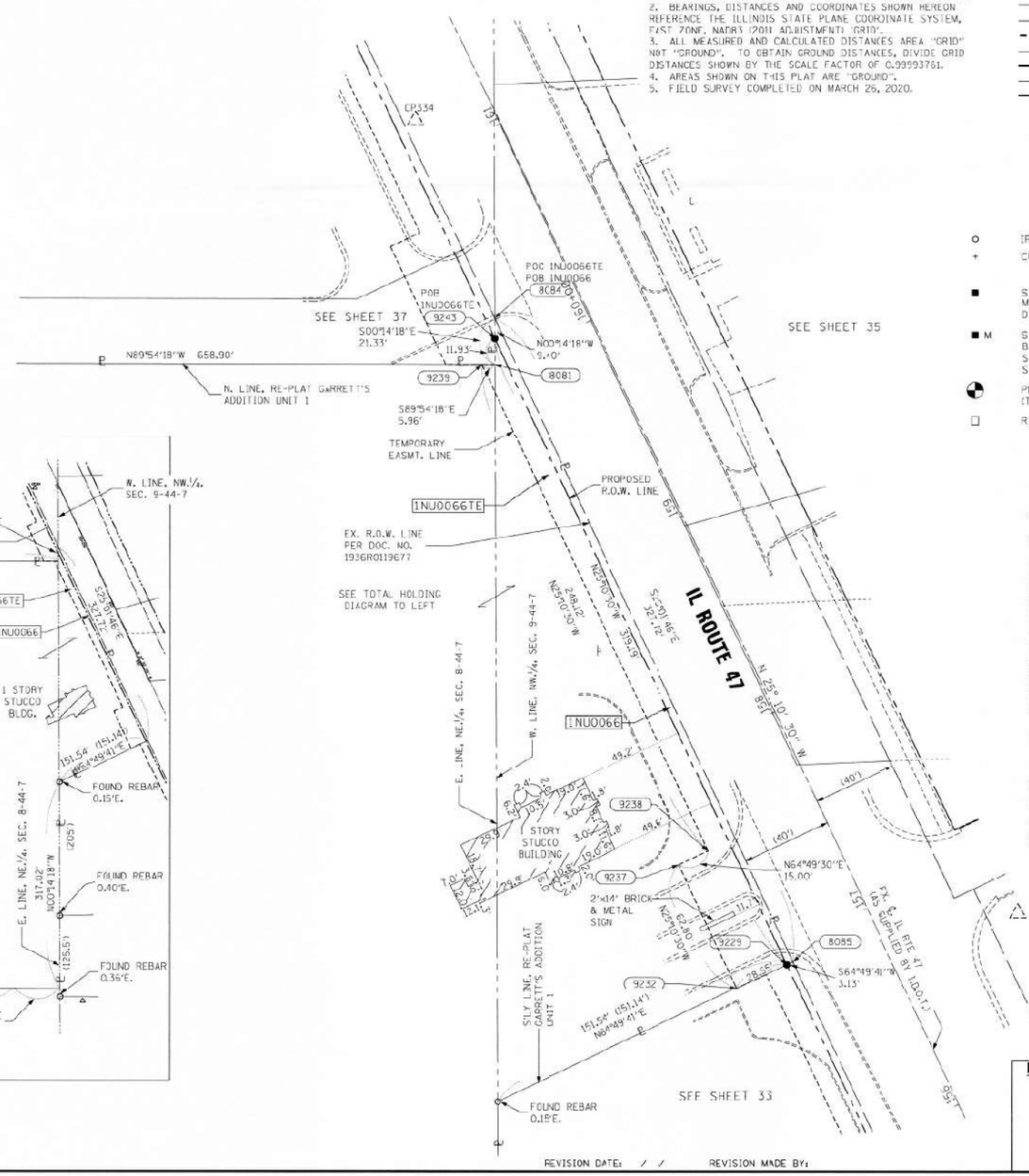

STATE OF ILLINOIS)
) SS
COUNTY OF WILL)

THIS IS TO CERTIFY THAT I, KENNETH J. PESAVENTO, AN ILLINOIS PROFESSIONAL LAND SURVEYOR, (WE, RUETTIGER, TONELLI & ASSOCIATES, AN ILLINOIS PROFESSIONAL DESIGN FIRM LAND SURVEYING CORPORATION, NUMBER 184-001251,) HAVE SURVEYED THE PLAT OF HIGHWAYS SHOWN HEREON IN SECTIONS 8 & 9, TOWNSHIP 44 NORTH, RANGE 7 EAST OF THE THIRD PRINCIPAL MERIDIAN, McHENRY COUNTY, THAT THE SURVEY IS TRUE AND COMPLETE AS SHOWN TO THE BEST OF MY KNOWLEDGE AND BELIEF, THAT THE PLAT CORRECTLY REPRESENTS SAID SURVEY, THAT ALL MONUMENTS FOUND AND ESTABLISHED ARE OF PERMANENT QUALITY AND OCCUPY THE POSITIONS SHOWN THEREON AND THAT THE MONUMENTS ARE SUFFICIENT TO ENABLE THE SURVEY TO BE RETRACED, MADE FOR THE DEPARTMENT OF TRANSPORTATION, STATE OF ILLINOIS.

DATED AT SHOREWOOD, ILLINOIS THIS 28TH DAY OF JANUARY 2025 A.D.

ILLINOIS PROFESSIONAL LAND SURVEYOR NO. 3425
LICENSE EXPIRATION DATE: 11-30-2026

THIS PROFESSIONAL SERVICE CONFORMS TO THE CURRENT ILLINOIS MINIMUM STANDARDS FOR A BOUNDARY SURVEY.

KENNETH J. PESAVENTO 3425 PROFESSIONAL LAND SURVEYOR STATE OF ILLINOIS SHOREWOOD, ILLINOIS

Ruettiger, Tonelli & Associates, Inc.
Surveyors • Engineers • Planners • Landscape Architects • G.I.S. Consultants
129 CAPITOL DRIVE - SHOREWOOD, ILLINOIS 60404
PH: (815) 744-6600 FAX: (815) 744-6161
website: www.rttassociates.com

R.T. & A. Dwg. No.: 2020-0163.00

PLAT OF HIGHWAYS
STATE OF ILLINOIS
DEPARTMENT OF TRANSPORTATION
ILLINOIS ROUTE 47

LIMITS: IL 120 TO US 14 — COUNTY: McHENRY
SECTION: — JOB NO.: R-91-019-17
STA. 156+92.20 TO STA. 160+19.92
SCALE: 1"=30' — SHEET 34 OF 67 SHEETS

IDOT USE ONLY

BUREAU OF LAND ACQUISITION
201 WEST CENTER COURT
SCHAUMBURG, ILLINOIS 60196

REVISION DATE: / / REVISION MADE BY:

FOR REFERENCE ONLY - N.T.S.

AECOM
303 EAST WACKER DRIVE, SUITE 1400
CHICAGO, IL 60601-5276
PHONE: (312) 373-7700 FAX: (312) 373-6800

USER NAME = muniza	DESIGNED -	REVISED -
	DRAWN -	REVISED -
PLOT SCALE = 100.0000 ' / in.	CHECKED -	REVISED -
PLOT DATE = 2/7/2025	DATE -	REVISED -

STATE OF ILLINOIS
DEPARTMENT OF TRANSPORTATION

SCALE: | SHEET OF SHEETS | STA. TO STA.

F.A.P. RTE.	SECTION	COUNTY	TOTAL SHEETS	SHEET NO.
326	2024-1052-N,C,SW,FL	MCHENRY	941	605
		CONTRACT NO. 62X94		
		ILLINOIS	FED. AID PROJECT	

MODEL: Default
FILE NAME: pw:\\aecom-na-pw.bentley.com:AECOM_D521_NA_2020\Documents\60632011-IL-47900-CAD910_CAD03_SHEETS\General\D160X17-sht-PLAT.dgn

PART OF NW 1/4 OF SECTION 9 TWP.44N., R.7E. OF THE 3RD. P.M., IN McHENRY COUNTY, ILLINOIS.

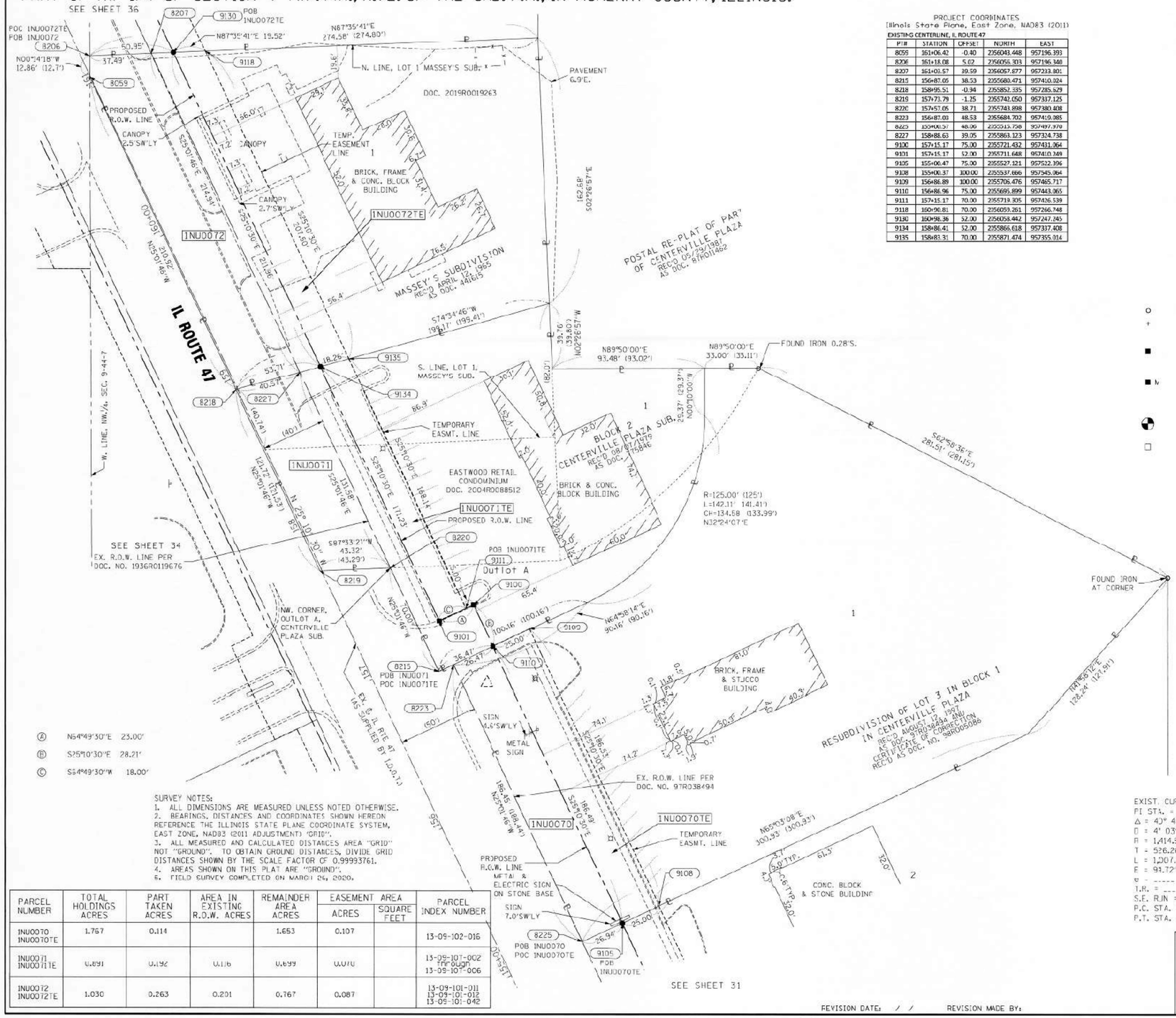

PROJECT COORDINATES
(Illinois State Plane, East Zone, NAD83 (2011)
EXISTING CENTERLINE, IL ROUTE 47

P.I.#	STATION	OFFSET	NORTH	EAST
8059	161+06.42	-0.40	2056043.448	957196.393
8206	161+18.08	5.02	2056055.303	957196.348
8207	161+01.57	39.59	2056057.877	957233.801
8215	156+87.05	38.53	2055680.471	957410.024
8218	158+95.51	-0.94	2055852.335	957285.529
8219	157+73.79	-1.25	2055742.050	957337.125
8220	157+57.05	38.71	2055741.898	957380.408
8223	156+87.03	48.53	2055684.702	957410.985
8225	155+00.57	48.06	2055513.798	957497.979
8227	158+88.63	39.05	2055863.123	957324.738
9100	157+15.17	75.00	2055721.432	957431.064
9101	157+15.17	52.00	2055711.648	957410.249
9105	155+00.47	75.00	2055527.121	957522.396
9108	155+00.37	100.00	2055537.666	957545.364
9109	156+86.89	100.00	2055706.476	957465.717
9110	156+86.96	75.00	2055695.699	957443.065
9111	157+15.17	70.00	2055719.305	957426.539
9118	160+90.81	70.00	2056059.261	957266.748
9130	160+98.36	52.00	2056058.442	957247.745
9134	158+86.41	52.00	2055866.618	957337.408
9135	158+83.31	70.00	2055871.474	957355.014

LEGEND

SECTION CORNER
QUARTER SECTION CORNER
SECTION / QUARTER SECTION LINE
PLATTED LOT LINES
P PROPERTY (DEED) LINE
APL APPARENT PROPERTY LINE
EXISTING CENTERLINE
PROPOSED CENTERLINE
EXISTING RIGHT OF WAY LINE
PROPOSED RIGHT OF WAY LINE
EXISTING EASEMENT
PROPOSED EASEMENT
AC EXISTING ACCESS CONTROL LINE
AC PROPOSED ACCESS CONTROL LINE
129.22' MEASURED DIMENSION
129.32' (COMP) COMPUTED DIMENSION
(129.22') RECORDED DIMENSION
EXISTING BUILDING

N
GRAPHIC SCALE FEET
SCALE: 1"=30'

BEARINGS ARE REFERENCED TO THE ILLINOIS STATE PLANE COORDINATE SYSTEM, NAD83 (2011 ADJUSTMENT), EAST ZONE.

○ IRON PIPE OR ROD FOUND ⊕ "MAG" NAIL SET
+ CUT CROSS FOUND OR SET ● 5/8"REBAR SET

■ STAKING OF PROPOSED RIGHT OF WAY. SET DIVISION OF HIGHWAYS SURVEY MARKER TO MONUMENT THE POSITION SHOWN. IDENTIFIED BY INSCRIPTION DATA AND SURVEYORS REGISTRATION NUMBER.

■ N STAKING OF PROPOSED RIGHT OF WAY IN CULTIVATED AREAS. BURIED 5/8 INCH METAL ROD 20 INCHES BELOW GROUND TO MARK FUTURE SURVEY MARKER POSITION IDENTIFIED BY COLORED PLASTIC CAP BEARING SURVEYORS REGISTRATION NUMBER.

PERMANENT SURVEY MARKER, I.D.O.T. STANDARD 667101-02 (TO BE SET BY OTHERS)

□ RIGHT OF WAY STAKING PROPOSED TO BE SET

SURVEY NOTES:
1. ALL DIMENSIONS ARE MEASURED UNLESS NOTED OTHERWISE.
2. BEARINGS, DISTANCES AND COORDINATES SHOWN HEREON REFERENCE THE ILLINOIS STATE PLANE COORDINATE SYSTEM, EAST ZONE, NAD83 (2011 ADJUSTMENT) "GRID".
3. ALL MEASURED AND CALCULATED DISTANCES AREA "GRID" NOT "GROUND". TO OBTAIN GROUND DISTANCES, DIVIDE GRID DISTANCES SHOWN BY THE SCALE FACTOR OF 0.99993761.
4. AREAS SHOWN ON THIS PLAT ARE "GROUND".
5. FIELD SURVEY COMPLETED ON MARCH 24, 2020.

PARCEL NUMBER	TOTAL HOLDINGS ACRES	PART TAKEN ACRES	AREA IN EXISTING R.O.W. ACRES	REMAINDER AREA ACRES	EASEMENT AREA ACRES	EASEMENT AREA SQUARE FEET	PARCEL INDEX NUMBER
INU0070 INU0070TE	1.767	0.114		1.653	0.107		13-09-102-016
INU0071 INU0071TE	0.891	0.192	0.116	0.699	0.076		13-09-107-002 through 13-09-107-006
INU0072 INU0072TE	1.030	0.263	0.201	0.767	0.087		13-09-101-011 13-09-101-012 13-09-101-042

EXIST. CURVE EXRT47-C2
PI STA. = 146+87.83
Δ = 4° 48' 49" (LT)
D = 4° 03' 02"
R = 1,414.54'
T = 526.26'
L = 1,207.62'
E = 98.72'
e = -----
I.R. = -----
S.E. RUN = -----
P.C. STA. = 141+61.57
P.T. STA. = 151+69.20

IDOT USE ONLY

STATE OF ILLINOIS)
)SS
COUNTY OF WILL)

THIS IS TO CERTIFY THAT I, KENNETH J. PESAVENTO, AN ILLINOIS PROFESSIONAL LAND SURVEYOR, (WE, RUETTIGER, TONELLI & ASSOCIATES, AN ILLINOIS PROFESSIONAL DESIGN FIRM LAND SURVEYING CORPORATION, NUMBER 184-001251,) HAVE SURVEYED THE PLAT OF HIGHWAYS SHOWN HEREON IN SECTION 9, TOWNSHIP 44 NORTH, RANGE 7 EAST OF THE THIRD PRINCIPAL MERIDIAN, McHENRY COUNTY, THAT THE SURVEY IS TRUE AND COMPLETE AS SHOWN TO THE BEST OF MY KNOWLEDGE AND BELIEF, THAT THE PLAT CORRECTLY REPRESENTS SAID SURVEY, THAT ALL MONUMENTS FOUND AND ESTABLISHED ARE OF PERMANENT QUALITY AND OCCUPY THE POSITIONS SHOWN THEREON AND THAT THE MONUMENTS ARE SUFFICIENT TO ENABLE THE SURVEY TO BE RETRACED. MADE FOR THE DEPARTMENT OF TRANSPORTATION, STATE OF ILLINOIS.

DATED AT SHOREWOOD, ILLINOIS THIS 28TH DAY OF JANUARY 2025 A.D.

ILLINOIS PROFESSIONAL LAND SURVEYOR NO. 3425
LICENSE EXPIRATION DATE: 11-30-2026

THIS PROFESSIONAL SERVICE CONFORMS TO THE CURRENT ILLINOIS MINIMUM STANDARDS FOR A BOUNDARY SURVEY.

KENNETH J. PESAVENTO 3425 PROFESSIONAL LAND SURVEYOR STATE OF ILLINOIS SHOREWOOD, ILLINOIS

Ruettiger, Tonelli & Associates, Inc.
Surveyors • Engineers • Planners • Landscape Architects • G.I.S. consultants
129 CAPITAL DRIVE • SHOREWOOD, ILLINOIS 60404
PH. 815.744.6600 FAX (815) 744.6101
website: www.ruettigertonelli.com

R.T. & A. Dwg. No.: 2020-0163.00

PLAT OF HIGHWAYS
STATE OF ILLINOIS
DEPARTMENT OF TRANSPORTATION
ILLINOIS ROUTE 47

LIMITS: IL 120 TO US 14 COUNTY: McHENRY
SECTION: JOB NO.: R-9-019-17
STA. 155+00.57 TO STA. 161+18.08
SCALE: 1"=30' SHEET 35 OF 57 SHEETS

BUREAU OF LAND ACQUISITION
201 WEST CENTER COURT
SCHAUMBURG, ILLINOIS 60196

REVISION DATE: / / REVISION MADE BY:

FOR REFERENCE ONLY - N.T.S.

AECOM
303 EAST WACKER DRIVE, SUITE 1400
CHICAGO, IL 60601-5276
PHONE: (312) 373-7700 FAX: (312) 373-6800

USER NAME = muniza	DESIGNED -	REVISED -	
	DRAWN -	REVISED -	
PLOT SCALE = 100.0000 ' / in.	CHECKED -	REVISED -	
PLOT DATE = 2/7/2025	DATE -	REVISED -	

STATE OF ILLINOIS
DEPARTMENT OF TRANSPORTATION

SCALE: SHEET OF SHEETS STA. TO STA.

F.A.P. RTE.	SECTION	COUNTY	TOTAL SHEETS	SHEET NO.
326	2024-1052-N,C,SW,FL	MCHENRY	941	606
		CONTRACT NO. 62X94		
	ILLINOIS FED. AID PROJECT			

MODEL: Default
FILE NAME: pw:\\aecom-na-pw.bentley.com:AECOM_DS21_NA_2020\Documents\60632011-IL-47900-CAD\910_CAD\03_SHEETS\General\D160X17-sht-PLAT.dgn

PART OF NE 1/4 OF SECTION 8 AND PART OF NW 1/4 OF SECTION 9, ALL IN TWP. 44N., R. 7ØE. OF THE 3RD. P.M., IN McHENRY COUNTY, ILLINOIS.

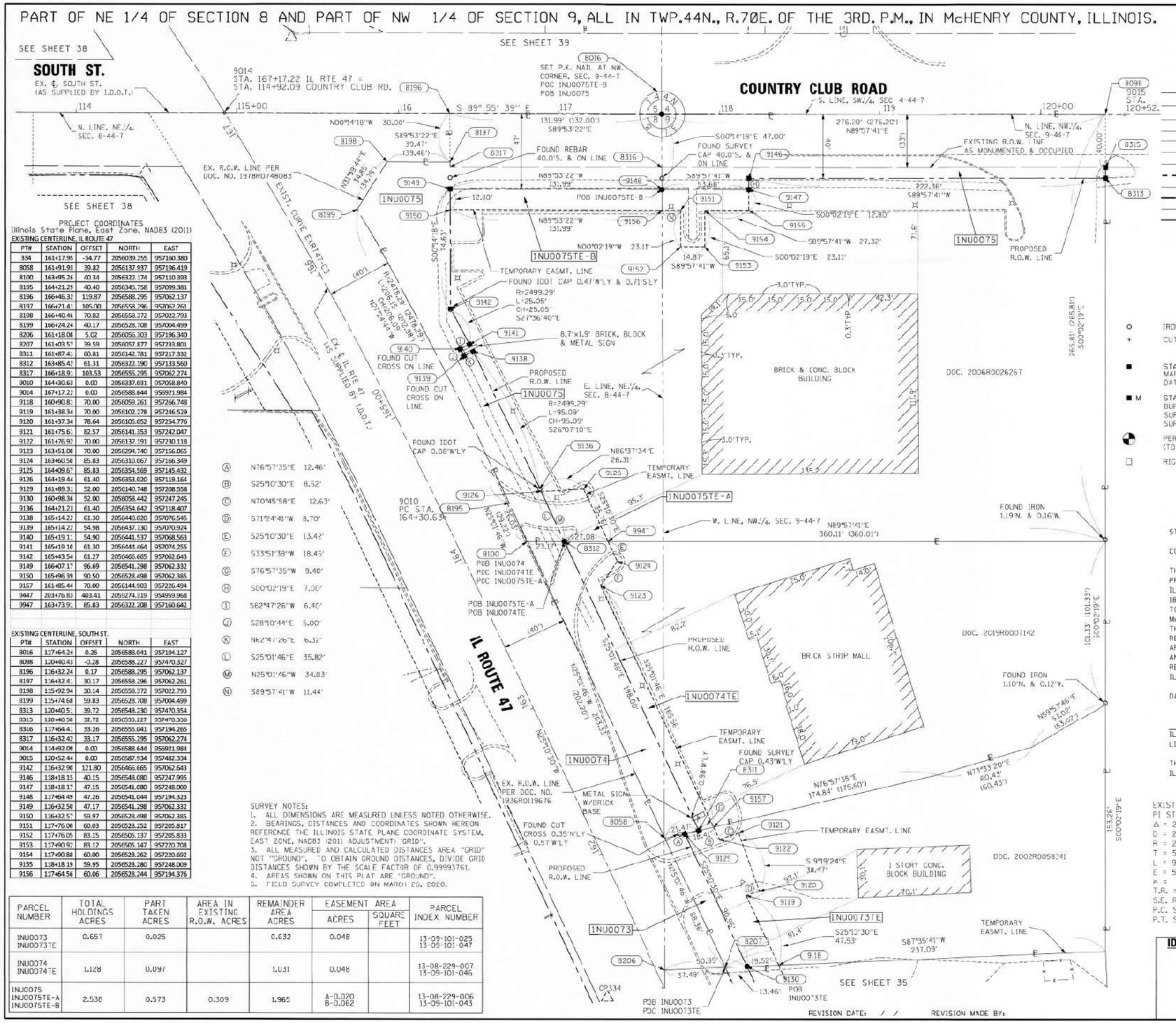

PROJECT COORDINATES
Illinois State Plane, East Zone, NAD83 (2011)

EXISTING CENTERLINE, ILLINOIS ROUTE 47

PT#	STATION	OFFSET	NORTH	EAST
334	161+17.95	-34.77	2056039.255	957160.380
8058	161+91.91	39.82	2056137.937	957196.419
8100	163+85.26	40.34	2056322.174	957110.393
8195	164+21.21	40.40	2056345.758	957099.381
8196	166+46.31	119.87	2056588.295	957062.137
8197	166+21.41	105.00	2056558.296	957062.261
8198	166+40.44	70.82	2056558.372	957022.793
8199	166+24.24	40.17	2056528.708	957004.499
8206	161+18.01	5.02	2056056.303	957196.340
8207	161+03.51	39.59	2056057.877	957233.801
8311	161+87.41	60.81	2056142.781	957217.332
8312	163+85.41	61.31	2056322.190	957133.560
8317	166+18.91	103.53	2056555.295	957062.274
9010	164+30.61	0.00	2056337.031	957058.840
9014	167+17.21	0.00	2056588.644	956921.984
9118	160+90.81	70.00	2056059.261	957266.748
9119	161+38.34	70.00	2056102.278	957246.529
9120	161+37.34	78.64	2056105.052	957254.775
9121	161+75.61	82.57	2056141.353	957242.047
9122	161+76.91	70.00	2056137.191	957230.118
9123	163+51.06	70.00	2056294.740	957156.065
9124	163+60.56	85.83	2056310.067	957166.349
9125	164+09.61	85.83	2056354.569	957145.432
9126	164+19.44	61.40	2056353.620	957119.164
9129	161+89.31	52.00	2056140.748	957208.558
9130	160+98.34	52.00	2056058.442	957247.245
9136	164+21.21	61.40	2056354.642	957118.407
9138	165+14.21	61.30	2056440.020	957076.545
9139	165+14.21	54.98	2056437.130	957070.924
9140	165+19.11	54.90	2056441.537	957068.563
9141	165+19.16	61.30	2056444.464	957074.255
9142	165+43.54	61.27	2056466.665	957062.643
9149	166+07.11	96.69	2056541.298	957062.332
9150	165+96.39	90.50	2056528.498	957062.385
9157	161+85.44	70.00	2056144.903	957226.494
9447	203+76.81	403.41	2059274.119	954959.968
9947	163+73.91	85.83	2056322.208	957160.642

EXISTING CENTERLINE, SOUTH ST.

PT#	STATION	OFFSET	NORTH	EAST
8016	117+64.24	0.26	2056588.041	957194.127
8098	120+40.43	-0.28	2056588.227	957470.327
8196	116+32.24	0.17	2056588.295	957062.137
8197	116+32.41	30.17	2056558.296	957062.261
8198	115+92.94	30.14	2056558.372	957022.793
8199	115+74.68	59.83	2056528.708	957004.499
8313	120+40.51	39.72	2056548.230	957470.354
0315	120+40.56	32.72	2056555.227	957470.350
8316	117+64.4	33.26	2056555.041	957194.265
8317	116+32.41	33.17	2056555.295	957062.274
9014	114+92.09	0.00	2056588.644	956921.984
9015	120+52.44	0.00	2056587.934	957482.334
9142	116+32.96	121.80	2056466.665	957062.643
9146	118+18.15	40.15	2056548.080	957247.995
9147	118+18.17	47.15	2056541.080	957248.000
9148	117+64.43	47.26	2056541.044	957194.323
9149	116+32.58	47.17	2056541.298	957062.332
9150	116+32.57	59.97	2056528.498	957062.385
9151	117+76.06	60.03	2056528.252	957205.817
9152	117+76.05	83.15	2056505.137	957205.833
9153	117+90.92	83.12	2056505.147	957220.708
9154	117+90.88	60.00	2056528.262	957220.692
9155	118+18.19	59.95	2056528.280	957248.009
9156	117+64.56	60.06	2056528.244	957194.375

Ⓐ	N76°57'35"E	12.46'
Ⓑ	S25°10'30"E	8.52'
Ⓒ	N70°45'58"E	12.63'
Ⓓ	S71°24'41"W	8.70'
Ⓔ	S25°10'30"E	13.42'
Ⓕ	S33°51'38"W	18.45'
Ⓖ	S76°57'35"W	9.46'
Ⓗ	S00°02'19"E	7.00'
Ⓘ	S62°47'26"W	6.40'
Ⓙ	S28°10'44"E	5.00'
Ⓚ	N62°47'26"E	6.32'
Ⓛ	S25°01'46"E	35.82'
Ⓜ	N25°01'46"W	34.03'
Ⓝ	S89°57'41"W	11.44'

SURVEY NOTES:
1. ALL DIMENSIONS ARE MEASURED UNLESS NOTED OTHERWISE.
2. BEARINGS, DISTANCES AND COORDINATES SHOWN HEREON REFERENCE THE ILLINOIS STATE PLANE COORDINATE SYSTEM, EAST ZONE, NAD83 (2011 ADJUSTMENT) GRID".
3. ALL MEASURED AND CALCULATED DISTANCES AREA "GRID" NOT "GROUND". TO OBTAIN GROUND DISTANCES, DIVIDE GRID DISTANCES SHOWN BY THE SCALE FACTOR OF 0.99993761.
4. AREAS SHOWN ON THIS PLAT ARE "GROUND".
5. FIELD SURVEY COMPLETED ON MARCH 20, 2020.

PARCEL NUMBER	TOTAL HOLDINGS ACRES	PART TAKEN ACRES	AREA IN EXISTING R.O.W. ACRES	REMAINDER AREA ACRES	EASEMENT AREA ACRES	EASEMENT AREA SQUARE FEET	PARCEL INDEX NUMBER
1NU0073 1NU0073TE	0.657	0.025		0.632	0.048		13-09-101-025 13-09-101-047
1NU0074 1NU0074TE	1.128	0.097		1.031	0.048		13-08-229-007 13-09-101-046
1NJC075 1NJC075TE-A 1NJC075TE-B	2.538	0.573	0.309	1.965	A-0.020 B-0.062		13-08-229-006 13-09-101-043

LEGEND

SECTION CORNER; QUARTER SECTION CORNER

- SECTION / QUARTER SECTION LINE
- PLATTED LOT LINES
- P — PROPERTY (DEED) LINE
- APL — APPARENT PROPERTY LINE
- EXISTING CENTERLINE
- PROPOSED CENTERLINE
- EXISTING RIGHT OF WAY LINE
- PROPOSED RIGHT OF WAY LINE
- EXISTING EASEMENT
- PROPOSED EASEMENT
- AC — EXISTING ACCESS CONTROL LINE
- AC — PROPOSED ACCESS CONTROL LINE
- 129.22' MEASURED DIMENSION
- 129.32' (COMP) COMPUTED DIMENSION
- (129.22') RECORDED DIMENSION
- EXISTING BUILDING

GRAPHIC SCALE FEET — SCALE: 1"=30'

BEARINGS ARE REFERENCED TO THE ILLINOIS STATE PLANE COORDINATE SYSTEM, NAD83 (2011 ADJUSTMENT), EAST ZONE.

- ○ IRON PIPE OR ROD FOUND
- ⊕ "MAG" NAIL SET
- + CUT CROSS FOUND OR SET
- ● 5 / 8" REBAR SET
- ■ STAKING OF PROPOSED RIGHT OF WAY. SET DIVISION OF HIGHWAYS SURVEY MARKER TO MONUMENT THE POSITION SHOWN. IDENTIFIED BY INSCRIPTION DATA AND SURVEYORS REGISTRATION NUMBER.
- ■ M STAKING OF PROPOSED RIGHT OF WAY IN CULTIVATED AREAS. BURIED 5/8 INCH METAL ROD 20 INCHES BELOW GROUND TO MARK FUTURE SURVEY MARKER POSITION IDENTIFIED BY COLORED PLASTIC CAP BEARING SURVEYORS REGISTRATION NUMBER.
- PERMANENT SURVEY MARKER, I.D.O.T. STANDARD 667101-02 (TO BE SET BY OTHERS)
- □ RIGHT OF WAY STAKING PROPOSED TO BE SET

STATE OF ILLINOIS)
) SS
COUNTY OF WILL)

THIS IS TO CERTIFY THAT I, KENNETH J. PESAVENTO, AN ILLINOIS PROFESSIONAL LAND SURVEYOR, (WE, RUETTIGER, TONELLI & ASSOCIATES, AN ILLINOIS PROFESSIONAL DESIGN FIRM LAND SURVEYING CORPORATION, NUMBER 184-001251,) HAVE SURVEYED THE PLAT OF HIGHWAYS SHOWN HEREON IN SECTIONS 8 & 9, TOWNSHIP 44 NORTH, RANGE 7 EAST OF THE THIRD PRINCIPAL MERIDIAN, McHENRY COUNTY, THAT THE SURVEY IS TRUE AND COMPLETE AS SHOWN TO THE BEST OF MY KNOWLEDGE AND BELIEF, THAT THE PLAT CORRECTLY REPRESENTS SAID SURVEY, THAT ALL MONUMENTS FOUND AND ESTABLISHED ARE OF PERMANENT QUALITY AND OCCUPY THE POSITIONS SHOWN THEREON AND THAT THE MONUMENTS ARE SUFFICIENT TO ENABLE THE SURVEY TO BE RETRACED, MADE FOR THE DEPARTMENT OF TRANSPORTATION, STATE OF ILLINOIS.

DATED AT SHOREWOOD, ILLINOIS THIS 28TH DAY OF JANUARY 2025 A.D.

ILLINOIS PROFESSIONAL LAND SURVEYOR NO. 3425
LICENSE EXPIRATION DATE: 11-30-2026

THIS PROFESSIONAL SERVICE CONFORMS TO THE CURRENT ILLINOIS MINIMUM STANDARDS FOR A BOUNDARY SURVEY.

KENNETH J. PESAVENTO 3425 PROFESSIONAL LAND SURVEYOR STATE OF ILLINOIS SHOREWOOD, ILLINOIS

EXIST. CURVE EXR147-C3
PI STA. = 169+36.37
Δ = 23° 26' 07" (LT)
D = 2° 20' 59"
R = 2,438.29'
T = 505.73'
L = 997.32'
E = 51.90'
e =
T.R. = -----
S.E. RUN = -----
P.C. STA. = 164+30.63
P.T. STA. = 174+27.96

IDOT USE ONLY

Ruettiger, Tonelli & Associates, Inc.
Surveyors • Engineers • Planners • Landscape Architects • GIS Consultants
(29 CAPITOL DRIVE - SHOREWOOD, ILLINOIS 60404
PH: (815) 744-6000 FAX: (815) 744-0181
website: www.rttsurvtech.com
R.T. & A. Dwg. No.: 2020-0163.00

PLAT OF HIGHWAYS
STATE OF ILLINOIS
DEPARTMENT OF TRANSPORTATION
ILLINOIS ROUTE 47

LIMITS: IL 120 TO US 14 — COUNTY: McHENRY
SECTION: — JOB NO.: R-91-019-17
STA. 160+98.36 TO STA. 167+17.22
SCALE: 1"=30' — SHEET 36 OF 57 SHEETS

BUREAU OF LAND ACQUISITION
201 WEST CENTER COURT
SCHAUMBURG, ILLINOIS 60196

REVISION DATE: / / REVISION MADE BY:

FOR REFERENCE ONLY - N.T.S.

MODEL: Default
FILE NAME: pw:\\aecom-na-pw.bentley.com:AECOM_D521_NA_2020\Documents\60632011-IL-47900-CAD901D_CAD03_SHEETS\General\D160X17-sht-PLAT.dgn

AECOM
303 EAST WACKER DRIVE, SUITE 1400
CHICAGO, IL 60601-5276
PHONE: (312) 373-7700 FAX: (312) 373-6800

USER NAME = muniza	DESIGNED -	REVISED -	
	DRAWN -	REVISED -	
PLOT SCALE = 100.0000 ' / in.	CHECKED -	REVISED -	
PLOT DATE = 2/7/2025	DATE -	REVISED -	

STATE OF ILLINOIS
DEPARTMENT OF TRANSPORTATION

SCALE: | SHEET OF SHEETS | STA. TO STA.

F.A.P. RTE.	SECTION	COUNTY	TOTAL SHEETS	SHEET NO.
326	2024-1052-N,C,SW,FL	MCHENRY	941	607
		CONTRACT NO. 62X94		
		ILLINOIS	FED. AID PROJECT	

PART OF NE 1/4 OF SECTION 8 TWP.44N., R.7E. OF THE 3RD. P.M., IN McHENRY COUNTY, ILLINOIS.

PARCEL NUMBER	TOTAL HOLDINGS ACRES	PART TAKEN ACRES	AREA IN EXISTING R.O.W. ACRES	REMAINDER AREA ACRES	EASEMENT AREA ACRES	EASEMENT AREA SQUARE FEET	PARCEL INDEX NUMBER
1NU0067 1NU0067TE	7.943	0.053		7.890	0.154		13-08-228-018 13-08-228-010 13-08-228-006 13-08-228-007 13-08-228-008 13-08-228-009 13-08-228-014 13-08-228-020 13-08-228-019 13-08-228-021 13-08-228-015

LEGEND

- SECTION CORNER
- QUARTER SECTION CORNER
- SECTION / QUARTER SECTION LINE
- PLATTED LOT LINES
- P — PROPERTY (DEED) LINE
- APL — APPARENT PROPERTY LINE
- EXISTING CENTERLINE
- PROPOSED CENTERLINE
- EXISTING RIGHT OF WAY LINE
- PROPOSED RIGHT OF WAY LINE
- EXISTING EASEMENT
- PROPOSED EASEMENT
- AC — EXISTING ACCESS CONTROL LINE
- AC — PROPOSED ACCESS CONTROL LINE
- 129.32' MEASURED DIMENSION
- 129.32' (COMP) COMPUTED DIMENSION
- (129.32') RECORDED DIMENSION
- EXISTING BUILDING

GRAPHIC SCALE FEET
0 30
SCALE: 1"=30'

BEARINGS ARE REFERENCED TO THE ILLINOIS STATE PLANE COORDINATE SYSTEM, NAD83 (2011 ADJUSTMENT), EAST ZONE.

- IRON PIPE OR ROD FOUND
- CUT CROSS FOUND OR SET
- ⊕ "MAG" NAIL SET
- ● 5 / 8" REBAR SET

STAKING OF PROPOSED RIGHT OF WAY. SET DIVISION OF HIGHWAYS SURVEY MARKER TO MONUMENT THE POSITION SHOWN. IDENTIFIED BY INSCRIPTION DATA AND SURVEYORS REGISTRATION NUMBER.

STAKING OF PROPOSED RIGHT OF WAY IN CULTIVATED AREAS. BURIED 5/8 INCH METAL ROD 20 INCHES BELOW GROUND TO MARK FUTURE SURVEY MARKER POSITION IDENTIFIED BY COLORED PLASTIC CAP BEARING SURVEYORS REGISTRATION NUMBER.

PERMANENT SURVEY MARKER, I.D.O.T. STANDARD 667101-02 (TO BE SET BY OTHERS)

RIGHT OF WAY STAKING PROPOSED TO BE SET

SURVEY NOTES:
1. ALL DIMENSIONS ARE MEASURED UNLESS NOTED OTHERWISE.
2. BEARINGS, DISTANCES AND COORDINATES SHOWN HEREON REFERENCE THE ILLINOIS STATE PLANE COORDINATE SYSTEM, EAST ZONE, NAD83 (2011 ADJUSTMENT) "GRID".
3. ALL MEASURED AND CALCULATED DISTANCES ARE "GRID" NOT "GROUND". TO OBTAIN GROUND DISTANCES, DIVIDE GRID DISTANCES SHOWN BY THE SCALE FACTOR OF 0.99993761.
4. AREAS SHOWN ON THIS PLAT ARE "GROUND".
5. FIELD SURVEY COMPLETED ON MARCH 26, 2020.

EXIST. CURVE EXRT47-C3
PI STA. = 166+36.37
Δ = 23° 26' 07" (LT)
D = 2° 20' 59"
R = 2,438.29'
T = 505.73'
L = 997.32'
E = 51.90'
e = -----
T.R. = -----
S.E. RUN = -----
P.C. STA. = 164+30.63
P.T. STA. = 174+27.96

PROJECT COORDINATES
Illinois State Plane, East Zone, NAD83 (2011)
EXISTING CENTERLINE, IL ROUTE 47

PT#	STATION	OFFSET	NORTH	EAST
314	161+17.95	-34.77	2056039.255	957150.380
8081	160+00.58	-49.61	2055926.720	957136.879
8084	160+19.92	-40.62	2055948.053	957136.790
8178	165+25.10	-39.71	2056403.450	956681.755
8612	164+21.49	-39.60	2056311.611	957026.894
9010	164+30.63	0.00	2056337.631	957058.840
9240	160+10.20	-70.00	2055926.757	957174.335
9241	160+76.00	-70.00	2055980.878	957148.897
9242	160+76.00	-55.00	2055987.758	957162.471
9243	160+11.40	-44.58	2055938.651	957196.829
9251	162+29.82	-55.58	2056129.945	957090.341
9252	162+29.82	-55.00	2056131.894	957094.488
9257	164+30.63	-44.58	2056318.066	957118.482
9258	164+30.63	55.00	2056313.635	957105.064
9262	165+27.68	-44.58	2056403.461	956976.259
9264	165+33.25	-55.00	2056403.483	956964.501
9279	161+69.82	55.58	2056075.844	957115.864
9280	161+60.82	55.00	2056077.593	957126.011

SEE SHEET 38

SEE SHEET 36

SEE TOTAL HOLDING DIAGRAM TO LEFT

SEE SHEET 34

TOTAL HOLDING DIAGRAM OF PARCEL 1NU0067
SCALE: 1"=100'

STATE OF ILLINOIS)
) SS
COUNTY OF WILL)

THIS IS TO CERTIFY THAT I, KENNETH J. PESAVENTO, AN ILLINOIS PROFESSIONAL LAND SURVEYOR, (WE, RUETTIGER, TONELLI & ASSOCIATES, AN ILLINOIS PROFESSIONAL DESIGN FIRM LAND SURVEYING CORPORATION, NUMBER 184-001251) HAVE SURVEYED THE PLAT OF HIGHWAYS SHOWN HEREON IN SECTION 8, TOWNSHIP 44 NORTH, RANGE 7 EAST OF THE THIRD PRINCIPAL MERIDIAN, McHENRY COUNTY, THAT THE SURVEY IS TRUE AND COMPLETE AS SHOWN TO THE BEST OF MY KNOWLEDGE AND BELIEF, THAT THE PLAT CORRECTLY REPRESENTS SAID SURVEY, THAT ALL MONUMENTS FOUND AND ESTABLISHED ARE OF PERMANENT QUALITY AND OCCUPY THE POSITIONS SHOWN THEREON AND THAT THE MONUMENTS ARE SUFFICIENT TO ENABLE THE SURVEY TO BE RETRACED, MADE FOR THE DEPARTMENT OF TRANSPORTATION, STATE OF ILLINOIS.

DATED AT SHOREWOOD, ILLINOIS THIS 28TH DAY OF JANUARY 2025 A.D.

KENNETH J. PESAVENTO
ILLINOIS PROFESSIONAL LAND SURVEYOR NO. 3425
LICENSE EXPIRATION DATE: 11-30-2026

KENNETH J. PESAVENTO 3425 PROFESSIONAL LAND SURVEYOR STATE OF ILLINOIS CORNELL, ILLINOIS

THIS PROFESSIONAL SERVICE CONFORMS TO THE CURRENT ILLINOIS MINIMUM STANDARDS FOR A BOUNDARY SURVEY.

IDOT USE ONLY

Ruettiger, Tonelli & Associates, Inc.
Surveyors • Engineers • Planners • Landscape Architects • GIS Consultants
129 CAPETA DRIVE - SHOREWOOD, ILLINOIS 60404
PH: (815) 744-4600 FAX: (815) 744-4601
website: www.rueltigertonelli.com
R.T. & A. Dwg. No.: 2020-0163.00

PLAT OF HIGHWAYS
STATE OF ILLINOIS
DEPARTMENT OF TRANSPORTATION
ILLINOIS ROUTE 47

LIMITS: IL 120 TO US 14 — COUNTY: McHENRY
SECTION: — JOB NO.: R-91-019-17
STA. 160+00.58 TO STA. 185+33.25
SCALE: 1"=30' — SHEET 37 OF 57 SHEETS

BUREAU OF LAND ACQUISITION
201 WEST CENTER COURT
SCHAUMBURG, ILLINOIS 60196

FOR REFERENCE ONLY - N.T.S.

MODEL: Default
FILE NAME: pw:\\aecom-na-pw.bentley.com:AECOM_D521_NA_2020\Documents\60632011-IL-471900-CAD910_CAD03_SHEETS\General\D160X17-sht-PLAT.dgn

AECOM
303 EAST WACKER DRIVE, SUITE 1400
CHICAGO, IL 60601-5276
PHONE: (312) 373-7700 FAX: (312) 373-6800

USER NAME = muniza	DESIGNED -	REVISED -
	DRAWN -	REVISED -
PLOT SCALE = 100.0000 ' / in.	CHECKED -	REVISED -
PLOT DATE = 2/7/2025	DATE -	REVISED -

STATE OF ILLINOIS
DEPARTMENT OF TRANSPORTATION

SCALE: | SHEET OF SHEETS | STA. TO STA.

F.A.P. RTE.	SECTION	COUNTY	TOTAL SHEETS	SHEET NO.
326	2024-1052-N,C,SW,FL	MCHENRY	941	608
		CONTRACT NO. 62X94		
		ILLINOIS	FED. AID PROJECT	

PART OF SE 1/4 OF SECTION 5 & PART OF NE 1/4 OF SECTION 8, BOTH IN TWP.44N., R.7E. OF THE 3RD. P.M., IN McHENRY COUNTY, ILLINOIS.

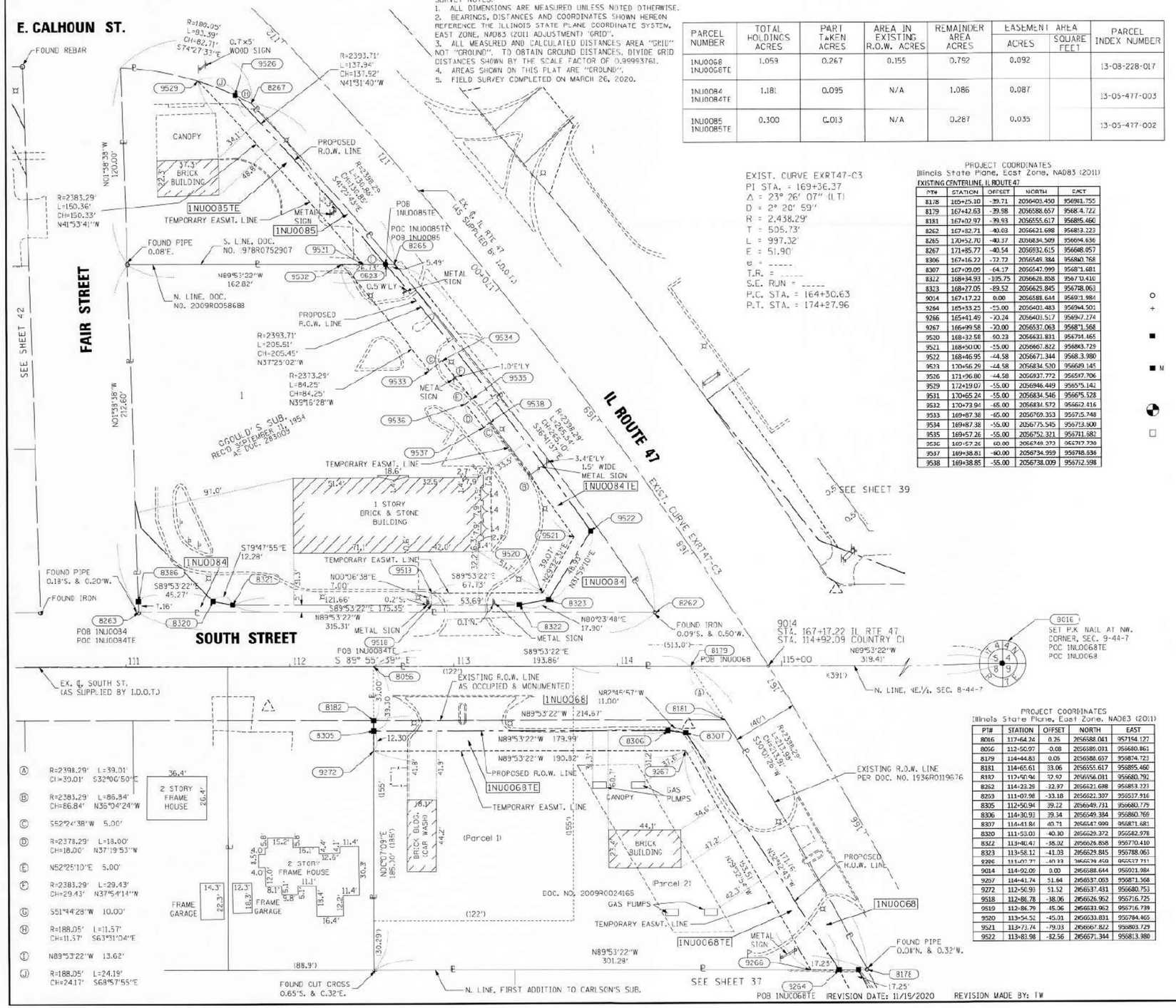
E. CALHOUN ST.
FAIR STREET
SOUTH STREET
IL ROUTE 47
SEE SHEET 42
SEE SHEET 39
SEE SHEET 37
FOUND REBAR
0.7'x5' WOOD SIGN
CANOPY
37.3' BRICK BUILDING
PROPOSED R.O.W. LINE
1NU0085TE
TEMPORARY EASMT. LINE
METAL SIGN
1NU0085
FOUND PIPE 0.08'E.
S. LINE, DOC. NO. 97R0752907
N. LINE, DOC. NO. 2009R0058688
POB 1NU0085TE
POC 1NU0085TE
POB 1NU0085
EX. ℄ ILRTE 47 AS SUPPLIED BY I.D.O.T.
PROPOSED R.O.W. LINE
METAL SIGN
1.0'E'LY
3.4'E'LY 1.5' WIDE METAL SIGN
1NU0084TE
1 STORY BRICK & STONE BUILDING
GOULD'S SUB. RECD SEPTEMBER 11, 1954 AS DOC. 283009
1NU0084
FOUND PIPE 0.18'S. & 0.20'W.
FOUND IRON
POB 1NU0084
POC 1NU0084TE
POB 1NU0084TE
S 89° 55' 39" E
EXISTING R.O.W. LINE AS OCCUPIED & MONUMENTED
1NU0068
PROPOSED R.O.W. LINE
1NU0068TE
TEMPORARY EASMT. LINE
EXISTING R.O.W. LINE PER DOC. NO. 1936R0119676
PROPOSED R.O.W. LINE
GAS PUMPS
CANOPY
BRICK BUILDING
2 STORY FRAME HOUSE
FRAME GARAGE
BRICK BLDG. (CAR WASH)
(Parcel 1)
(Parcel 2)
DOC. NO. 2009R0024165
FOUND CUT CROSS 0.65'S. & C.32'E.
N. LINE, FIRST ADDITION TO CARLSON'S SUB.
FOUND PIPE 0.08'N. & 0.32'W.
POB 1NU0068TE
FOUND IRON 0.09'S. & 0.50'W.
POB 1NU0068
9014 STA. 167+17.22 IL RTE 47 STA. 114+92.09 COUNTRY CI
SET P.K NAIL AT NW. CORNER, SEC. 9-44-7
POC 1NU0068TE
POC 1NU0068
N. LINE, NE1/4, SEC. 8-44-7
R=188.05' L=93.39' CH=82.71' S74°27'33"E
R=2393.71' L=137.94' CH=137.92' N41°31'40"W
R=2383.29' L=150.36' CH=150.33' N41°53'41"W
R=2398.29' L=130.86' CH=130.85' S41°25'43"E
R=2393.71' L=205.51' CH=205.45' N37°25'02"W
R=2373.29' L=84.25' CH=84.25' N39°16'28"W
R=2398.29' L=265.54' CH=265.41' S36°41'57"E
N01°58'38"W 120.00'
N01°58'38"W 212.60'
S79°47'55"E 12.28'
N89°53'22"W 162.82'
N89°53'22"W 315.31'
S89°53'22"E 193.86'
N89°53'22"W 179.99'
N89°53'22"W 190.82'
N89°53'22"W 214.67'
N89°53'22"W 301.28'
N00°06'38"E 7.00'
S89°53'22"E 67.73'
N00°06'38"E 121.66'
S89°53'22"E 175.35'
N00°07'09"E 185.00' (185')
N80°23'48"E 17.30'
N89°53'22"W 319.41'
N2°46'57"W 11.00'
S20°01'26"W
R=2398.29' L=211.29' CH=211.23'
(513.0')
(391')
(122')
(88.9')
(40')
(155')
(1)
(2)
(3)
(4)
(5)
(6)
(7)
(8)
(9)
(10)
(11)
(12)
(13)
(14)
(15)
(16)
(17)
(18)
(19)
(20)
(21)
(22)
(23)
(24)
(25)
(26)
(27)
(28)
(29)
(30)
(31)
(32)
(33)
(34)
(35)
(36)
(37)
(38)
(39)
(40)

PART OF SW 1/4 OF SECTION 4 & PART OF SE 1/4 OF SECTION 5 TWP.44N., R.7E. OF THE 3RD. P.M., IN McHENRY COUNTY, ILLINOIS.

PARCEL NUMBER	TOTAL HOLDINGS ACRES	PART TAKEN ACRES	AREA IN EXISTING R.O.W. ACRES	REMAINDER AREA ACRES	EASEMENT AREA ACRES	EASEMENT AREA SQUARE FEET	PARCEL INDEX NUMBER
1NU0076TE	0.559	0.00		0.559	0.021		13-05-478-024
1NU0077 1NU0077TE	0.691	0.018		0.673	0.060		13-05-478-023
1NU0078TE	0.850	0.00		0.850	0.012		13-05-478-021
1NU0079TE	9.502	0.00		9.502	0.024		13-05-478-016
1NU0080TE	0.579	0.00		0.579	0.017		13-05-478-020

SURVEY NOTES:
1. ALL DIMENSIONS ARE MEASURED UNLESS NOTED OTHERWISE.
2. BEARINGS, DISTANCES AND COORDINATES SHOWN HEREON REFERENCE THE ILLINOIS STATE PLANE COORDINATE SYSTEM, EAST ZONE, NAD83 (2011 ADJUSTMENT) "GRID".
3. ALL MEASURED AND CALCULATED DISTANCES AREA "GRID" NOT "GROUND". TO OBTAIN GROUND DISTANCES, DIVIDE GRID DISTANCES SHOWN BY THE SCALE FACTOR OF 0.99993761.
4. AREAS SHOWN ON THIS PLAT ARE "GROUND".
5. FIELD SURVEY COMPLETED ON MARCH 26, 2020.

LEGEND

- SECTION CORNER
- QUARTER SECTION CORNER
- SECTION / QUARTER SECTION LINE
- PLATTED LOT LINES
- P — PROPERTY (DEED) LINE
- APL — APPARENT PROPERTY LINE
- EXISTING CENTERLINE
- PROPOSED CENTERLINE
- EXISTING RIGHT OF WAY LINE
- PROPOSED RIGHT OF WAY LINE
- EXISTING EASEMENT
- PROPOSED EASEMENT
- AC — EXISTING ACCESS CONTROL LINE
- AC — PROPOSED ACCESS CONTROL LINE
- 129.32' MEASURED DIMENSION
- 129.32' (COMP) COMPUTED DIMENSION
- (129.32') RECORDED DIMENSION
- EXISTING BUILDING

GRAPHIC SCALE FEET, 0 30, SCALE: 1"=30'

BEARINGS ARE REFERENCED TO THE ILLINOIS STATE PLANE COORDINATE SYSTEM, NAD83 (2011 ADJUSTMENT), EAST ZONE.

- IRON PIPE OR ROD FOUND
- ⊕ "MAG" NAIL SET
- \+ CUT CROSS FOUND OR SET
- ● 5/8" REBAR SET
- ■ STAKING OF PROPOSED RIGHT OF WAY. SET DIVISION OF HIGHWAYS SURVEY MARKER TO MONUMENT THE POSITION SHOWN. IDENTIFIED BY INSCRIPTION DATA AND SURVEYORS REGISTRATION NUMBER.
- ■ N STAKING OF PROPOSED RIGHT OF WAY IN CULTIVATED AREAS. BURIED 5/8 INCH METAL ROD 20 INCHES BELOW GROUND TO MARK FUTURE SURVEY MARKER POSITION IDENTIFIED BY COLORED PLASTIC CAP BEARING SURVEYORS REGISTRATION NUMBER.
- PERMANENT SURVEY MARKER, I.D.O.T. STANDARD 606101-02 (TO BE SET BY OTHERS)
- RIGHT OF WAY STAKING PROPOSED TO BE SET

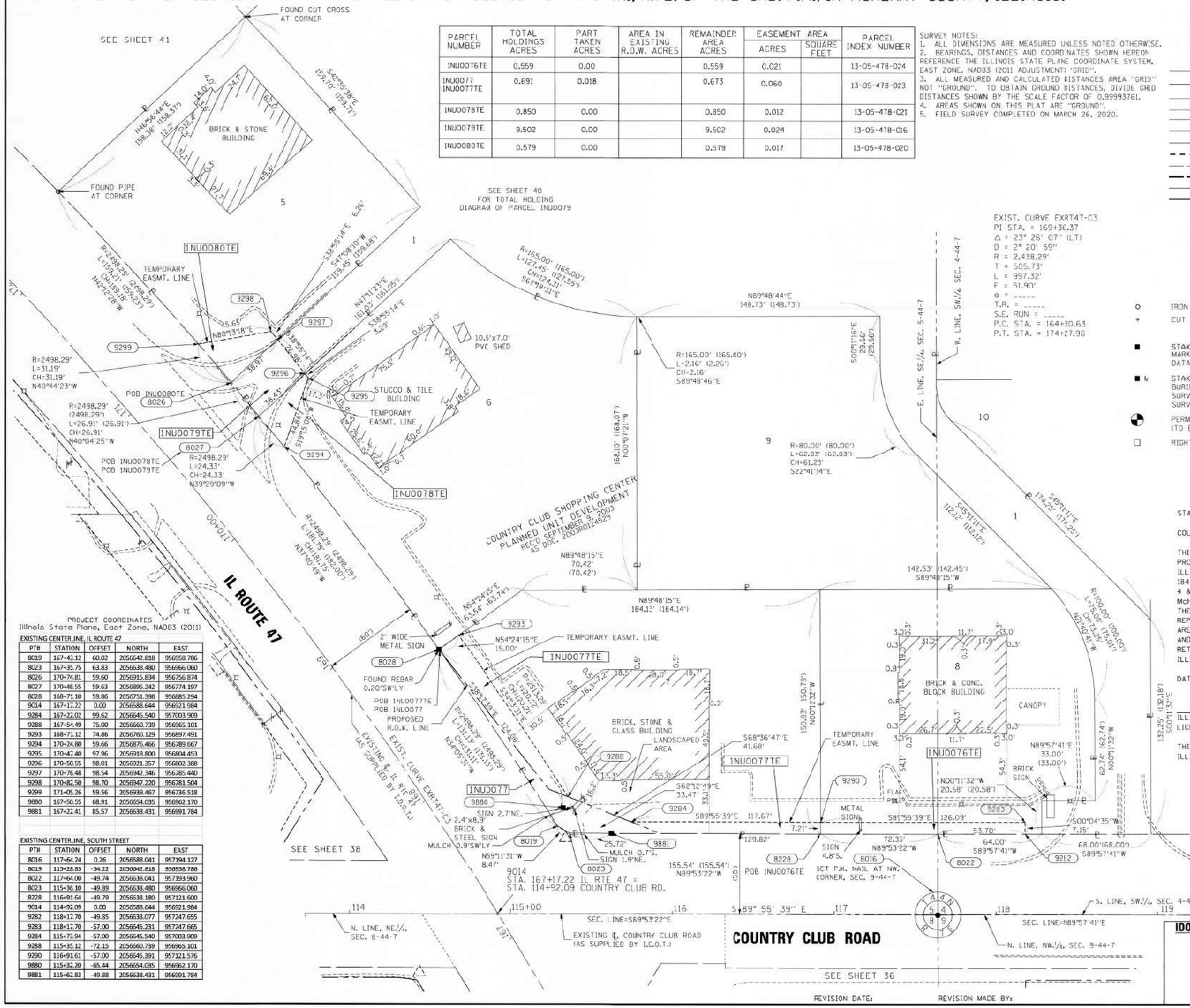

STATE OF ILLINOIS)
)SS
COUNTY OF WILL)

THIS IS TO CERTIFY THAT I, KENNETH J. PESAVENTO, AN ILLINOIS PROFESSIONAL LAND SURVEYOR, (WE, RUETTIGER, TONELLI & ASSOCIATES, AN ILLINOIS PROFESSIONAL DESIGN FIRM LAND SURVEYING CORPORATION, NUMBER 184-001251,) HAVE SURVEYED THE PLAT OF HIGHWAYS SHOWN HEREON IN SECTIONS 4 & 5, TOWNSHIP 44 NORTH, RANGE 7 EAST OF THE THIRD PRINCIPAL MERIDIAN, McHENRY COUNTY, THAT THE SURVEY IS TRUE AND COMPLETE AS SHOWN TO THE BEST OF MY KNOWLEDGE AND BELIEF, THAT THE PLAT CORRECTLY REPRESENTS SAID SURVEY, THAT ALL MONUMENTS FOUND AND ESTABLISHED ARE OF PERMANENT QUALITY AND OCCUPY THE POSITIONS SHOWN THEREON AND THAT THE MONUMENTS ARE SUFFICIENT TO ENABLE THE SURVEY TO BE RETRACED, MADE FOR THE DEPARTMENT OF TRANSPORTATION, STATE OF ILLINOIS.

DATED AT SHOREWOOD, ILLINOIS THIS 28TH DAY OF JANUARY 2025 A.D.

ILLINOIS PROFESSIONAL LAND SURVEYOR NO. 3425
LICENSE EXPIRATION DATE: 11-30-2026

THIS PROFESSIONAL SERVICE CONFORMS TO THE CURRENT ILLINOIS MINIMUM STANDARDS FOR A BOUNDARY SURVEY.

3425 PROFESSIONAL LAND SURVEYOR STATE OF ILLINOIS KENNETH J. PESAVENTO

Ruettiger, Tonelli & Associates, Inc.
Surveyors • Engineers • Planners • Landscape Architects • G.I.S. Consultants
129 CAPISTA DRIVE - SHOREWOOD, ILLINOIS 60404
PH. (815) 744-6600 FAX (815) 744-6101
website: www.ruettigertonelli.com
R.T. & A. Dwg. No.: 2020-0163.00

PLAT OF HIGHWAYS
STATE OF ILLINOIS
DEPARTMENT OF TRANSPORTATION
ILLINOIS ROUTE 47

LIMITS: IL 120 TO US 14 — COUNTY: McHENRY
SECTION: — JOB NO.: R-91-019-17
STA. 167+17.22 TO STA. 172+00
SCALE: 1"=30' — SHEET 39 OF 67 SHEETS

IDOT USE ONLY

BUREAU OF LAND ACQUISITION
201 WEST CENTER COURT
SCHAUMBURG, ILLINOIS 60196

FOR REFERENCE ONLY - N.T.S.

MODEL: Default
FILE NAME: pw:\\aecom-na-pw.bentley.com:AECOM_0523_NA_2020\Documents\606320111-IL-47900-CAD\910_CAD\03_SHEETS\General\D160X17-sht-PLAT.dgn

AECOM
303 EAST WACKER DRIVE, SUITE 1400
CHICAGO, IL 60601-5276
PHONE: (312) 373-7700 FAX: (312) 373-6800

USER NAME = muniza	DESIGNED -	REVISED -	
	DRAWN -	REVISED -	
PLOT SCALE = 100.0000 ' / in.	CHECKED -	REVISED -	
PLOT DATE = 2/7/2025	DATE -	REVISED -	

STATE OF ILLINOIS
DEPARTMENT OF TRANSPORTATION

SCALE: | SHEET OF SHEETS | STA. TO STA.

F.A.P. RTE.	SECTION	COUNTY	TOTAL SHEETS	SHEET NO.
326	2024-1052-N,C,SW,FL	MCHENRY	941	610
		CONTRACT NO. 62X94		
	ILLINOIS FED. AID PROJECT			

PART OF SW 1/4 OF SECTION 4 & SE 1/4 OF SECTION 5 , ALL IN TWP.44N., R.7E. OF THE 3RD. P.M., IN McHENRY COUNTY, ILLINOIS.

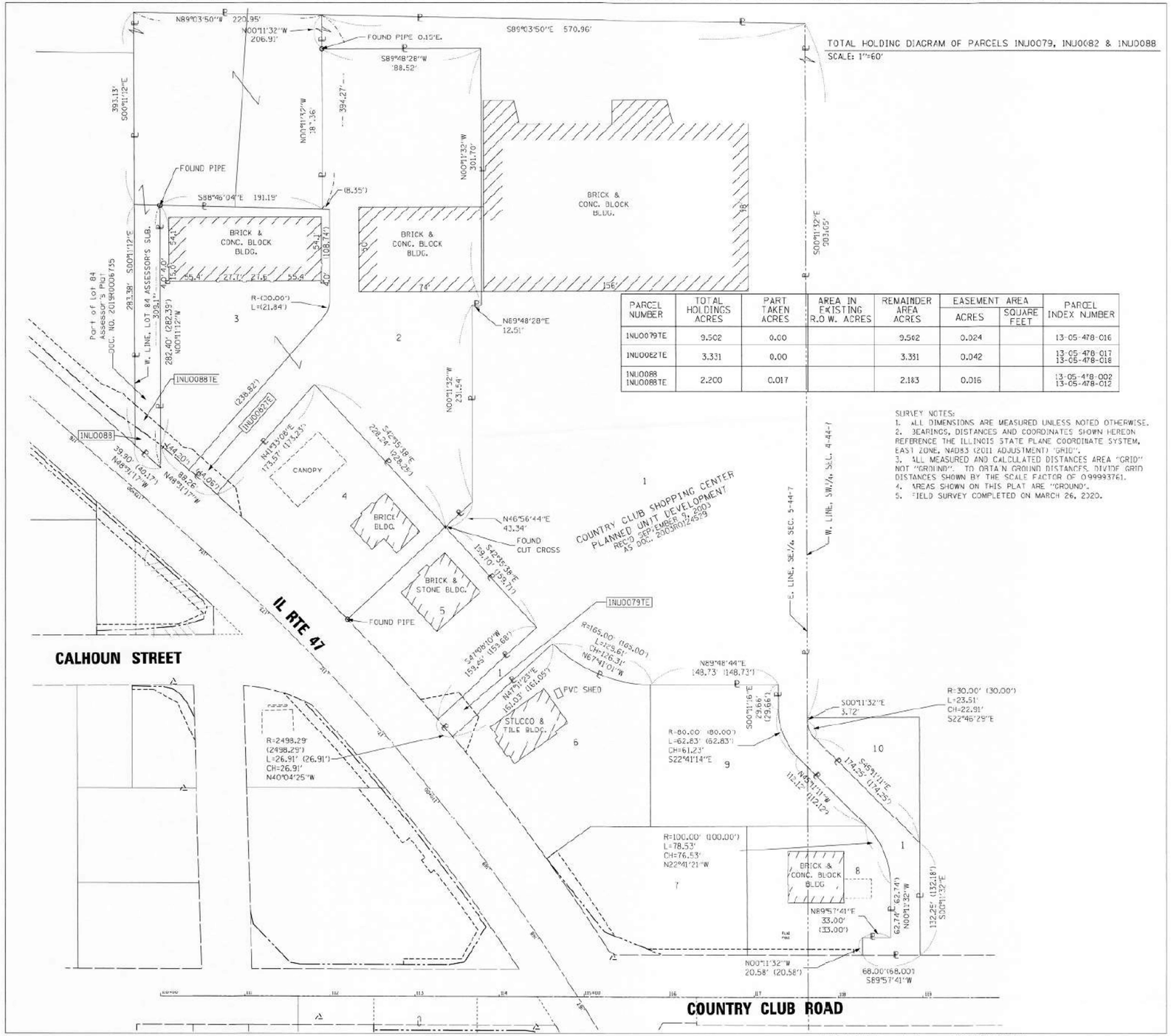

TOTAL HOLDING DIAGRAM OF PARCELS INJU0079, INJU0082 & INJU0088
SCALE: 1"=60'

PARCEL NUMBER	TOTAL HOLDINGS ACRES	PART TAKEN ACRES	AREA IN EXISTING R.O.W. ACRES	REMAINDER AREA ACRES	EASEMENT AREA ACRES	EASEMENT AREA SQUARE FEET	PARCEL INDEX NUMBER
INU0079TE	9.562	0.00		9.562	0.024		13-05-478-016
INU0082TE	3.331	0.00		3.331	0.042		13-05-478-017 13-05-478-018
INU0088 INU0088TE	2.200	0.017		2.183	0.016		13-05-478-002 13-05-478-012

SURVEY NOTES:
1. ALL DIMENSIONS ARE MEASURED UNLESS NOTED OTHERWISE.
2. BEARINGS, DISTANCES AND COORDINATES SHOWN HEREON REFERENCE THE ILLINOIS STATE PLANE COORDINATE SYSTEM, EAST ZONE, NAD83 (2011 ADJUSTMENT) "GRID".
3. ALL MEASURED AND CALCULATED DISTANCES AREA "GRID" NOT "GROUND". TO OBTAIN GROUND DISTANCES, DIVIDE GRID DISTANCES SHOWN BY THE SCALE FACTOR OF 0.99993761.
4. AREAS SHOWN ON THIS PLAT ARE "GROUND".
5. FIELD SURVEY COMPLETED ON MARCH 26, 2220.

LEGEND

SECTION CORNER — QUARTER SECTION CORNER

GRAPHIC SCALE FEET — SCALE: 1"=30'

- SECTION / QUARTER SECTION LINE
- PLATTED LOT LINES
- PROPERTY (DEED) LINE
- APPARENT PROPERTY LINE
- EXISTING CENTERLINE
- PROPOSED CENTERLINE
- EXISTING RIGHT OF WAY LINE
- PROPOSED RIGHT OF WAY LINE
- EXISTING EASEMENT
- PROPOSED EASEMENT
- EXISTING ACCESS CONTROL LINE
- PROPOSED ACCESS CONTROL LINE
- 129.22' MEASURED DIMENSION
- 129.32' (COMP) COMPUTED DIMENSION
- (129.22') RECORDED DIMENSION
- EXISTING BUILDING

BEARINGS ARE REFERENCED TO THE ILLINOIS STATE PLANE COORDINATE SYSTEM,NAD83 (2011 ADJUSTMENT),EAST ZONE.

- ○ IRON PIPE OR ROD FOUND
- ⊕ "MAG" NAIL SET
- + CUT CROSS FOUND OR SET
- ● 5/8"REBAR SET
- ■ STAKING OF PROPOSED RIGHT OF WAY. SET DEVISION OF HIGHWAYS SURVEY MARKER TO MONUMENT THE POSITION SHOWN. IDENTIFIED BY INSCRIPTION DATA AND SURVEYORS REGISTRATION NUMBER.
- ■ M STAKING OF PROPOSED RIGHT OF WAY IN CULTIVATED AREAS. BURIED 5/8 INCH METAL ROD 20 INCHES BELOW GROUND TO MARK FUTURE SURVEY MARKER POSITION IDENTIFIED BY COLORED PLASTIC CAP BEARING SURVEYORS REGISTRATION NUMBER.
- ⊕ PERMANENT SURVEY MARKER, I.D.O.T. STANDARD 867101-02 (TO BE SET BY OTHERS)
- □ RIGHT OF WAY STAKING PROPOSED TO BE SET

STATE OF ILLINOIS)
)SS
COUNTY OF WILL)

THIS IS TO CERTIFY THAT I, KENNETH J. PESAVENTO, AN ILLINOIS PROFESSIONAL LAND SURVEYOR, (WE RUETTIGER, TONELLI & ASSOCIATES, AN ILLINOIS PROFESSIONAL DESIGN FIRM LAND SURVEYING CORPORATION, NUMBER 184-001251,) HAVE SURVEYED THE PLAT OF HIGHWAYS SHOWN HEREON IN SECTIONS 4 & 5, TOWNSHIP 44 NORTH, RANGE 7 EAST OF THE THIRD PRINCIPAL MERIDIAN, McHENRY COUNTY, THAT THE SURVEY IS TRUE AND COMPLETE AS SHOWN TO THE BEST OF MY KNOWLEDGE AND BELIEF, THAT THE PLAT CORRECTLY REPRESENTS SAID SURVEY, THAT ALL MONUMENTS FOUND AND ESTABLISHED ARE OF PERMANENT QUALITY AND OCCUPY THE POSITIONS SHOWN THEREON AND THAT THE MONUMENTS ARE SUFFICIENT TO ENABLE THE SURVEY TO BE RETRACED, MADE FOR THE DEPARTMENT OF TRANSPORTATION, STATE OF ILLINOIS.

DATED AT SHOREWOOD, ILLINOIS THIS 28TH DAY OF JANUARY 2025 A.D.

ILLINOIS PROFESSIONAL LAND SURVEYOR NO. 3425
LICENSE EXPIRATION DATE: 11-30-2026

KENNETH J. PESAVENTO 3425 PROFESSIONAL LAND SURVEYOR STATE OF ILLINOIS SHOREWOOD, ILLINOIS

THIS PROFESSIONAL SERVICE CONFORMS TO THE CURRENT ILLINOIS MINIMUM STANDARDS FOR A BOUNDARY SURVEY.

Ruettiger, Tonelli & Associates, Inc.
Surveyors • Engineers • Planners • Landscape Architects • GIS Consultants
129 CAPESTA DRIVE · SHOREWOOD, ILLINOIS 60404
PH. (815) 744-6600 FAX (815) 744-6101
website: www.ruettigertonelli.com

R.T. & A. Dwg. No.: 2020-0163.00

PLAT OF HIGHWAYS

STATE OF ILLINOIS
DEPARTMENT OF TRANSPORTATION
ILLINOIS ROUTE 47

LIMITS: IL 120 TO US 14 — COUNTY: McHENRY
SECTION: — JOB NO.: R-91-019-17
STA. N/A TO STA. N/A
SCALE: N/A — SHEET 10 OF 67 SHEETS

BUREAU OF LAND ACQUISITION
201 WEST CENTER COURT
SCHAUMBURG, ILLINOIS 60196

IDOT USE ONLY

REVISION DATE: / / REVISION MADE BY:

FOR REFERENCE ONLY - N.T.S.

AECOM
303 EAST WACKER DRIVE, SUITE 1400
CHICAGO, IL 60601-5276
PHONE: (312) 373-7700 FAX: (312) 373-6800

USER NAME = muniza	DESIGNED -	REVISED -	
	DRAWN -	REVISED -	
PLOT SCALE = 100.0000 ' / in.	CHECKED -	REVISED -	
PLOT DATE = 2/7/2025	DATE -	REVISED -	

STATE OF ILLINOIS
DEPARTMENT OF TRANSPORTATION

SCALE: SHEET OF SHEETS STA. TO STA.

F.A.P. RTE.	SECTION	COUNTY	TOTAL SHEETS	SHEET NO.
326	2024-1052-N,C,SW,FL	MCHENRY	941	611
		CONTRACT NO. 62X94		
		ILLINOIS FED. AID PROJECT		

MODEL: Default
FILE NAME: pw:\\aecom-na-pw.bentley.com:AECOM_DS21_NA_2020\Documents\60632011-IL-470900-CAD\910_CAD\03_SHEETS\General\D160X17-sht-PLAT.dgn

PART OF SE 1/4 OF SECTION 5 TWP. 44N., R.7E. OF THE 3RD. P.M., IN McHENRY COUNTY, ILLINOIS.

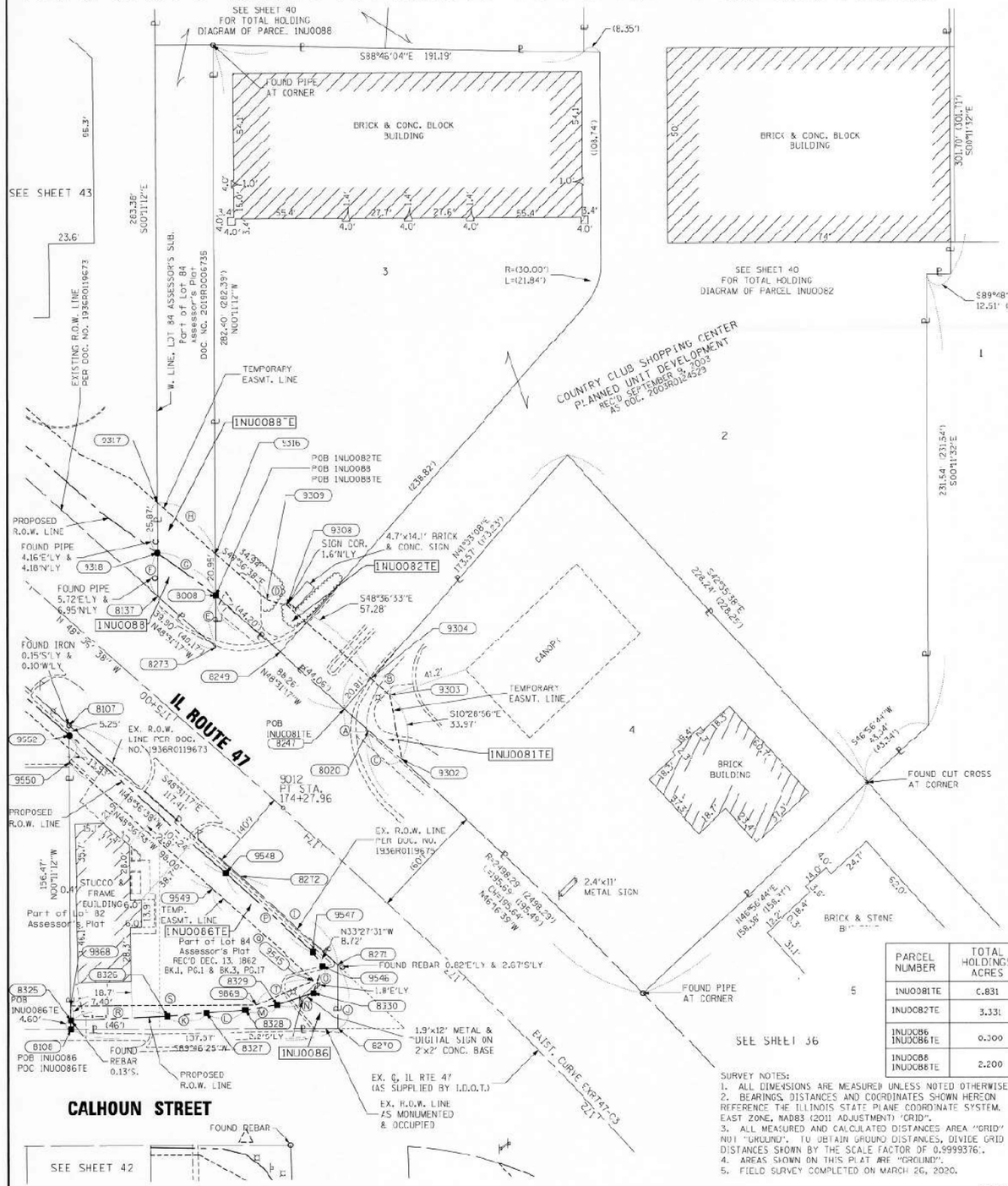

Ⓐ	N43°31'17"W	16.66'
Ⓑ	S48°36'33"E	12.71'
Ⓒ	R=2498.29' CH=22.84'	L=22.84' N48°15'34"W
Ⓓ	S73°10'27"E	11.18'
Ⓔ	S00°11'12"E	26.77'
Ⓕ	N00°11'12"W	21.77'
Ⓖ	S54°21'09"E	36.77'
Ⓗ	S48°36'38"E	39.85'
Ⓘ	R=2398.29' CH=67.60'	L=67.60' S47°42'50"E
Ⓙ	S00°11'12"E	32.68'
Ⓚ	N85°11'14"E	20.00'
Ⓛ	N85°56'32"E	20.00'
Ⓜ	N80°45'48"E	16.60'
Ⓝ	N72°15'14"E	20.00'
Ⓞ	N18°07'49"E	14.50'
Ⓟ	R=2393.71' CH=60.66'	L=60.66' N47°53'04"W
Ⓠ	R=2383.29' CH=70.72'	L=70.72' N47°45'38"W
Ⓡ	N87°33'40"E	50.00'
Ⓢ	N89°46'25"E	95.38'
Ⓣ	N67°18'41"E	32.62'

PROJECT COORDINATES
Illinois State Plane, East Zone, NAD83 (2011)
EXISTING CENTERLINE IL ROUTE 47

PT#	STATION	OFFSET	NORTH	EAST
8008	175+26.04	59.33	2057238.458	956429.935
8020	174+21.28	59.17	2057168.964	956508.542
8107	175+18.68	-40.65	2057171.809	956354.344
8108	174+34.84	157.71	2057015.339	956354.854
8137	175+48.17	39.36	2057238.114	956400.128
8247	174+37.78	59.19	2057180.000	956456.060
8249	174+81.84	59.26	2057209.182	956463.050
8270	173+29.36	64.40	2057015.882	956492.425
8271	173+52.40	-40.74	2057046.560	956492.318
8272	174+21.16	-40.83	2057094.044	956442.308
8273	175+08.77	39.30	2057111.686	956430.022
8325	174+37.90	154.26	2057019.939	956354.839
8326	174+00.48	-119.19	2057027.097	956404.793
8327	173+86.19	-104.86	2057023.745	956424.723
8328	173+71.87	-90.33	2057025.160	956444.673
8329	173+61.30	-77.24	2057027.825	956461.057
8330	173+51.27	-59.78	2057033.921	956480.106
9012	174+27.96	0.00	2057129.100	956464.293
9302	173+88.98	54.23	2057153.751	956515.581
9303	174+25.10	80.00	2057187.165	956519.401
9304	174+37.72	80.00	2057195.572	956509.862
9308	174+95.00	80.00	2057233.448	956466.886
9309	175+09.00	75.00	2057236.309	956456.078
9316	175+39.94	75.00	2057259.409	956429.867
9317	175+79.79	75.00	2057285.734	956399.973
9318	175+62.62	55.65	2057259.886	956400.057
9545	173+55.60	-55.00	2057040.296	956480.286
9546	173+57.53	-46.63	2057047.704	956484.619
9547	173+86.16	-44.58	2057054.975	956479.814
9548	174+27.96	-44.58	2057095.654	956434.818
9549	174+27.96	-55.00	2057087.837	956427.928
9550	173+23.93	-23.00	2057132.032	956504.406
9552	175+35.20	-44.58	2057166.560	956354.361
9868	174+42.81	-148.73	2057027.339	956354.815
9869	173+69.46	-84.71	2057027.716	956450.194

EXIST. CURVE EXRT47-C3
PI STA. = 169+36.37
Δ = 23° 25' 07" (LT)
D = 2° 20' 59"
R = 2,438.29'
T = 505.73'
L = 997.32'
E = 51.90'
e = -----
T.R. = -----
S.E. RUN = -----
P.C. STA. = 164+30.63
P.T. STA. = 174+27.96

LEGEND

SECTION CORNER — 15 QUARTER SECTION CORNER

GRAPHIC SCALE FEET — SCALE: 1"=30'

- SECTION / QUARTER SECTION LINE
- PLATTED LOT LINES
- P — PROPERTY (DEED) LINE
- APL — APPARENT PROPERTY LINE
- EXISTING CENTERLINE
- PROPOSED CENTERLINE
- EXISTING RIGHT OF WAY LINE
- PROPOSED RIGHT OF WAY LINE
- EXISTING EASEMENT
- PROPOSED EASEMENT
- AC — EXISTING ACCESS CONTROL LINE
- AC — PROPOSED ACCESS CONTROL LINE
- 129.32' MEASURED DIMENSION
- 129.32' (COMP) COMPUTED DIMENSION
- (129.32') RECORDED DIMENSION
- EXISTING BUILDING

BEARINGS ARE REFERENCED TO THE ILLINOIS STATE PLANE COORDINATE SYSTEM, NAD83 (2011) ADJUSTMENT, EAST ZONE.

- ○ IRON PIPE OR ROD FOUND
- ⊕ "MAG" NAIL SET
- \+ CUT CROSS FOUND OR SET
- ● 5/8" REBAR SET
- ■ STAKING OF PROPOSED RIGHT OF WAY. SET DIVISION OF HIGHWAYS SURVEY MARKER TO MONUMENT THE POSITION SHOWN. IDENTIFIED BY INSCRIPTION DATA AND SURVEYORS REGISTRATION NUMBER.
- ■ N STAKING OF PROPOSED RIGHT OF WAY IN CULTIVATED AREAS. BURIED 5/8 INCH METAL ROD 20 INCHES BELOW GROUND TO MARK FUTURE SURVEY MARKER POSITION IDENTIFIED BY COLORED PLASTIC CAP BEARING SURVEYORS REGISTRATION NUMBER.
- PERMANENT SURVEY MARKER, I.D.O.T. STANDARD 667101-02 (TO BE SET BY OTHERS)
- □ RIGHT OF WAY STAKING PROPOSED TO BE SET

STATE OF ILLINOIS)
) SS
COUNTY OF W.ILL)

THIS IS TO CERTIFY THAT I, KENNETH J. PESAVENTO, AN ILLINOIS PROFESSIONAL LAND SURVEYOR, (WE, RUETTIGER, TONELLI & ASSOCIATES, AN ILLINOIS PROFESSIONAL DESIGN FIRM LAND SURVEYING CORPORATION, NUMBER 184-001251,) HAVE SURVEYED THE PLAT OF HIGHWAYS SHOWN HEREON IN SECTIONS 5, TOWNSHIP 44 NORTH, RANGE 7 EAST OF THE THIRD PRINCIPAL MERIDIAN, McHENRY COUNTY, THAT THE SURVEY IS TRUE AND COMPLETE AS SHOWN TO THE BEST OF MY KNOWLEDGE AND BELIEF, THAT THE PLAT CORRECTLY REPRESENTS SAID SURVEY, THAT ALL MONUMENTS FOUND AND ESTABLISHED ARE OF PERMANENT QUALITY AND OCCUPY THE POSITIONS SHOWN THEREON AND THAT THE MONUMENTS ARE SUFFICIENT TO ENABLE THE SURVEY TO BE RETRACED, MADE FOR THE DEPARTMENT OF TRANSPORTATION, STATE OF ILLINOIS.

DATED AT SHOREWOOD, ILLINOIS THIS 28TH DAY OF JANUARY 2025 A.D.

ILLINOIS PROFESSIONAL LAND SURVEYOR NO. 3425
LICENSE EXPIRATION DATE: 11-30-2026

THIS PROFESSIONAL SERVICE CONFORMS TO THE CURRENT ILLINOIS MINIMUM STANDARDS FOR A BOUNDARY SURVEY.

KENNETH J. PESAVENTO 3425 PROFESSIONAL LAND SURVEYOR STATE OF ILLINOIS SHOREWOOD, ILLINOIS

PARCEL NUMBER	TOTAL HOLDINGS ACRES	PART TAKEN ACRES	AREA IN EXISTING R.O.W. ACRES	REMAINDER AREA ACRES	EASEMENT AREA ACRES	EASEMENT AREA SQUARE FEET	PARCEL INDEX NUMBER
1NUO081TE	C.831	0.00		0.831	C.012		13-05-478-019
1NUO082TE	3.331	0.00		3.331	0.042		13-05-478-017 13-05-478-018
1NUO086 1NUO086TE	0.300	0.049		0.251	0.056		13 05 470 007
1NUO088 1NUO088TE	2.200	0.017		2.183	0.016		13-05-478-002 13-05-478-012

SURVEY NOTES:
1. ALL DIMENSIONS ARE MEASURED UNLESS NOTED OTHERWISE.
2. BEARINGS, DISTANCES AND COORDINATES SHOWN HEREON REFERENCE THE ILLINOIS STATE PLANE COORDINATE SYSTEM, EAST ZONE, NAD83 (2011 ADJUSTMENT) "GRID".
3. ALL MEASURED AND CALCULATED DISTANCES AREA "GRID" NOT "GROUND". TO OBTAIN GROUND DISTANCES, DIVIDE GRID DISTANCES SHOWN BY THE SCALE FACTOR OF 0.9999376.
4. AREAS SHOWN ON THIS PLAT ARE "GROUND".
5. FIELD SURVEY COMPLETED ON MARCH 26, 2020.

REVISION DATE: / / REVISION MADE BY:

IDOT USE ONLY

Ruettiger, Tonelli & Associates, Inc.
Surveyors• Engineers • Planners • Landscape Architects • G.I.S. Consultants
125 CAPITOL DRIVE - SHOREWOOD, ILLINOIS 60404
PH.(815) 744-4600 FAX (815) 744-4601
website: www.ruettigertonelli.com

RT. & A. Dwg. No.: 2020-0163.00

PLAT OF HIGHWAYS
STATE OF ILLINOIS
DEPARTMENT OF TRANSPORTATION
ILLINOIS ROUTE 47

LIMITS: IL 120 TO US 14 — COUNTY: McHENRY
SECTION: — JOB NO.: R-91-019-17
STA. 172+00 TO STA. 175+79.79
SCALE: 1"=30' — SHEET 41 OF 57 SHEETS

BUREAU OF LAND ACQUISITION
201 WEST CENTER COURT
SCHAUMBURG, ILLINOIS 60196

FOR REFERENCE ONLY - N.T.S.

AECOM
303 EAST WACKER DRIVE, SUITE 1400
CHICAGO, IL 60601-5276
PHONE: (312) 373-7700 FAX: (312) 373-6800

USER NAME = muniza	DESIGNED -	REVISED -	
	DRAWN -	REVISED -	
PLOT SCALE = 100.0000 ' / in.	CHECKED -	REVISED -	
PLOT DATE = 2/7/2025	DATE -	REVISED -	

STATE OF ILLINOIS
DEPARTMENT OF TRANSPORTATION

SCALE: | SHEET OF SHEETS | STA. TO STA.

F.A.P. RTE.	SECTION	COUNTY	TOTAL SHEETS	SHEET NO.
326	2024-1052-N,C,SW,FL	MCHENRY	941	612
		CONTRACT NO. 62X94		
		ILLINOIS FED. AID PROJECT		

MODEL: Default
FILE NAME: pw:\\aecom-na-pw.bentley.com:AECOM_DS21_NA_2020\Documents\60632011-IL-47\900-CAD\910_CAD\03_SHEETS\General\D160X17-sht-PLAT.dgn

PART OF SE 1/4 OF SECTION 5 TWP.44N., R.7E. OF THE 3RD. P.M., IN McHENRY COUNTY, ILLINOIS.

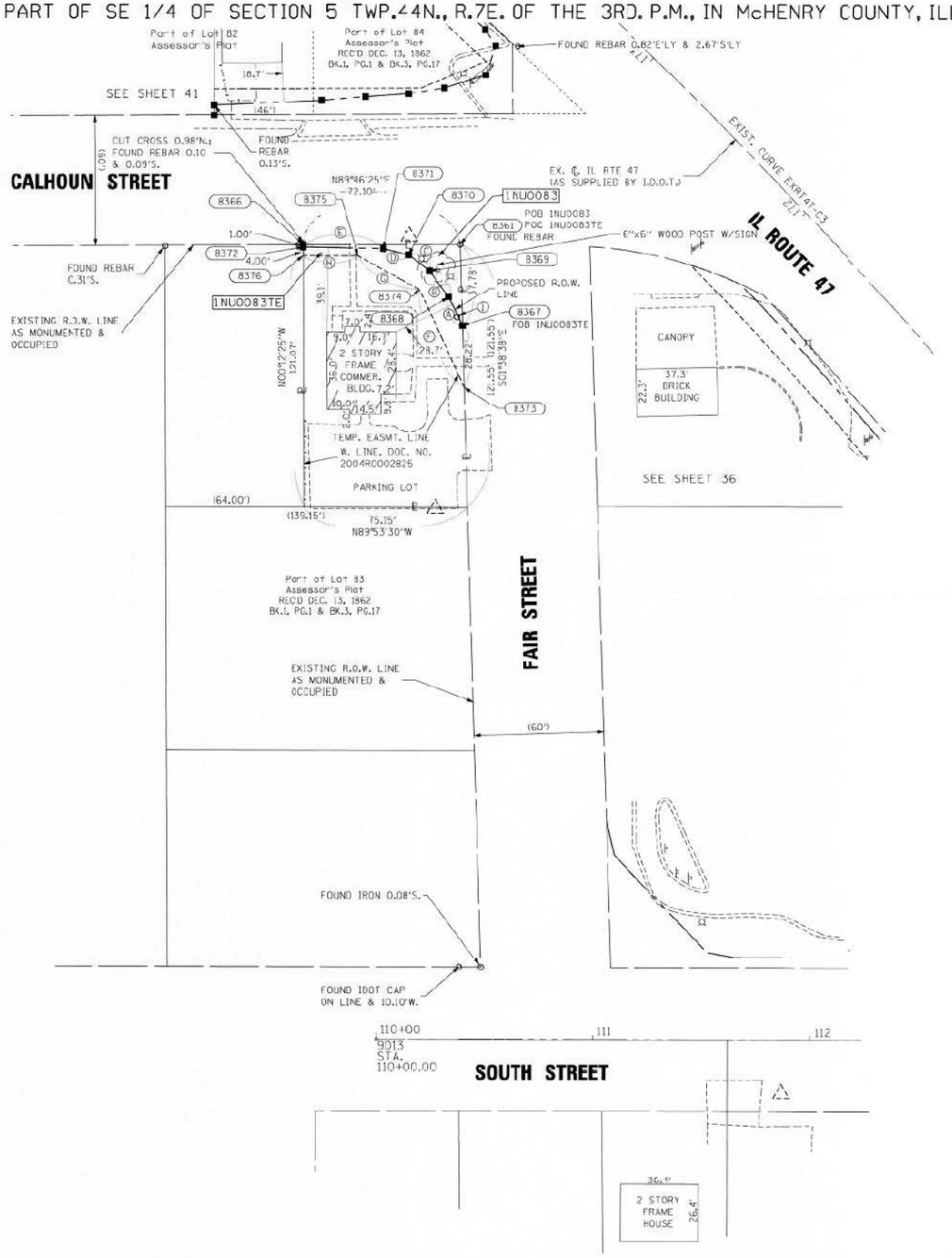

(A)	N25°43'50"W	5.00'
(B)	N35°30'34"W	5.00'
(C)	N52°30'04"N	2.00'
(D)	N76°22'52"W	12.00'
(E)	N89°01'28"W	36.78'
(F)	N24°43'14"W	50.00'
(G)	N61°17'39"W	32.00'
(H)	S89°46'25"W	25.00'
(I)	FOUND REBAR 2.50'E.	

LEGEND

SECTION CORNER; 1/4 QUARTER SECTION CORNER

- SECTION / QUARTER SECTION LINE
- PLATTED LOT LINES
- PROPERTY (DEED) LINE
- APPARENT PROPERTY LINE
- EXISTING CENTERLINE
- PROPOSED CENTERLINE
- EXISTING RIGHT OF WAY LINE
- PROPOSED RIGHT OF WAY LINE
- EXISTING EASEMENT
- PROPOSED EASEMENT
- EXISTING ACCESS CONTROL LINE
- PROPOSED ACCESS CONTROL LINE
- 129.32' MEASURED DIMENSION
- 129.32' (COMP) COMPUTED DIMENSION
- (129.32') RECORDED DIMENSION
- EXISTING BUILDING

GRAPHIC SCALE FEET; SCALE: 1"=30'

BEARINGS ARE REFERENCED TO THE ILLINOIS STATE PLANE COORDINATE SYSTEM,NAD83 (2011 ADJUSTMENT),EAST ZONE.

- ○ IRON PIPE OR ROD FOUND
- ⊕ "NAG" NAIL SET
- \+ CUT CROSS FOUND OR SET
- ● 5/8"REBAR SET
- ■ STAKING OF PROPOSED RIGHT OF WAY. SET DIVISION OF HIGHWAYS SURVEY MARKER TO MONUMENT THE POSITION SHOWN. IDENTIFIED BY INSCRIPTION DATA AND SURVEYORS REGISTRATION NUMBER.
- ■ N STAKING OF PROPOSED RIGHT OF WAY IN CULTIVATED AREAS. BURIED 5/8 INCH METAL ROD 20 INCHES BELOW GROUND TO MARK FUTURE SURVEY MARKER POSITION IDENTIFIED BY COLORED PLASTIC CAP BEARING SURVEYORS REGISTRATION NUMBER.
- ◒ PERMANENT SURVEY MARKER, I.D.O.T. STANDARD 667101-02 (TO BE SET BY OTHERS)
- □ RIGHT OF WAY STAKING PROPOSED TO BE SET

PROJECT COORDINATES
Illinois State Plane, East Zone, NAD83 (2011)
EXISTING CENTERLINE, IL ROUTE 47

PT#	STATION	OFFSET	NORTH	EAST
8361	173+03.37	-124.37	2056555.787	956468.321
8366	173+59.33	-174.35	2056555.502	956396.221
8367	172+75.33	-150.48	2056918.022	956469.405
8368	172+60.39	145.48	2056931.535	956462.893
8369	173+05.78	-142.86	2056943.745	956454.180
8370	173+38.45	-164.25	2056951.050	956444.660
8371	173+29.89	-150.29	2056953.876	956432.997
8372	173+58.59	-175.08	2056954.502	956396.225
8373	172+52.38	-169.77	2056889.814	956470.214
8374	173+03.17	-152.36	2056935.232	956449.305
8375	173+16.16	-160.77	2056950.601	956421.239
8376	173+55.54	-177.99	2056950.502	956396.240

EXIST. CURVE EXRT47-C3
PI STA. = 169+36.37
Δ = 33° 26' 07" (LT)
D = 2° 20' 59"
R = 2,438.29'
T = 505.73'
L = 997.32'
E = 51.90'
e = -----
T.R. = -----
S.E. RUN = -----
P.C. STA. = 164+30.63
P.T. STA. = 174+27.96

STATE OF ILLINOIS)
) SS
COUNTY OF WILL)

THIS IS TO CERTIFY THAT I, KENNETH J. PESAVENTO, AN ILLINOIS PROFESSIONAL LAND SURVEYOR, (WE, RUETTIGER, TONELLI & ASSOCIATES, AN ILLINOIS PROFESSIONAL DESIGN FIRM LAND SURVEYING CORPORATION, NUMBER 184-001251,) HAVE SURVEYED THE PLAT OF HIGHWAYS SHOWN HEREON IN SECTIONS 5, TOWNSHIP 44 NORTH, RANGE 7 EAST OF THE THIRD PRINCIPAL MERIDIAN, McHENRY COUNTY, THAT THE SURVEY IS TRUE AND COMPLETE AS SHOWN TO THE BEST OF MY KNOWLEDGE AND BELIEF, THAT THE PLAT CORRECTLY REPRESENTS SAID SURVEY, THAT ALL MONUMENTS FOUND AND ESTABLISHED ARE OF PERMANENT QUALITY AND OCCUPY THE POSITIONS SHOWN THEREON AND THAT THE MONUMENTS ARE SUFFICIENT TO ENABLE THE SURVEY TO BE RETRACED, MADE FOR THE DEPARTMENT OF TRANSPORTATION, STATE OF ILLINOIS.

DATED AT SHOREWOOD, ILLINOIS THIS 28TH DAY OF JANUARY 2025 A.D.

ILLINOIS PROFESSIONAL LAND SURVEYOR NO. 3425
LICENSE/EXPIRATION DATE: 11-30-2026

THIS PROFESSIONAL SERVICE CONFORMS TO THE CURRENT ILLINOIS MINIMUM STANDARDS FOR A BOUNDARY SURVEY.

KENNETH J. PESAVENTO 3425 PROFESSIONAL LAND SURVEYOR STATE OF ILLINOIS SHOREWOOD, ILLINOIS

PARCEL NUMBER	TOTAL HOLDINGS ACRES	PART TAKEN ACRES	AREA IN EXISTING R.O.W. ACRES	REMAINDER AREA ACRES	EASEMENT AREA ACRES	EASEMENT AREA SQUARE FEET	PARCEL INDEX NUMBER
1NJ00083 1NJ00083TE	0.205	0.012		0.193	0.019		13-05-456-060

SURVEY NOTES:
1. ALL DIMENSIONS ARE MEASURED UNLESS NOTED OTHERWISE.
2. BEARINGS, DISTANCES AND COORDINATES SHOWN HEREON REFERENCE THE ILLINOIS STATE PLANE COORDINATE SYSTEM, EAST ZONE, NAD83 (2011 ADJUSTMENT) 'GRID'.
3. ALL MEASURED AND CALCULATED DISTANCES AREA "GRID" NOT "GROUND". TO OBTAIN GROUND DISTANCES, DIVIDE GRID DISTANCES SHOWN BY THE SCALE FACTOR OF 0.99993761.
4. AREAS SHOWN ON THIS PLAT ARE "GROUND".
5. FIELD SURVEY COMPLETED ON MARCH 25, 2020.

REVISION DATE: / / REVISION MADE BY:

IDOT USE ONLY

Ruettiger, Tonelli & Associates, Inc.
Surveyors • Engineers • Planners • Landscape Architects • G.I.S. Consultants
129 CAPISTA DRIVE - SHOREWOOD, ILLINOIS 60404
PH. (815) 744-6600 FAX (815) 744-6611
website: www.ruettigertonelli.com

R.T. & A. Dwg. No.: 2020-0163.00

PLAT OF HIGHWAYS
STATE OF ILLINOIS
DEPARTMENT OF TRANSPORTATION
ILLINOIS ROUTE 47

LIMITS: IL 120 TO US 14 COUNTY: McHENRY
SECTION: JOB NO.: R-91-019-17
STA. 172+00 TO STA. 175+00
SCALE: 1"=30' SHEET 42 OF 67 SHEETS

BUREAU OF LAND ACQUISITION
201 WEST CENTER COURT
SCHAUMBURG, ILLINOIS 60196

FOR REFERENCE ONLY - N.T.S.

AECOM
303 EAST WACKER DRIVE, SUITE 1400
CHICAGO, IL 60601-5276
PHONE: (312) 373-7700 FAX: (312) 373-6800

USER NAME = muniza	DESIGNED -	REVISED -	
	DRAWN -	REVISED -	
PLOT SCALE = 100.0000 ' / in.	CHECKED -	REVISED -	
PLOT DATE = 2/7/2025	DATE -	REVISED -	

STATE OF ILLINOIS
DEPARTMENT OF TRANSPORTATION

SCALE: SHEET OF SHEETS STA. TO STA.

F.A.P. RTE.	SECTION	COUNTY	TOTAL SHEETS	SHEET NO.
326	2024-1052-N,C,SW,FL	MCHENRY	941	613
		CONTRACT NO. 62X94		
		ILLINOIS	FED. AID PROJECT	

MODEL: Default
FILE NAME: pw:\\aecom-na-pw.bentley.com:AECOM D521 NA 2020\Documents\60632011-IL-47(900-CAD)910 CAD\03 SHEETS\General\D160X17-sht-PLAT.dgn

PART OF SE 1/4 OF SECTION 5 TWP. 44N., R.7E. OF THE 3RD. P.M., IN McHENRY COUNTY, ILLINOIS.

PROJECT COORDINATES
Illinois State Plane, East Zone, NAD83 (2011)
EXISTING CENTERLINE IL ROUTE 47

PTR	STATION	OFFSET	NORTH	EAST
8105	183+22.04	-36.90	2057491.961	955992.206
8107	175+38.68	-40.65	2057171.909	956354.344
8121	183+42.88	40.13	2057505.780	956029.490
8137	175+48.17	39.36	2057258.114	956400.128
9317	175+79.79	75.00	2057285.754	956399.573
9318	175+62.62	55.65	2057259.886	956400.057
9320	175+98.93	75.00	2057298.412	956385.610
9321	175+98.91	52.00	2057281.141	956370.420
9322	176+26.17	67.00	2057310.419	956359.886
9325	180+42.86	52.00	2057574.672	956037.352
9326	180+47.84	67.00	2057585.910	956047.288
9551	175+30.39	50.00	2057159.316	956354.385
9552	175+35.20	-44.58	2057166.560	956334.361
9556	178+02.00	-50.00	2057338.899	956150.612
9557	178+02.00	-70.00	2057323.894	956137.389
9558	178+72.00	70.00	2057370.175	956084.872
9559	178+72.00	-50.00	2057385.181	956098.096
9560	183+22.38	-50.00	2057484.610	955985.275
9561	183+22.20	-44.58	2057488.555	955988.995

PARCEL NUMBER	TOTAL HOLDINGS ACRES	PART TAKEN ACRES	AREA IN EXISTING R.O.W. ACRES	REMAINDER AREA ACRES	EASEMENT AREA ACRES	EASEMENT AREA SQUARE FEET	PARCEL INDEX NUMBER
1NUOOB7 1NUOOB7TE	2.081	0.048		2.033	0.093		13-05-476-010
1NUOOB9 1NUOOB9TE	2.365	0.139		2.226	0.169		13-05-481-031 13-05-481-002

SURVEY NOTES:
1. ALL DIMENSIONS ARE MEASURED UNLESS NOTED OTHERWISE.
2. BEARINGS, DISTANCES AND COORDINATES SHOWN HEREON REFERENCE THE ILLINOIS STATE PLANE COORDINATE SYSTEM, EAST ZONE, NAD83 (2011 ADJUSTMENT) 'GRID'.
3. ALL MEASURED AND CALCULATED DISTANCES ARE 'GRID' NOT "GROUND". TO OBTAIN GROUND DISTANCES, DIVIDE GRID DISTANCES SHOWN BY THE SCALE FACTOR OF 0.99993761.
4. AREAS SHOWN ON THIS PLAT ARE "GROUND".
5. FIELD SURVEY COMPLETED ON MARCH 26, 2020.

LEGEND

- SECTION CORNER
- QUARTER SECTION CORNER
- SECTION / QUARTER SECTION LINE
- PLATTED LOT LINES
- PROPERTY (DEED) LINE
- APPARENT PROPERTY LINE
- EXISTING CENTERLINE
- PROPOSED CENTERLINE
- EXISTING RIGHT OF WAY LINE
- PROPOSED RIGHT OF WAY LINE
- EXISTING EASEMENT
- PROPOSED EASEMENT
- EXISTING ACCESS CONTROL LINE
- PROPOSED ACCESS CONTROL LINE
- 129.22' MEASURED DIMENSION
- 129.32' (COMP) COMPUTED DIMENSION
- (129.22') RECORDED DIMENSION
- EXISTING BUILDING

GRAPHIC SCALE FEET
SCALE: 1"=30'

BEARINGS ARE REFERENCED TO THE ILLINOIS STATE PLANE COORDINATE SYSTEM, NAD83 (2011 ADJUSTMENT), EAST ZONE.

- IRON PIPE OR ROD FOUND
- CUT CROSS FOUND OR SET
- ⊕ "MAG" NAIL SET
- ● 5/8" REBAR SET
- ■ STAKING OF PROPOSED RIGHT OF WAY. SET DIVISION OF HIGHWAYS SURVEY MARKER TO MONUMENT THE POSITION SHOWN. IDENTIFIED BY INSCRIPTION DATA AND SURVEYORS REGISTRATION NUMBER.
- ■ M STAKING OF PROPOSED RIGHT OF WAY IN CULTIVATED AREAS. BURIED 5/8 INCH METAL ROD 20 INCHES BELOW GROUND TO MARK FUTURE SURVEY MARKER POSITION IDENTIFIED BY COLORED PLASTIC CAP BEARING SURVEYORS REGISTRATION NUMBER.
- PERMANENT SURVEY MARKER, I.D.O.T. STANDARD 667101-02 (TO BE SET BY OTHERS)
- RIGHT OF WAY STAKING PROPOSED TO BE SET

STATE OF ILLINOIS)
)SS
COUNTY OF WILL)

THIS IS TO CERTIFY THAT I, KENNETH J. PESAVENTO, AN ILLINOIS PROFESSIONAL LAND SURVEYOR, (WE, RUETTIGER, TONELLI & ASSOCIATES, AN ILLINOIS PROFESSIONAL DESIGN FIRM LAND SURVEYING CORPORATION, NUMBER 184-001251,) HAVE SURVEYED THE PLAT OF HIGHWAYS SHOWN HEREON IN SECTION 5, TOWNSHIP 44 NORTH, RANGE 7 EAST OF THE THIRD PRINCIPAL MERIDIAN, McHENRY COUNTY, THAT THE SURVEY IS TRUE AND COMPLETE AS SHOWN TO THE BEST OF MY KNOWLEDGE AND BELIEF, THAT THE PLAT CORRECTLY REPRESENTS SAID SURVEY, THAT ALL MONUMENTS FOUND AND ESTABLISHED ARE OF PERMANENT QUALITY AND OCCUPY THE POSITIONS SHOWN THEREON AND THAT THE MONUMENTS ARE SUFFICIENT TO ENABLE THE SURVEY TO BE RETRACED. MADE FOR THE DEPARTMENT OF TRANSPORTATION, STATE OF ILLINOIS.

DATED AT SHOREWOOD, ILLINOIS THIS 28TH DAY OF JANUARY 2025 A.D.

KENNETH J. PESAVENTO
ILLINOIS PROFESSIONAL LAND SURVEYOR NO. 3425
LICENSE EXPIRATION DATE: 11-30-2026

THIS PROFESSIONAL SERVICE CONFORMS TO THE CURRENT ILLINOIS MINIMUM STANDARDS FOR A BOUNDARY SURVEY.

KENNETH J. PESAVENTO 3425 PROFESSIONAL LAND SURVEYOR STATE OF ILLINOIS SHOREWOOD, ILLINOIS

Ruettiger, Tonelli & Associates, Inc.
Surveyors • Engineers • Planners • Landscape Architects • GIS...consultants
129 CAPITAL DRIVE • SHOREWOOD, ILLINOIS 60404
PH. 815.744.6400 FAX (815) 744.6031
website: www.ruettigertonelli.com

R.T. & A. Dwg. No.: 2020-0163.00

PLAT OF HIGHWAYS
STATE OF ILLINOIS
DEPARTMENT OF TRANSPORTATION
ILLINOIS ROUTE 47

LIMITS: IL 120 TO US 14 — COUNTY: McHENRY
SECTION: — JOB NO.: R-9-019-17
STA. 175+30.39 TO STA. 180+42.88
SCALE: 1"=30' — SHEET 43 OF 47 SHEETS

IDOT USE ONLY

BUREAU OF LAND ACQUISITION
201 WEST CENTER COURT
SCHAUMBURG, ILLINOIS 60196

REVISION DATE: / / REVISION MADE BY:

FOR REFERENCE ONLY - N.T.S.

AECOM
303 EAST WACKER DRIVE, SUITE 1400
CHICAGO, IL 60601-5276
PHONE: (312) 373-7700 FAX: (312) 373-6800

USER NAME = muniza	DESIGNED -	REVISED -
	DRAWN -	REVISED -
PLOT SCALE = 100.0000 ' / in.	CHECKED -	REVISED -
PLOT DATE = 2/7/2025	DATE -	REVISED -

STATE OF ILLINOIS
DEPARTMENT OF TRANSPORTATION

SCALE: | SHEET OF SHEETS | STA. TO STA.

F.A.P. RTE.	SECTION	COUNTY	TOTAL SHEETS	SHEET NO.
326	2024-1052-N,C,SW,FL	MCHENRY	941	614
		CONTRACT NO. 62X94		
	ILLINOIS FED. AID PROJECT			

MODEL: Default
FILE NAME: pw:\\aecom-na-pw.bentley.com:AECOM_DS21_NA_2020\Documents\60632011-IL-47900-CAD\910_CAD\03_SHEETS\General\D160X17-sht-PLAT.dgn

PART OF SE 1/4 OF SECTION 5 TWP.44N., R.7E. OF THE 3RD. P.M., IN McHENRY COUNTY, ILLINOIS.

PROP. CURVE RA10JUDD-C1
PI STA. = 1000+34.80
Δ = 7° 35' 55" (LT)
D = 10° 56' 03"
R = 524.00'
T = 34.80'
L = 69.49'
E = 1.15'
e = -----
T.R. = -----
S.E. RUN = -----
P.C. STA = 1000+00.00
P.T. STA = 1000+69.49

PROP. CURVE RA10JUDD-C2
PI STA. = 1001+59.49
Δ = 45° 24' 34" (RT)
D = 67° 24' 22"
R = 85.00'
T = 35.56'
L = 67.37'
E = 7.14'
e = -----
T.R. = -----
S.E. RUN = -----
P.C. STA = 1001+23.93
P.T. STA = 1001+91.29

PROP. CURVE RA10JUDD-C3
PI STA. = 1002+11.13
Δ = 4° 32' 37" (RT)
D = 11° 27' 33"
R = 500.00'
T = 19.84'
L = 39.65'
E = 0.39'
e = -----
T.R. = -----
S.E. RUN = -----
P.C. STA = 1001+91.29
P.T. STA = 1002+30.95

PROP. CURVE RA10JUDD-C4
PI STA. = 1002+46.19
Δ = 21° 34' 20" (RT)
D = 71° 37' 11"
R = 80.00'
T = 15.24'
L = 30.12'
E = 1.44'
e = -----
T.R. = -----
S.E. RUN = -----
P.C. STA = 1002+30.95
P.T. STA = 1002+61.07

PROP. CURVE RA10JUDD-C5
PI STA. = 1003+42.51
Δ = 15° 27' 33" (LT)
D = 9° 32' 57"
R = 600.00'
T = 81.44'
L = 161.89'
E = 5.50'
e = -----
T.R. = -----
S.E. RUN = -----
P.C. STA = 1002+61.07
P.T. STA = 1004+22.95

PROJECT COORDINATES
Illinois State Plane, East Zone, NAD83 (2011)
PROPOSED CENTERLINE, RA10 JUDD STREET

PT#	STATION	OFFSET	NORTH	EAST
8120	1003+20.78	24.29	2057821.748	955909.389
9323	1000+61.70	37.89	2057640.235	955985.645
9324	1000+63.39	23.00	2057628.982	955975.727
9329	1001+65.17	28.04	2057687.259	955909.601
9330	1001+26.06	31.24	2057670.443	955928.682
9331	1001+58.17	35.15	2057711.347	955909.563
9333	1003+21.76	30.21	2057821.775	955915.389
9334	1003+34.42	110.00	2057822.181	956006.333
9335	1000+77.42	113.45	2057873.803	956005.333
9339	1004+20.42	48.14	2057924.923	955941.884
9340	1004+20.84	21.48	2057925.374	955915.225
9342	1004+25.77	15.48	2057930.363	955909.238
9343	1004+25.76	21.48	2057930.373	955915.238
9779	1004+42.30	0.00	2057946.631	955893.676
9780	1004+22.95	0.00	2057927.487	955893.745
9782	1002+61.07	0.00	2057767.479	955872.613
9784	1002+30.94	0.00	2057737.627	955870.281
9786	1001+91.29	0.00	2057698.432	955876.212
9788	1001+23.93	0.00	2057643.717	955912.423
9789	1000+69.49	0.00	2057613.441	955957.661
9791	1000+00.00	0.00	2057571.083	956012.688

PROP. CURVE RA11JUDD-C1
PI STA. = 400+33.20
Δ = 7° 35' 56" (LT)
D = 11° 27' 33"
R = 500.00'
T = 33.20'
L = 66.31'
E = 1.10'
e = -----
T.R. = -----
S.E. RUN = -----
P.C. STA = 400+00.00
P.T. STA = 400+66.31

PROP. CURVE RA8JUDD-C1
PI STA. = 501+59.39
Δ = 58° 18' 45" (LT)
D = 50° 15' 35"
R = 114.00'
T = 63.60'
L = 116.02'
E = 16.54'
e = -----
T.R. = -----
S.E. RUN = -----
P.C. STA = 500+95.79
P.T. STA = 502+11.81

PROP. CURVE RA9JUDD-C1
PI STA. = 751+70.62
Δ = 15° 26' 12" (LT)
D = 9° 32' 57"
R = 600.00'
T = 81.32'
L = 161.65'
E = 5.49'
e = -----
T.R. = -----
S.E. RUN = -----
P.C. STA = 750+89.50
P.T. STA = 752+51.15

PROJECT COORDINATES
Illinois State Plane, East Zone, NAD83 (2011)
EXISTING CENTERLINE, IL ROUTE 47

PT#	STATION	OFFSET	NORTH	EAST
8119	182+02.87	40.38	2057671.748	955909.625
8121	180+42.88	40.13	2057585.780	955929.490
9017	182+05.75	0.00	2057643.355	955880.769
9323	181+25.00	67.00	2057640.235	955985.645
9324	181+25.00	52.00	2057628.982	955975.727
9325	180+42.86	52.00	2057541.672	956037.352
9326	180+42.84	67.00	2057585.510	956047.288
9329	182+13.16	52.00	2057687.259	955909.601
9330	181+87.71	52.00	2057670.443	955928.682
9331	182+29.10	70.05	2057711.347	955909.563
9749	183+48.47	9.10	2057744.542	955779.710
9752	183+74.75	94.65	2057826.104	955816.558
9753	183+17.21	52.96	2057786.799	955858.906
9754	182+68.74	26.01	2057704.523	955850.709
9755	182+81.25	-36.55	2057665.856	955799.955
9762	182+03.93	87.73	2057787.479	955872.613
9784	182+75.94	63.79	2057737.627	955870.281
9786	182+45.56	38.30	2057698.432	955876.202
9788	181+82.26	21.30	2057643.717	955912.423
9789	181+28.28	28.40	2057613.444	955957.661
9791	180+58.99	33.00	2057571.083	956012.688
9792	180+58.99	9.00	2057553.077	955996.820
9793	181+26.11	4.61	2057603.498	955944.313
9794	181+79.06	-2.59	2057623.772	955889.076
9795	182+60.19	19.25	2057693.793	955852.555
9796	180+69.95	-9.00	2057546.822	955976.694
9798	180+96.74	-33.45	2057546.192	955940.430

PROP. CURVE RA7JUDD-C1
PI STA. = 1101+94.87
Δ = 55° 55' 50" (RT)
D = 63° 39' 43"
R = 90.00'
T = 47.78'
L = 87.86'
E = 11.90'
e = -----
T.R. = -----
S.E. RUN = -----
P.C. STA = 1101+47.08
P.T. STA = 1102+34.94

PROP. CURVE RA12JUDD-C1
PI STA. = 451+07.45
Δ = 14° 51' 30" (LT)
D = 6° 57' 12"
R = 824.00'
T = 107.45'
L = 213.68'
E = 6.38'
e = -----
T.R. = -----
S.E. RUN = -----
P.C. STA = 450+00.00
P.T. STA = 452+13.68

PROJECT COORDINATES
Illinois State Plane, East Zone, NAD83 (2011)
PROPOSED CENTERLINE, RA7 JUDD STREET

PT#	STATION	OFFSET	NORTH	EAST
9769	1102+34.94	0.00	2057850.766	955811.329
9771	1101+47.08	0.00	2057922.507	955885.804
9772	1100+06.00	0.00	2058069.263	955865.532

PROPOSED CENTERLINE, RA8 JUDD STREET

PT#	STATION	OFFSET	NORTH	EAST
9749	500+00.00	0.00	2057744.542	955779.710
9752	500+85.50	0.00	2057826.104	955816.558
9776	502+11.81	0.00	2057924.369	955879.345
9778	500+95.79	0.00	2057829.227	955822.016

PROPOSED CENTERLINE, RA9 JUDD STREET

PT#	STATION	OFFSET	NORTH	EAST
9749	750+00.00	0.00	2057744.542	955779.710
9753	750+85.50	0.00	2057786.799	955858.906
9773	753+73.78	0.00	2058069.710	955879.736
9774	752+51.15	0.00	2057946.580	955879.677
9997	754+73.78	0.00	2058169.209	955878.876

PROJECT COORDINATES
Illinois State Plane, East Zone, NAD83 (2011)
PROPOSED CENTERLINE, RA11 JUDD STREET

PT#	STATION	OFFSET	NORTH	EAST
9017	401+47.83	2.88	2057643.355	955880.769
9749	402+99.39	0.00	2057744.542	955779.710
9754	402+17.89	0.00	2057704.523	955850.709
9752	400+00.00	0.00	2057553.077	955996.820
9753	400+66.31	0.00	2057593.498	955944.313
9704	401+20.74	0.00	2057623.772	955889.076
9755	402+06.99	0.00	2057693.793	955852.655

PROPOSED CENTERLINE, RA11 JUDD STREET

PT#	STATION	OFFSET	NORTH	EAST
9749	452+94.93	0.00	2057744.542	955779.710
9755	452+13.68	0.00	2057665.856	955799.955
9796	450+00.00	0.00	2057546.822	955976.694

PARCEL NUMBER	TOTAL HOLDINGS ACRES	PART TAKEN ACRES	AREA IN EXISTING R.O.W. ACRES	REMAINDER AREA ACRES	EASEMENT AREA ACRES	EASEMENT AREA SQUARE FEET	PARCEL INDEX NUMBER
1NUO090 1NUO090TE-A 1NUO090TE-B	0.963	0.045		0.918	A=0.005 B=0.028	A=229 B=N/A	13-05-478-006
1NUO091 1NUO091TE	6.677	0.015		6.362	0.176		13-05-478-009 13-05-426-003 13-05-426-004 13-05-478-026

SURVEY NOTES:
1. ALL DIMENSIONS ARE MEASURED UNLESS NOTED OTHERWISE.
2. BEARINGS, DISTANCES AND COORDINATES SHOWN HEREON REFERENCE THE ILLINOIS STATE PLANE COORDINATE SYSTEM, EAST ZONE, NAD83 (2011 ADJUSTMENT) GRID'.
3. ALL MEASURED AND CALCULATED DISTANCES AREA "GRID" NOT "GROUND". TO OBTAIN GROUND DISTANCES, DIVIDE GRID DISTANCES SHOWN BY THE SCALE FACTOR OF 0.9999376I.
4. AREAS SHOWN ON "THIS PLAT ARE "GROUND".
5. FIELD SURVEY COMPLETED ON MARCH 26, 2020.

IRVING AVENUE
JUDD ST.
IL ROUTE 47
FOUND PIPE 0.15'N. & 0.19'E.
FOUND REBAR 0.21'N. & 0.06'W.
EX. R.O.W. LINE AS MONUMENTED & OCCUPIED
DOC. 2010R0029041
PROPOSED R.O.W. LINE
TEMPORARY EASMT. LINE
POB 1NUO091TE
POC 1NUO091TE
POB 1NUO091
POC 1NUO090TE-A
POB 1NUO090
POB 1NUO090TE-A
POC 1NUO090TE-B
POB 1NUO090TE-B
FOUND IRON
FOUND IRON 0.56'E.
FOUND IRON 0.19'S'LY & 0.79'E'LY
FOUND REBAR 0.07'E. & 0.08'N.
FOUND REBAR
FOUND IRON
FOUND IRON 0.31'E.
DOC. 2003R0148859
1 STORY BRICK BLDG.
1.2' WIDE METAL SIGN
EX. ℄ IL RTE 47 (AS SUPPLIED BY I.D.O.T.)
EX. R.O.W. LINE PER DOC. NO. 1936R0113673
CANOPY
POST OF LOT 32 ASSESSOR'S PLAT RECD IN BK. 3, PG. 1862 RE-RECD DECEMBER 13, 1962 IN BK. 3, PG. 17
SEE SHEET 46
SEE SHEET 45
SEE SHEET 43
Lot 79
9017 PI STA. 182+05.75
8119
8120
8121
9323
9324
9325
9326
9329
9330
9331
9333
9334
9335
9339
9340
9342
9343
9749
9752
9753
9754
9755
9762
9769
9771
9772
9773
9774
9776
9778
9779
9780
9782
9784
9786
9788
9789
9791
9792
9793
9794
9795
9796
9798
3121
3734
3736
1NUO091
1NUO091TE
1NUO090
1NUO090TE-A
1NUO090TE-B
RA10JUDD-C1
RA10JUDD-C2
RA10JUDD-C3
RA10JUDD-C4
RA10JUDD-C5
RA8JUDD-C1
RA9JUDD-C1
RA11JUDD-C1
RA12JUDD-C1
RA7JUDD-C1
N89°03'50"W 500.00'
S89°03'50"E 11.24'
N00°05'25"W 435.60'
S00°05'25"E 435.60' (435.60')
N89°54'28"E 130.21' (130')
S49°07'10"E 162.37' (162.27')
S88°58'28"E 120.82' (121.5')
S49°07'53"E 36.70' (36.97')
N41°29'52"E 28.32'
N41°23'55"E 34.17' (33.87')
N41°23'22"E 15.00'
S48°36'38"E 82.17'
N48°36'38"W 159.39' (159.39')
N41°23'22"E 170.28'
S41°23'22"W 200.60' (200')
N41°29'52"E 215.38' (216.61')
N00°11'12"W 1156.33'
S00°00'00"W 51.62'
S25°03'07"E 45.15'
N89°01'48"E 26.65'
S51°03'31"E 81.16'
N89°54'35"E 0.00'
N 61° 49' 35" E
N 60° 39' 31" W
N 48° 36' 38" W
N 66° 12' 29" W
S 23° 49' 55" W
N 14° 22' 54" W
N 66° 12' 29" W
S 66° 12' 29" E
N 23° 47' 31" W
S 66° 12' 29" E
N 23° 47' 31" W
S 23° 47' 31" E
N 66° 12' 29

PART OF SE 1/4 OF SECTION 5 TWP.44N., R.7E. OF THE 3RD. P.M., IN McHENRY COUNTY, ILLINOIS.

PROJECT COORDINATES
Illinois State Plane, East Zone, NAD83 (2011)
EXISTING CENTERLINE, IL ROUTE 47

PT#	STATION	OFFSET	NORTH	EAST
8104	181+32.04	-39.73	2057564.819	955909.793
8114	183+03.81	-48.80	2057671.585	955774.935
8115	184+42.65	-39.25	2057770.547	955677.085
8117	183+76.49	-113.66	2057670.970	955677.523
8118	183+11.99	-39.45	2057683.967	955775.020
8338	182+08.35	-44.01	2057612.657	955849.719
8339	182+03.41	-39.62	2057612.098	955856.313
9017	182+05.75	0.00	2057645.555	955880.769
9567	181+18.30	-55.27	2057544.072	955909.826
9568	181+26.06	-86.49	2057555.791	955909.808
9570	182+26.57	-90.28	2057611.902	955825.295
9571	182+52.98	-83.79	2057611.679	955789.987
9572	183+13.76	-138.10	2057611.164	955708.424
9573	183+11.76	-140.34	2057608.164	955708.442
9583	184+46.57	-142.70	2057695.521	955605.745
9584	184+52.59	-111.44	2057722.968	955621.900
9585	184+51.09	-52.00	2057766.359	955662.323
9586	184+06.33	-50.88	2057796.644	955626.874
9587	184+96.11	-39.17	2057805.423	955637.635
9588	184+53.05	-39.22	2057781.414	955664.793
9589	184+41.47	-54.33	2057758.446	955667.989
9590	184+42.01	-154.15	2057683.919	955601.601
9749	183+48.47	9.10	2057744.542	955779.710
9750	184+25.12	2.99	2057790.705	955718.091
9751	184+13.36	58.02	2057834.175	955764.765
9752	183+74.75	94.65	2057826.104	955816.558
9753	183+17.21	92.96	2057786.793	955858.606
9754	182+68.34	26.01	2057704.523	955850.709
9755	182+81.35	-36.55	2057665.856	955799.955
9756	183+59.48	-74.21	2057689.325	955716.369
9757	183+90.75	-60.40	2057720.360	955702.035
9759	184+33.52	9.68	2057801.213	955716.282
9761	185+00.51	31.03	2057861.524	955680.143
9762	185+34.33	29.19	2057882.503	955653.556
9818	185+05.34	8.73	2057847.992	955661.777
9819	185+33.13	7.22	2057865.232	955639.928

PROJECT COORDINATES
Illinois State Plane, East Zone, NAD83 (2011)
PROPOSED CENTERLINE, RA2 JUDD STREET

PT#	STATION	OFFSET	NORTH	EAST
9749	702+76.75	0.00	2057744.542	955779.710
9756	701+92.72	0.00	2057589.325	955716.369
9806	700+00.00	0.00	2057539.845	955533.279
9807	700+13.73	0.00	2057539.682	955547.004
9808	701+23.06	0.00	2057669.306	955650.897
9809	701+32.43	0.00	2057674.197	955658.885

PROPOSED CENTERLINE, RA3 JUDD STREET

PT#	STATION	OFFSET	NORTH	EAST
9749	752+71.80	0.00	2057744.542	955779.710
9757	751+91.45	0.00	2057720.360	955702.035
9806	750+00.00	0.00	2057639.845	955533.279
9810	751+51.29	0.00	2057693.457	955672.210

PROPOSED CENTERLINE, RA4 JUDD STREET

PT#	STATION	OFFSET	NORTH	EAST
8114	1201+74.40	109.98	2057671.585	955774.935
8115	1202+33.51	-18.70	2057770.547	955677.085
8117	1201+29.70	36.78	2057670.976	955677.523
8118	1201+38.56	103.43	2057683.967	955775.020
9582	1203+19.78	-141.14	2057669.837	955498.272
9583	1200+84.30	20.85	2057695.521	955605.745
9584	1201+27.13	-36.34	2057722.968	955621.900
9585	1201+64.95	-33.04	2057766.359	955662.323
9586	1202+79.76	-59.17	2057796.644	955626.874
9587	1202+44.79	-47.63	2057805.423	955637.635
9588	1202+29.89	-30.10	2057781.414	955664.793
9589	1201+93.58	-25.58	2057758.446	955667.989
9590	1203+74.97	-11.96	2057683.919	955601.601
9592	1200+90.00	-11.96	2057670.058	955533.199
9811	1200+90.00	0.00	2057668.095	955533.231
9812	1201+58.21	0.00	2057728.204	955680.125
9813	1202+26.68	-70.00	2057772.374	955625.821
9814	1202+26.68	0.00	2057783.003	955695.009
9815	1202+40.32	0.00	2057796.459	955692.753
9817	1202+80.32	-85.00	2057781.264	955603.122
9818	1203+31.78	0.00	2057847.992	955661.777
9819	1203+29.61	0.00	2057865.232	955639.928

PROJECT COORDINATES
Illinois State Plane, East Zone, NAD83 (2011)
PROPOSED CENTERLINE, RA5 JUDD STREET

PT#	STATION	OFFSET	NORTH	EAST
9749	600+00.00	0.00	2057744.542	955779.710
9750	600+76.99	0.00	2057790.705	955718.091
9759	600+87.66	0.00	2057801.213	955716.282
9761	601+58.50	0.00	2057861.524	955680.143
9762	601+93.37	0.00	2057882.503	955653.556

PROPOSED CENTERLINE, RA6 JUDD STREET

PT#	STATION	OFFSET	NORTH	EAST
9749	650+00.00	0.00	2057744.542	955779.710
9751	650+80.97	0.00	2057824.125	955764.765

PROPOSED CENTERLINE, RA7 JUDD STREET

PT#	STATION	OFFSET	NORTH	EAST
9767	1102+77.16	0.00	2057850.765	955771.042
9769	1102+34.94	0.00	2057850.766	955811.329

PROPOSED CENTERLINE, RA8 JUDD STREET

PT#	STATION	OFFSET	NORTH	EAST
9748	500+00.00	0.00	2057744.542	955779.710
9752	500+89.50	0.00	2057826.104	955816.558
9778	500+95.79	0.00	2057829.127	955822.016

PROPOSED CENTERLINE, RA9 JUDD STREET

PT#	STATION	OFFSET	NORTH	EAST
9749	750+00.00	0.00	2057744.542	955779.710
9753	750+89.50	0.00	2057786.799	955858.606

PROPOSED CENTERLINE, RA10 JUDD STREET

PT#	STATION	OFFSET	NORTH	EAST
9782	1002+61.07	0.00	2057767.479	955872.613
9784	1002+30.94	0.00	2057737.527	955870.281
9786	1001+91.29	0.00	2057696.432	955876.202

PROPOSED CENTERLINE, RA11 JUDD STREET

PT#	STATION	OFFSET	NORTH	EAST
9017	401+47.83	2.83	2057643.355	955880.769
9749	402+99.39	0.00	2057744.542	955779.710
9754	402+17.89	0.00	2057704.523	955850.709
9794	401+20.74	0.00	2057623.772	955809.076
9795	402+06.99	0.00	2057693.793	955852.655

PROPOSED CENTERLINE, RA12 JUDD STREET

PT#	STATION	OFFSET	NORTH	EAST
9749	452+94.93	0.00	2057744.542	955779.710
9755	452+13.68	0.00	2057665.856	955799.955

PROJECT COORDINATES
Illinois State Plane, East Zone, NAD83 (2011)
PROPOSED CENTERLINE, RA1 JUDD STREET

PT#	STATION	OFFSET	NORTH	EAST
8104	1304+15.83	4.30	2057564.819	955909.793
8114	1302+46.47	-18.33	2057671.585	955774.935
8117	1301+55.61	-6.87	2057670.970	955677.523
8118	1302+41.54	-39.62	2057683.967	955775.020
8338	1303+39.41	-1.03	2057612.057	955849.719
8339	1303+44.98	-4.53	2057612.098	955856.313
9567	1304+28.65	20.77	2057541.072	955909.826
9568	1304+21.34	11.50	2057555.791	955909.808
9570	1303+18.94	11.56	2057611.902	955825.295
9571	1302+86.71	28.77	2057611.679	955789.987
9572	1301+74.41	59.59	2057611.164	955708.424
9573	1301+72.52	62.55	2057608.164	955708.442
9574	1300+00.00	14.24	2057607.060	955513.678
9575	1300+00.00	11.24	2057610.059	955533.004
9798	1304+51.52	0.00	2057546.192	955980.430
9799	1302+23.42	0.00	2057664.302	955746.189
9800	1301+89.10	85.00	2057586.137	955712.794
9801	1301+42.41	0.00	2057658.632	955668.415
9802	1301+33.04	0.00	2057663.741	955660.425
9804	1300+13.73	0.00	2057621.632	955547.053
9805	1300+00.00	0.00	2057621.295	955533.328
9875	1300+53.76	21.60	2057604.171	955590.841
9876	1300+64.40	24.00	2057604.278	955602.841
9877	1300+65.07	20.87	2057607.497	955602.821
9878	1300+54.29	18.40	2057607.421	955590.821

PARCEL NUMBER	TOTAL HOLDINGS ACRES	PART TAKEN ACRES	AREA IN EXISTING R.O.W. ACRES	REMAINDER AREA ACRES	EASEMENT AREA ACRES	EASEMENT AREA SQUARE FEET	PARCEL INDEX NUMBER
1NUO092 1NUO092TE-A 1NUO092TE-B	3.004	0.026		2.978	A=0.033 B=0.013		13-05-455-009 13-05-455-003 13-05-455-002
1NUO093	0.125	0.125		0.000	N/A		13-05-402-043
1NUO094 1NUO094TE	0.815	0.107		0.708	0.054		13-05-402-039

SURVEY NOTES:
1. ALL DIMENSIONS ARE MEASURED UNLESS NOTED OTHERWISE.
2. BEARINGS, DISTANCES AND COORDINATES SHOWN HEREON REFERENCE THE ILLINOIS STATE PLANE COORDINATE SYSTEM, EAST ZONE, NAD83 (2011) ADJUSTMENT "GRID".
3. ALL MEASURED AND CALCULATED DISTANCES AREA "GRID" NOT "GROUND". TO OBTAIN GROUND DISTANCES, DIVIDE GRID DISTANCES SHOWN BY THE SCALE FACTOR OF 0.99993761.
4. AREAS SHOWN ON THIS PLAT ARE "GROUND".
5. FIELD SURVEY COMPLETED ON MARCH 26, 2020.

LEGEND

- SECTION / QUARTER SECTION LINE
- PLATTED LOT LINES
- PROPERTY (DEED) LINE
- APPARENT PROPERTY LINE
- EXISTING CENTERLINE
- PROPOSED CENTERLINE
- EXISTING RIGHT OF WAY LINE
- PROPOSED RIGHT OF WAY LINE
- EXISTING EASEMENT
- PROPOSED EASEMENT
- EXISTING ACCESS CONTROL LINE
- PROPOSED ACCESS CONTROL LINE
- 129.32' MEASURED DIMENSION
- (129.32') RECORDED DIMENSION
- EXISTING BUILDING

SECTION CORNER; QUARTER SECTION CORNER

GRAPHIC SCALE FEET; SCALE: 1"=30'

BEARINGS ARE REFERENCED TO THE ILLINOIS STATE PLANE COORDINATE SYSTEM, NAD83 (2011 ADJUSTMENT), EAST ZONE.

- IRON PIPE OR ROD FOUND
- + CUT CROSS FOUND OR SET
- ⊕ "MAG" NAIL SET
- ● 5 / 8" REBAR SET
- ■ STAKING OF PROPOSED RIGHT OF WAY. SET DIVISION OF HIGHWAYS SURVEY MARKER TO MONUMENT THE POSITION SHOWN. IDENTIFIED BY INSCRIPTION DATA AND SURVEYORS REGISTRATION NUMBER.
- ■ M STAKING OF PROPOSED RIGHT OF WAY IN CULTIVATED AREAS. BURIED 5/8 INCH METAL ROD 26 INCHES BELOW GROUND TO MARK FUTURE SURVEY MARKER POSITION IDENTIFIED BY COLORED PLASTIC CAP BEARING SURVEYORS REGISTRATION NUMBER.
- PERMANENT SURVEY MARKER, I.D.O.T. STANDARD 667101-02 (TO BE SET BY OTHERS)
- □ RIGHT OF WAY STAKING PROPOSED TO BE SET

PROP. CURVE RA5JUDD-C1
PI STA. = 600+82.32
Δ = 1° 09' 57" (LT)
D = 10° 56' 04"
R = 524.00'
T = 5.33'
L = 10.65'
E = 0.02'
e = -----
T.R. = -----
S.E. RUN = -----
P.C. STA = 600+76.99
P.T. STA = 600+87.66

PROP. CURVE RA5JUDD-C2
PI STA. = 601+25.21
Δ = 41° 09' 24" (LT)
D = 57° 7' 45"
R = 100.00'
T = 37.51'
L = 71.8'
E = 6.82
e = -----
T.R. = -----
S.E. RUN = -----
P.C. STA = 600+87.66
P.T. STA = 601+59.50

STATE OF ILLINOIS)
) SS
COUNTY OF WILL)

THIS IS TO CERTIFY THAT I, KENNETH J. PESAVENTO, AN ILLINOIS PROFESSIONAL LAND SURVEYOR, OF, RUETTIGER, TONELLI & ASSOCIATES, AN ILLINOIS PROFESSIONAL DESIGN FIRM LAND SURVEYING CORPORATION, NUMBER 184.001251,) HAVE SURVEYED THE PLAT OF HIGHWAYS SHOWN HEREON IN SECTION 5, TOWNSHIP 44 NORTH, RANGE 7 EAST OF THE THIRD PRINCIPAL MERIDIAN, McHENRY COUNTY, THAT THE SURVEY IS TRUE AND COMPLETE AS SHOWN TO THE BEST OF MY KNOWLEDGE AND BELIEF, THAT THE PLAT CORRECTLY REPRESENTS SAID SURVEY, THAT ALL MONUMENTS FOUND AND ESTABLISHED ARE OF PERMANENT QUALITY AND OCCUPY THE POSITIONS SHOWN THEREON AND THAT THE MONUMENTS ARE SUFFICIENT TO ENABLE THE SURVEY TO BE RETRACED, MADE FOR THE DEPARTMENT OF TRANSPORTATION, STATE OF ILLINOIS.

DATED AT SHOREWOOD, ILLINOIS THIS 28TH DAY OF JANUARY 2025 A.D.

ILLINOIS PROFESSIONAL LAND SURVEYOR NO. 3425
LICENSE EXPIRATION DATE: 11-30-2026

THIS PROFESSIONAL SERVICE CONFORMS TO THE CURRENT ILLINOIS MINIMUM STANDARDS FOR A BOUNDARY SURVEY.

KENNETH J. PESAVENTO 3425 PROFESSIONAL LAND SURVEYOR STATE OF ILLINOIS SHOREWOOD, ILLINOIS

Ruettiger, Tonelli & Associates, Inc.
Surveyors • Engineers • Planners • Landscape Architects • G.I.S. Consultants
120 CAPISTA DRIVE - SHOREWOOD, ILLINOIS 60404
PH: (815) 744-4600 FAX: (815) 741-8331
website: www.rtatlantic.com

R.T. & A. Dwg. No.: 2020-0163.00

IDOT USE ONLY

PLAT OF HIGHWAYS
STATE OF ILLINOIS
DEPARTMENT OF TRANSPORTATION
ILLINOIS ROUTE 47

LIMITS: IL 120 TO US 14 — COUNTY: McHENRY
SECTION: — JOB NO.: R-91-019-17
STA. 181+26.06 TO STA. 184+55.33
SCALE: 1"=30' — SHEET 45 OF 57 SHEETS

BUREAU OF LAND ACQUISITION
201 WEST CENTER COURT
SCHAUMBURG, ILLINOIS 60196

REVISION DATE: / / REVISION MADE BY:

FOR REFERENCE ONLY - N.T.S.

PART OF SE 1/4 OF SECTION 5 TWP.44N., R.7E. OF THE 3RD. P.M., IN McHENRY COUNTY, ILLINOIS.

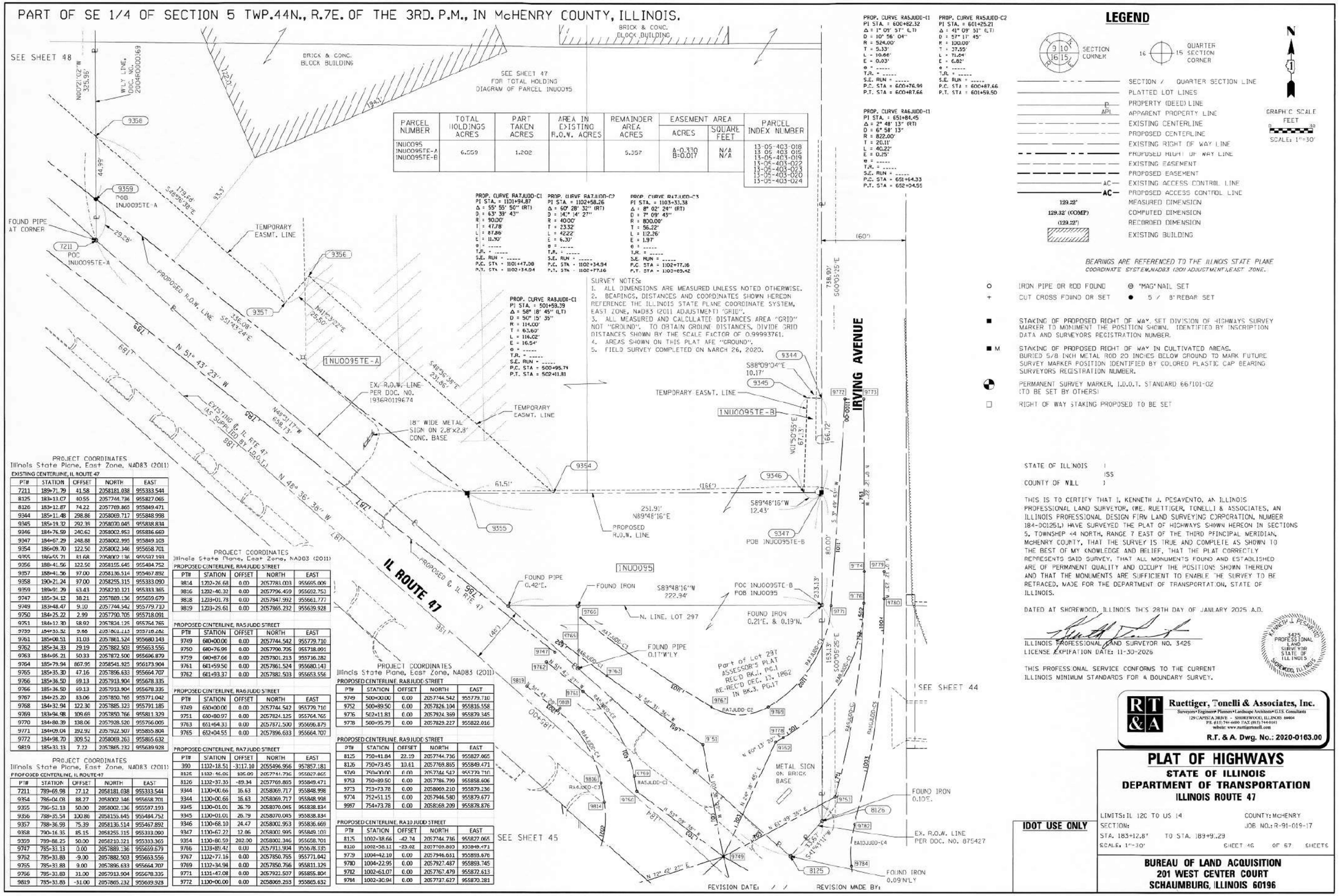
SEE SHEET 48
BRICK & CONC. BLOCK BUILDING
SEE SHEET 47 FOR TOTAL HOLDING DIAGRAM OF PARCEL 1NU0095
N00°21'02"W 325.95'
W'LY LINE, DOC. NO. 2004R0000169
9358
44.99'
9359
POB 1NU0095TE-A
178.64'
S48°36'38"E
95.3'
FOUND PIPE AT CORNER
7211
POC 1NU0095TE-A
29.28'
TEMPORARY EASMT. LINE
9356
PROPOSED R.O.W. LINE
336.08'
S51°43'22"E
N41°43'22"E 25.50'
9357
681'
N 51° 43' 23" W
1NU0095TE-A
EX. R.O.W. LINE PER DOC. NO. 1936R0119674
S48°36'38"E 231.86'
TEMPORARY EASMT. LINE
18" WIDE METAL SIGN ON 2.8'x2.8' CONC. BASE
EXISTING R.O.W. (AS SUPPLIED BY I.D.O.T.)
N48°31'17"W 638.73'
681'
N 48° 36' 38" W
687'
IL ROUTE 47
PROPOSED R.O.W. LINE
9361
381'
(66')
9354
61.51'
(166')
9346
251.91'
N89°48'16"E
PROPOSED R.O.W. LINE
9355
S89°48'16"W 12.43'
S347
POB 1NU0095TE-B
1NU0095
FOUND PIPE 0.42'E.
FOUND IRON
S89°48'16"W 222.94'
POC 1NU0095TE-B
POB 1NU0095
9765
N. LINE, LOT 297
FOUND IRON 0.21'E. & 0.19'N.
9771
233.13'
FOUND PIPE 0.17'W'LY
Part of Lot 297 ASSESSOR'S PLAT RECD BK. 1, PG. 1 RE-RECD DEC. 13, 1962 IN BK. 3, PG. 17
9767
9769
9762
9763
9761
9747
9819
9768
9751
9752
9753
9754
9755
9756
9757
9758
9759
9760
9772
9773
9774
9776
9778
9779
9780
9782
9784
9344
9345
9346
9347
9348
9349
9350
9351
9352
9353
9354
9355
9356
9357
9358
9359
9360
9361
9362
9363
9364
9365
9366
9367
9368
9369
9370
9371
9372
9373
9374
9375
9376
9377
9378
9379
9380
9381
9382
9383

PART OF SE 1/4 OF SECTION 5 TWP.44N., R.7E. OF THE 3RD. P.M., IN McHENRY COUNTY, ILLINOIS.

SURVEY NOTES:
1. ALL DIMENSIONS ARE MEASURED UNLESS NOTED OTHERWISE.
2. BEARINGS, DISTANCES AND COORDINATES SHOWN HEREON REFERENCE THE ILLINOIS STATE PLANE COORDINATE SYSTEM, EAST ZONE, NAD83 (2011 ADJUSTMENT) 'GRID'.
3. ALL MEASURED AND CALCULATED DISTANCES AREA "GRID" NOT "GROUND". TO OBTAIN GROUND DISTANCES, DIVIDE GRID DISTANCES SHOWN BY THE SCALE FACTOR OF 0.99993761.
4. AREAS SHOWN ON THIS PLAT ARE "GROUND".
5. FIELD SURVEY COMPLETED ON MARCH 26, 2020.

PARCEL NUMBER	TOTAL HOLDINGS ACRES	PART TAKEN ACRES	AREA IN EXISTING R.O.W. ACRES	REMAINDER AREA ACRES	EASEMENT AREA ACRES	EASEMENT AREA SQUARE FEET	PARCEL INDEX NUMBER
INU0095 INU0095TE-A INU0095TE-B	6.559	1.202		5.357	A=0.330 B=0.017	N/A N/A	13-05-401-018 13-05-403-015 13-05-403-019 13-05-403-022 13-05-403-023 13-05-403-020 13-05-403-024
INU0097 INU0097TE	2.574	0.024		2.550	0.051	N/A	13-05-402-020 13-05-402-032 13-05-402-038
INU0098 INU0098TE	4.861	0.010		4.851	0.007	283	13-05-105-001 through 104

TOTAL HOLDING DIAGRAM OF PARCELS INU0095, INU0097 & INU0098
SCALE: 1"=60'

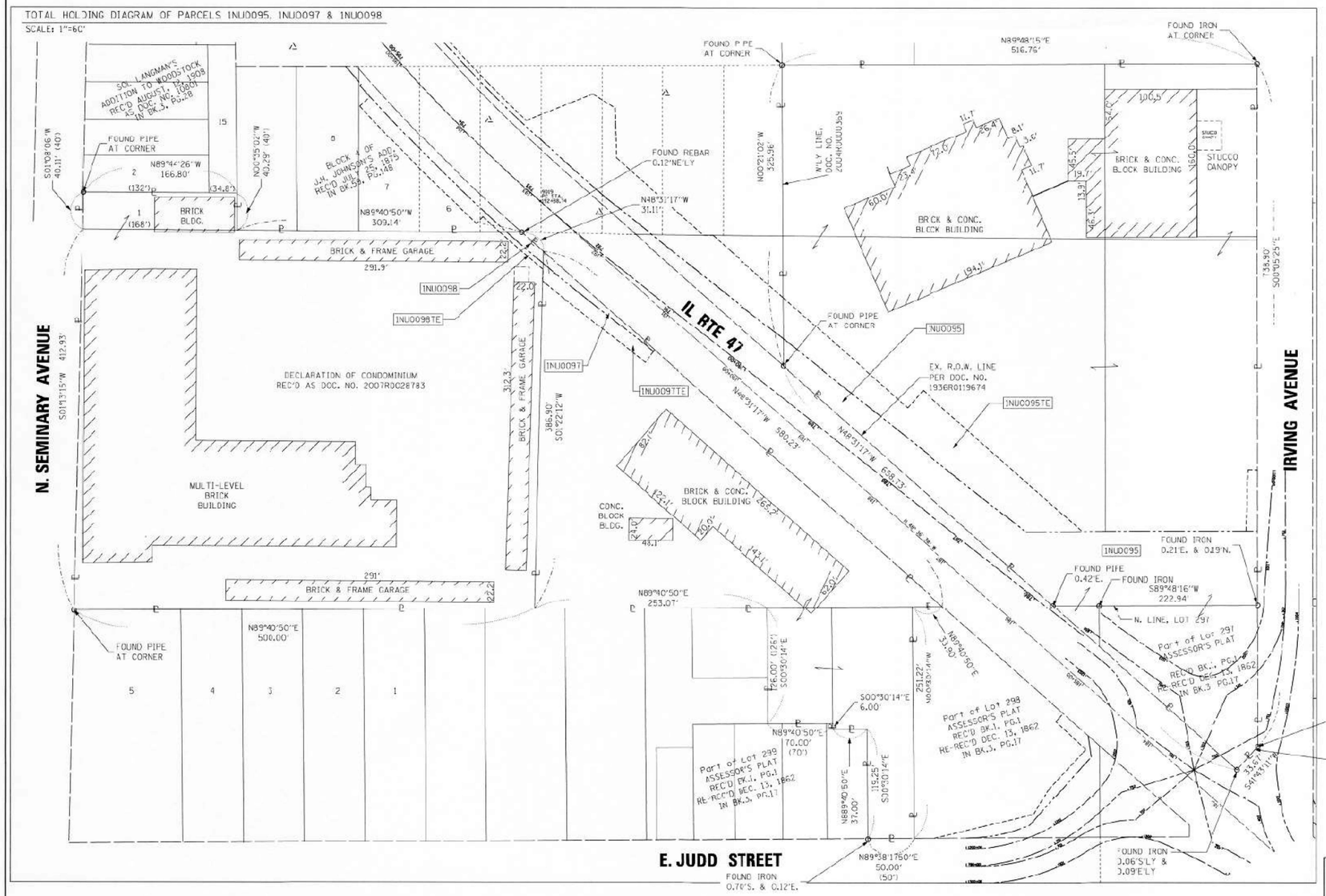

LEGEND

SECTION CORNER
QUARTER SECTION CORNER

GRAPHIC SCALE FEET
SCALE: 1"=30'

- SECTION / QUARTER SECTION LINE
- PLATTED LOT LINES
- P PROPERTY (DEED) LINE
- APL APPARENT PROPERTY LINE
- EXISTING CENTERLINE
- PROPOSED CENTERLINE
- EXISTING RIGHT OF WAY LINE
- PROPOSED RIGHT OF WAY LINE
- EXISTING EASEMENT
- PROPOSED EASEMENT
- AC EXISTING ACCESS CONTROL LINE
- AC PROPOSED ACCESS CONTROL LINE
- 129.32' MEASURED DIMENSION
- 129.32' (COMP) COMPUTED DIMENSION
- (129.2') RECORDED DIMENSION
- EXISTING BUILDING

BEARINGS ARE REFERENCED TO THE ILLINOIS STATE PLANE COORDINATE SYSTEM, NAD83 '2011 ADJUSTMENT', EAST ZONE.

- IRON PIPE OR ROD FOUND
- + CUT CROSS FOUND OR SET
- ⊕ "MAG" NAIL SET
- ● 5 / 8 REBAR SET
- ■ STAKING OF PROPOSED RIGHT OF WAY. SET DIVISION OF HIGHWAYS SURVEY MARKER TO MONUMENT THE POSITION SHOWN. IDENTIFIED BY INSCRIPTION DATA AND SURVEYORS REGISTRATION NUMBER.
- ■ M STAKING OF PROPOSED RIGHT OF WAY IN CULTIVATED AREAS. BUFIED 5/8 INCH METAL ROD 20 INCHES BELOW GROUND TO MARK FUTURE SURVEY MARKER POSITION IDENTIFIED BY COLORED PLASTIC CAP BEARING SURVEYORS REGISTRATION NUMBER.
- PERMANENT SURVEY MARKER, I.D.O.T. STANDARD 667101-02 (TO BE SET BY OTHERS)
- □ RIGHT OF WAY STAKING PROPOSED TO BE SET

STATE OF ILLINOIS)
) SS
COUNTY OF WILL)

THIS IS TO CERTIFY THAT I, KENNETH J. PESAVENTO, AN ILLINOIS PROFESSIONAL LAND SURVEYOR, (WE. RUETTIGER, TONELLI & ASSOCIATES, AN ILLINOIS PROFESSIONAL DESIGN FIRM LAND SURVEYING CORPORATION, NUMBER 184-001251) HAVE SURVEYED THE PLAT OF HIGHWAYS SHOWN HEREON IN SECTION 5, TOWNSHIP 44 NORTH, RANGE 7 EAST OF THE THIRD PRINCIPAL MERIDIAN, McHENRY COUNTY, THAT THE SURVEY IS TRUE AND COMPLETE AS SHOWN TO THE BEST OF MY KNOWLEDGE AND BELIEF, THAT THE PLAT CORRECTLY REPRESENTS SAID SURVEY, THAT ALL MONUMENTS FOUND AND ESTABLISHED ARE OF PERMANENT QUALITY AND OCCUPY THE POSITIONS SHOWN THEREON AND THAT THE MONUMENTS ARE SUFFICIENT TO ENABLE THE SURVEY TO BE RETRACED, MADE FOR THE DEPARTMENT OF TRANSPORTATION, STATE OF ILLINOIS.

DATED AT SHOREWOOD, ILLINOIS THIS 28TH DAY OF JANUARY 2025 A.D.

ILLINOIS PROFESSIONAL LAND SURVEYOR NO. 3425
LICENSE EXPIRATION DATE: 11-30-2026

KENNETH J. PESAVENTO 3425 PROFESSIONAL AND SURVEYOR STATE OF ILLINOIS SHOREWOOD, ILLINOIS

THIS PROFESSIONAL SERVICE CONFORMS TO THE CURRENT ILLINOIS MINIMUM STANDARDS FOR A BOUNDARY SURVEY.

Ruettiger, Tonelli & Associates, Inc.
Surveyors • Engineers • Planners • Landscape Architects • G.I.S. Consultants
129 CAMPUS DRIVE - SHOREWOOD, ILLINOIS 60404
PH. 815.744.6600 FAX (815) 744-6181
website: www.ruettigertonelli.com

R.T. & A. Dwg. No.: 2020-0163.00

PLAT OF HIGHWAYS
STATE OF ILLINOIS
DEPARTMENT OF TRANSPORTATION
ILLINOIS ROUTE 47

LIMITS: IL 120 TO US 14 — COUNTY: McHENRY
SECTION: — JOB NO.: R-91-019-17
STA. 182+00 TO STA. 195+00
SCALE: N/A — SHEET 17 OF 67 SHEETS

IDOT USE ONLY

BUREAU OF LAND ACQUISITION
201 WEST CENTER COURT
SCHAUMBURG, ILLINOIS 60196

REVISION DATE: / / REVISION MADE BY:

FOR REFERENCE ONLY - N.T.S.

MODEL: Default
FILE NAME: pw:\\aecom-na-pw.bentley.com:AECOM_DS21_NA_2020\Documents\60632011-IL-47W00-CAD\W10_CAD\03_SHEETS\General\D160X17-sht-PLAT.dgn

AECOM
303 EAST WACKER DRIVE, SUITE 1400
CHICAGO, IL 60601-5276
PHONE: (312) 373-7700 FAX: (312) 373-6800

USER NAME = muniza	DESIGNED -	REVISED -	
	DRAWN -	REVISED -	
PLOT SCALE = 100.0000 ' / in.	CHECKED -	REVISED -	
PLOT DATE = 2/7/2025	DATE -	REVISED -	

STATE OF ILLINOIS
DEPARTMENT OF TRANSPORTATION

SCALE: SHEET OF SHEETS STA. TO STA.

F.A.P. RTE.	SECTION	COUNTY	TOTAL SHEETS	SHEET NO.
326	2024-1052-N,C,SW,FL	MCHENRY	941	618
		CONTRACT NO. 62X94		
	ILLINOIS FED. AID PROJECT			

PART OF SE 1/4 OF SECTION 5 TWP.44N., R.7E. OF THE 3RD. P.M., IN McHENRY COUNTY, ILLINOIS.

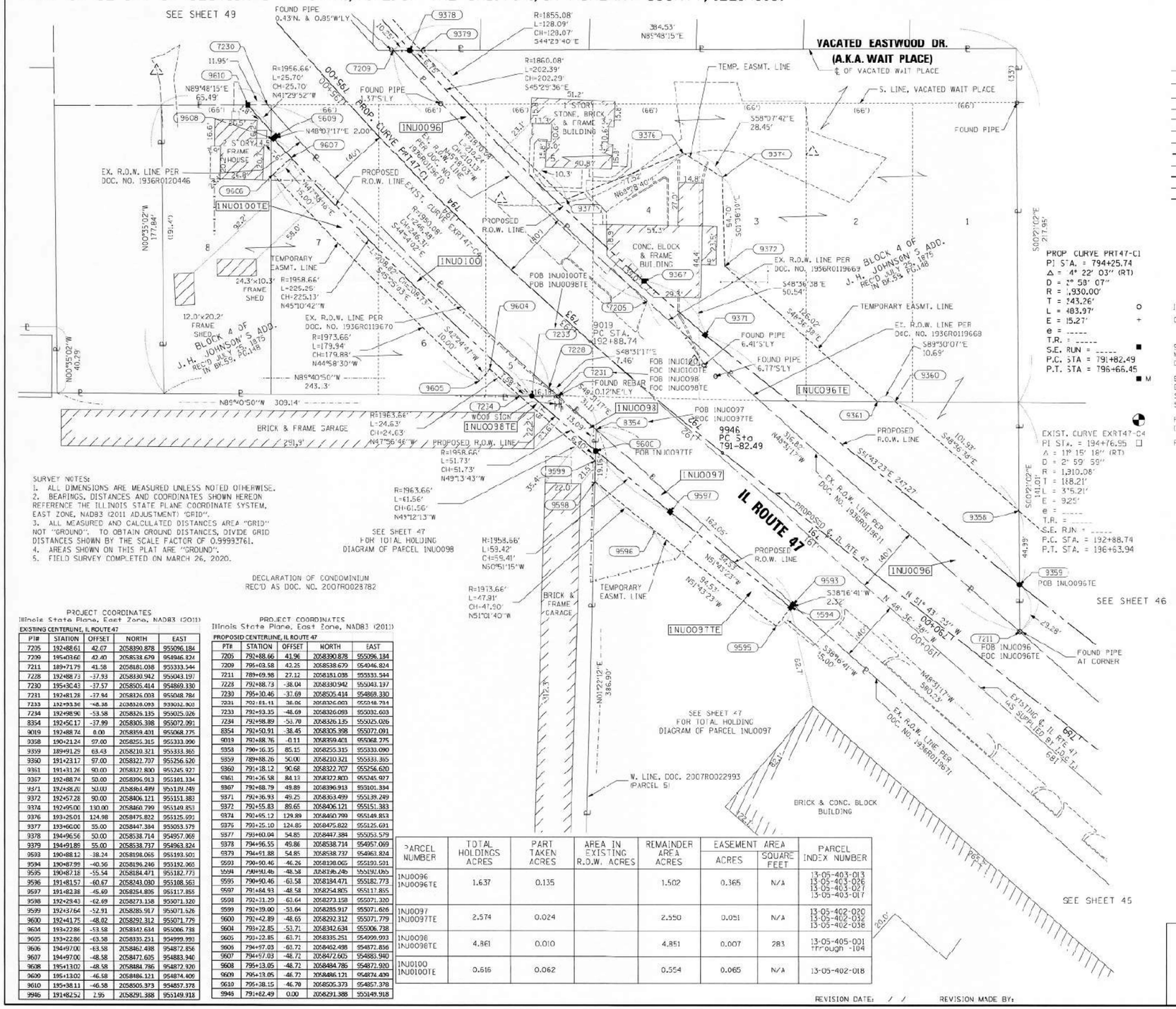

SURVEY NOTES:
1. ALL DIMENSIONS ARE MEASURED UNLESS NOTED OTHERWISE.
2. BEARINGS, DISTANCES AND COORDINATES SHOWN HEREON REFERENCE THE ILLINOIS STATE PLANE COORDINATE SYSTEM, EAST ZONE, NAD83 (2011 ADJUSTMENT) 'GRID'.
3. ALL MEASURED AND CALCULATED DISTANCES AREA "GRID" NOT "GROUND". TO OBTAIN GROUND DISTANCES, DIVIDE GRID DISTANCES SHOWN BY THE SCALE FACTOR OF 0.99993761.
4. AREAS SHOWN ON THIS PLAT ARE "GROUND".
5. FIELD SURVEY COMPLETED ON MARCH 26, 2020.

PROJECT COORDINATES
Illinois State Plane, East Zone, NAD83 (2011)
EXISTING CENTERLINE, IL ROUTE 47

PT#	STATION	OFFSET	NORTH	EAST
7205	192+88.61	42.07	2058390.878	955096.184
7209	195+03.60	42.40	2058538.679	954946.824
7211	189+71.79	41.58	2058181.038	955333.544
7228	192+88.73	-37.93	2058330.942	955043.197
7230	195+30.43	-37.57	2058505.414	954869.330
7231	192+81.28	-37.94	2058326.003	955048.784
7233	192+93.36	-48.38	2058329.093	955032.803
7234	192+98.90	-53.58	2058326.135	955025.026
8354	192+50.17	-37.99	2058305.398	955072.091
9019	192+88.74	0.00	2058359.401	955068.375
9358	190+21.24	97.00	2058255.315	955333.090
9359	189+91.29	63.43	2058210.321	955333.365
9360	191+23.17	97.00	2058321.707	955256.520
9361	191+31.26	90.00	2058322.800	955245.927
9367	192+88.74	50.00	2058396.913	955101.334
9371	192+58.20	50.00	2058363.499	955139.249
9372	192+57.28	90.00	2058406.121	955151.383
9374	192+95.00	130.00	2058460.799	955149.853
9376	193+25.01	124.98	2058475.822	955125.691
9377	193+60.00	55.00	2058447.384	955053.579
9378	194+96.56	50.00	2058538.714	954957.069
9379	194+91.88	55.00	2058538.737	954963.824
9593	190+88.12	-38.24	2058198.065	955193.501
9594	190+87.99	-40.56	2058196.246	955192.965
9595	190+87.18	-55.54	2058184.471	955182.773
9596	191+81.57	-60.67	2058243.030	955108.563
9597	191+82.38	-45.69	2058254.805	955117.855
9598	192+29.43	-62.69	2058273.158	955071.320
9599	192+37.64	-52.91	2058285.917	955071.626
9600	192+41.75	-48.02	2058292.312	955071.779
9604	193+22.86	-53.58	2058342.634	955006.738
9605	193+22.86	-63.58	2058335.251	954999.993
9606	194+97.00	-63.58	2058462.498	954872.856
9607	194+97.00	-48.58	2058472.605	954883.940
9608	195+13.00	-48.58	2058484.786	954872.920
9609	195+13.02	-46.58	2058486.121	954874.409
9610	195+38.11	-46.58	2058505.373	954857.378
9946	191+82.52	2.95	2058291.388	955149.918

PROJECT COORDINATES
Illinois State Plane, East Zone, NAD83 (2011)
PROPOSED CENTERLINE, IL ROUTE 47

PT#	STATION	OFFSET	NORTH	EAST
7205	792+88.66	41.96	2058390.878	955096.184
7209	795+03.58	42.25	2058538.679	954946.824
7211	789+69.98	27.12	2058181.038	955333.544
7228	792+88.73	-38.04	2058330.942	955043.197
7230	795+30.46	-37.69	2058505.414	954869.330
7231	792+81.11	-38.06	2058326.003	955048.784
7233	792+93.35	-48.69	2058326.093	955032.603
7234	792+98.89	-53.70	2058326.135	955025.026
8354	792+50.91	-38.45	2058305.398	955072.091
9019	792+88.76	-0.11	2058359.401	955068.375
9358	790+16.35	85.15	2058255.315	955333.090
9359	789+88.26	50.00	2058210.321	955333.365
9360	791+18.12	90.68	2058322.707	955256.620
9361	791+26.58	84.13	2058322.800	955245.927
9367	792+88.79	48.88	2058396.913	955101.334
9371	792+36.93	49.25	2058363.499	955139.249
9372	792+55.83	89.65	2058406.121	955151.383
9374	792+95.12	129.89	2058460.799	955149.853
9376	793+25.10	124.85	2058475.822	955125.691
9377	793+60.04	54.85	2058447.384	955053.579
9378	794+96.55	49.86	2058538.714	954957.069
9379	794+91.88	54.85	2058538.737	954963.824
9593	790+90.46	-46.26	2058198.065	955193.501
9594	790+90.46	-48.58	2058196.246	955192.965
9595	790+90.46	-63.58	2058184.471	955182.773
9597	791+84.93	-48.58	2058254.805	955117.855
9598	792+31.29	-63.64	2058273.158	955071.320
9599	792+39.00	-53.64	2058285.917	955071.626
9600	792+42.89	-48.65	2058292.312	955071.779
9604	793+22.85	-53.71	2058342.634	955006.738
9605	793+22.85	-63.71	2058335.251	954999.993
9606	794+97.03	-63.72	2058462.498	954872.856
9607	794+97.03	-48.72	2058472.605	954883.940
9608	795+13.05	-48.72	2058484.786	954872.920
9609	795+13.05	-46.72	2058486.121	954874.409
9610	795+38.15	-46.70	2058505.373	954857.378
9946	791+82.49	0.00	2058291.388	955149.918

PARCEL NUMBER	TOTAL HOLDINGS ACRES	PART TAKEN ACRES	AREA IN EXISTING R.O.W. ACRES	REMAINDER AREA ACRES	EASEMENT AREA ACRES	EASEMENT AREA SQUARE FEET	PARCEL INDEX NUMBER
INU0096 INU0096TE	1.637	0.135		1.502	0.365	N/A	13-05-403-013 13-05-403-026 13-05-403-027 13-05-403-017
INU0097 INU0097TE	2.574	0.024		2.550	0.051	N/A	13-05-402-020 13-05-402-032 13-05-402-036
INU0098 INU0098TE	4.861	0.010		4.851	0.007	283	13-05-405-001 through -104
INU0100 INU0100TE	0.616	0.062		0.554	0.065	N/A	13-05-402-018

LEGEND

SECTION CORNER
QUARTER SECTION CORNER
SECTION / QUARTER SECTION LINE
PLATTED LOT LINES
P PROPERTY (DEED) LINE
APL APPARENT PROPERTY LINE
EXISTING CENTERLINE
PROPOSED CENTERLINE
EXISTING RIGHT OF WAY LINE
PROPOSED RIGHT OF WAY LINE
EXISTING EASEMENT
PROPOSED EASEMENT
AC EXISTING ACCESS CONTROL LINE
AC PROPOSED ACCESS CONTROL LINE
129.22' MEASURED DIMENSION
129.32' (COMP) COMPUTED DIMENSION
(129.22') RECORDED DIMENSION
EXISTING BUILDING

GRAPHIC SCALE FEET
SCALE: 1"=30'

BEARINGS ARE REFERENCED TO THE ILLINOIS STATE PLANE COORDINATE SYSTEM, NAD83 (2011 ADJUSTMENT), EAST ZONE.

IRON PIPE OR ROD FOUND
CUT CROSS FOUND OR SET
"MAG" NAIL SET
5/8" REBAR SET

STAKING OF PROPOSED RIGHT OF WAY. SET DIVISION OF HIGHWAYS SURVEY MARKER TO MONUMENT THE POSITION SHOWN. IDENTIFIED BY INSCRIPTION DATA AND SURVEYORS REGISTRATION NUMBER.

STAKING OF PROPOSED RIGHT OF WAY IN CULTIVATED AREAS. BURIED 5/8 INCH METAL ROD 20 INCHES BELOW GROUND TO MARK FUTURE SURVEY MARKER POSITION IDENTIFIED BY COLORED PLASTIC CAP BEARING SURVEYORS REGISTRATION NUMBER.

PERMANENT SURVEY MARKER, I.D.O.T. STANDARD 667101-02 (TO BE SET BY OTHERS)

RIGHT OF WAY STAKING PROPOSED TO BE SET

STATE OF ILLINOIS)
) SS
COUNTY OF WILL)

THIS IS TO CERTIFY THAT I, KENNETH J. PESAVENTO, AN ILLINOIS PROFESSIONAL LAND SURVEYOR, (WE RUETTIGER, TONELLI & ASSOCIATES, AN ILLINOIS PROFESSIONAL DESIGN FIRM LAND SURVEYING CORPORATION, NUMBER 184-001251,) HAVE SURVEYED THE PLAT OF HIGHWAYS SHOWN HEREON IN SECTION 5, TOWNSHIP 44 NORTH, RANGE 7 EAST OF THE THIRD PRINCIPAL MERIDIAN, MCHENRY COUNTY, THAT THE SURVEY IS TRUE AND COMPLETE AS SHOWN TO THE BEST OF MY KNOWLEDGE AND BELIEF, THAT THE PLAT CORRECTLY REPRESENTS SAID SURVEY, THAT ALL MONUMENTS FOUND AND ESTABLISHED ARE OF PERMANENT QUALITY AND OCCUPY THE POSITIONS SHOWN THEREON AND THAT THE MONUMENTS ARE SUFFICIENT TO ENABLE THE SURVEY TO BE RETRACED, MADE FOR THE DEPARTMENT OF TRANSPORTATION, STATE OF ILLINOIS.

DATED AT SHOREWOOD, ILLINOIS THIS 28TH DAY OF JANUARY 2025 A.D.

ILLINOIS PROFESSIONAL LAND SURVEYOR NO. 3425
LICENSE EXPIRATION DATE: 11-30-2026

THIS PROFESSIONAL SERVICE CONFORMS TO THE CURRENT ILLINOIS MINIMUM STANDARDS FOR A BOUNDARY SURVEY.

KENNETH J. PESAVENTO 3425 PROFESSIONAL LAND SURVEYOR STATE OF ILLINOIS SHOREWOOD, ILLINOIS

Ruettiger, Tonelli & Associates, Inc.
Surveyors • Engineers • Planners • Landscape Architects • GIS Consultants
129 CAPISTA DRIVE - SHOREWOOD, ILLINOIS 60404
PH. (815) 744-6600 FAX (815) 744-0101
website: www.ruettigertonelli.com

R.T. & A. Dwg. No.: 2020-0163.00

PLAT OF HIGHWAYS

STATE OF ILLINOIS
DEPARTMENT OF TRANSPORTATION
ILLINOIS ROUTE 47

LIMITS: IL 120 TO US 14 — COUNTY: McHENRY
SECTION: — JOB NO.: R-91-019-17
STA. 789+69.98 TO STA. 795+38.15
SCALE: 1"=30' — SHEET 48 OF 67 SHEETS

BUREAU OF LAND ACQUISITION
201 WEST CENTER COURT
SCHAUMBURG, ILLINOIS 60196

IDOT USE ONLY

REVISION DATE: / / REVISION MADE BY:

FOR REFERENCE ONLY - N.T.S.

MODEL: Default
FILE NAME: pw:\\aecom-na-pw.bentley.com:AECOM_DS21_NA_20200Documents\60632011-IL-47\900-CAD\910_CAD\03_SHEETS\General\D160X17-sht-PLAT.dgn

AECOM
303 EAST WACKER DRIVE, SUITE 1400
CHICAGO, IL 60601-5276
PHONE: (312) 373-7700 FAX: (312) 373-6800

USER NAME = muniza	DESIGNED -	REVISED -	
	DRAWN -	REVISED -	
PLOT SCALE = 100.0000 ' / in.	CHECKED -	REVISED -	
PLOT DATE = 2/7/2025	DATE -	REVISED -	

STATE OF ILLINOIS
DEPARTMENT OF TRANSPORTATION

SCALE: SHEET OF SHEETS STA. TO STA.

F.A.P. RTE.	SECTION	COUNTY	TOTAL SHEETS	SHEET NO.
326	2024-1052-N,C,SW,FL	MCHENRY	941	619
		CONTRACT NO. 62X94		
		ILLINOIS FED. AID PROJECT		

PART OF THE SE1/4 OF SECTION 5 TWP.44N., R.7E. OF THE 3RD. P.M., IN McHENRY COUNTY, ILLINOIS.

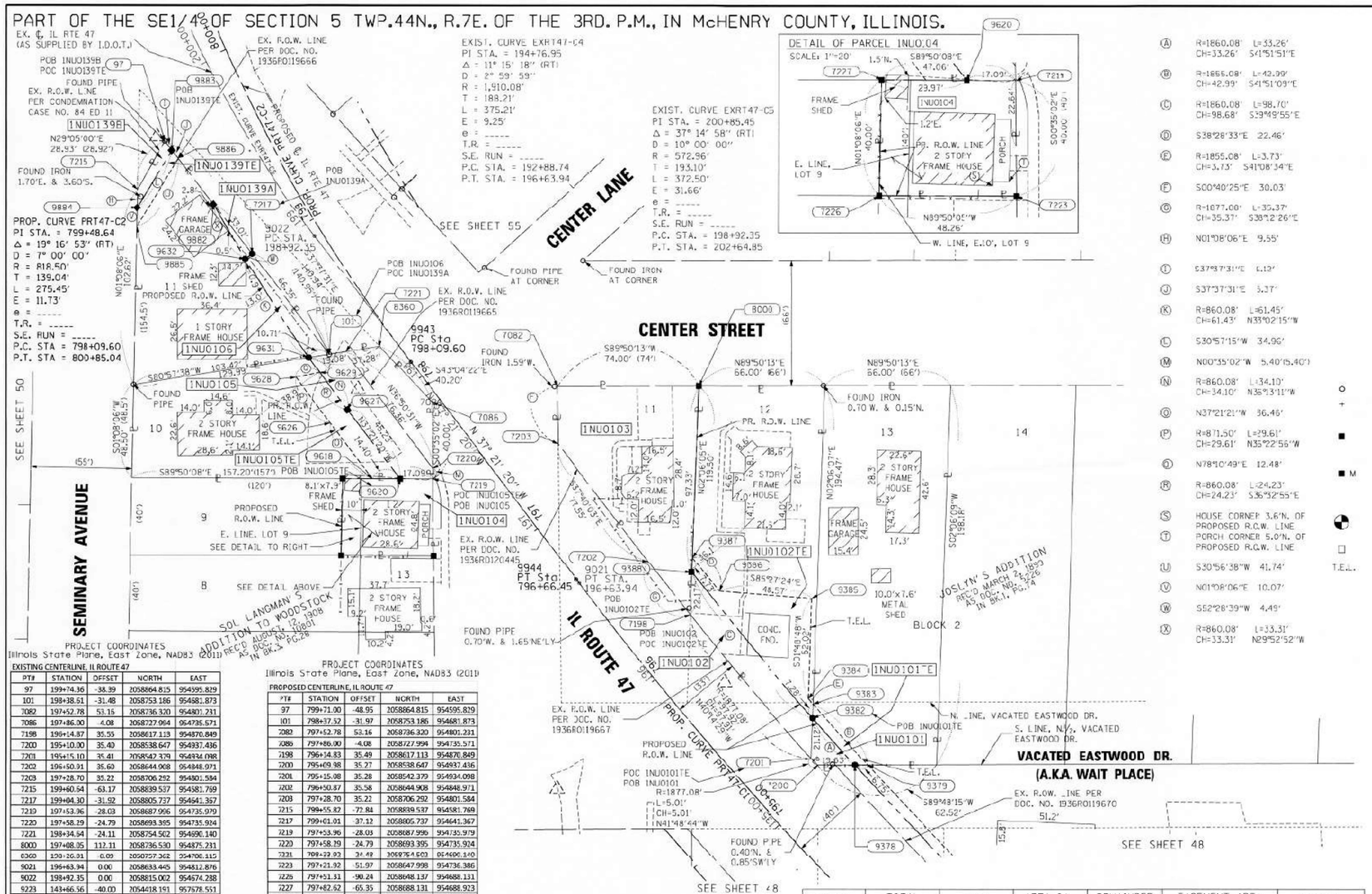

EXISTING CENTERLINE, IL ROUTE 47				
PT#	STATION	OFFSET	NORTH	EAST
97	199+74.36	-38.39	2058864.815	954595.829
101	198+38.51	-31.48	2058753.186	954681.873
7082	197+52.78	53.16	2058736.320	954801.231
7086	197+86.00	4.08	2058727.994	954735.571
7198	196+14.87	35.55	2058617.113	954870.849
7200	195+10.00	35.40	2058538.647	954937.436
7201	195+15.10	35.41	2058542.379	954934.098
7202	196+50.91	35.60	2058644.908	954848.971
7203	197+28.70	35.22	2058706.292	954801.584
7215	199+60.54	-63.17	2058839.537	954581.769
7217	199+04.30	-31.92	2058805.737	954641.357
7219	197+53.96	-28.03	2058687.996	954735.979
7220	197+58.19	-24.79	2058693.395	954735.924
7221	198+34.64	-24.11	2058754.502	954696.140
8000	197+08.05	112.11	2058736.530	954875.231
8360	199+26.01	0.09	2058757.362	954706.115
9021	196+63.94	0.00	2058633.445	954812.876
9022	198+92.35	0.00	2058815.002	954674.288
9223	143+66.56	-40.00	2054418.191	957578.551
9236	142+32.90	-40.00	2054290.342	957655.910
9237	153+13.57	-65.00	2055479.530	957390.076
9378	194+96.56	50.00	2058538.714	954957.069
9379	194+91.89	55.00	2058538.737	954963.824
9382	195+30.72	50.00	2058563.484	954934.872
9383	195+36.16	55.00	2058570.760	954935.139
9384	195+40.00	55.00	2058573.570	954932.684
9385	195+80.00	90.00	2058625.560	954934.330
9386	196+15.00	55.00	2058629.407	954885.917
9387	196+38.12	55.00	2058646.987	954871.945
9388	196+32.07	50.00	2058639.266	954871.662
9618	197+73.14	-53.00	2058688.086	954704.491
9619	197+35.83	-41.58	2058665.354	954736.209
9620	197+64.37	-41.58	2058688.045	954718.889
9625	198+09.50	-53.00	2058717.066	954682.369
9627	198+09.50	-41.58	2058723.996	954691.446
9628	198+39.20	-52.50	2058740.902	954664.807
9629	198+33.82	-41.24	2058743.458	954677.020
9631	198+43.59	-40.90	2058751.504	954671.299
9632	199+01.20	-36.41	2058803.003	954637.807
9694	202+08.38	-45.00	2059100.705	954514.879
9882	199+35.48	-33.66	2058831.884	954621.212
9883	199+68.58	-37.52	2058859.971	954596.562
9884	199+53.38	-68.23	2058829.989	954581.580
9885	199+45.84	-73.68	2058819.923	954581.380
9886	199+63.68	-36.81	2058855.719	954602.841
9943	198+09.60	0.00	2058749.225	954724.498
9944	196+66.45	0.00	2058635.440	954811.353

PROPOSED CENTERLINE, IL ROUTE 47				
PT#	STATION	OFFSET	NORTH	EAST
97	799+71.00	-48.95	2058864.815	954595.829
101	798+37.52	-31.97	2058753.186	954681.873
7082	797+52.78	53.16	2058736.320	954801.231
7086	797+86.00	-4.08	2058727.994	954735.571
7198	796+14.83	35.49	2058617.113	954870.849
7200	795+09.98	35.27	2058538.647	954937.436
7201	795+15.08	35.28	2058542.379	954934.098
7202	796+50.87	35.58	2058644.908	954848.971
7203	797+28.70	35.22	2058706.292	954801.584
7215	799+55.82	-72.84	2058839.537	954581.769
7217	799+01.01	-37.12	2058805.737	954641.357
7219	797+53.96	-28.03	2058687.996	954735.979
7220	797+58.19	-24.79	2058693.395	954735.924
7221	798+29.92	-24.49	2058754.502	954696.140
8223	797+21.92	-51.97	2058647.998	954736.386
8226	797+51.31	-90.24	2058648.137	954688.131
7227	797+42.62	-65.35	2058688.131	954688.923
8000	797+08.05	112.11	2058736.530	954875.231
8360	798+25.84	-8.25	2058757.362	954706.115
9021	796+63.94	0.00	2058633.445	954812.876
9022	798+92.07	-4.17	2058815.002	954674.288
9378	794+96.55	49.86	2058538.714	954957.069
9379	794+91.88	54.85	2058538.737	954963.824
9382	795+30.69	49.87	2058563.484	954934.872
9383	795+36.13	54.88	2058570.760	954935.139
9384	795+39.97	54.88	2058573.570	954932.684
9385	795+79.92	89.91	2058625.560	954934.330
9386	796+14.94	54.94	2058629.407	954885.917
9387	796+38.06	54.97	2058646.987	954871.945
9388	796+32.01	49.96	2058639.266	954871.662
9618	797+73.14	-53.00	2058688.086	954704.491
9619	797+35.82	-41.58	2058665.354	954736.209
9620	797+64.37	-41.58	2058688.045	954718.889
9625	798+09.50	-53.00	2058717.066	954682.369
9627	798+09.50	-41.58	2058723.996	954691.446
9628	798+37.40	-53.00	2058740.902	954664.807
9629	798+32.65	-41.58	2058743.458	954677.020
9632	799+00.52	-41.58	2058803.003	954637.807
9882	799+32.12	-41.58	2058831.884	954621.212
9883	799+65.34	-47.75	2058859.971	954596.562
9884	799+48.14	-77.40	2058829.989	954581.580
9885	799+40.12	-82.29	2058819.923	954581.380
9886	799+60.36	-46.72	2058855.719	954602.841
9943	798+09.60	0.00	2058749.225	954724.498
9944	796+66.45	0.00	2058635.440	954811.353

SURVEY NOTES:
1. ALL DIMENSIONS ARE MEASURED UNLESS NOTED OTHERWISE.
2. BEARINGS, DISTANCES AND COORDINATES SHOWN HEREON REFERENCE THE ILLINOIS STATE PLANE COORDINATE SYSTEM, EAST ZONE, NAD83 (2011 ADJUSTMENT) "GRID".
3. ALL MEASURED AND CALCULATED DISTANCES ARE "GRID" NOT "GROUND". TO OBTAIN GROUND DISTANCES, DIVIDE GRID DISTANCES SHOWN BY THE SCALE FACTOR OF 0.9999376.
4. AREAS SHOWN ON THIS PLAT ARE "GROUND".
5. FIELD SURVEY COMPLETED ON MARCH 26, 2020.

PARCEL NUMBER	TOTAL HOLDINGS ACRES	PART TAKEN ACRES	AREA IN EXISTING R.O.W. ACRES	REMAINDER AREA ACRES	EASEMENT AREA ACRES	EASEMENT AREA SQUARE FEET	PARCEL INDEX NUMBER
1NU0101 1NU0101TE	0.300	0.006 2?9 S.F.		0.294	0.004	151	13-05-403-003
1NU0102 1NU0102TE	0.239	0.033		0.206	0.041	N/A	13-05-403-002
1NU0103	0.125	0.125		0.000	N/A	N/A	13-05-403-001
1NU0104	0.044	0.044		0.000	0.000	N/A	13-05-402-011
1NU0105 1NU0105TE	0.206	0.057	0.026	0.152	0.018	N/A	13-05-402-002
1NU0106	0.163	0.011		0.152	0.000	N/A	13-05-402-046
1NU0139A 1NU0139B 1NU0139TE	0.163	A-0.002 71 S.F. B-0.004 163 S.F.		0.157	0.004	152	13-05-402-046

REVISION DATE: / / REVISION MADE BY:

LEGEND

SECTION CORNER
QUARTER SECTION CORNER
GRAPHIC SCALE FEET
SCALE: 1"=30'

- SECTION / QUARTER SECTION LINE
- PLATTED LOT LINES
- PROPERTY (DEED) LINE
- APL APPARENT PROPERTY LINE
- EXISTING CENTERLINE
- PROPOSED CENTERLINE
- EXISTING RIGHT OF WAY LINE
- PROPOSED RIGHT OF WAY LINE
- EXISTING EASEMENT
- PROPOSED EASEMENT
- AC EXISTING ACCESS CONTROL LINE
- AC PROPOSED ACCESS CONTROL LINE
- 129.22' MEASURED DIMENSION
- 129.32' (COMP) COMPUTED DIMENSION
- (129.22') RECORDED DIMENSION
- EXISTING BUILDING

(A) R=1860.08' L=33.26' CH=33.26' S41°51'51"E
(B) R=1866.08' L=42.99' CH=42.99' S41°51'09"E
(C) R=1860.08' L=98.70' CH=98.68' S39°49'55"E
(D) S38°28'33"E 22.46'
(E) R=1855.08' L=3.73' CH=3.73' S41°08'34"E
(F) S00°40'25"E 30.03'
(G) R=1877.00' L=35.37' CH=35.37' S38°12'26"E
(H) N01°08'06"E 9.55'
(I) S37°37'31"E 6.12'
(J) S37°37'31"E 3.37'
(K) R=860.08' L=61.45' CH=61.43' N33°02'15"W
(L) S30°57'15"W 34.96'
(M) N00°35'02"W 5.40'(5.40')
(N) R=860.08' L=34.10' CH=34.10' N35°31'11"W
(O) N37°21'21"W 36.46'
(P) R=871.50' L=29.61' CH=29.61' N35°22'56"W
(Q) N78°10'49"E 12.48'
(R) R=860.08' L=24.23' CH=24.23' S35°32'55"E
(S) HOUSE CORNER 3.6'N. OF PROPOSED R.O.W. LINE
(T) PORCH CORNER 5.0'N. OF PROPOSED R.O.W. LINE
(U) S30°56'38"W 41.74'
(V) N01°08'06"E 10.07'
(W) S52°28'39"W 4.49'
(X) R=860.08' L=33.31' CH=33.31' N29°52'52"W

BEARINGS ARE REFERENCED TO THE ILLINOIS STATE PLANE COORDINATE SYSTEM, NAD83 (2011 ADJUSTMENT), EAST ZONE.

- ○ IRON PIPE OR ROD FOUND
- + CUT CROSS FOUND OR SET
- ⊕ "MAG" NAIL SET
- ● 5 / 8"REBAR SET
- ■ STAKING OF PROPOSED RIGHT OF WAY. SET DIVISION OF HIGHWAYS SURVEY MARKER TO MONUMENT THE POSITION SHOWN. IDENTIFIED BY INSCRIPTION DATA AND SURVEYORS REGISTRATION NUMBER.
- ■ M STAKING OF PROPOSED RIGHT OF WAY IN CULTIVATED AREAS. BURIED 5/8 INCH METAL ROD 20 INCHES BELOW GROUND TO MARK FUTURE SURVEY MARKER POSITION IDENTIFIED BY COLORED PLASTIC CAP BEARING SURVEYORS REGISTRATION NUMBER.
- ◓ PERMANENT SURVEY MARKER, I.D.O.T. STANDARD 667101-02 (TO BE SET BY OTHERS)
- □ RIGHT OF WAY STAKING PROPOSED TO BE SET
- T.E.L. TEMPORARY EASEMENT LINE

STATE OF ILLINOIS)
) ISS
COUNTY OF WILL)

THIS IS TO CERTIFY THAT I, KENNETH J. PESAVENTO, AN ILLINOIS PROFESSIONAL LAND SURVEYOR, (WE, RUETTIGER, TONELLI & ASSOCIATES, AN ILLINOIS PROFESSIONAL DESIGN FIRM LAND SURVEYING CORPORATION, NUMBER 184-001251,) HAVE SURVEYED THE PLAT OF HIGHWAYS SHOWN HEREON IN SECTION 5, TOWNSHIP 44 NORTH, RANGE 7 EAST OF THE THIRD PRINCIPAL MERIDIAN, McHENRY COUNTY, THAT THE SURVEY IS TRUE AND COMPLETE AS SHOWN TO THE BEST OF MY KNOWLEDGE AND BELIEF, THAT THE PLAT CORRECTLY REPRESENTS SAID SURVEY, THAT ALL MONUMENTS FOUND AND ESTABLISHED ARE OF PERMANENT QUALITY AND OCCUPY THE POSITIONS SHOWN THEREON AND THAT THE MONUMENTS ARE SUFFICIENT TO ENABLE THE SURVEY TO BE RETRACED, MADE FOR THE DEPARTMENT OF TRANSPORTATION, STATE OF ILLINOIS.

DATED AT SHOREWOOD, ILLINOIS THIS 28TH DAY OF JANUARY 2025 A.D.

KENNETH J. PESAVENTO
3425 PROFESSIONAL LAND SURVEYOR STATE OF ILLINOIS
ILLINOIS PROFESSIONAL LAND SURVEYOR NO. 3425
LICENSE EXPIRATION DATE: 11-30-2026

THIS PROFESSIONAL SERVICE CONFORMS TO THE CURRENT ILLINOIS MINIMUM STANDARDS FOR A BOUNDARY SURVEY.

Ruettiger, Tonelli & Associates, Inc.
Surveyors • Engineers • Planners • Landscape Architects • GIS Consultants
129 CAPISTA DRIVE - SHOREWOOD, ILLINOIS 60404
PH. (815) 744-6600 FAX (815) 744-6181
website: www.ruettigertonelli.com

R.T. & A. Dwg. No.: 2020-0163.00

PLAT OF HIGHWAYS
STATE OF ILLINOIS
DEPARTMENT OF TRANSPORTATION
ILLINOIS ROUTE 47

LIMITS: IL 120 TO US 14 — COUNTY: McHENRY
SECTION: — JOB NO.: R-91-019-17
STA. 794+91.38 TO STA. 799+01.01
SCALE: 1"=30' — SHEET 49 OF 67 SHEETS

IDOT USE ONLY

BUREAU OF LAND ACQUISITION
201 WEST CENTER COURT
SCHAUMBURG, ILLINOIS 60196

FOR REFERENCE ONLY - N.T.S.

AECOM
303 EAST WACKER DRIVE, SUITE 1400
CHICAGO, IL 60601-5276
PHONE: (312) 373-7700 FAX: (312) 373-6800

USER NAME = muniza	DESIGNED -	REVISED -	
	DRAWN -	REVISED -	
PLOT SCALE = 100.0000 ' / in.	CHECKED -	REVISED -	
PLOT DATE = 2/7/2025	DATE -	REVISED -	

STATE OF ILLINOIS
DEPARTMENT OF TRANSPORTATION

SCALE: — SHEET OF SHEETS — STA. — TO STA.

F.A.P. RTE.	SECTION	COUNTY	TOTAL SHEETS	SHEET NO.
326	2024-1052-N,C,SW,FL	McHENRY	941	620
		CONTRACT NO. 62X94		
		ILLINOIS FED. AID PROJECT		

MODEL: Default
FILE NAME: pw:\\aecom-na-pw.bentley.com:AECOM_0521_NA_2020\Documents\60632011-IL-47\900-CAD\910_CAD\03_SHEETS\General\D160X17-sht-PLAT.dgn

PART OF THE SW 1/4 OF SECTION 5 TWP.44N., R.7E. OF THE 3RD. P.M., IN McHENRY COUNTY, ILLINOIS.

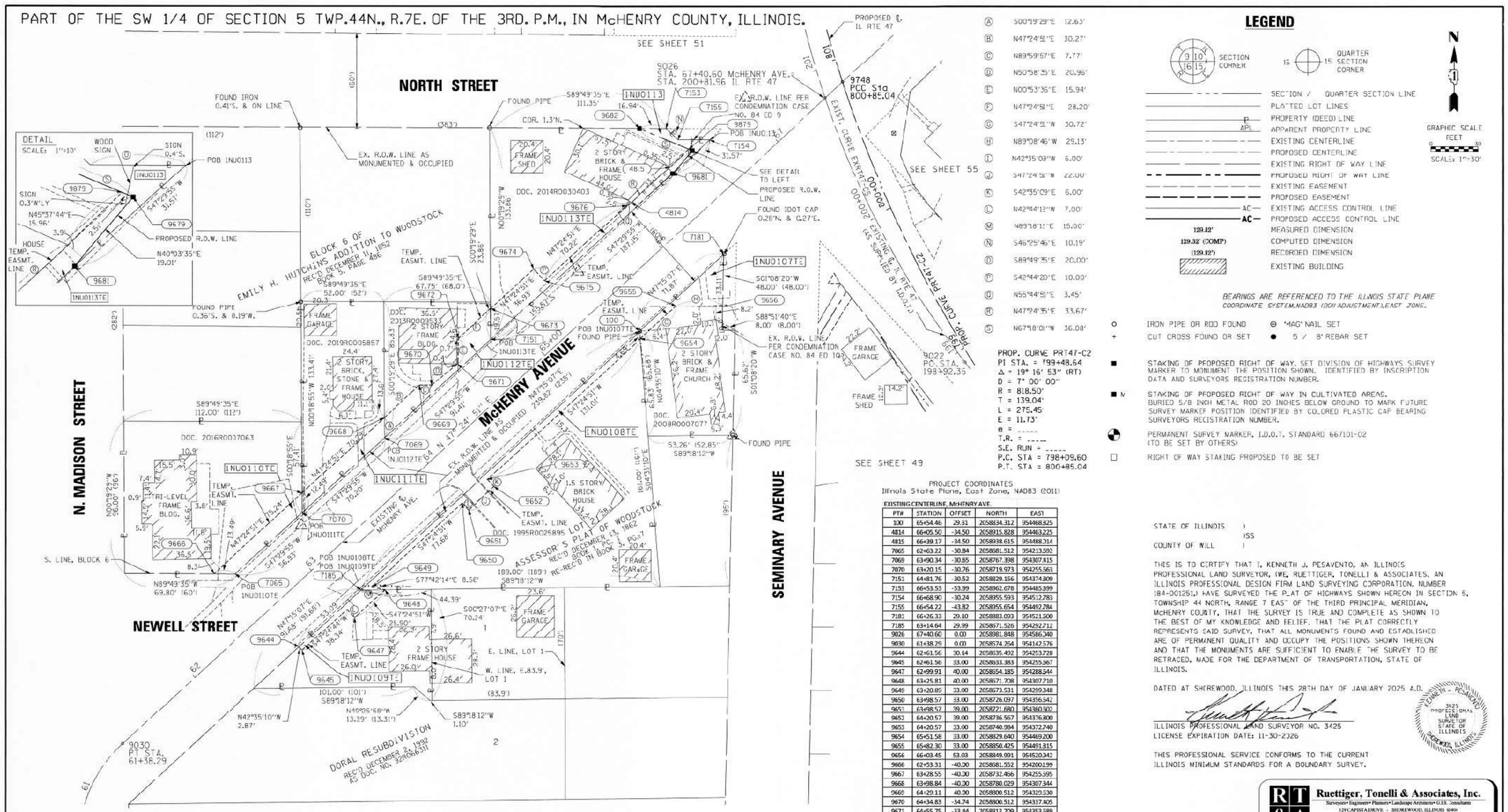

Ⓐ	S00°19'29"E	12.63'
Ⓑ	N47°24'51"E	30.27'
Ⓒ	N89°59'57"E	7.77'
Ⓓ	N50°58'35"E	20.96'
Ⓔ	N00°53'36"E	15.94'
Ⓕ	N47°24'51"E	28.20'
Ⓖ	S47°24'51"W	30.72'
Ⓗ	N89°08'46"W	29.13'
Ⓘ	N42°35'09"W	6.00'
Ⓙ	S47°24'51"W	22.00'
Ⓚ	S42°35'09"E	6.00'
Ⓛ	N42°44'12"W	7.00'
Ⓜ	N89°18'11"E	15.00'
Ⓝ	S46°25'46"E	10.19'
Ⓞ	S89°49'35"E	20.00'
Ⓟ	S42°44'20"E	10.00'
Ⓠ	N55°44'51"E	3.45'
Ⓡ	N47°24'35"E	33.67'
Ⓢ	N67°18'01"W	36.08'

PROP. CURVE PRT47-C2
PI STA. = 199+48.64
Δ = 19° 16' 53" (RT)
D = 7° 00' 00"
R = 818.50'
T = 139.04'
L = 275.45
E = 11.73'
e = -----
T.R. = -----
S.E. RUN = -----
P.C. STA = 198+09.60
P.T. STA = 800+85.04

EXIST. CURVE EXRT47-C5
PI STA. = 200+85.45
Δ = 37° 14' 58" (RT)
D = 10° 00' 00"
R = 572.96'
T = 193.10'
L = 372.50'
E = 31.66'
e = -----
T.R. = -----
S.E. RUN = -----
P.C. STA. = 198+92.35
P.T. STA. = 202+64.85

PROJECT COORDINATES
Illinois State Plane, East Zone, NAD83 (2011)
EXISTING CENTERLINE, McHENRY AVE.

PT#	STATION	OFFSET	NORTH	EAST
100	65+54.46	29.51	2058834.312	954468.525
4814	66+05.50	-34.50	2058915.828	954463.225
4815	66+39.17	-34.50	2058938.615	954488.314
7065	62+63.22	-30.84	2058681.512	954213.592
7069	63+90.34	-30.65	2058767.398	954307.415
7070	63+20.15	-30.76	2058719.973	954255.563
7151	64+81.76	30.52	2058829.156	954374.809
7153	66+53.53	-53.99	2058962.678	954485.399
7154	66+68.90	-30.24	2058955.593	954512.783
7155	66+54.22	-43.82	2058955.654	954492.784
7181	66+26.33	29.40	2058883.093	954521.500
7185	63+14.64	29.99	2058671.526	954292.712
9026	67+40.60	0.00	2058981.848	954586.340
9030	61+38.29	0.00	2058574.264	954142.576
9644	62+61.56	30.14	2058635.492	954253.728
9645	62+61.56	33.00	2058633.383	954255.367
9647	62+99.91	40.00	2058654.185	954288.544
9648	63+25.81	40.00	2058671.708	954307.710
9649	63+20.85	33.00	2058673.531	954299.348
9650	63+98.57	33.00	2058726.097	954356.342
9651	63+98.57	39.00	2058727.680	954360.507
9652	64+20.57	39.00	2058736.567	954376.800
9653	64+20.57	33.00	2058740.984	954372.740
9654	65+51.58	33.00	2058829.640	954469.200
9655	65+82.30	33.00	2058850.425	954491.315
9656	66+03.45	53.03	2058849.991	954520.342
9666	62+53.31	-40.30	2058081.552	954200.199
9667	63+28.55	-40.30	2058732.466	954255.595
9668	63+98.84	-40.30	2058780.029	954307.344
9669	64+29.11	40.30	2058800.512	954329.530
9670	64+34.83	-34.74	2058800.512	954317.405
9671	64+55.75	-33.44	2058813.709	954353.589
9672	64+66.72	-45.30	2058829.644	954353.337
9673	64+94.92	-45.30	2058848.725	954374.598
9674	65+31.85	-45.30	2058873.715	954401.588
9675	65+31.87	-35.30	2058866.370	954408.575
9676	66+02.09	-35.30	2058913.888	954460.376
9678	66+56.18	-32.72	2058948.808	954501.737
9681	66+37.33	-30.29	2058934.262	954489.305
9682	66+41.09	-65.49	2058962.730	954468.456
9748	67+55.46	0.00	2058991.921	954596.399
9879	66+55.13	-35.30	2058949.778	954499.825

PARCEL NUMBER	TOTAL HOLDINGS ACRES	PART TAKEN ACRES	AREA IN EXISTING R.O.W. ACRES	REMAINDER AREA ACRES	EASEMENT AREA ACRES	EASEMENT AREA SQUARE FEET	PARCEL INDEX NUMBER
INU0107TE	0.114	N/A		0.114	0.015		13-05-333-011
INU0108TE	0.349	N/A		0.349	0.021		13-05-333-001
INU0109TE	0.112	N/A		0.112	0.007	315	13-05-333-017
INU0110TE	0.228	N/A		0.228	0.014		13-05-332-004
INU0111TE	0.131	N/A		0.131	0.015		13-05-332-008
INU0112TE	0.085	N/A		0.085	0.019		13-05-332-009
INU0113 INU0113TE	0.220	0.005 218S.F.		0.215	0.027		13-05-332-010

SURVEY NOTES:
1. ALL DIMENSIONS ARE MEASURED UNLESS NOTED OTHERWISE.
2. BEARINGS, DISTANCES AND COORDINATES SHOWN HEREON REFERENCE THE ILLINOIS STATE PLANE COORDINATE SYSTEM, EAST ZONE, NAD83 (2011 ADJUSTMENT) 'GRID'.
3. ALL MEASURED AND CALCULATED DISTANCES AREA "GRID" NOT "GROUND". TO OBTAIN GROUND DISTANCES, DIVIDE GRID DISTANCES SHOWN BY THE SCALE FACTOR OF 0.99993761.
4. AREAS SHOWN ON THIS PLAT ARE "GROUND".
5. FIELD SURVEY COMPLETED ON MARCH 26, 2020.

LEGEND

SECTION CORNER — 15 QUARTER SECTION CORNER

GRAPHIC SCALE FEET — SCALE: 1"=30'

- SECTION / QUARTER SECTION LINE
- PLATTED LOT LINES
- P — PROPERTY (DEED) LINE
- APL — APPARENT PROPERTY LINE
- EXISTING CENTERLINE
- PROPOSED CENTERLINE
- EXISTING RIGHT OF WAY LINE
- PROPOSED RIGHT OF WAY LINE
- EXISTING EASEMENT
- PROPOSED EASEMENT
- AC — EXISTING ACCESS CONTROL LINE
- AC — PROPOSED ACCESS CONTROL LINE
- 129.12' MEASURED DIMENSION
- 129.32' (COMP) COMPUTED DIMENSION
- (129.12') RECORDED DIMENSION
- EXISTING BUILDING

BEARINGS ARE REFERENCED TO THE ILLINOIS STATE PLANE COORDINATE SYSTEM, NAD83 (2011 ADJUSTMENT), EAST ZONE.

- ○ IRON PIPE OR ROD FOUND
- + CUT CROSS FOUND OR SET
- ⊕ "MAG" NAIL SET
- ● 5/8" REBAR SET
- ■ STAKING OF PROPOSED RIGHT OF WAY. SET DIVISION OF HIGHWAYS SURVEY MARKER TO MONUMENT THE POSITION SHOWN. IDENTIFIED BY INSCRIPTION DATA AND SURVEYORS REGISTRATION NUMBER.
- ■ N STAKING OF PROPOSED RIGHT OF WAY IN CULTIVATED AREAS. BURIED 5/8 INCH METAL ROD 20 INCHES BELOW GROUND TO MARK FUTURE SURVEY MARKER POSITION IDENTIFIED BY COLORED PLASTIC CAP BEARING SURVEYORS REGISTRATION NUMBER.
- ◔ PERMANENT SURVEY MARKER, I.D.O.T. STANDARD 6671D1-02 (TO BE SET BY OTHERS)
- □ RIGHT OF WAY STAKING PROPOSED TO BE SET

STATE OF ILLINOIS)
)SS
COUNTY OF WILL)

THIS IS TO CERTIFY THAT I, KENNETH J. PESAVENTO, AN ILLINOIS PROFESSIONAL LAND SURVEYOR, (WE, RUETTIGER, TONELLI & ASSOCIATES, AN ILLINOIS PROFESSIONAL DESIGN FIRM LAND SURVEYING CORPORATION, NUMBER 184-001251,) HAVE SURVEYED THE PLAT OF HIGHWAYS SHOWN HEREON IN SECTION 5, TOWNSHIP 44 NORTH, RANGE 7 EAST OF THE THIRD PRINCIPAL MERIDIAN, McHENRY COUNTY, THAT THE SURVEY IS TRUE AND COMPLETE AS SHOWN TO THE BEST OF MY KNOWLEDGE AND BELIEF, THAT THE PLAT CORRECTLY REPRESENTS SAID SURVEY, THAT ALL MONUMENTS FOUND AND ESTABLISHED ARE OF PERMANENT QUALITY AND OCCUPY THE POSITIONS SHOWN THEREON AND THAT THE MONUMENTS ARE SUFFICIENT TO ENABLE THE SURVEY TO BE RETRACED, MADE FOR THE DEPARTMENT OF TRANSPORTATION, STATE OF ILLINOIS.

DATED AT SHOREWOOD, ILLINOIS THIS 28TH DAY OF JANUARY 2025 A.D.

ILLINOIS PROFESSIONAL LAND SURVEYOR NO. 3425
LICENSE EXPIRATION DATE: 11-30-2026

KENNETH J. PESAVENTO 3425 PROFESSIONAL LAND SURVEYOR STATE OF ILLINOIS SHOREWOOD, ILLINOIS

THIS PROFESSIONAL SERVICE CONFORMS TO THE CURRENT ILLINOIS MINIMUM STANDARDS FOR A BOUNDARY SURVEY.

Ruettiger, Tonelli & Associates, Inc.
Surveyors • Engineers • Planners • Landscape Architects • GIS Consultants
129 CAPISTA DRIVE - SHOREWOOD, ILLINOIS 60404
PH. (815) 744-6400 FAX: (815) 744-6031
website: www.rttengineering.com

R.T. & A. Dwg. No.: 2020-0163.00

PLAT OF HIGHWAYS
STATE OF ILLINOIS
DEPARTMENT OF TRANSPORTATION
ILLINOIS ROUTE 47

LIMITS: IL 120 TO US 14 — COUNTY: McHENRY
SECTION: — JOB NO.: R-9-019-17
STA. 62+53.31 TO STA. 67+40.60
SCALE: 1"=30' — SHEET 50 OF 57 SHEETS

IDOT USE ONLY

BUREAU OF LAND ACQUISITION
201 WEST CENTER COURT
SCHAUMBURG, ILLINOIS 60196

REVISION DATE: / / REVISION MADE BY:

FOR REFERENCE ONLY - N.T.S.

AECOM
303 EAST WACKER DRIVE, SUITE 1400
CHICAGO, IL 60601-5276
PHONE: (312) 373-7700 FAX: (312) 373-6800

USER NAME = muniza	DESIGNED -	REVISED -	
	DRAWN -	REVISED -	
PLOT SCALE = 100.0000 ' / in.	CHECKED -	REVISED -	
PLOT DATE = 2/7/2025	DATE -	REVISED -	

STATE OF ILLINOIS
DEPARTMENT OF TRANSPORTATION

SCALE: | SHEET OF SHEETS | STA. TO STA.

F.A.P. RTE.	SECTION	COUNTY	TOTAL SHEETS	SHEET NO.
326	2024-1052-N,C,SW,FL	MCHENRY	941	621
		CONTRACT NO. 62X94		
	ILLINOIS	FED. AID PROJECT		

MODEL: Default
FILE NAME: pw:\\aecom-na-pw.bentley.com:AECOM_DS21_NA_2020Documents\60632011-IL-47900-CAD910_CAD\03_SHEETS\General\D160X17-sht-PLAT.dgn

PART OF THE NW 1/4 & SW 1/4 OF SECTION 5 TWP.44N., R.7E. OF THE 3RD. P.M., IN McHENRY COUNTY, ILLINOIS.

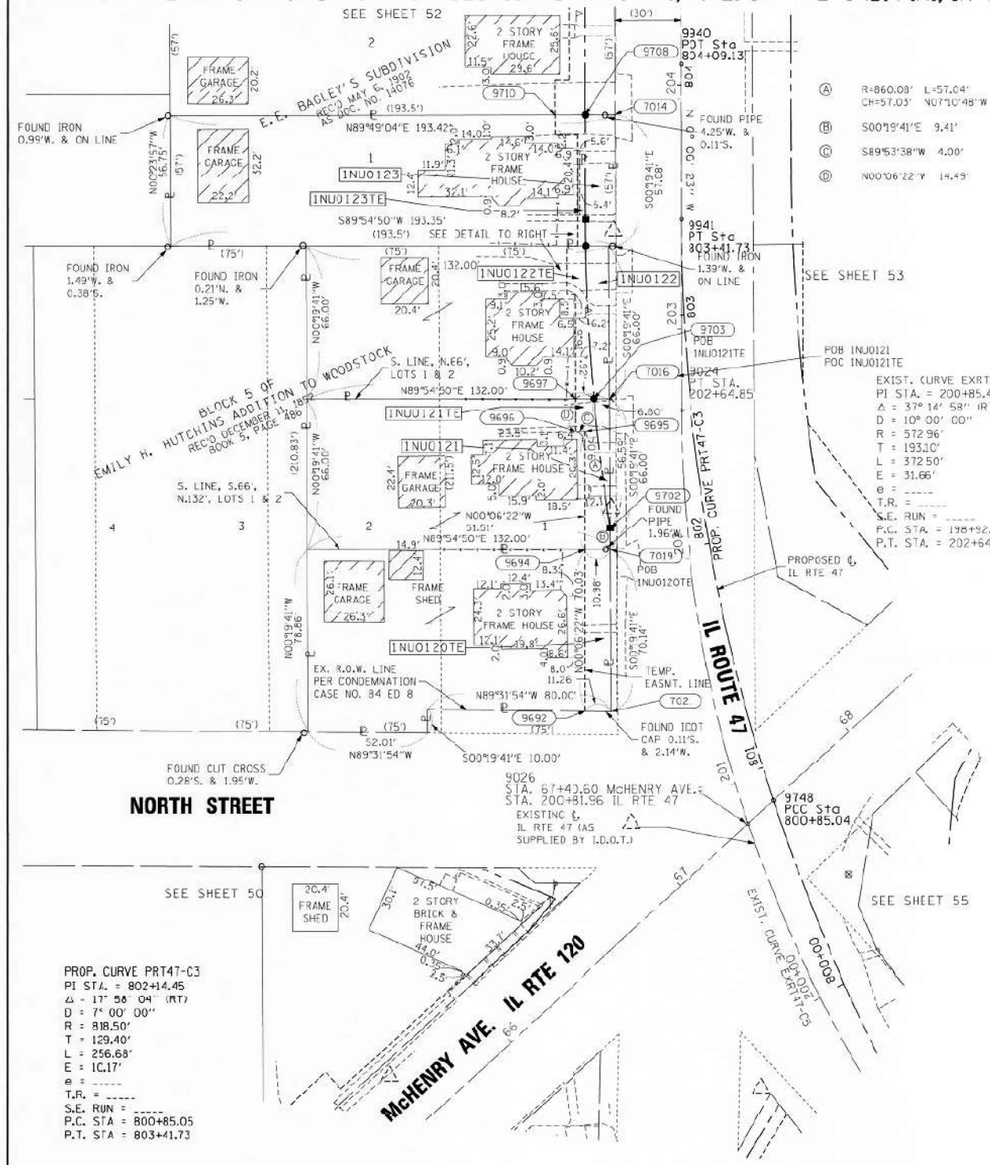

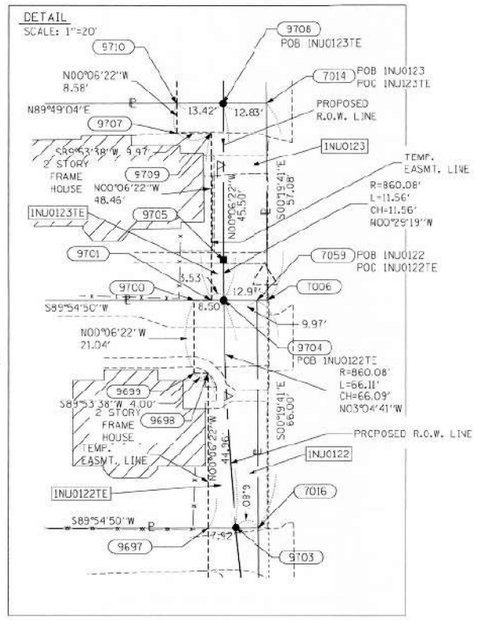

LEGEND

SECTION CORNER — 15 QUARTER SECTION CORNER

GRAPHIC SCALE FEET — SCALE: 1"=30'

- SECTION / QUARTER SECTION LINE
- PLATTED LOT LINES
- P — PROPERTY (DEED) LINE
- APL — APPARENT PROPERTY LINE
- EXISTING CENTERLINE
- PROPOSED CENTERLINE
- EXISTING RIGHT OF WAY LINE
- PROPOSED RIGHT OF WAY LINE
- EXISTING EASEMENT
- PROPOSED EASEMENT
- AC — EXISTING ACCESS CONTROL LINE
- AC — PROPOSED ACCESS CONTROL LINE
- 129.32' — MEASURED DIMENSION
- 129.32' (COMP) — COMPUTED DIMENSION
- (129.32') — RECORDED DIMENSION
- EXISTING BUILDING

BEARINGS ARE REFERENCED TO THE ILLINOIS STATE PLANE COORDINATE SYSTEM,NAD83 (2011 ADJUSTMENT),EAST ZONE.

- ○ IRON PIPE OR ROD FOUND
- + CUT CROSS FOUND OR SET
- ⊕ "MAG" NAIL SET
- ● 5 / 8"REBAR SET
- ■ STAKING OF PROPOSED RIGHT OF WAY. SET DIVISION OF HIGHWAYS SURVEY MARKER TO MONUMENT THE POSITION SHOWN. IDENTIFIED BY INSCRIPTION DATA AND SURVEYORS REGISTRATION NUMBER.
- ■ N — STAKING OF PROPOSED RIGHT OF WAY IN CULTIVATED AREAS. BURIED 5/8 INCH METAL ROD 20 INCHES BELOW GROUND TO MARK FUTURE SURVEY MARKER POSITION IDENTIFIED BY COLORED PLASTIC CAP BEARING SURVEYORS REGISTRATION NUMBER.
- ◒ PERMANENT SURVEY MARKER, I.D.O.T. STANDARD 667101-02 (TO BE SET BY OTHERS)
- □ RIGHT OF WAY STAKING PROPOSED TO BE SET

PROJECT COORDINATES
Illinois State Plane, East Zone, NAD83 (2011)
EXISTING CENTERLINE, IL ROUTE 47

PT#	STATION	OFFSET	NORTH	EAST
7006	203+36.03	-28.53	2059232.724	954528.106
7014	203+93.11	-28.75	2059289.802	954527.780
7016	203+70.04	-31.27	2059166.710	954525.484
7019	202+07.35	-34.07	2059100.722	954525.862
7021	201+42.46	-44.78	2059030.582	954526.264
7059	203+36.04	-31.63	2059232.710	954525.106
9024	202+64.85	0.00	2059161.660	954556.766
9026	200+81.96	0.00	2058981.848	954586.040
9692	201+44.74	-55.76	2059030.674	954515.009
9694	202+08.38	-45.00	2059100.705	954514.879
9695	202+56.19	-42.07	2059152.219	954514.783
9696	202+56.25	-49.07	2059152.212	954510.783
9697	202+70.04	-45.00	2059166.698	954510.756
9698	203+15.00	-45.00	2059211.659	954510.673
9699	203+15.00	-50.00	2059211.652	954506.673
9700	203+36.04	-50.00	2059232.692	954506.634
9701	203+36.04	-45.03	2059232.700	954511.600
9702	202+16.20	-33.24	2059110.130	954525.808
9703	202+70.04	-38.08	2059166.730	954518.880
9704	203+36.04	-41.50	2059232.705	954515.132
9705	203+47.50	-41.58	2059244.264	954515.033
9707	203+84.50	-55.00	2059281.143	954501.545
9708	203+93.10	-41.58	2059289.761	954514.949
9709	203+84.50	-45.03	2059281.162	954511.510
9710	203+93.08	-55.00	2059289.718	954501.529
9748	200+88.21	13.54	2058991.921	954596.999
9940	204+15.00	0.00	2059311.745	954556.488
9941	203+47.50	0.00	2059244.341	954556.613

PROJECT COORDINATES
Illinois State Plane, East Zone, NAD83 (2011)
PROPOSED CENTERLINE, IL ROUTE 47

PT#	STATION	OFFSET	NORTH	EAST
7006	803+30.55	-28.61	2059232.724	954528.106
7014	803+87.24	-28.75	2059289.80.	954527.780
7016	803+67.22	-34.80	2059166.729	954525.484
7019	802+08.73	-43.06	2059100.72.	954525.862
7021	801+39.95	-57.22	2059030.58.	954526.264
7059	803+30.59	-31.61	2059232.728	954525.106
9024	802+59.25	-4.17	2059161.598	954556.766
9026	800+73.97	-13.57	2058981.841	954586.040
9692	801+42.59	-68.11	2059030.67.	954515.009
9694	802+05.42	-53.89	2059100.709	954514.879
9695	802+54.51	-46.91	2059152.219	954514.783
9696	802+54.91	-50.89	2059152.211	954510.783
9697	802+68.49	-49.47	2059166.691	954510.756
9698	803+10.88	-46.61	2059211.659	954510.673
9699	803+11.02	-50.61	2059211.65.	954506.673
9700	803+30.83	-50.08	2059232.69.	954506.634
9701	803+30.77	-45.11	2059232.709	954511.600
9702	802+13.53	-41.58	2059110.139	954525.808
9703	802+67.81	-41.38	2059166.719	954518.880
9704	803+30.72	-41.58	2059232.705	954515.132
9705	803+41.72	-41.58	2059244.26.	954515.033
9707	803+78.63	-55.00	2059281.14.	954501.545
9708	803+87.22	-41.58	2059289.76.	954514.949
9709	803+78.63	-45.03	2059281.16.	954511.510
9710	803+87.20	-55.00	2059289.718	954501.529
9748	800+85.04	0.00	2058991.92.	954596.999
9940	804+09.13	0.00	2059311.745	954556.488
9941	803+41.72	0.00	2059244.34.	954556.613

PARCEL NUMBER	TOTAL HOLDINGS ACRES	PART TAKEN ACRES	AREA IN EXISTING R.O.W. ACRES	REMAINDER AREA ACRES	EASEMENT AREA ACRES	EASEMENT AREA SQUARE FEET	PARCEL INDEX NUMBER
1NU0120TE	0.223	0.000		0.223	0.018	N/A	13-05-331-009
1NU0121 1NU0121TE	0.200	0.005 210 S.F.		0.195	0.013	N/A	13-05-331-007
1NU0122 1NU0122TE	0.200	0.013		0.187	0.011	N/A	13-05-331-006
1NU0123 1NU0123TE	0.253	0.017		0.236	0.006	283	13-05-180-018

SURVEY NOTES:
1. ALL DIMENSIONS ARE MEASURED UNLESS NOTED OTHERWISE.
2. BEARINGS, DISTANCES AND COORDINATES SHOWN HEREON REFERENCE THE ILLINOIS STATE PLANE COORDINATE SYSTEM, EAST ZONE, NAD83 (2011 ADJUSTMENT) "GRID".
3. ALL MEASURED AND CALCULATED) DISTANCES AREA "GRID" NOT "GROUND". TO OBTAIN GROUND DISTANCES, DIVIDE GRID DISTANCES SHOWN BY THE SCALE FACTOR OF 0.99993761
4. AREAS SHOWN ON THIS PLAT ARE "GROUND".
5. FIELD SURVEY COMPLETED ON MARCH 26, 2020.

REVISION DATE: / / REVISION MADE BY:

STATE OF ILLINOIS)
)SS
COUNTY OF WILL)

THIS IS TO CERTIFY THAT I, KENNETH J. PESAVENTO, AN ILLINOIS PROFESSIONAL LAND SURVEYOR, (WE, RUETTIGER, TONELL & ASSOCIATES, AN ILLINOIS PROFESSIONAL DESIGN FIRM LAND SURVEYING CORPORATION, NUMBER 184-001251,) HAVE SURVEYED THE PLAT OF HIGHWAYS SHOWN HEREON IN SECTION 5, TOWNSHIP 44 NORTH, RANGE 7 EAST OF THE THIRD PRINCIPAL MERIDIAN, McHENRY COUNTY, THAT THE SURVEY IS TRUE AND COMPLETE AS SHOWN TO THE BEST OF MY KNOWLEDGE AND BELIEF. THAT THE PLAT CORRECTLY REPRESENTS SAID SURVEY, THAT ALL MONUMENTS FOUND AND ESTABLISHED ARE OF PERMANENT QUALITY AND OCCUPY THE POSITIONS SHOWN THEREON AND THAT THE MONUMENTS ARE SUFFICIENT TO ENABLE THE SURVEY TO BE RETRACED, MADE FOR THE DEPARTMENT OF TRANSPORTATION, STATE OF ILLINOIS.

DATED AT SHOREWOOD, ILLINOIS THIS 28TH DAY OF JANUARY 2025 A.D.

ILLINOIS PROFESSIONAL LAND SURVEYOR NO. 3425
LICENSE EXPIRATION DATE: 11-30-2026

KENNETH J PESAVENTO 3425 PROFESSIONAL LAND SURVEYOR STATE OF ILLINOIS SHOREWOOD, ILLINOIS

THIS PROFESSIONAL SERVICE CONFORMS TO THE CURRENT ILLINOIS MINIMUM STANDARDS FOR A BOUNDARY SURVEY.

Ruettiger, Tonelli & Associates, Inc.
Surveyors • Engineers • Planners • Landscape Architects • GIS Consultants
129 CAPESTADRIVE - SHOREWOOD, ILLINOIS 60404
PH. 815 744-6600 FAX (815) 744-0131
website: www.ruettigertonelli.com

R.T. & A. Dwg. No.: 2020-0163.00

PLAT OF HIGHWAYS

STATE OF ILLINOIS
DEPARTMENT OF TRANSPORTATION
ILLINOIS ROUTE 47

LIMITS: IL 120 TO US 14 — COUNTY: McHENRY
SECTION: — JOB NO.: R-91-019-17
STA. 800+85.04 TO STA. 803+87.24
SCALE: 1"=30' — SHEET 61 OF 67 SHEETS

IDOT USE ONLY

BUREAU OF LAND ACQUISITION
201 WEST CENTER COURT
SCHAUMBURG, ILLINOIS 60196

FOR REFERENCE ONLY - N.T.S.

MODEL: Default
FILE NAME: pw:\\aecom-na-pw.bentley.com:AECOM DS21_NA_2020\Documents\60663011-IL-47900-CAD1910_CAD03_SHEETS\General\D160X17-sht-PLAT.dgn

AECOM
303 EAST WACKER DRIVE, SUITE 1400
CHICAGO, IL 60601-5276
PHONE: (312) 373-7700 FAX: (312) 373-6800

USER NAME = muniza	DESIGNED -	REVISED -
	DRAWN -	REVISED -
PLOT SCALE = 100.0000 ' / in.	CHECKED -	REVISED -
PLOT DATE = 2/7/2025	DATE -	REVISED -

STATE OF ILLINOIS
DEPARTMENT OF TRANSPORTATION

SCALE: SHEET OF SHEETS STA. TO STA.

F.A.P. RTE.	SECTION	COUNTY	TOTAL SHEETS	SHEET NO.
326	2024-1052-N,C,SW,FL	MCHENRY	941	622
		CONTRACT NO. 62X94		
	ILLINOIS FED. AID PROJECT			

PART OF THE NW 1/4 OF SECTION 5 TWP.44N., R.7E. OF THE 3RD. P.M., IN McHENRY COUNTY, ILLINOIS.

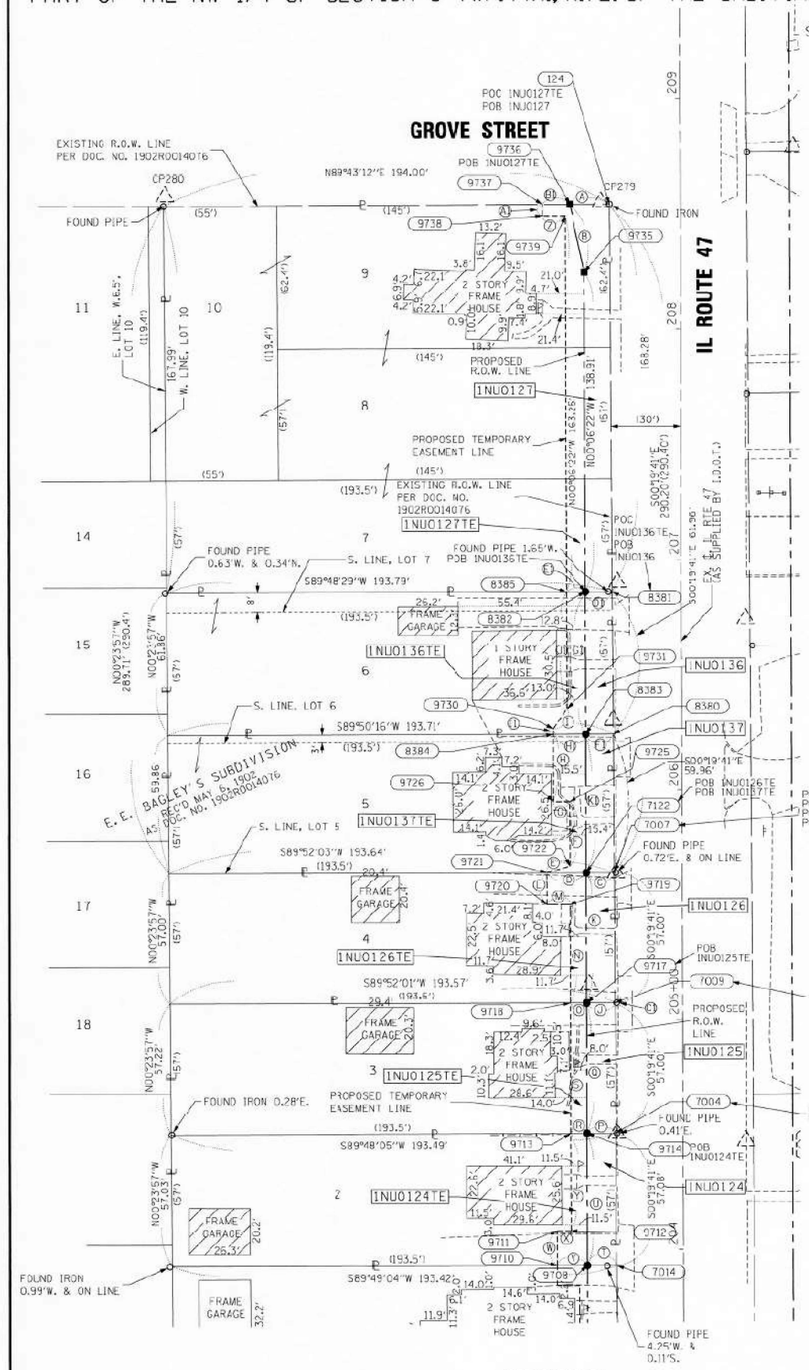

Ⓐ	N89°43'12"E	17.50'
Ⓑ	N12°30'57"W	30.04'
Ⓒ	S89°52'03"W	12.17'
Ⓓ	S89°52'03"W	17.42'
Ⓔ	N74°06'27"E	10.39'
Ⓕ	N00°06'23"W	28.00'
Ⓖ	S89°53'37"W	7.00'
Ⓗ	N00°06'21"W	31.43'
Ⓘ	N34°53'02"E	10.39'
Ⓙ	S89°52'01"W	12.39'
Ⓚ	N00°06'22"W	57.00'
Ⓛ	N00°06'35"W	14.11'
Ⓜ	S89°53'28"W	10.00'
Ⓝ	N00°06'22"W	42.82'
Ⓞ	N89°52'01"E	7.42'
Ⓟ	S89°48'05"W	12.61'
Ⓠ	N00°06'22"W	57.01'
Ⓡ	S89°48'05"W	7.42'
Ⓢ	N00°06'22"W	57.02'
Ⓣ	S89°49'04"W	12.83'
Ⓤ	N00°06'22"W	57.08'
Ⓥ	S89°49'04"W	13.42'
Ⓦ	N00°06'22"W	14.93'
Ⓧ	N89°53'42"E	6.00'
Ⓨ	N00°06'23"W	42.16'
Ⓩ	S89°43'12"W	10.00'
Ⓐ1	N00°16'48"W	5.00'
Ⓑ1	N89°43'12"E	12.02'
Ⓒ1	FOUND PIPE 0.62'E. & ON LINE	
Ⓓ1	S89°48'29"W	11.70'
Ⓔ1	S89°48'29"W	8.46'
Ⓕ1	S89°50'16"W	11.94'
Ⓖ1	N00°06'22"W	61.95'
Ⓗ1	S89°50'16"W	14.42'
Ⓘ1	N00°06'21"W	2.31'
Ⓙ1	N00°06'22"W	51.14'
Ⓚ1	N00°06'22"W	59.95'

PROJECT COORDINATES
Illinois State Plane, East Zone, NAD83 (2011)

EXISTING CENTERLINE, IL ROUTE 47

PT#	STATION	OFFSET	NORTH	EAST
124	208+54.39	-30.53	2059751.075	954525.139
279	208+55.30	-34.28	2059751.980	954521.390
280	208+58.10	-23.83	2059754.424	954531.837
7004	204+50.19	-21.97	2059346.881	954527.453
7007	205+64.19	-29.41	2059460.677	954526.800
7009	205+07.19	-29.19	2059403.880	954527.127
7014	203+93.11	-28.75	2059289.802	954527.780
7122	205+64.18	-41.58	2059460.849	954514.632
8380	206+24.15	-29.64	2059520.836	954526.457
8381	206+86.1	-29.88	2059582.795	954526.102
8382	206+86.09	-41.58	2059582.756	954514.406
8383	206+24.14	-41.58	2059520.802	954514.521
8384	206+24.12	-56.00	2059520.761	954500.100
8385	206+80.08	-50.04	2059582.727	954505.943
9708	203+93.10	-41.58	2059289.761	954514.949
9710	203+93.08	-56.00	2059289.718	954501.529
9711	204+08.00	-56.00	2059304.643	954501.501
9712	204+08.00	-49.00	2059304.654	954507.501
9713	204+50.16	-49.00	2059346.811	954507.423
9714	204+50.17	-41.58	2059346.837	954514.843
9717	205+07.19	-41.58	2059403.851	954514.737
9718	205+07.18	-49.00	2059403.834	954507.317
9719	205+50.00	-49.00	2059446.654	954507.238
9720	205+50.00	-56.00	2059446.635	954497.238
9721	205+64.18	-56.00	2059460.808	954497.211
9722	205+67.00	-49.00	2059463.654	954507.206
9725	205+95.00	-49.00	2059491.654	954507.154
9726	205+95.00	-56.00	2059491.941	954500.154
9730	206+26.43	-56.00	2059523.069	954500.096
9731	206+34.94	-53.04	2059531.591	954506.038
9735	208+25.00	-41.58	2059711.667	954514.148
9736	208+54.34	-46.00	2059730.989	954507.639
9737	208+54.30	-61.06	2059730.931	954495.616
9738	208+49.30	-61.04	2059745.931	954495.640
9739	208+49.33	-53.04	2059745.980	954505.640

PROPOSED CENTERLINE, IL ROUTE 47

PT#	STATION	OFFSET	NORTH	EAST
9710	803+87.20	56.00	2059289.718	954501.529
9708	803+87.22	-41.58	2059289.761	954514.949
7014	803+87.24	-28.75	2059289.802	954527.780
9712	804+02.13	-49.00	2059304.654	954507.501
9711	804+02.13	-56.00	2059304.643	954501.501
9940	804+09.13	0.00	2059311.745	954556.488

SURVEY NOTES:
1. ALL DIMENSIONS ARE MEASURED UNLESS NOTED OTHERWISE.
2. BEARINGS, DISTANCES AND COORDINATES SHOWN HEREON REFERENCE THE ILLINOIS STATE PLANE COORDINATE SYSTEM, EAST ZONE, NAD83 (2011 ADJUSTMENT) "GRID".
3. ALL MEASURED AND CALCULATED DISTANCES AREA "GRID" NOT "GROUND". TO OBTAIN GROUND DISTANCES, DIVIDE GRID DISTANCES SHOWN BY THE SCALE FACTOR OF 0.99993761.
4. AREAS SHOWN ON THIS PLAT ARE "GROUND".
5. FIELD SURVEY COMPLETED ON MARCH 26, 2020.

PARCEL NUMBER	TOTAL HOLDINGS ACRES	PART TAKEN ACRES	AREA IN EXISTING R.O.W. ACRES	REMAINDER AREA ACRES	EASEMENT AREA ACRES	EASEMENT AREA SQUARE FEET	PARCEL INDEX NUMBER
1NU0124 1NU0124TE	0.253	0.017		0.236	0.012		13-05-180-017
1NU0125 1NU0125TE	0.254	0.016		0.238	0.010		13-05-180-016
1NU0126 1NU0126TE	0.253	0.016		0.237	0.013		13-05-180-015
1NU0127 1NU0127TE	0.748	0.046		0.702	0.032		13-05-180-012
1NU0136 1NU0136TE	0.275	0.017		0.258	0.013		13-05-180-019
1NU0137 1NU0137TE	0.266	0.017		0.249	0.015		13-05-180-021

REVISION DATE: / / REVISION MADE BY:

LEGEND

SECTION CORNER
QUARTER SECTION CORNER

N
GRAPHIC SCALE FEET
0 30
SCALE: 1"=30'

- SECTION / QUARTER SECTION LINE
- PLATTED LOT LINES
- P PROPERTY (DEED) LINE
- APL APPARENT PROPERTY LINE
- EXISTING CENTERLINE
- PROPOSED CENTERLINE
- EXISTING RIGHT OF WAY LINE
- PROPOSED RIGHT OF WAY LINE
- EXISTING EASEMENT
- PROPOSED EASEMENT
- AC EXISTING ACCESS CONTROL LINE
- AC PROPOSED ACCESS CONTROL LINE
- 129.32' MEASURED DIMENSION
- 129.32' (COMP) COMPUTED DIMENSION
- (129.32') RECORDED DIMENSION
- EXISTING BUILDING

BEARINGS ARE REFERENCED TO THE ILLINOIS STATE PLANE COORDINATE SYSTEM, NAD83 (2011 ADJUSTMENT), EAST ZONE.

- ○ IRON PIPE OR ROD FOUND
- + CUT CROSS FOUND OR SET
- ⊕ "MAG" NAIL SET
- ● 5/8" REBAR SET
- ■ STAKING OF PROPOSED RIGHT OF WAY, SET DIVISION OF HIGHWAYS SURVEY MARKER TO MONUMENT THE POSITION SHOWN, IDENTIFIED BY INSCRIPTION DATA AND SURVEYORS REGISTRATION NUMBER.
- ■ N STAKING OF PROPOSED RIGHT OF WAY IN CULTIVATED AREAS, BURIED 5/8 INCH METAL ROD 20 INCHES BELOW GROUND TO MARK FUTURE SURVEY MARKER POSITION IDENTIFIED BY COLORED PLASTIC CAP BEARING SURVEYORS REGISTRATION NUMBER.
- ◔ PERMANENT SURVEY MARKER, I.D.O.T. STANDARD 667101-02 (TO BE SET BY OTHERS)
- □ RIGHT OF WAY STAKING PROPOSED TO BE SET

STATE OF ILLINOIS)
)SS
COUNTY OF WILL)

THIS IS TO CERTIFY THAT I, KENNETH J. PESAVENTO, AN ILLINOIS PROFESSIONAL LAND SURVEYOR, OF RUETTIGER, TONELLI & ASSOCIATES, AN ILLINOIS PROFESSIONAL DESIGN FIRM LAND SURVEYING CORPORATION, NUMBER 184-001251, HAVE SURVEYED THE PLAT OF HIGHWAYS SHOWN HEREON IN SECTION 5, TOWNSHIP 44 NORTH, RANGE 7 EAST OF THE THIRD PRINCIPAL MERIDIAN, McHENRY COUNTY, THAT THE SURVEY IS TRUE AND COMPLETE AS SHOWN TO THE BEST OF MY KNOWLEDGE AND BELIEF, THAT THE PLAT CORRECTLY REPRESENTS SAID SURVEY, THAT ALL MONUMENTS FOUND AND ESTABLISHED ARE OF PERMANENT QUALITY AND OCCUPY THE POSITIONS SHOWN THEREON AND THAT THE MONUMENTS ARE SUFFICIENT TO ENABLE THE SURVEY TO BE RETRACED, MADE FOR THE DEPARTMENT OF TRANSPORTATION, STATE OF ILLINOIS.

DATED AT SHOREWOOD, ILLINOIS THIS 28TH DAY OF JANUARY 2025 A.D.

ILLINOIS PROFESSIONAL LAND SURVEYOR NO. 3425
LICENSE EXPIRATION DATE: 11-30-2026

KENNETH J. PESAVENTO 3425 PROFESSIONAL LAND SURVEYOR STATE OF ILLINOIS SHOREWOOD, ILLINOIS

THIS PROFESSIONAL SERVICE CONFORMS TO THE CURRENT ILLINOIS MINIMUM STANDARDS FOR A BOUNDARY SURVEY.

Ruettiger, Tonelli & Associates, Inc.
Surveyors• Engineers• Planners• Landscape Architects• GIS Consultants
125 CAPITOL DRIVE • SHOREWOOD, ILLINOIS 60404
PH (815) 744-4600 FAX (815) 741-0101
website: www.ruettigertonelli.com

RT. & A. Dwg. No.: 2020-0163.00

PLAT OF HIGHWAYS
STATE OF ILLINOIS
DEPARTMENT OF TRANSPORTATION
ILLINOIS ROUTE 47

LIMITS: IL 120 TO US 14 COUNTY: McHENRY
SECTION: JOB NO.: R-91-019-17
STA. 203+92.11 TO STA. 208+54.34
SCALE: 1"=30' SHEET 52 OF 57 SHEETS

BUREAU OF LAND ACQUISITION
201 WEST CENTER COURT
SCHAUMBURG, ILLINOIS 60196

IDOT USE ONLY

FOR REFERENCE ONLY - N.T.S.

MODEL: Default
FILE NAME: pw:\\aecom-na-pw.bentley.com:AECOM DS21_NA_2020\Documents\60632011-IL-47900-CAD191D_CAD03_SHEETS\General\D160X17-sht-PLAT.dgn

AECOM
303 EAST WACKER DRIVE, SUITE 1400
CHICAGO, IL 60601-5276
PHONE: (312) 373-7700 FAX: (312) 373-6800

USER NAME = muniza	DESIGNED -	REVISED -	
	DRAWN -	REVISED -	
PLOT SCALE = 100.0000 ' / in.	CHECKED -	REVISED -	
PLOT DATE = 2/7/2025	DATE -	REVISED -	

STATE OF ILLINOIS
DEPARTMENT OF TRANSPORTATION

SCALE: SHEET OF SHEETS STA. TO STA.

F.A.P. RTE.	SECTION	COUNTY	TOTAL SHEETS	SHEET NO.
326	2024-1052-N,C,SW,FL	MCHENRY	941	623
		CONTRACT NO. 62X94		
		ILLINOIS FED. AID PROJECT		

PART OF THE NE 1/4 & SE 1/4 OF SECTION 5 TWP.44N., R.7E. OF THE 3RD. P.M., IN McHENRY COUNTY, ILLINOIS.

PARCEL NUMBER	TOTAL HOLDINGS ACRES	PART TAKEN ACRES	AREA IN EXISTING R.O.W. ACRES	REMAINDER AREA ACRES	EASEMENT AREA ACRES	EASEMENT AREA SQUARE FEET	PARCEL INDEX NUMBER
1NU0119 1NU0119TE-A 1NU0119TE-B 1NU0119TE-C	4.127	0.230		3.897	TE-A=0.002 TE-B=0.049 TE-C=0.040	85 S.F. N/A N/A	13-05-254-013 13-05-254-011

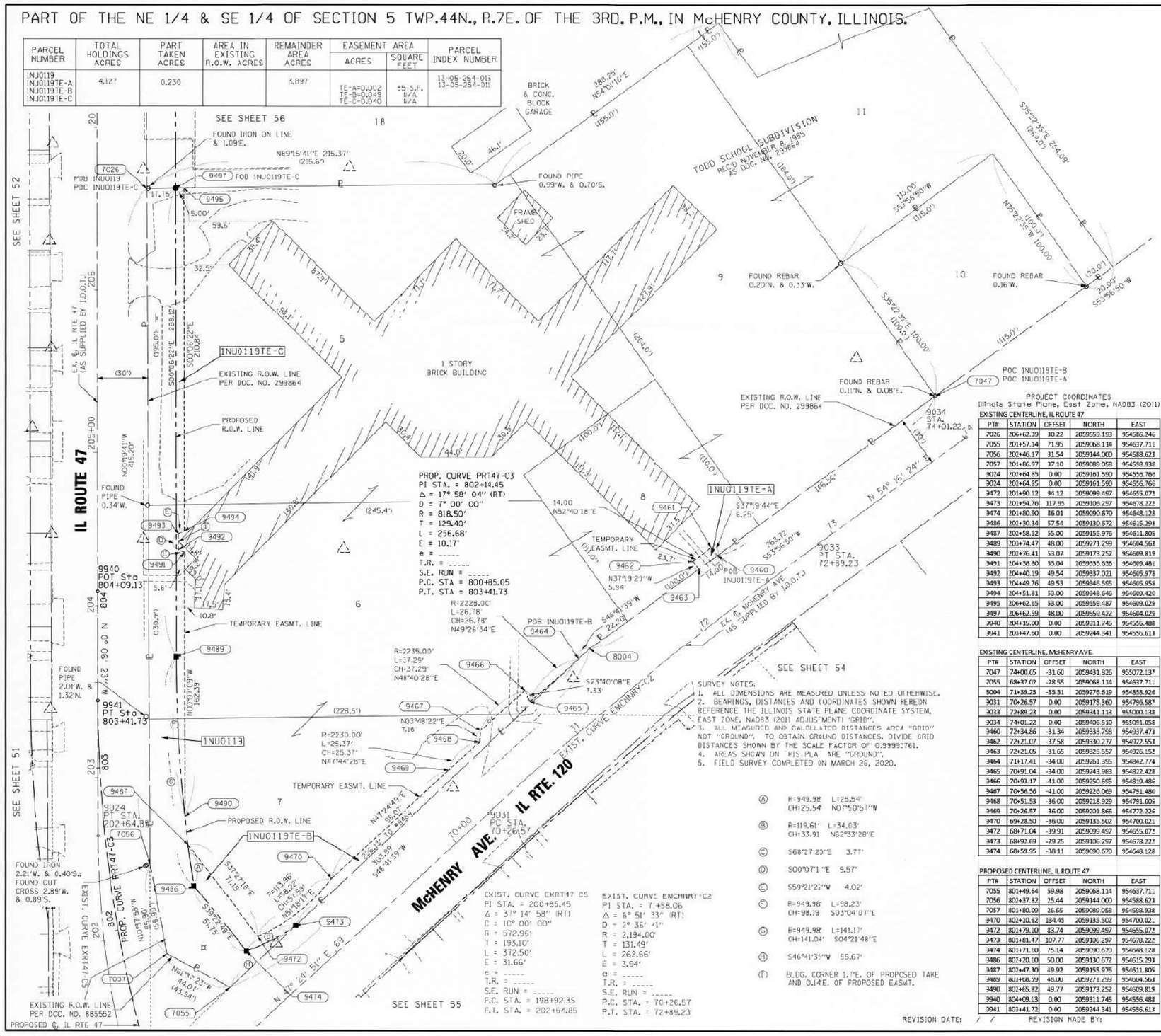
SEE SHEET 56
SEE SHEET 52
SEE SHEET 51
SEE SHEET 54
SEE SHEET 55
IL ROUTE 47
McHENRY AVE. IL RTE. 120
TODD SCHOOL SUBDIVISION
REC'D NOVEMBER 8, 1955
AS DOC. NO. 299864
1 STORY BRICK BUILDING
BRICK & CONC. BLOCK GARAGE
FRAME SHED
FOUND IRON ON LINE & 1.09'E.
FOUND PIPE 0.99'W. & 0.70'S.
FOUND REBAR 0.20'N. & 0.35'W.
FOUND REBAR 0.16'W.
FOUND REBAR 0.11'N. & 0.08'E.
FOUND PIPE 0.34'W.
FOUND PIPE 2.01'W. & 1.32'N.
FOUND IRON 2.21'W. & 0.40'S.
FOUND CUT CROSS 2.89'W. & 0.89'S.
EXISTING R.O.W. LINE PER DOC. NO. 299864
EXISTING R.O.W. LINE PER DOC. NO. 885552
PROPOSED R.O.W. LINE
PROPOSED ℄ IL RTE 47
TEMPORARY EASMT. LINE
EXIST. CURVE EMCHENRY-C2
EXIST. CURVE EXRT47-C5
PROP. CURVE PRT47-C3
PI STA. = 802+14.45
Δ = 17° 58' 04" (RT)
D = 7° 00' 00"
R = 818.50'
T = 129.40'
L = 256.68'
E = 10.17'
e = -----
T.R. = -----
S.E. RUN = -----
P.C. STA = 800+85.05
P.T. STA = 803+41.73
EXIST. CURVE EXRT47-C5
PI STA. = 200+85.45
Δ = 31° 14' 58" (RT)
D = 10° 00' 00"
R = 572.96'
T = 193.10'
L = 312.50'
E = 31.66'
e = -----
T.R. = -----
S.E. RUN = -----
P.C. STA. = 198+92.35
P.T. STA. = 202+64.85
EXIST. CURVE EMCHENRY-C2
PI STA. = 7+58.06
Δ = 6° 51' 33" (RT)
D = 2° 36' 41"
R = 2,194.00'
T = 131.49'
L = 262.66'
E = 3.54'
e = -----
T.R. = -----
S.E. RUN = -----
P.C. STA. = 70+26.57
P.T. STA. = 72+89.23
POB 1NU0119
POC 1NU0119TE-C
POB 1NU0119TE-C
POB 1NU0119TE-A
POC 1NU0119TE-B
POC 1NU0119TE-A
POB 1NU0119TE-B
1NU0119TE-C
1NU0119TE-A
1NU0113
9940 POT Sta 804+09.13
9941 PT Sta 803+41.73
9024 PT STA. 202+64.85
9033 PC STA. 70+26.57
9033 PT STA. 72+89.23
7026
9497
9495
9493
9494
9492
9491
9489
9487
9490
7056
9486
9473
9472
9474
7037
7055
9460
9461
9462
9463
9464
8004
9466
9467
9468
9469
9470
7047
9034 STA. 74+01.22
N 54° 16' 24" W
S37°19'44"E 6.25'
S 54° 16' 24" E
S35°27'35"E 264.09'
S53°56'50"W
N35°22'35"W 100.00'
S35°27'35"E 100.00'
N00°09'41"W 415.20'
S00°06'22"E 288.12'
S00°06'22"E 210.84'
N89°15'41"E 215.37'
N37°19'29"W 5.94'
S46°41'39"E 5.94'
S46°41'39"E 55.67'
N47°44'49"E 98.07'
N37°18'11"E 98.19'
S37°27'18"E 71.15'
N47°44'28"E 7.16'
N03°48'22"E 7.16'
S23°40'08"E 7.33'
N 7° 24' 51" E 69
N 7° 24' 51" E 63
N00°07'41"W 43.01'
N89°27'23"W 44.01'
S 7° 24' 51" W 63.72'
S 7° 24' 51" W 69.72'
S 7° 24' 51" W 69.72

PART OF THE SE 1/4 AND NE 1/4 OF SECTION 5 TWP.44N., R.7E. OF THE 3RD. P.M., IN McHENRY COUNTY, ILLINCIS.

PARCEL NUMBER	TOTAL HOLDINGS ACRES	PART TAKEN ACRES	AREA IN EXISTING R.O.W. ACRES	REMAINDER AREA ACRES	EASEMENT AREA ACRES	EASEMENT AREA SQUARE FEET	PARCEL INDEX NUMBER
1NU0116 1NU0116TE	0.495	0.002 77 S.F.		0.493	0.020	N/A	13-05-401-007 13-05-401-024
1NU0117 1NU0117TE	0.347	0.002 81 S.F.		0.345	0.019	N/A	13-05-401-027
1NU0118 1NU0118TE	5.656	0.009 406 S.F.		5.647	0.017	N/A	13-05-256-006 13-05-401-011 13-05-401-025 13-05-401-026

SURVEY NOTES:
1. ALL DIMENSIONS ARE MEASURED UNLESS NOTED OTHERWISE.
2. BEARINGS, DISTANCES AND COORDINATES SHOWN HEREON REFERENCE THE ILLINOIS STATE PLANE COORDINATE SYSTEM, EAST ZONE, NAD83 (2011 ADJUSTMENT) 'GRID'.
3. ALL MEASURED AND CALCULATED DISTANCES AREA "GRID" NOT "GROUND". TO OBTAIN GROUND DISTANCES, DIVIDE GRID DISTANCES SHOWN BY THE SCALE FACTOR OF 0.99993761.
4. AREAS SHOWN ON THIS PLAT ARE "GROUND".
5. FIELD SURVEY COMPLETED ON MARCH 26, 2020.

EXIST. CURVE EXRT47-C5
PI STA. = 200+85.45
Δ = 37° 14' 58" (RT)
D = 10° 00' 00"
R = 572.96'
T = 193.10'
L = 372.50'
E = 31.66'
e = -----
T.R. = -----
S.E. RUN = -----
P.C. STA. = 198+92.35
P.T. STA. = 202+64.85

PROP. CURVE PRT47-C2
PI STA. = 795+48.64
Δ = 19° 16' 53" (RT)
D = 7° 00' 00"
R = 818.50'
T = 139.24'
L = 275.45'
E = 11.73'
e = -----
T.R. = -----
S.E. RUN = -----
P.C. STA = 798+09.60
P.T. STA = 800+85.04

PROJECT COORDINATES
Illinois State Plane, East Zone, NAD83 (2011)
EXISTING CENTERLINE, McHENRY AVENUE

PT#	STATION	OFFSET	NORTH	EAST
229	72+47.65	28.54	2059293.671	954983.715
231	71+49.91	25.45	2059236.556	954905.839
7073	70+80.37	27.77	2059196.374	954854.927
7092	70+19.29	28.42	2059148.510	954810.462
7126	69+53.29	28.42	2059104.850	954761.867
9026	67+40.60	0.00	2058981.848	954546.040
9031	70+26.57	0.00	2059175.360	954796.587
9433	69+53.29	29.58	2059103.995	954762.653
9434	69+53.29	43.00	2059094.113	954771.733
9435	70+19.29	43.00	2059138.773	954830.323
9436	70+19.29	29.58	2059148.657	954811.246
9439	70+80.41	29.58	2059186.043	954856.151
9443	70+26.57	43.00	2059143.701	954815.585
9444	70+80.76	43.00	2059175.163	954865.239
9445	70+80.50	33.00	2059186.525	954858.467
9449	72+47.67	29.58	2059292.846	954984.356
9450	71+54.50	33.00	2059233.578	954941.124
9451	71+54.38	42.00	2059226.532	954959.725
9452	71+76.81	42.00	2059240.365	954936.833
9453	71+76.84	33.00	2059247.410	954911.233
9433	72+47.73	33.00	2059296.140	954968.436
9748	67+55.49	0.00	2058891.921	954586.999
9948	70+26.57	29.58	2059153.581	954816.604

LEGEND

SECTION CORNER
QUARTER SECTION CORNER
GRAPHIC SCALE FEET
SCALE: 1"=30'

- SECTION / QUARTER SECTION LINE
- PLATTED LOT LINES
- PROPERTY (DEED) LINE
- APPARENT PROPERTY LINE
- EXISTING CENTERLINE
- PROPOSED CENTERLINE
- EXISTING RIGHT OF WAY LINE
- PROPOSED RIGHT OF WAY LINE
- EXISTING EASEMENT
- PROPOSED EASEMENT
- EXISTING ACCESS CONTROL LINE
- PROPOSED ACCESS CONTROL LINE
- 129.32' MEASURED DIMENSION
- 129.32' (COMP) COMPUTED DIMENSION
- (129.32') RECORDED DIMENSION
- EXISTING BUILDING

BEARINGS ARE REFERENCED TO THE ILLINOIS STATE PLANE COORDINATE SYSTEM,NAD83 (2011 ADJUSTMENT),EAST ZONE.

- IRON PIPE OR ROD FOUND
- "MAG" NAIL SET
- + CUT CROSS FOUND OR SET
- 5/8" REBAR SET

STAKING OF PROPOSED RIGHT OF WAY. SET DIVISION OF HIGHWAYS SURVEY MARKER TO MONUMENT THE POSITION SHOWN. IDENTIFIED BY INSCRIPTION DATA AND SURVEYORS REGISTRATION NUMBER.

STAKING OF PROPOSED RIGHT OF WAY IN CULTIVATED AREAS. BURIED 5/8 INCH METAL ROD 20 INCHES BELOW GROUND TO MARK FUTURE SURVEY MARKER POSITION IDENTIFIED BY COLORED PLASTIC CAP BEARING SURVEYORS REGISTRATION NUMBER.

PERMANENT SURVEY MARKER, I.D.O.T. STANDARD 667101-02 (TO BE SET BY OTHERS)

RIGHT OF WAY STAKING PROPOSED TO BE SET

STATE OF ILLINOIS)
)SS
COUNTY OF WILL)

THIS IS TO CERTIFY THAT I, KENNETH J. PESAVENTO, AN ILLINOIS PROFESSIONAL LAND SURVEYOR, OF, RUETTIGER, TONELLI & ASSOCIATES, AN ILLINOIS PROFESSIONAL DESIGN FIRM LAND SURVEYING CORPORATION, NUMBER 184-001251.) HAVE SURVEYED THE PLAT OF HIGHWAYS SHOWN HEREON IN SECTION 5, TOWNSHIP 44 NORTH, RANGE 7 EAST OF THE THIRD PRINCIPAL MERIDIAN, McHENRY COUNTY, THAT THE SURVEY IS TRUE AND COMPLETE AS SHOWN TO THE BEST OF MY KNOWLEDGE AND BELIEF, THAT THE PLAT CORRECTLY REPRESENTS SAID SURVEY, THAT ALL MONUMENTS FOUND AND ESTABLISHED ARE OF PERMANENT QUALITY AND OCCUPY THE POSITIONS SHOWN THEREON AND THAT THE MONUMENTS ARE SUFFICIENT TO ENABLE THE SURVEY TO BE RETRACED, MADE FOR THE DEPARTMENT OF TRANSPORTATION, STATE OF ILLINOIS.

DATED AT SHOREWOOD, ILLINOIS THIS 28TH DAY OF JANUARY 2025 A.D.

ILLINOIS PROFESSIONAL LAND SURVEYOR NO. 3425
LICENSE EXPIRATION DATE: 11-30-2026

THIS PROFESSIONAL SERVICE CONFORMS TO THE CURRENT ILLINOIS MINIMUM STANDARDS FOR A BOUNDARY SURVEY.

KENNETH J. PESAVENTO 3425 PROFESSIONAL LAND SURVEYOR STATE OF ILLINOIS SHOREWOOD, ILLINOIS

Ruettiger, Tonelli & Associates, Inc.
Surveyors • Engineers • Planners • Landscape Architects • G.I.S. Consultants
129 CAPESTA DRIVE - SHOREWOOD, ILLINOIS 60404
PH. (815) 744-6600 FAX (815) 744-6101
website: www.ruettigertonelli.com

R.T. & A. Dwg. No.: 2020-0163.00

PLAT OF HIGHWAYS
STATE OF ILLINOIS
DEPARTMENT OF TRANSPORTATION
ILLINOIS ROUTE 47

LIMITS: IL 120 TO US 14 — COUNTY: McHENRY
SECTION: — JOB NO.: R-9-019-17
STA. 69+53.29 TO STA. 72+47.67
SCALE: 1"=30' — SHEET 54 OF 57 SHEETS

IDOT USE ONLY

BUREAU OF LAND ACQUISITION
201 WEST CENTER COURT
SCHAUMBURG, ILLINOIS 60196

REVISION DATE: / / REVISION MADE BY:

FOR REFERENCE ONLY - N.T.S.

AECOM 303 EAST WACKER DRIVE, SUITE 1400 CHICAGO, IL 60601-5276 PHONE: (312) 373-7700 FAX: (312) 373-6800	USER NAME = muniza	DESIGNED -	REVISED -	STATE OF ILLINOIS DEPARTMENT OF TRANSPORTATION		F.A.P. RTE.	SECTION	COUNTY	TOTAL SHEETS	SHEET NO.
		DRAWN -	REVISED -			326	2024-1052-N,C,SW,FL	MCHENRY	941	625
	PLOT SCALE = 100.0000 ' / in.	CHECKED -	REVISED -					CONTRACT NO. 62X94		
	PLOT DATE = 2/7/2025	DATE -	REVISED -		SCALE: SHEET OF SHEETS STA. TO STA.			ILLINOIS FED. AID PROJECT		

MODEL: Default
FILE NAME: pw:\\aecom-na-pw.bentley.com:AECOM_DS21_NA_2020\Documents\606320111-IL-47900-CAD\910_CAD\03_SHEETS\General\D160X17-sht-PLAT.dgn

PART OF THE SE 1/4 OF SECTION 5 TWP.44N., R.7E. OF THE 3RD. P.M., IN McHENRY COUNTY, ILLINOIS.

PARCEL NUMBER	TOTAL HOLDINGS ACRES	PART TAKEN ACRES	AREA IN EXISTING R.O.W. ACRES	REMAINDER AREA ACRES	EASEMENT AREA ACRES	EASEMENT AREA SQUARE FEET	PARCEL INDEX NUMBER
1NU0114 1NU0114TE	0.193	0.012		0.181	0.018	N/A	13-05-401-029
1NU0115 1NU0115TE	0.184	0.001 22 S.F.		0.183	0.021	N/A	13-05-401-033
1NU0133 1NU0133TE	0.149	0.082		0.067	0.031	N/A	13-05-401-031
1NU0134 1NU0134TE	0.163	0.010		0.153	0.013	N/A	13-05-401-004
1NU0135	0.193	0.000 17s.f.		0.193	0.00		13-05-401-005

SURVEY NOTES:
1. ALL DIMENSIONS ARE MEASURED UNLESS NOTED OTHERWISE.
2. BEARINGS, DISTANCES AND COORDINATES SHOWN HEREON REFERENCE THE ILLINOIS STATE PLANE COORDINATE SYSTEM, EAST ZONE, NAD83 (2011 ADJUSTMENT) "GRID".
3. ALL MEASURED AND CALCULATED DISTANCES ARE "GRID" NOT "GROUND". TO OBTAIN GROUND DISTANCES, DIVIDE GRID DISTANCES SHOWN BY THE SCALE FACTOR OF 0.99993761.
4. AREAS SHOWN ON THIS PLAT ARE "GROUND".
5. FIELD SURVEY COMPLETED ON MARCH 26, 2020.

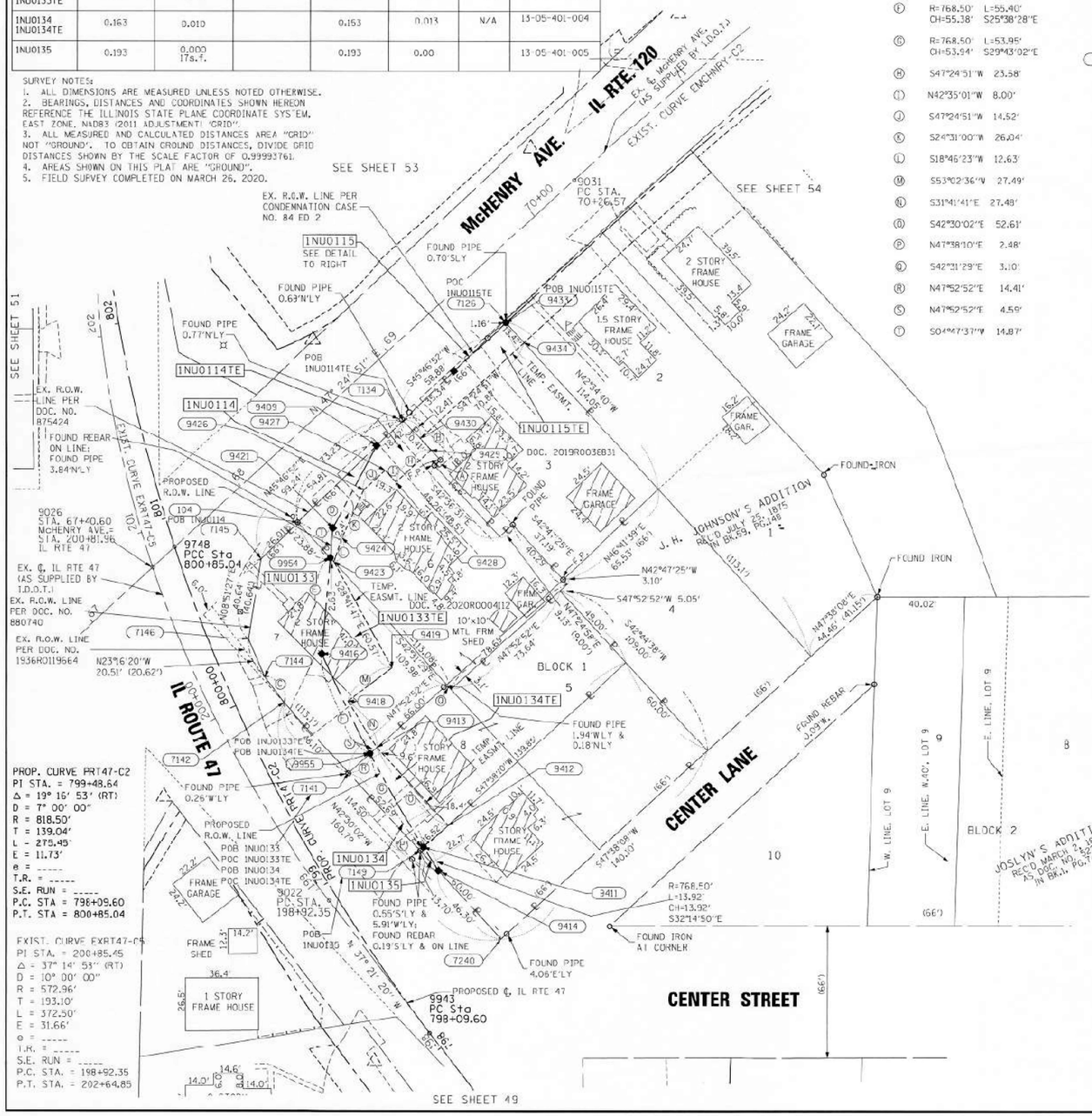

Ⓐ	S47°08'43"W	3.99' (4.00')
Ⓑ	S42°48'23"E	27.24'(28.00')
Ⓒ	N37°16'33"W	15.99'
Ⓓ	S28°05'55"W	46.49'
Ⓔ	S04°47'37"W	48.29'
Ⓕ	R=768.50' CH=55.38'	L=55.40' S25°38'28"E
Ⓖ	R=768.50' CH=53.94'	L=53.95' S29°43'02"E
Ⓗ	S47°24'51"W	23.58'
Ⓘ	N42°35'01"W	8.00'
Ⓙ	S47°24'51"W	14.52'
Ⓚ	S24°31'00"W	26.04'
Ⓛ	S18°46'23"W	12.63'
Ⓜ	S53°02'36"W	27.49'
Ⓝ	S31°41'41"E	27.48'
Ⓞ	S42°30'02"E	52.61'
Ⓟ	N47°38'10"E	2.48'
Ⓠ	S42°31'29"E	3.10'
Ⓡ	N47°52'52"E	14.41'
Ⓢ	N47°52'52"E	4.59'
Ⓣ	S04°47'37"W	14.87'

DETAIL OF PARCEL 1NU0115
NOT TO SCALE

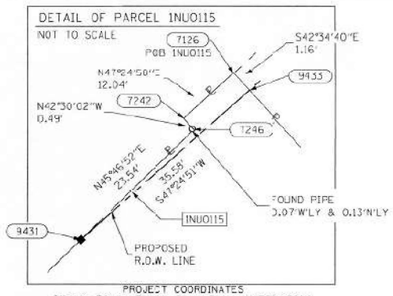

PROJECT COORDINATES
Illinois State Plane, East Zone, NAD83 (2011)

EXISTING CENTERLINE, IL ROUTE 47

PTR	STATION	CFFSET	NORTH	EAST
7142	199+91.50	34.15	2058914.350	954651.537
7144	200+08.16	31.19	2058927.070	954644.856
7145	200+67.62	52.38	2058986.067	954644.030
7146	200+29.85	31.70	2058945.911	954633.753
7240	198+24.58	56.62	2058795.802	954766.168
9027	198+92.35	0.00	2058815.002	954671.288
9026	200+81.96	0.00	2058981.848	954588.040
9409	201+33.32	124.74	2059042.419	954691.930
9411	198+94.35	53.70	2058841.708	954721.463
9412	198+86.40	70.16	2058852.842	954731.671
9413	199+44.64	53.32	2058891.630	954691.127
9414	198+71.09	52.46	2058829.936	954721.880
9416	200+05.59	52.17	2058938.483	954676.758
9418	199+75.51	52.79	2058915.008	954688.662
9419	199+80.00	90.00	2058931.513	954701.656
9421	200+70.27	91.47	2059001.422	954674.036
9423	200+51.59	86.19	2058984.785	954671.630
9424	200+63.02	94.16	2058996.624	954688.634
9426	200+85.09	132.14	2059020.316	954691.440
9748	200+88.21	133.54	2059091.921	954698.999
9943	198+09.60	0.00	2058748.225	954724.498

PROPOSED CENTERLINE, IL ROUTE 47

PTR	STATION	CFFSET	NORTH	EAST
104	800+76.98	52.38	2059004.206	954654.651
7141	799+43.69	36.03	2058878.887	954689.034
7142	799+91.60	22.50	2058914.350	954651.537
7134	801+14.46	127.71	2059055.276	954711.133
7144	800+07.57	18.94	2058927.070	954644.856
7145	800+69.19	38.84	2058988.067	954648.030
7146	800+28.56	18.76	2058945.911	954633.753
7149	798+89.50	47.56	2058840.039	954719.633
7240	798+26.12	56.66	2058795.802	954766.168
9022	796+92.07	4.17	2058815.002	954671.288
9026	800+78.57	13.57	2058981.848	954588.040
9409	801+04.38	111.42	2059042.419	954691.930
9411	798+89.98	50.00	2058841.708	954721.463
9412	798+91.30	56.23	2058852.842	954731.671
9413	799+48.67	54.44	2058891.630	954691.127
9414	798+73.10	50.00	2058829.936	954721.880
9416	800+06.44	50.00	2058938.483	954676.758
9418	799+77.94	52.00	2058915.008	954688.662
9419	799+83.94	78.93	2058931.513	954701.656
9421	800+67.93	77.93	2059001.422	954674.036
9423	800+50.48	72.80	2058984.785	954671.630
9424	800+61.22	80.65	2058996.624	954688.634
9426	800+82.42	38.59	2059020.316	954691.440
9748	800+85.04	0.00	2058991.921	954698.999
9943	798+09.60	0.00	2058748.225	954724.498
9954	800+53.04	71.74	2058986.605	954677.793
9955	799+47.44	50.00	2058888.553	954691.724

EXISTING CENTERLINE, McHENRY AVENUE

PTR	STATION	CFFSET	NORTH	EAST
104	68+06.19	82.67	2059004.206	954653.651
7129	69+53.29	28.42	2059104.850	954716.867
7134	68+82.39	30.59	2059055.276	954711.133
7142	67+43.15	34.02	2058914.350	954651.537
7144	67+44.63	18.10	2058927.070	954644.856
7145	67+83.19	33.42	2058986.067	954644.030
7146	67+51.41	38.75	2058945.911	954633.753
7242	69+41.25	28.42	2059096.700	954715.999
7246	69+41.25	28.91	2059096.339	954715.330
9025	67+40.60	0.00	2058881.848	954588.040
9031	70+26.57	0.00	2059175.360	954798.587
9409	68+63.98	31.11	2059042.429	954691.930
9411	67+73.63	39.26	2058938.483	954671.758
9413	67+67.27	115.29	2058915.008	954688.662
9419	67+94.62	117.99	2058931.513	954701.656
9421	68+20.11	86.49	2059001.422	954671.036
9423	68+06.27	59.13	2058984.785	954671.630
9424	68+20.25	53.13	2059096.624	954688.634
9426	68+44.24	83.00	2059020.316	954691.440
9427	68+58.75	83.00	2059030.140	954701.128
9428	68+58.75	51.00	2059024.250	954701.541
9429	68+82.44	51.00	2059040.276	954721.978
9430	68+82.42	83.00	2059046.154	954711.552
9431	69+17.71	19.58	2059079.920	954730.458
9433	69+53.29	19.58	2059103.995	954716.653
9434	69+53.29	83.00	2059094.113	954777.723
9748	69+88.68	0.00	2058991.921	954698.999
9954	68+06.17	56.56	2058986.605	954677.793
9955	67+57.49	342.24	2058888.553	954691.724

LEGEND

SECTION CORNER
QUARTER SECTION CORNER
SECTION / QUARTER SECTION LINE
PLATTED LOT LINES
P PROPERTY (DEED) LINE
APL APPARENT PROPERTY LINE
EXISTING CENTERLINE
PROPOSED CENTERLINE
EXISTING RIGHT OF WAY LINE
PROPOSED RIGHT OF WAY LINE
EXISTING EASEMENT
PROPOSED EASEMENT
AC EXISTING ACCESS CONTROL LINE
AC PROPOSED ACCESS CONTROL LINE
129.32' MEASURED DIMENSION
129.32' (COMP) COMPUTED DIMENSION
(129.32') RECORDED DIMENSION
EXISTING BUILDING

N
GRAPHIC SCALE FEET
0 30
SCALE: 1"=30'

BEARINGS ARE REFERENCED TO THE ILLINOIS STATE PLANE COORDINATE SYSTEM, NAD83 (2011 ADJUSTMENT), EAST ZONE.

- IRON PIPE OR ROD FOUND
- ⊕ "MAG" NAIL SET
- \+ CUT CROSS FOUND OR SET
- ● 5/8" REBAR SET
- ■ STAKING OF PROPOSED RIGHT OF WAY. SET DIVISION OF HIGHWAYS SURVEY MARKER TO MONUMENT THE POSITION SHOWN. IDENTIFIED BY INSCRIPTION DATA AND SURVEYORS REGISTRATION NUMBER.
- ■ M STAKING OF PROPOSED RIGHT OF WAY IN CULTIVATED AREAS. BURIED 5/8 INCH METAL ROD 20 INCHES BELOW GROUND TO MARK FUTURE SURVEY MARKER POSITION IDENTIFIED BY COLORED PLASTIC CAP BEARING SURVEYORS REGISTRATION NUMBER.
- PERMANENT SURVEY MARKER, I.D.O.T. STANDARD 667101-02 (TO BE SET BY OTHERS)
- □ RIGHT OF WAY STAKING PROPOSED TO BE SET
- F.P. FOUND PIPE AT CORNER

STATE OF ILLINOIS)
) SS
COUNTY OF WILL)

THIS IS TO CERTIFY THAT I, KENNETH J. PESAVENTO, AN ILLINOIS PROFESSIONAL LAND SURVEYOR, (WE, RUETTIGER, TONELLI & ASSOCIATES, AN ILLINOIS PROFESSIONAL DESIGN FIRM LAND SURVEYING CORPORATION, NUMBER 184-001251,) HAVE SURVEYED THE PLAT OF HIGHWAYS SHOWN HEREON IN SECTION 5, TOWNSHIP 44 NORTH, RANGE 7 EAST OF THE THIRD PRINCIPAL MERIDIAN, McHENRY COUNTY, THAT THE SURVEY IS TRUE AND COMPLETE AS SHOWN TO THE BEST OF MY KNOWLEDGE AND BELIEF, THAT THE PLAT CORRECTLY REPRESENTS SAID SURVEY, THAT ALL MONUMENTS FOUND AND ESTABLISHED ARE OF PERMANENT QUALITY AND OCCUPY THE POSITIONS SHOWN THEREON AND THAT THE MONUMENTS ARE SUFFICIENT TO ENABLE THE SURVEY TO BE RETRACED, MADE FOR THE DEPARTMENT OF TRANSPORTATION, STATE OF ILLINOIS.

DATED AT SHOREWOOD, ILLINOIS THIS 28TH DAY OF JANUARY 2025 A.D.

ILLINOIS PROFESSIONAL LAND SURVEYOR NO. 3425
LICENSE EXPIRATION DATE: 11-30-2026

KENNETH J. PESAVENTO 3425 PROFESSIONAL LAND SURVEYOR STATE OF ILLINOIS SHOREWOOD, ILLINOIS

THIS PROFESSIONAL SERVICE CONFORMS TO THE CURRENT ILLINOIS MINIMUM STANDARDS FOR A BOUNDARY SURVEY.

Ruettiger, Tonelli & Associates, Inc.
Surveyors • Engineers • Planners • Landscape Architects • GIS Consultants
129 CAPISTRANO – SHOREWOOD, ILLINOIS 60404
PH. (815) 744-6000 FAX (815) 744-6181
website: www.rttengineers.com

R.T. & A. Dwg. No.: 2020-0163.00

PLAT OF HIGHWAYS
STATE OF ILLINOIS
DEPARTMENT OF TRANSPORTATION
ILLINOIS ROUTE 47

LIMITS: IL 120 TO US 14 — COUNTY: McHENRY
SECTION: — JOB NO.: R-91-019-17
STA. 798+7516 TO STA. 800+85.04
SCALE: 1"=30' — SHEET 55 OF 57 SHEETS

BUREAU OF LAND ACQUISITION
201 WEST CENTER COURT
SCHAUMBURG, ILLINOIS 60196

IDOT USE ONLY

REVISION DATE: / / REVISION MADE BY:

FOR REFERENCE ONLY - N.T.S.

MODEL: Default
FILE NAME: pw:\\aecom-na-pw.bentley.com:AECOM_0521 - NA_2020\Documents\60632011-IL-47900-CAD\910_CAD\03_SHEETS\General\D160X17-sht-PLAT.dgn

AECOM
303 EAST WACKER DRIVE, SUITE 1400
CHICAGO, IL 60601-5276
PHONE: (312) 373-7700 FAX: (312) 373-6800

USER NAME = muniza	DESIGNED -	REVISED -	
	DRAWN -	REVISED -	
PLOT SCALE = 100.0000 ' / in.	CHECKED -	REVISED -	
PLOT DATE = 2/7/2025	DATE -	REVISED -	

STATE OF ILLINOIS
DEPARTMENT OF TRANSPORTATION

SCALE: SHEET OF SHEETS STA. TO STA.

F.A.P. RTE.	SECTION	COUNTY	TOTAL SHEETS	SHEET NO.
326	2024-1052-N,C,SW,FL	MCHENRY	941	626
		CONTRACT NO. 62X94		
	ILLINOIS FED. AID PROJECT			

PART OF THE NE/4 OF SECTION 5 TWP.44N., R.7E. OF THE 3RD. P.M., IN McHENRY COUNTY, ILLINOIS.

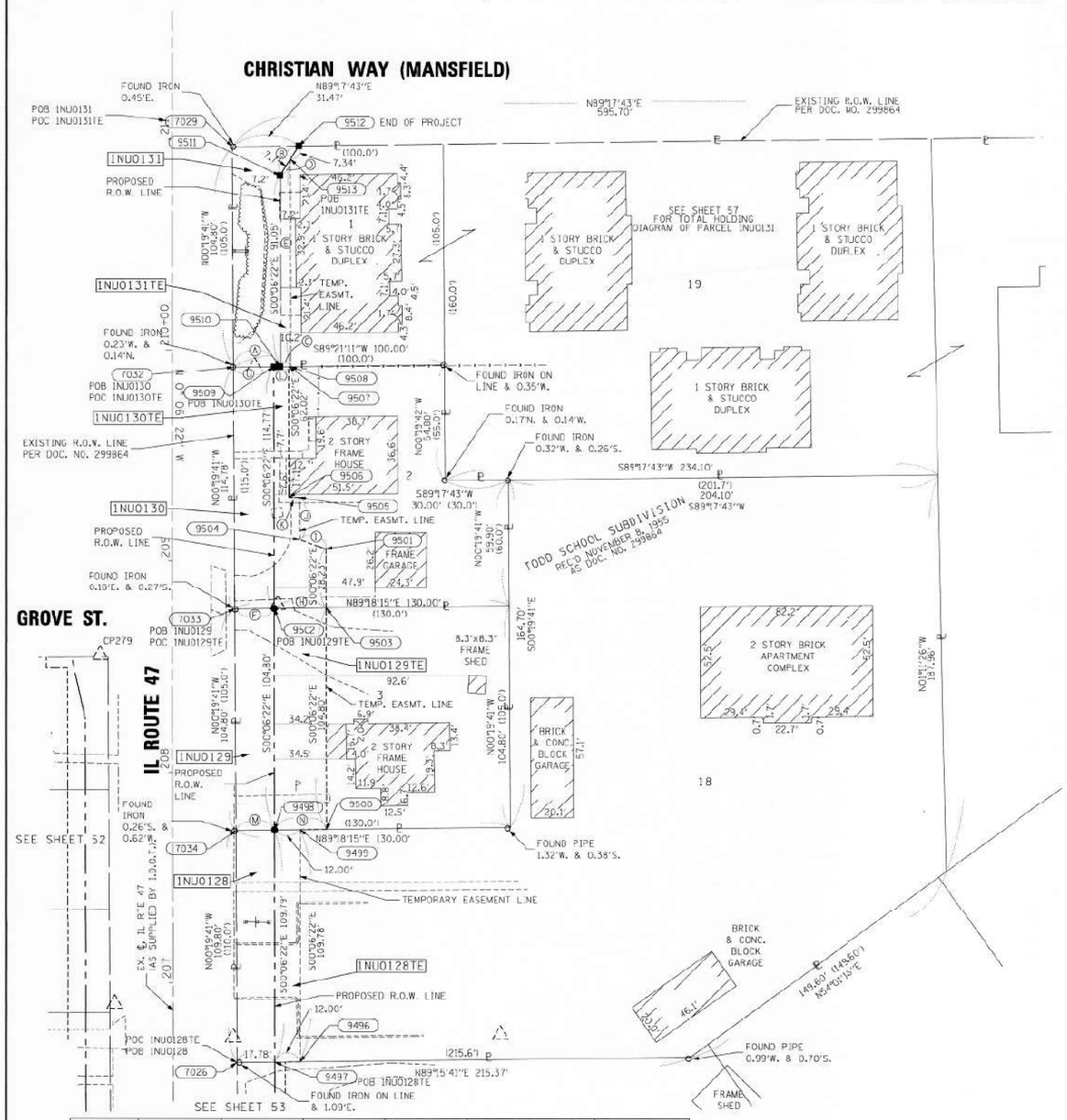

Ⓐ	N89°21'11"E	22.06'
Ⓑ	S32°52'35"W	16.53'
Ⓒ	S89°21'11"W	5.00'
Ⓓ	N32°52'35"E	9.19'
Ⓔ	S00°06'22"E	98.71'
Ⓕ	S89°18'15"W	18.62'
Ⓖ	S89°21'11"W	19.06'
Ⓗ	N89°18'15"E	25.00'
Ⓘ	S71°40'20"E	13.70'
Ⓙ	S00°06'22"E	20.00'
Ⓚ	N89°53'49"E	5.00'
Ⓛ	N89°21'11"E	7.00'
Ⓜ	S89°18'15"W	18.21'
Ⓝ	S89°18'15"W	25.00'

PROJECT COORDINATES
Illinois State Plane, East Zone, NAD83 (2011)

PT#	STATION	OFFSET	NORTH	EAST
279	208+51.30	-34.28	2059751.980	954521.390
7026	206+62.39	30.22	2059559.193	954586.246
7029	210+96.57	28.54	2059993.366	954583.761
7032	209+91.77	28.94	2059888.568	954584.361
7033	208+71.96	29.39	2059771.790	954585.018
7034	207+72.15	29.79	2059668.991	954585.618
9496	206+62.72	60.00	2059559.577	954616.029
9497	206+62.59	48.00	2059559.422	954604.029
9498	207+72.38	48.00	2059669.212	954603.826
9499	207+72.50	60.00	2059669.358	954615.825
9500	207+72.64	73.00	2059669.516	954628.825
9501	209+02.67	73.00	2059802.546	954628.578
9502	208+71.18	48.00	2059774.016	954603.631
9503	208+71.44	73.00	2059774.310	954628.631
9504	209+10.00	60.00	2059806.855	954615.570
9505	209+30.00	60.00	2059826.855	954615.533
9506	209+30.00	55.00	2059826.846	954610.533
9507	209+92.02	55.00	2059888.862	954610.418
9508	209+92.03	56.00	2059888.873	954611.419
9509	209+91.95	48.00	2059888.783	954603.419
9510	209+91.98	51.00	2059888.817	954606.419
9511	210+82.03	51.00	2059979.868	954606.250
9512	210+96.98	60.00	2059993.753	954615.224
9513	210+96.74	56.00	2059987.582	954611.236

LEGEND

SECTION CORNER
QUARTER SECTION CORNER

- SECTION / QUARTER SECTION LINE
- PLATTED LOT LINES
- PROPERTY (DEED) LINE
- APPARENT PROPERTY LINE
- EXISTING CENTERLINE
- PROPOSED CENTERLINE
- EXISTING RIGHT OF WAY LINE
- PROPOSED RIGHT OF WAY LINE
- EXISTING EASEMENT
- PROPOSED EASEMENT
- EXISTING ACCESS CONTROL LINE
- PROPOSED ACCESS CONTROL LINE
- 129.22' MEASURED DIMENSION
- 129.32' (COMP) COMPUTED DIMENSION
- (129.22') RECORDED DIMENSION
- EXISTING BUILDING

N

GRAPHIC SCALE
FEET
SCALE: 1"=30'

BEARINGS ARE REFERENCED TO THE ILLINOIS STATE PLANE COORDINATE SYSTEM,NAD83 (2011 ADJUSTMENT),EAST ZONE.

- ○ IRON PIPE OR ROD FOUND
- ⊕ "MAG" NAIL SET
- \+ CUT CROSS FOUND OR SET
- ● 5 / 8"REBAR SET
- ■ STAKING OF PROPOSED RIGHT OF WAY. SET DIVISION OF HIGHWAYS SURVEY MARKER TO MONUMENT THE POSITION SHOWN. IDENTIFIED BY INSCRIPTION DATA AND SURVEYORS REGISTRATION NUMBER.
- ■ M STAKING OF PROPOSED RIGHT OF WAY IN CULTIVATED AREAS. BURIED 5/8 INCH METAL ROD 20 INCHES BELOW GROUND TO MARK FUTURE SURVEY MARKER POSITION IDENTIFIED BY COLORED PLASTIC CAP BEARING SURVEYORS REGISTRATION NUMBER.
- ◔ PERMANENT SURVEY MARKER, I.D.O.T. STANDARD 667101-02 (TO BE SET BY OTHERS)
- □ RIGHT OF WAY STAKING PROPOSED TO BE SET

PARCEL NUMBER	TOTAL HOLDINGS ACRES	PART TAKEN ACRES	AREA IN EXISTING R.O.W. ACRES	REMAINDER AREA ACRES	EASEMENT AREA ACRES	EASEMENT AREA SQUARE FEET	PARCEL INDEX NUMBER
1NU0128 1NU0128TE	1.504	0.045		1.459	0.030		13-05-254-005
1NU0129 1NU0129TE	0.313	0.044		0.269	0.060		13-05-254-003
1NU0130 1NU0130TE	0.305	0.050		0.255	0.034		13-05-254-002
1NU0131 1NU0131TE	3.010	0.055		2.955	0.011		13-05-254-001 13-05-254-004 13-05-254-006 13-05-254-007 13-05-254-008 13-05-254-009

SURVEY NOTES:
1. ALL DIMENSIONS ARE MEASURED UNLESS NOTED OTHERWISE.
2. BEARINGS, DISTANCES AND COORDINATES SHOWN HEREON REFERENCE THE ILLINOIS STATE PLANE COORDINATE SYSTEM, EAST ZONE, NAD83 (2011 ADJUSTMENT) "GRID".
3. ALL MEASURED AND CALCULATED DISTANCES ARE "GRID" NOT "GROUND". TO OBTAIN GROUND DISTANCES, DIVIDE GRID DISTANCES SHOWN BY THE SCALE FACTOR OF 0.99993761.
4. AREAS SHOWN ON THIS PLAT ARE "GROUND".
5. FIELD SURVEY COMPLETED ON MARCH 26, 2020.

REVISION DATE: / / REVISION MADE BY:

STATE OF ILLINOIS)
)SS
COUNTY OF WILL)

THIS IS TO CERTIFY THAT I, KENNETH J. PESAVENTO, AN ILLINOIS PROFESSIONAL LAND SURVEYOR, (WE, RUETTIGER, TONELLI & ASSOCIATES, AN ILLINOIS PROFESSIONAL DESIGN FIRM LAND SURVEYING CORPORATION, NUMBER 184-001251,) HAVE SURVEYED THE PLAT OF HIGHWAYS SHOWN HEREON IN SECTION 5, TOWNSHIP 44 NORTH, RANGE 7 EAST OF THE THIRD PRINCIPAL MERIDIAN, McHENRY COUNTY, THAT THE SURVEY IS TRUE AND COMPLETE AS SHOWN TO THE BEST OF MY KNOWLEDGE AND BELIEF, THAT THE PLAT CORRECTLY REPRESENTS SAID SURVEY, THAT ALL MONUMENTS FOUND AND ESTABLISHED ARE OF PERMANENT QUALITY AND OCCUPY THE POSITIONS SHOWN THEREON AND THAT THE MONUMENTS ARE SUFFICIENT TO ENABLE THE SURVEY TO BE RETRACED, MADE FOR THE DEPARTMENT OF TRANSPORTATION, STATE OF ILLINOIS.

DATED AT SHOREWOOD, ILLINOIS THIS 28TH DAY OF JANUARY 2025 A.D.

ILLINOIS PROFESSIONAL LAND SURVEYOR NO. 3425
LICENSE EXPIRATION DATE: 11-30-2026

KENNETH J. PESAVENTO 3425 PROFESSIONAL LAND SURVEYOR STATE OF ILLINOIS SHOREWOOD, ILLINOIS

THIS PROFESSIONAL SERVICE CONFORMS TO THE CURRENT ILLINOIS MINIMUM STANDARDS FOR A BOUNDARY SURVEY.

Ruettiger, Tonelli & Associates, Inc.
Surveyors • Engineers • Planners • Landscape Architects • G.I.S. consultants
129 CAPISTA DRIVE - SHOREWOOD, ILLINOIS 60404
PH. (815) 744-6600 FAX (815) 744-6102
website: www.ruettigertonelli.com

R.T. & A. Dwg. No.: 2020-0163.00

PLAT OF HIGHWAYS

STATE OF ILLINOIS
DEPARTMENT OF TRANSPORTATION
ILLINOIS ROUTE 47

LIMITS: IL 120 TO US 14 — COUNTY: McHENRY
SECTION: — JOB NO.: R-9-019-17
STA. 206+62.39 TO STA. 210+96.90
SCALE: 1"=30' — SHEET 56 OF 67 SHEETS

IDOT USE ONLY

BUREAU OF LAND ACQUISITION
201 WEST CENTER COURT
SCHAUMBURG, ILLINOIS 60196

FOR REFERENCE ONLY - N.T.S.

AECOM
303 EAST WACKER DRIVE, SUITE 1400
CHICAGO, IL 60601-5276
PHONE: (312) 373-7700 FAX: (312) 373-6800

USER NAME = muniza	DESIGNED -	REVISED -	
	DRAWN -	REVISED -	
PLOT SCALE = 100.0000 ' / in.	CHECKED -	REVISED -	
PLOT DATE = 2/7/2025	DATE -	REVISED -	

STATE OF ILLINOIS
DEPARTMENT OF TRANSPORTATION

SCALE: | SHEET OF SHEETS | STA. TO STA.

F.A.P. RTE.	SECTION	COUNTY	TOTAL SHEETS	SHEET NO.
326	2024-1052-N,C,SW,FL	MCHENRY	941	627
		CONTRACT NO. 62X94		
		ILLINOIS FED. AID PROJECT		

MODEL: Default
FILE NAME: pw:\\aecom-na-pw.bentley.com:AECOM_0521_NA_2020\Documents\60632011-IL-47900-CAD910_CAD\03_SHEETS\General\D160X17-sht-PLAT.dgn

PART OF THE NE 1/4 & SE 1/4 OF SECTION 5 TWP.44N., R.7E. OF THE 3RD. P.M., IN McHENRY COUNTY, ILLINOIS.

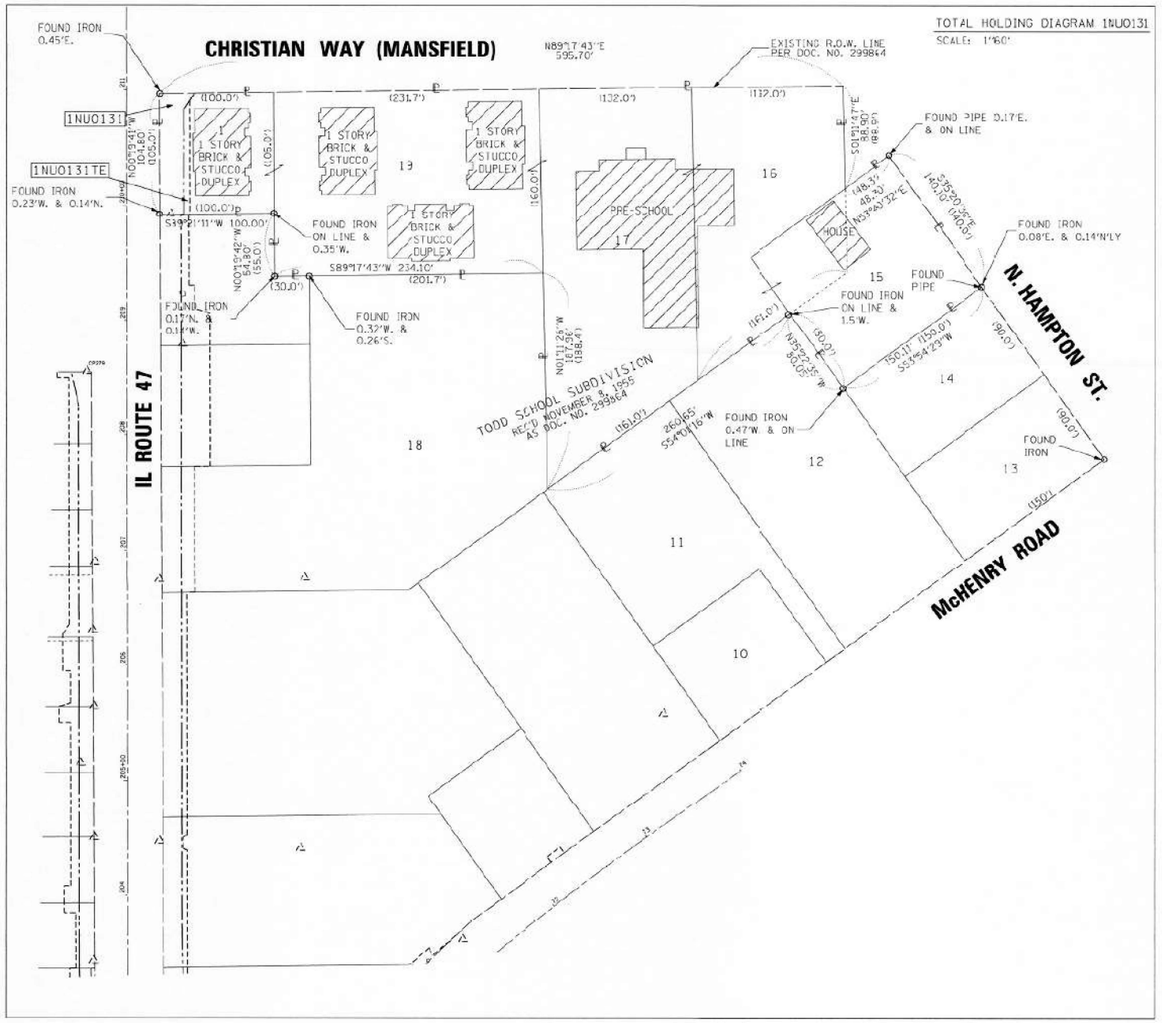

PARCEL NUMBER	TOTAL HOLDINGS ACRES	PART TAKEN ACRES	AREA IN EXISTING R.O.W. ACRES	REMAINDER AREA ACRES	EASEMENT AREA ACRES	EASEMENT AREA SQUARE FEET	PARCEL INDEX NUMBER
1NUO131 1NUO131TE	3.010	0.055		2.955	0.011		13-05-254-001 13-05-254-004 13-05-254-006 13-05-254-007 13-05-254-008 13-05-254-009

SURVEY NOTES:
1. ALL DIMENSIONS ARE MEASURED UNLESS NOTED OTHERWISE.
2. BEARINGS, DISTANCES AND COORDINATES SHOWN HEREON REFERENCE THE ILLINOIS STATE PLANE COORDINATE SYSTEM, EAST ZONE, NAD83 (2011 ADJUSTMENT) "GRID".
3. ALL MEASURED AND CALCULATED DISTANCES AREA "GRID" NOT "GROUND". TO OBTAIN GROUND DISTANCES, DIVIDE GRID DISTANCES SHOWN BY THE SCALE FACTOR OF 0.99993761.
4. AREAS SHOWN ON THIS PLAT ARE "GROUND".
5. FIELD SURVEY COMPLETED ON MARCH 26, 2020.

REVISION MADE BY:

LEGEND

SECTION CORNER — QUARTER SECTION CORNER

GRAPHIC SCALE FEET
SCALE: 1"=30'

- SECTION / QUARTER SECTION LINE
- PLATTED LOT LINES
- PROPERTY (DEED) LINE
- APL — APPARENT PROPERTY LINE
- EXISTING CENTERLINE
- PROPOSED CENTERLINE
- EXISTING RIGHT OF WAY LINE
- PROPOSED RIGHT OF WAY LINE
- EXISTING EASEMENT
- PROPOSED EASEMENT
- AC — EXISTING ACCESS CONTROL LINE
- AC — PROPOSED ACCESS CONTROL LINE
- 129.32' — MEASURED DIMENSION
- 129.32' (COMP) — COMPUTED DIMENSION
- (129.32') — RECORDED DIMENSION
- EXISTING BUILDING

BEARINGS ARE REFERENCED TO THE ILLINOIS STATE PLANE COORDINATE SYSTEM, NAD83 (2011 ADJUSTMENT), EAST ZONE.

- ○ IRON PIPE OR ROD FOUND
- ⊕ "MAG" NAIL SET
- \+ CUT CROSS FOUND OR SET
- ● 5/8" REBAR SET
- ■ STAKING OF PROPOSED RIGHT OF WAY. SET DIVISION OF HIGHWAYS SURVEY MARKER TO MONUMENT THE POSITION SHOWN. IDENTIFIED BY INSCRIPTION DATA AND SURVEYORS REGISTRATION NUMBER.
- ■ M STAKING OF PROPOSED RIGHT OF WAY IN CULTIVATED AREAS. BURIED 5/8 INCH METAL ROD 20 INCHES BELOW GROUND TO MARK FUTURE SURVEY MARKER POSITION IDENTIFIED BY COLORED PLASTIC CAP BEARING SURVEYORS REGISTRATION NUMBER.
- PERMANENT SURVEY MARKER, I.D.O.T. STANDARD 606101-02 (TO BE SET BY OTHERS)
- □ RIGHT OF WAY STAKING PROPOSED TO BE SET

STATE OF ILLINOIS)
) SS
COUNTY OF WILL)

THIS IS TO CERTIFY THAT I, KENNETH J. PESAVENTO, AN ILLINOIS PROFESSIONAL LAND SURVEYOR, (WE, RUETTIGER, TONELLI & ASSOCIATES, AN ILLINOIS PROFESSIONAL DESIGN FIRM LAND SURVEYING CORPORATION, NUMBER 184-001251,) HAVE SURVEYED THE PLAT OF HIGHWAYS SHOWN HEREON IN SECTION 5, TOWNSHIP 44 NORTH, RANGE 7 EAST OF THE THIRD PRINCIPAL MERIDIAN, McHENRY COUNTY, THAT THE SURVEY IS TRUE AND COMPLETE AS SHOWN TO THE BEST OF MY KNOWLEDGE AND BELIEF, THAT THE PLAT CORRECTLY REPRESENTS SAID SURVEY, THAT ALL MONUMENTS FOUND AND ESTABLISHED ARE OF PERMANENT QUALITY AND OCCUPY THE POSITIONS SHOWN THEREON AND THAT THE MONUMENTS ARE SUFFICIENT TO ENABLE THE SURVEY TO BE RETRACED, MADE FOR THE DEPARTMENT OF TRANSPORTATION, STATE OF ILLINOIS.

DATED AT SHOREWOOD, ILLINOIS THIS 28TH DAY OF JANUARY 2025 A.D.

ILLINOIS PROFESSIONAL LAND SURVEYOR NO. 3425
LICENSE EXPIRATION DATE: 11-30-2026

KENNETH J. PESAVENTO 3425 PROFESSIONAL LAND SURVEYOR STATE OF ILLINOIS SHOREWOOD, ILLINOIS

THIS PROFESSIONAL SERVICE CONFORMS TO THE CURRENT ILLINOIS MINIMUM STANDARDS FOR A BOUNDARY SURVEY.

Ruettiger, Tonelli & Associates, Inc.
Surveyors • Engineers • Planners • Landscape Architects • GIS Consultants
129 CAPISTA DRIVE - SHOREWOOD, ILLINOIS 60404
PH. (815) 744-5600 FAX (815) 744-0101
website: www.ruettigertonelli.com

R.T. & A. Dwg. No.: 2020-0163.00

PLAT OF HIGHWAYS
STATE OF ILLINOIS
DEPARTMENT OF TRANSPORTATION
ILLINOIS ROUTE 47

LIMITS: IL 120 TO US 14 — COUNTY: McHENRY
SECTION: — JOB NO.: R-91-019-17
STA. 209+00 TO STA. 211+00
SCALE: N/A — SHEET 57 OF 57 SHEETS

IDOT USE ONLY

BUREAU OF LAND ACQUISITION
201 WEST CENTER COURT
SCHAUMBURG, ILLINOIS 60196

FOR REFERENCE ONLY - N.T.S.

AECOM
303 EAST WACKER DRIVE, SUITE 1400
CHICAGO, IL 60601-5276
PHONE: (312) 373-7700 FAX: (312) 373-6800

USER NAME = muniza	DESIGNED -	REVISED -	
	DRAWN -	REVISED -	
PLOT SCALE = 100.0000 ' / in.	CHECKED -	REVISED -	
PLOT DATE = 2/7/2025	DATE -	REVISED -	

STATE OF ILLINOIS
DEPARTMENT OF TRANSPORTATION

SCALE: | SHEET OF SHEETS | STA. TO STA.

F.A.P. RTE.	SECTION	COUNTY	TOTAL SHEETS	SHEET NO.
326	2024-1052-N,C,SW,FL	McHENRY	941	628
		CONTRACT NO. 62X94		
	ILLINOIS FED. AID PROJECT			

MODEL: Default
FILE NAME: pw:\\aecom-na-pw.bentley.com:AECOM_DS21_NA_2020\Documents\60632011-IL-47900-CAD\910_CAD\03_SHEETS\General\D160X17-sht-PLAT.dgn

PART OF THE SW 1/4 OF SECTION 9, IN TWP. 44 N., R. 7 E. OF THE 3RD. P.M., IN McHENRY COUNTY, ILLINOIS.

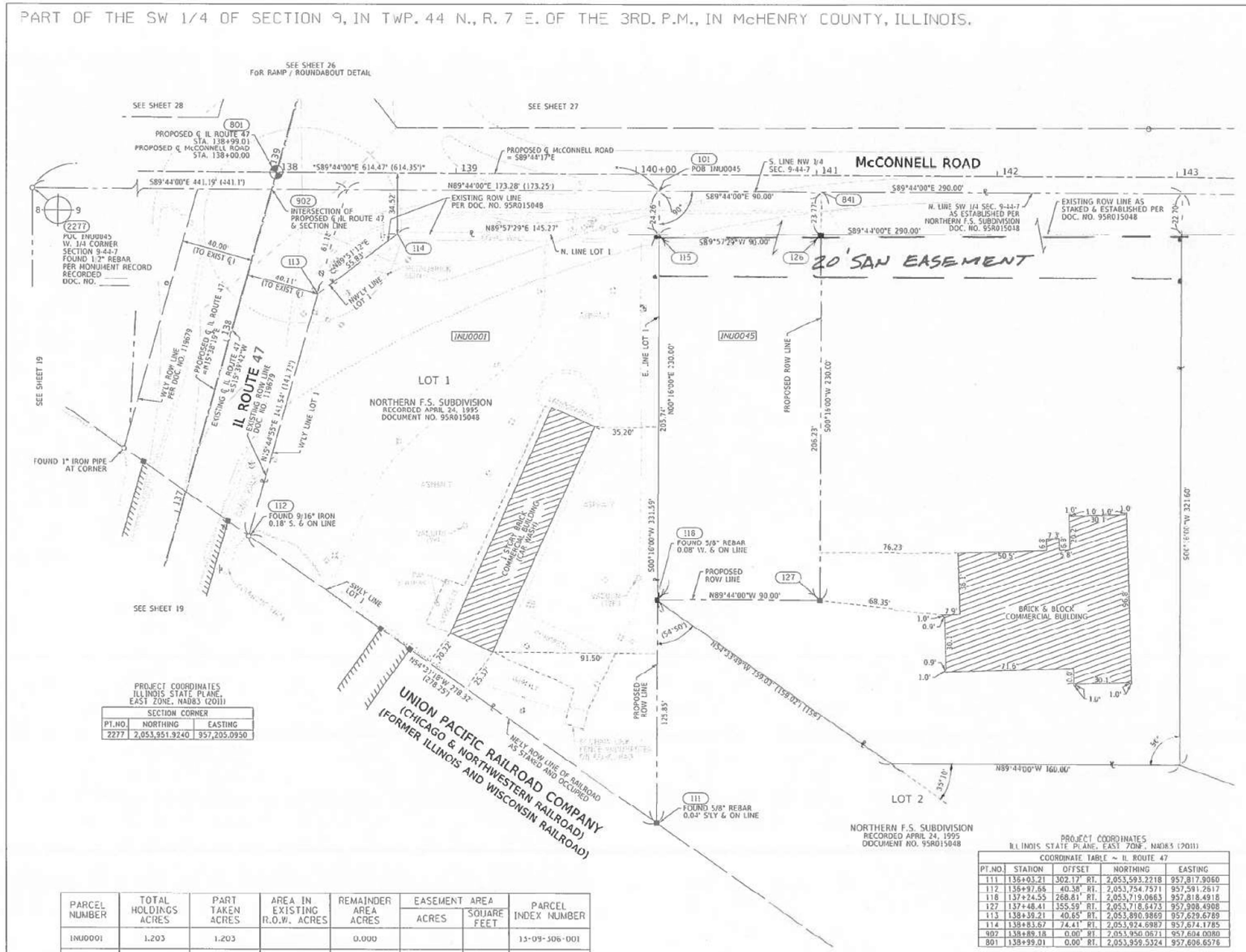

PROJECT COORDINATES
ILLINOIS STATE PLANE, EAST ZONE, NAD83 (2011)

SECTION CORNER		
PT.NO.	NORTHING	EASTING
2277	2,053,951.9240	957,205.0950

PARCEL NUMBER	TOTAL HOLDINGS ACRES	PART TAKEN ACRES	AREA IN EXISTING R.O.W. ACRES	REMAINDER AREA ACRES	EASEMENT AREA ACRES	EASEMENT AREA SQUARE FEET	PARCEL INDEX NUMBER
INU0001	1.203	1.203		0.000			13-09-306-001
INU0045	2.004	0.475	0.050	1.529			13-09-326-001

WOODSTOCK SANITARY EASEMENT, FOR REFERENCE ONLY – N.T.S

PROJECT COORDINATES
ILLINOIS STATE PLANE, EAST ZONE, NAD83 (2011)

COORDINATE TABLE – IL ROUTE 47				
PT.NO.	STATION	OFFSET	NORTHING	EASTING
111	136+03.21	302.17' RT.	2,053,593.2218	957,817.9060
112	136+97.66	40.38' RT.	2,053,754.7571	957,581.2617
118	137+24.55	268.81' RT.	2,053,719.0663	957,818.4918
127	137+48.41	355.59' RT.	2,053,718.6473	957,908.4908
113	138+39.21	40.65' RT.	2,053,890.9869	957,629.6789
114	138+83.67	74.41' RT.	2,053,924.6987	957,674.1785
902	138+89.18	0.00' RT.	2,053,950.0671	957,604.0080
801	138+99.01	0.00' RT.	2,053,959.5324	957,606.6576

PROJECT COORDINATES
ILLINOIS STATE PLANE, EAST ZONE, NAD83 (2011)

COORDINATE TABLE – McCONNELL ROAD				
PT.NO.	STATION	OFFSET	NORTHING	EASTING
902	137+97.39	9.48' RT.	2,053,950.0671	957,604.0080
801	138+00.00	0.00' RT.	2,053,959.5324	957,606.6576
113	138+23.33	68.44' RT.	2,053,890.9869	957,629.6789
114	138+67.68	34.52' RT.	2,053,924.6987	957,674.1785
118	140+12.93	239.50' RT.	2,053,719.0663	957,818.4918
101	140+12.93	9.50' RT.	2,053,949.0638	957,819.5674
115	140+12.93	33.75' RT.	2,053,924.8050	957,819.4494
127	141+02.93	239.50' RT.	2,053,718.6473	957,908.4908
841	141+02.95	9.50' RT.	2,053,948.6448	957,909.5614
126	141+02.95	33.28' RT.	2,053,924.8709	957,909.4507

REVISION DATE: / / REVISION MADE BY:

LEGEND

SECTION CORNER

QUARTER SECTION CORNER

GRAPHIC SCALE
FEET
0 30
SCALE: 1" = 30'

- SECTION / QUARTER SECTION LINE
- PLATTED LOT LINES
- PROPERTY (DEED) LINE
- APL — APPARENT PROPERTY LINE
- EXISTING CENTERLINE
- PROPOSED CENTERLINE
- EXISTING RIGHT OF WAY LINE
- PROPOSED RIGHT OF WAY LINE
- EXISTING EASEMENT
- PROPOSED EASEMENT
- AC — EXISTING ACCESS CONTROL LINE
- AC — PROPOSED ACCESS CONTROL LINE
- 129.32' MEASURED DIMENSION
- 129.32' (COMP) COMPUTED DIMENSION
- (129.32') RECORDED DIMENSION
- EXISTING BUILDING

BEARINGS ARE REFERENCED TO THE ILLINOIS STATE PLANE COORDINATE SYSTEM, NAD83 (2011 ADJUSTMENT), EAST ZONE.

- ○ IRON PIPE OR ROD FOUND
- ⊖ "MAG" NAIL SET
- + CUT CROSS FOUND OR SET
- ● 5/8" REBAR SET
- ■ STAKING OF PROPOSED RIGHT OF WAY. SET DIVISION OF HIGHWAYS SURVEY MARKER TO MONUMENT THE POSITION SHOWN. IDENTIFIED BY INSCRIPTION DATA AND SURVEYORS REGISTRATION NUMBER.
- ■ M STAKING OF PROPOSED RIGHT OF WAY IN CULTIVATED AREAS. BURIED 5/8 INCH METAL ROD 20 INCHES BELOW GROUND TO MARK FUTURE SURVEY MARKER POSITION IDENTIFIED BY COLORED PLASTIC CAP BEARING SURVEYORS REGISTRATION NUMBER.
- ⊕ PERMANENT SURVEY MARKER, I.D.O.T. STANDARD 667101.02 (TO BE SET BY OTHERS)
- □ RIGHT OF WAY STAKING PROPOSED TO BE SET

SURVEY NOTES:
1. ALL DIMENSIONS ARE MEASURED UNLESS OTHERWISE SPECIFIED.
2. BEARING, DISTANCES, AND COORDINATES SHOWN HEREON REFERENCE THE ILLINOIS STATE PLANE COORDINATE SYSTEM, EAST ZONE, NORTH AMERICAN DATUM OF 1983 (2011 ADJUSTMENT) "GRID". COORDINATES ARE FIXED HOLDING THE PUBLISHED NAD83(2011) VALUES FOR NGS CONTROL MONUMENTS DMOS, (PID:DL6753), MCH 14 2B, (PID:AJ2877) & CHARLES, (PID:AJ2973)
3. ALL MEASURED AND CALCULATED DISTANCES ARE "GRID" NOT "GROUND". TO OBTAIN GROUND DISTANCES, DIVIDE GRID DISTANCES SHOWN BY THE COMBINATION FACTOR OF 0.99993761.
4. AREAS SHOWN ON THIS PLAT ARE "GROUND".
5. FIELD SURVEY COMPLETED ON JUNE 2020.

STATE OF ILLINOIS)
)SS
COUNTY OF WILL)

THIS IS TO CERTIFY THAT I, DAVID A. CLAASSEN, AN ILLINOIS PROFESSIONAL LAND SURVEYOR, I.W.E. CLAASSEN, WHITE & ASSOCIATES, P.C. AN ILLINOIS PROFESSIONAL DESIGN FIRM LAND SURVEYING CORPORATION, NUMBER 184-004039,I HAVE SURVEYED THE PLAT OF HIGHWAYS SHOWN HEREON IN SECTION 9, TOWNSHIP 44 NORTH, RANGE 7 EAST OF THE THIRD PRINCIPAL MERIDIAN, MCHENRY COUNTY, THAT THE SURVEY IS TRUE AND COMPLETE AS SHOWN TO THE BEST OF MY KNOWLEDGE AND BELIEF, THAT THE PLAT CORRECTLY REPRESENTS SAID SURVEY, THAT ALL MONUMENTS FOUND AND ESTABLISHED ARE OF PERMANENT QUALITY AND OCCUPY THE POSITIONS SHOWN THEREON AND THAT THE MONUMENTS ARE SUFFICIENT TO ENABLE THE SURVEY TO BE RETRACED, MADE FOR THE DEPARTMENT OF TRANSPORTATION, STATE OF ILLINOIS.

DATED AT_____. ILLINOIS THIS __ DAY OF _____ 2020 A.D.

_____
ILLINOIS PROFESSIONAL LAND SURVEYOR NO. 035-002962
LICENSE EXPIRATION DATE: NOVEMBER 30, 2020

THIS PROFESSIONAL SERVICE CONFORMS TO THE CURRENT ILLINOIS MINIMUM STANDARDS FOR A BOUNDARY SURVEY.

STATE OF ILLINOIS PROFESSIONAL LAND SURVEYOR DAVID A. CLAASSEN JOLIET, IL NO. 2962

CWA SURVEY
CLAASSEN, WHITE & ASSOCIATES, P.C.
LAND SURVEYORS
121 AIRPORT DRIVE, UNIT 1, JOLIET, ILLINOIS 60431
(815) 744-3720 claassenwhite@cwasurvey.com
CWA Job #7300

PLAT OF HIGHWAYS
STATE OF ILLINOIS
DEPARTMENT OF TRANSPORTATION
IL ROUTE 47

LIMITS: IL 120 TO US 14 COUNTY: McHENRY
SECTION: JOB NO.: R-91-019-17
STA. 136+03.21 TO STA. 138+99.01
SCALE: 1" = 30' SHEET 20 OF 57 SHEETS

IDOT USE ONLY

APPROVED
By William Wright at 2:58 pm, Dec 03, 2020

BUREAU OF LAND ACQUISITION
201 WEST CENTER COURT
SCHAUMBURG, ILLINOIS 60196

MODEL: Default
FILE NAME: pw:\\aecom-na-pw.bentley.com:AECOM DS21_MA_2020\Documents\60632011-IL-47900-CAD\910_CAD\03_SHEETS\General\D160X17-sht-PLAT.dgn

AECOM
303 EAST WACKER DRIVE, SUITE 1400
CHICAGO, IL 60601-5276
PHONE: (312) 373-7700 FAX: (312) 373-6800

USER NAME = muniza	DESIGNED -	REVISED -
	DRAWN -	REVISED -
PLOT SCALE = 100.0000 ' / in.	CHECKED -	REVISED -
PLOT DATE = 2/7/2025	DATE -	REVISED -

STATE OF ILLINOIS
DEPARTMENT OF TRANSPORTATION

SCALE: SHEET OF SHEETS STA. TO STA.

F.A.P. RTE.	SECTION	COUNTY	TOTAL SHEETS	SHEET NO.
326	2024-1052-N,C,SW,FL	MCHENRY	941	629
		CONTRACT NO. 62X94		
		ILLINOIS FED. AID PROJECT		

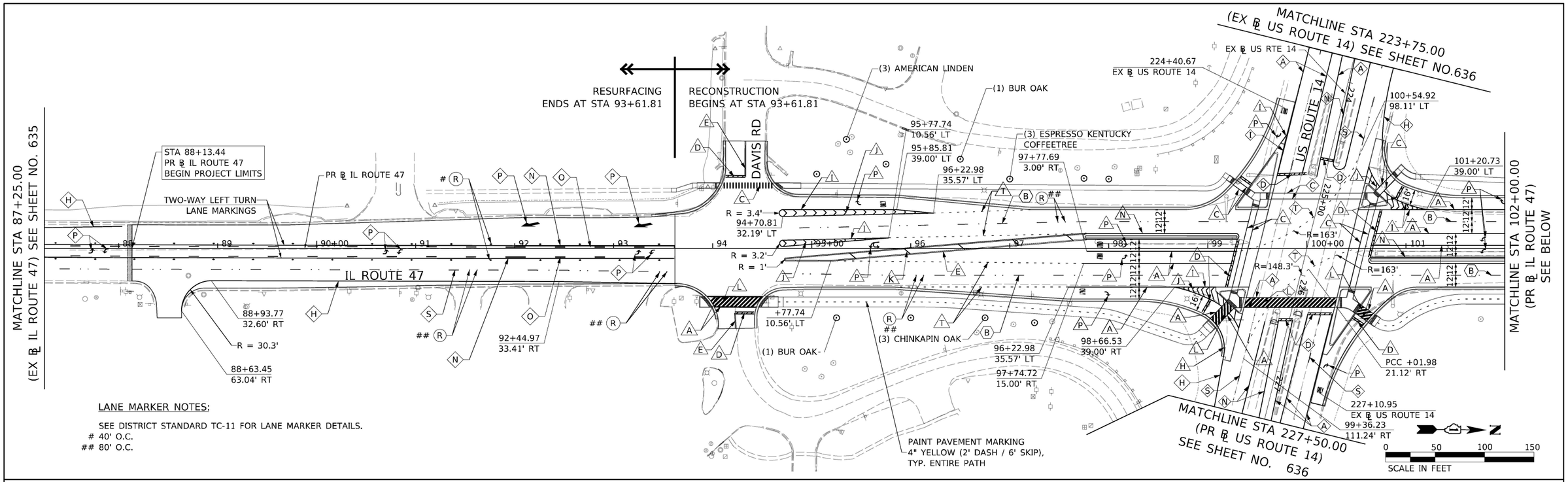

LANE MARKER NOTES:

SEE DISTRICT STANDARD TC-11 FOR LANE MARKER DETAILS.
40' O.C.
80' O.C.

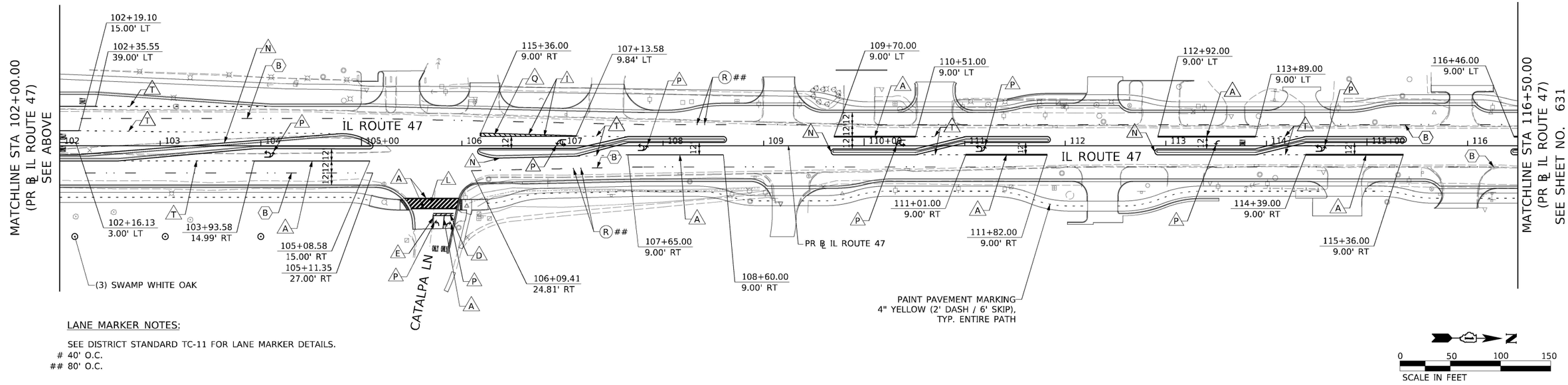

LANE MARKER NOTES:

SEE DISTRICT STANDARD TC-11 FOR LANE MARKER DETAILS.
40' O.C.
80' O.C.

LEGEND:

A - 6" WHITE SOLID
* B - 7" WHITE CONTRAST (10' DASH, 30' SKIP)
C - 12" WHITE SOLID (CROSSWALK)
D - 24" WHITE SOLID (STOP BAR)
E - 4" DOUBLE YELLOW SOLID (AT 11" C-C)
F - 24" WHITE (2' DASH, 2' SKIP)
** G - 9" WHITE CONTRAST (2' DASH, 6' SKIP)
H - 4" WHITE SOLID
I - 8" WHITE SOLID
J - 12" WHITE CHEVRONS
K - 12" YELLOW DIAGONAL (45°, AT 50' C-C)
L - 12" WHITE CROSSWALK (45°, AT 3' C-C)
M - 6" WHITE (3' DASH, 9' SKIP)
N - 4" YELLOW SOLID
O - 4" YELLOW (10' DASH, 30' SKIP)
P - LETTERS AND SYMBOLS, WHITE
Q - 12" WHITE DIAGONAL
R - RAISED REFLECTIVE PAVEMENT MARKER
S - 4" WHITE (10' DASH, 30' SKIP)
T - 6" WHITE (2' DASH, 6' SKIP)
* 7" WHITE CONTRAST
(1.5" BLACK, 4" WHITE, 1.5" BLACK)
** 9 WHITE CONTRAST
(1.5" BLACK, 6" WHITE, 1.5" BLACK)
⊙ PROPOSED TREE
ADDITIONAL CITY OF WOODSTOCK
LANDSCAPE TREES AND SHRUBS
SHOWN ON SHEETS 687 TO SLDSCP012

PAVEMENT MARKING MATERIAL:

◇ THERMOPLASTIC PAVEMENT MARKING

△ MODIFIED URETHANE PAVEMENT MARKING

⬡ CONTRAST PREFORMED PLASTIC PAVEMENT MARKING, TYPE D AND GROOVING FOR RECESSED PAVEMENT MARKING

NOTES:

1) ALL DAMAGE TO EXISTING PAVEMENT MARKINGS OR RAISED REFLECTIVE PAVEMENT MARKERS OUTSIDE OF THE IMPROVEMENT LIMITS SHOWN ON THE PLANS SHALL BE REPLACED AT THE CONTRACTOR'S EXPENSE.

2) BEFORE BEGINNING ANY WORK, THE CONTRACTOR SHALL RECORD AND RETAIN ALL EXISTING PAVEMENT MARKINGS AND MARKERS FOR FUTURE REFERENCE. EXACT LOCATIONS OF ALL PAVEMENT MARKINGS SHALL BE DIRECTED BY THE ENGINEER.

3) STATIONS PROVIDED REFER TO PR ℄ IL ROUTE 47 UNLESS OTHERWISE NOTED.

4) PROPOSED TREE LOCATIONS MAY BE ADJUSTED IN THE FIELD DUE TO DRAINAGE AND UTILITIES. CONTRACTOR SHALL CONTRACT THE ROADSIDE DEVELOPMENT UNITY AT (847) 705-4171 ONE WEEK PRIOR TO INSTALLATION TO APPROVE LOCATIONS.

AECOM
303 EAST WACKER DRIVE, SUITE 1400
CHICAGO, IL 60601-5276
PHONE: (312) 373-7700 FAX: (312) 373-6800

USER NAME = muniza	DESIGNED - APA	REVISED -
	DRAWN - KWM	REVISED -
PLOT SCALE = 100.0000 ' / in.	CHECKED - TJW	REVISED -
PLOT DATE = 2/12/2025	DATE - 02/06/2025	REVISED -

STATE OF ILLINOIS
DEPARTMENT OF TRANSPORTATION

IL-47 PAVEMENT MARKING AND LANDSCAPING PLANS

SCALE: 1" = 50' | SHEET 1 OF 15 SHEETS | STA. | TO STA.

F.A.P. RTE.	SECTION	COUNTY	TOTAL SHEETS	SHEET NO.
326	2024-1052-N,C,SW,FL	MCHENRY	941	630
		CONTRACT NO. 62X94		
		ILLINOIS	FED. AID PROJECT	

MODEL: Default
FILE NAME: pw:\\aecom-na-pw.bentley.com:AECOM_DS21_NA_2020\Documents\60632011-IL-47(60-CAD\03_SHEETS\CivilD160X17-sht-pmk-01.dgn

NOTES:

1) ALL DAMAGE TO EXISTING PAVEMENT MARKINGS OR RAISED REFLECTIVE PAVEMENT MARKERS OUTSIDE OF THE IMPROVEMENT LIMITS SHOWN ON THE PLANS SHALL BE REPLACED AT THE CONTRACTOR'S EXPENSE.

2) BEFORE BEGINNING ANY WORK, THE CONTRACTOR SHALL RECORD AND RETAIN ALL EXISTING PAVEMENT MARKINGS AND MARKERS FOR FUTURE REFERENCE. EXACT LOCATIONS OF ALL PAVEMENT MARKINGS SHALL BE DIRECTED BY THE ENGINEER.

3) STATIONS PROVIDED REFER TO PR ℄ IL ROUTE 47 UNLESS OTHERWISE NOTED.

4) PROPOSED TREE LOCATIONS MAY BE ADJUSTED IN THE FIELD DUE TO DRAINAGE AND UTILITIES. CONTRACTOR SHALL CONTRACT THE ROADSIDE DEVELOPMENT UNITY AT (847) 705-4171 ONE WEEK PRIOR TO INSTALLATION TO APPROVE LOCATIONS.

LANE MARKER NOTES:

SEE DISTRICT STANDARD TC-11 FOR LANE MARKER DETAILS.
40' O.C.
80' O.C.

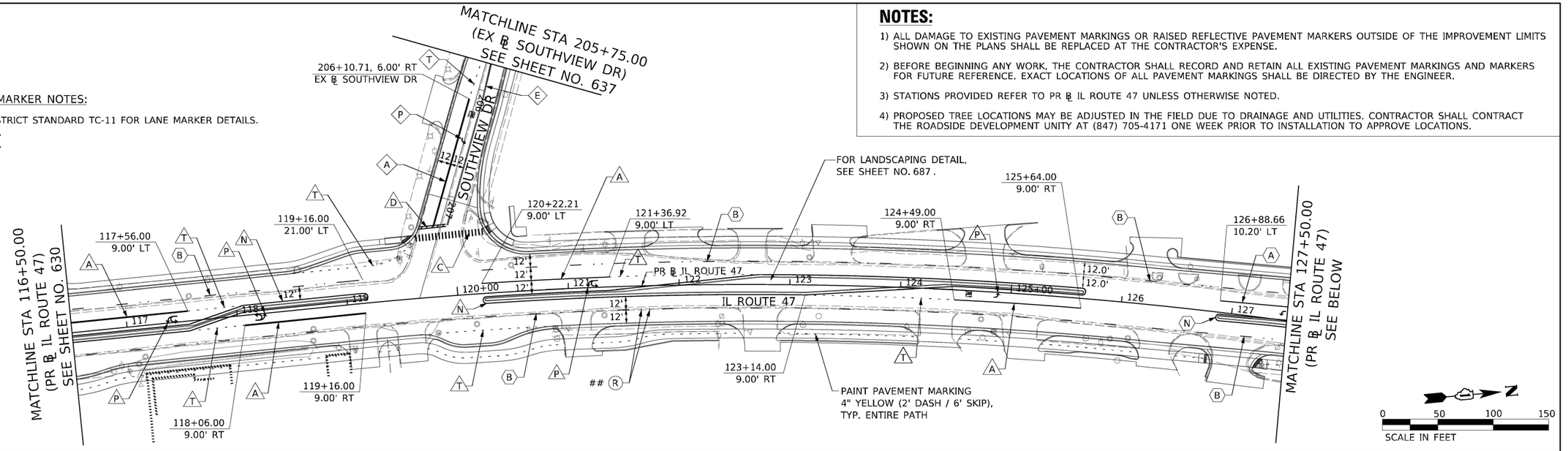

LEGEND:

- A - 6" WHITE SOLID
- * B - 7" WHITE CONTRAST (10' DASH, 30' SKIP)
- C - 12" WHITE SOLID (CROSSWALK)
- D - 24" WHITE SOLID (STOP BAR)
- E - 4" DOUBLE YELLOW SOLID (AT 11" C-C)
- F - 24" WHITE (2' DASH, 2' SKIP)
- ** G - 9" WHITE CONTRAST (2' DASH, 6' SKIP)
- H - 4" WHITE SOLID
- I - 8" WHITE SOLID
- J - 12" WHITE CHEVRONS
- K - 12" YELLOW DIAGONAL (45°, AT 50' C-C)
- L - 12" WHITE CROSSWALK (45°, AT 3' C-C)
- M - 6" WHITE (3' DASH, 9' SKIP)
- N - 4" YELLOW SOLID
- O - 4" YELLOW (10' DASH, 30' SKIP)
- P - LETTERS AND SYMBOLS, WHITE
- Q - 12" WHITE DIAGONAL
- R - RAISED REFLECTIVE PAVEMENT MARKER
- S - 4" WHITE (10' DASH, 30' SKIP)
- T - 6" WHITE (2' DASH, 6' SKIP)
- * 7" WHITE CONTRAST (1.5" BLACK, 4" WHITE, 1.5" BLACK)
- ** 9 WHITE CONTRAST (1.5" BLACK, 6" WHITE, 1.5" BLACK)
- ⊙ PROPOSED TREE

ADDITIONAL CITY OF WOODSTOCK LANDSCAPE TREES AND SHRUBS SHOWN ON SHEETS 687 TO $LDSCP012

PAVEMENT MARKING MATERIAL:

- ◇ THERMOPLASTIC PAVEMENT MARKING
- △ MODIFIED URETHANE PAVEMENT MARKING
- ⬡ CONTRAST PREFORMED PLASTIC PAVEMENT MARKING, TYPE D AND GROOVING FOR RECESSED PAVEMENT MARKING

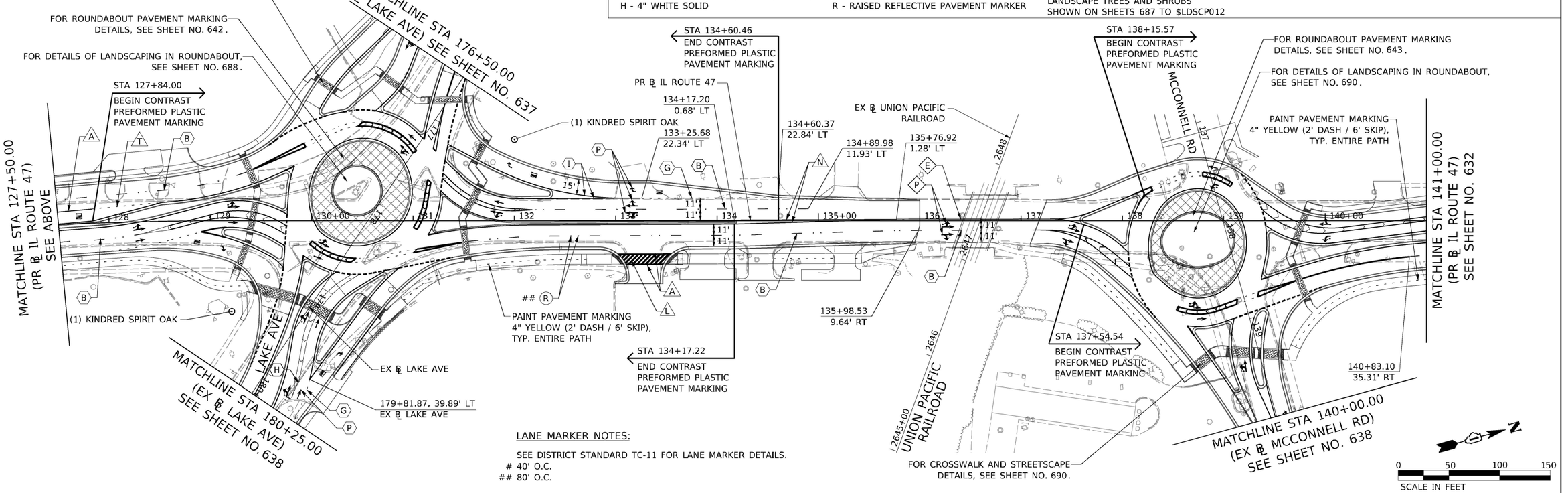

LANE MARKER NOTES:

SEE DISTRICT STANDARD TC-11 FOR LANE MARKER DETAILS.
40' O.C.
80' O.C.

MODEL: Default
FILE NAME: pw:\\aecom-na-pw.bentley.com:AECOM_DS21_NA_2020\Documents\60632011-IL-47900-CADD\10_CADD\03_SHEETS\Civil\D160X17-sht-pmk-02.dgn

AECOM
303 EAST WACKER DRIVE, SUITE 1400
CHICAGO, IL 60601-5276
PHONE: (312) 373-7700 FAX: (312) 373-6800

USER NAME = muniza	DESIGNED - APA	REVISED -	
	DRAWN - KWM	REVISED -	
PLOT SCALE = 100.0000 ' / in.	CHECKED - TJW	REVISED -	
PLOT DATE = 3/11/2025	DATE - 03/07/2025	REVISED -	

STATE OF ILLINOIS
DEPARTMENT OF TRANSPORTATION

IL-47 PAVEMENT MARKING AND LANDSCAPING PLANS

SCALE: 1" = 50' | SHEET 2 OF 15 SHEETS | STA. | TO STA.

F.A.P. RTE.	SECTION	COUNTY	TOTAL SHEETS	SHEET NO.
326	2024-1052-N,C,SW,FL	MCHENRY	941	631
		CONTRACT NO. 62X94		
	ILLINOIS FED. AID PROJECT			

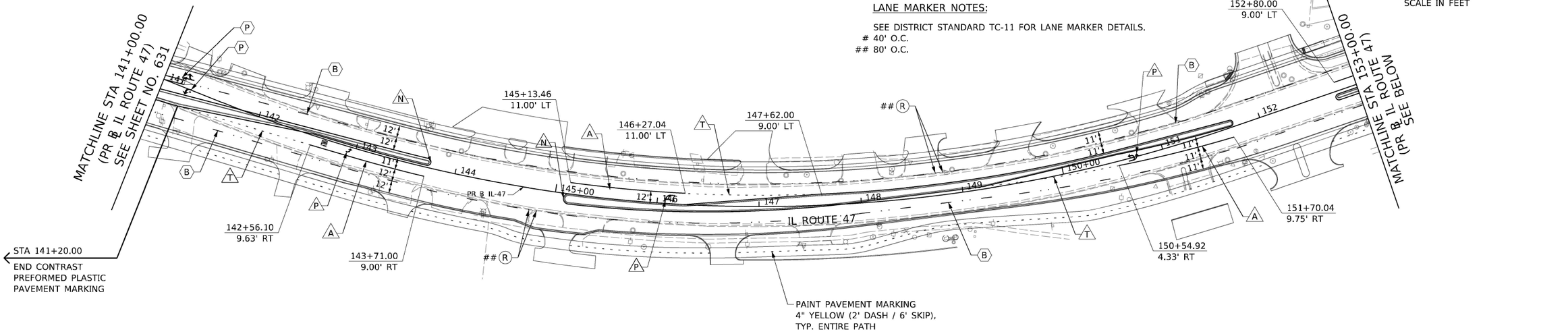

LANE MARKER NOTES:

SEE DISTRICT STANDARD TC-11 FOR LANE MARKER DETAILS.
40' O.C.
80' O.C.

0 50 100 150
SCALE IN FEET

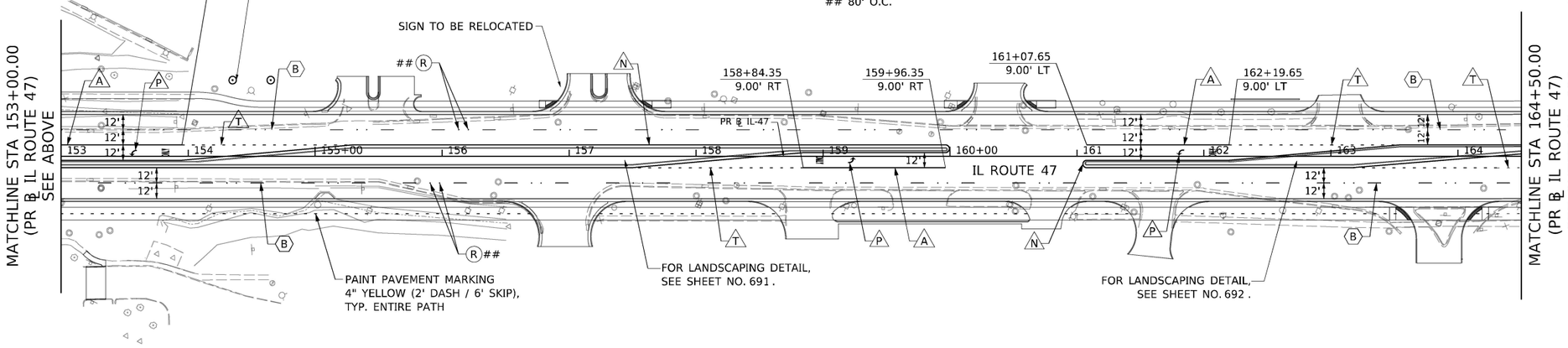

LANE MARKER NOTES:

SEE DISTRICT STANDARD TC-11 FOR LANE MARKER DETAILS.
40' O.C.
80' O.C.

0 50 100 150
SCALE IN FEET

LEGEND:

A - 6" WHITE SOLID
* B - 7" WHITE CONTRAST (10' DASH, 30' SKIP)
C - 12" WHITE SOLID (CROSSWALK)
D - 24" WHITE SOLID (STOP BAR)
E - 4" DOUBLE YELLOW SOLID (AT 11" C-C)
F - 24" WHITE (2' DASH, 2' SKIP)
** G - 9" WHITE CONTRAST (2' DASH, 6' SKIP)
H - 4" WHITE SOLID
I - 8" WHITE SOLID
J - 12" WHITE CHEVRONS
K - 12" YELLOW DIAGONAL (45°, AT 50' C-C)
L - 12" WHITE CROSSWALK (45°, AT 3' C-C)
M - 6" WHITE (3' DASH, 9' SKIP)
N - 4" YELLOW SOLID
O - 4" YELLOW (10' DASH, 30' SKIP)
P - LETTERS AND SYMBOLS, WHITE
Q - 12" WHITE DIAGONAL
R - RAISED REFLECTIVE PAVEMENT MARKER
S - 4" WHITE (10' DASH, 30' SKIP)
T - 6" WHITE (2' DASH, 6' SKIP)
* 7" WHITE CONTRAST
(1.5" BLACK, 4" WHITE, 1.5" BLACK)
** 9 WHITE CONTRAST
(1.5" BLACK, 6" WHITE, 1.5" BLACK)
⊙ PROPOSED TREE
ADDITIONAL CITY OF WOODSTOCK
LANDSCAPE TREES AND SHRUBS
SHOWN ON SHEETS 687 TO SLDSCP012

PAVEMENT MARKING MATERIAL:

◇ THERMOPLASTIC PAVEMENT MARKING

△ MODIFIED URETHANE PAVEMENT MARKING

⬡ CONTRAST PREFORMED PLASTIC PAVEMENT MARKING, TYPE D AND GROOVING FOR RECESSED PAVEMENT MARKING

NOTES:

1) ALL DAMAGE TO EXISTING PAVEMENT MARKINGS OR RAISED REFLECTIVE PAVEMENT MARKERS OUTSIDE OF THE IMPROVEMENT LIMITS SHOWN ON THE PLANS SHALL BE REPLACED AT THE CONTRACTOR'S EXPENSE.

2) BEFORE BEGINNING ANY WORK, THE CONTRACTOR SHALL RECORD AND RETAIN ALL EXISTING PAVEMENT MARKINGS AND MARKERS FOR FUTURE REFERENCE. EXACT LOCATIONS OF ALL PAVEMENT MARKINGS SHALL BE DIRECTED BY THE ENGINEER.

3) STATIONS PROVIDED REFER TO PR ℄ IL ROUTE 47 UNLESS OTHERWISE NOTED.

4) PROPOSED TREE LOCATIONS MAY BE ADJUSTED IN THE FIELD DUE TO DRAINAGE AND UTILITIES. CONTRACTOR SHALL CONTRACT THE ROADSIDE DEVELOPMENT UNITY AT (847) 705-4171 ONE WEEK PRIOR TO INSTALLATION TO APPROVE LOCATIONS.

AECOM
303 EAST WACKER DRIVE, SUITE 1400
CHICAGO, IL 60601-5276
PHONE: (312) 373-7700 FAX: (312) 373-6800

USER NAME = muniza	DESIGNED - APA	REVISED -	
	DRAWN - KWM	REVISED -	
PLOT SCALE = 100.0000 ' / in.	CHECKED - TJW	REVISED -	
PLOT DATE = 2/12/2025	DATE - 02/06/2025	REVISED -	

STATE OF ILLINOIS
DEPARTMENT OF TRANSPORTATION

IL–47 PAVEMENT MARKING AND LANDSCAPING PLANS

SCALE: 1" = 50' | SHEET 3 OF 15 SHEETS | STA. | TO STA.

F.A.P. RTE.	SECTION	COUNTY	TOTAL SHEETS	SHEET NO.
326	2024-1052-N,C,SW,FL	MCHENRY	941	632
		CONTRACT NO. 62X94		
	ILLINOIS FED. AID PROJECT			

MODEL: Default
FILE NAME: pw:\\aecom-na-pw.bentley.com:AECOM_DS21_NA_2020\Documents\60632011-IL-47000-CAD\910_CAD\03_SHEETS\CIVIL\D160X17-sht-pmk-03.dgn

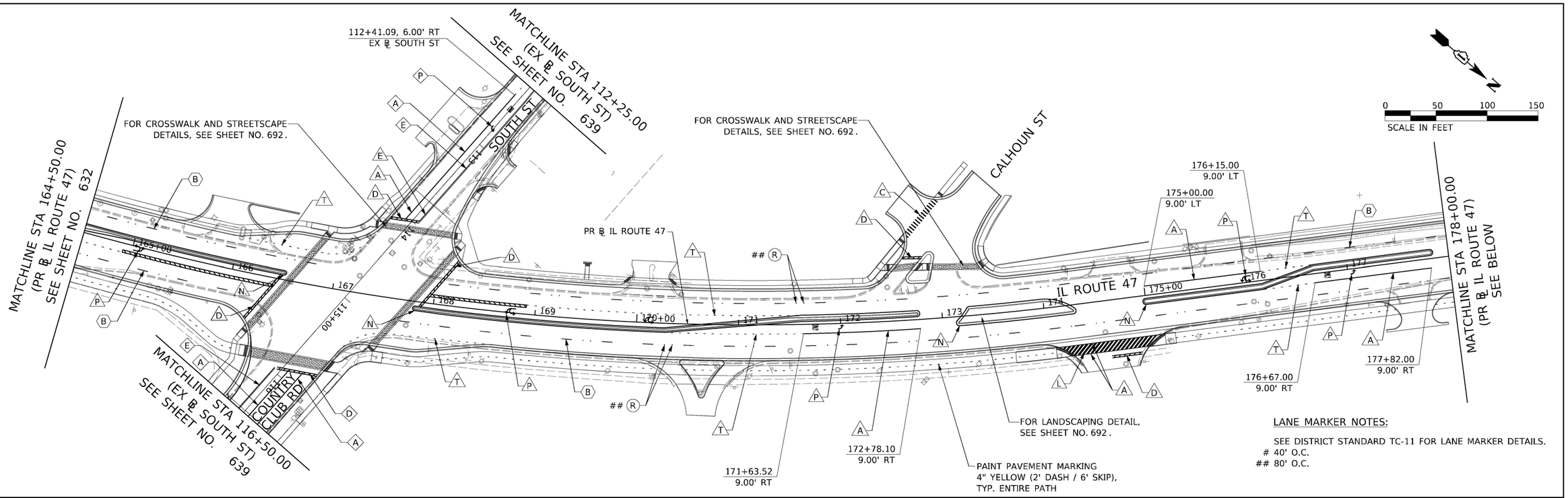

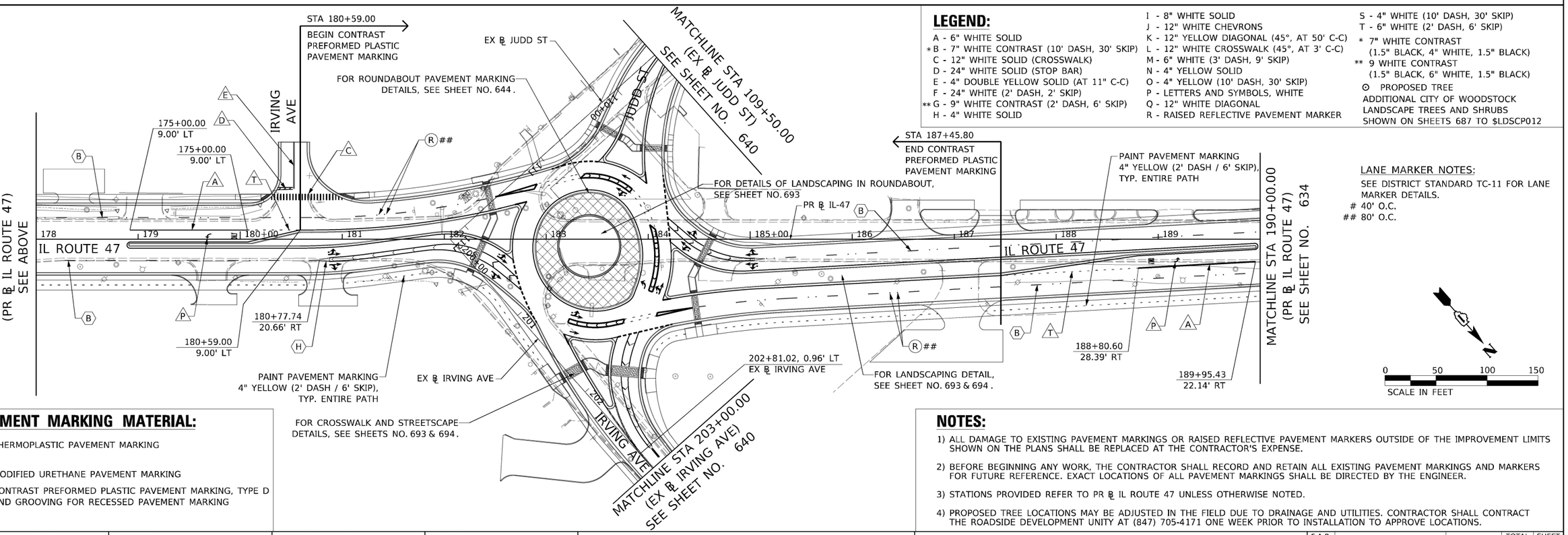

LEGEND:

- A - 6" WHITE SOLID
- * B - 7" WHITE CONTRAST (10' DASH, 30' SKIP)
- C - 12" WHITE SOLID (CROSSWALK)
- D - 24" WHITE SOLID (STOP BAR)
- E - 4" DOUBLE YELLOW SOLID (AT 11" C-C)
- F - 24" WHITE (2' DASH, 2' SKIP)
- ** G - 9" WHITE CONTRAST (2' DASH, 6' SKIP)
- H - 4" WHITE SOLID
- I - 8" WHITE SOLID
- J - 12" WHITE CHEVRONS
- K - 12" YELLOW DIAGONAL (45°, AT 50' C-C)
- L - 12" WHITE CROSSWALK (45°, AT 3' C-C)
- M - 6" WHITE (3' DASH, 9' SKIP)
- N - 4" YELLOW SOLID
- O - 4" YELLOW (10' DASH, 30' SKIP)
- P - LETTERS AND SYMBOLS, WHITE
- Q - 12" WHITE DIAGONAL
- R - RAISED REFLECTIVE PAVEMENT MARKER
- S - 4" WHITE (10' DASH, 30' SKIP)
- T - 6" WHITE (2' DASH, 6' SKIP)
- * 7" WHITE CONTRAST (1.5" BLACK, 4" WHITE, 1.5" BLACK)
- ** 9 WHITE CONTRAST (1.5" BLACK, 6" WHITE, 1.5" BLACK)
- ⊙ PROPOSED TREE
  ADDITIONAL CITY OF WOODSTOCK LANDSCAPE TREES AND SHRUBS SHOWN ON SHEETS 687 TO $LDSCP012

PAVEMENT MARKING MATERIAL:

- THERMOPLASTIC PAVEMENT MARKING
- MODIFIED URETHANE PAVEMENT MARKING
- CONTRAST PREFORMED PLASTIC PAVEMENT MARKING, TYPE D AND GROOVING FOR RECESSED PAVEMENT MARKING

NOTES:

1) ALL DAMAGE TO EXISTING PAVEMENT MARKINGS OR RAISED REFLECTIVE PAVEMENT MARKERS OUTSIDE OF THE IMPROVEMENT LIMITS SHOWN ON THE PLANS SHALL BE REPLACED AT THE CONTRACTOR'S EXPENSE.
2) BEFORE BEGINNING ANY WORK, THE CONTRACTOR SHALL RECORD AND RETAIN ALL EXISTING PAVEMENT MARKINGS AND MARKERS FOR FUTURE REFERENCE. EXACT LOCATIONS OF ALL PAVEMENT MARKINGS SHALL BE DIRECTED BY THE ENGINEER.
3) STATIONS PROVIDED REFER TO PR ℄ IL ROUTE 47 UNLESS OTHERWISE NOTED.
4) PROPOSED TREE LOCATIONS MAY BE ADJUSTED IN THE FIELD DUE TO DRAINAGE AND UTILITIES. CONTRACTOR SHALL CONTRACT THE ROADSIDE DEVELOPMENT UNITY AT (847) 705-4171 ONE WEEK PRIOR TO INSTALLATION TO APPROVE LOCATIONS.

AECOM
303 EAST WACKER DRIVE, SUITE 1400
CHICAGO, IL 60601-5276
PHONE: (312) 373-7700 FAX: (312) 373-6800

USER NAME = muniza	DESIGNED - APA	REVISED -	
	DRAWN - KWM	REVISED -	
PLOT SCALE = 100.0000 ' / in.	CHECKED - TJW	REVISED -	
PLOT DATE = 3/11/2025	DATE - 03/07/2025	REVISED -	

STATE OF ILLINOIS
DEPARTMENT OF TRANSPORTATION

IL-47 PAVEMENT MARKING AND LANDSCAPING PLANS

SCALE: 1" = 50' | SHEET 4 OF 15 SHEETS | STA. | TO STA.

F.A.P. RTE.	SECTION	COUNTY	TOTAL SHEETS	SHEET NO.
326	2024-1052-N,C,SW,FL	MCHENRY	941	633
		CONTRACT NO. 62X94		
		ILLINOIS	FED. AID PROJECT	

MODEL: Default
FILE NAME: pw:\\aecom-na-pw.bentley.com:AECOM_DS21_NA_2020\Documents\60632011-IL-47\900-CAD\910_CAD\03_SHEETS\Civil\D160X17-sht-pmk-04.dgn

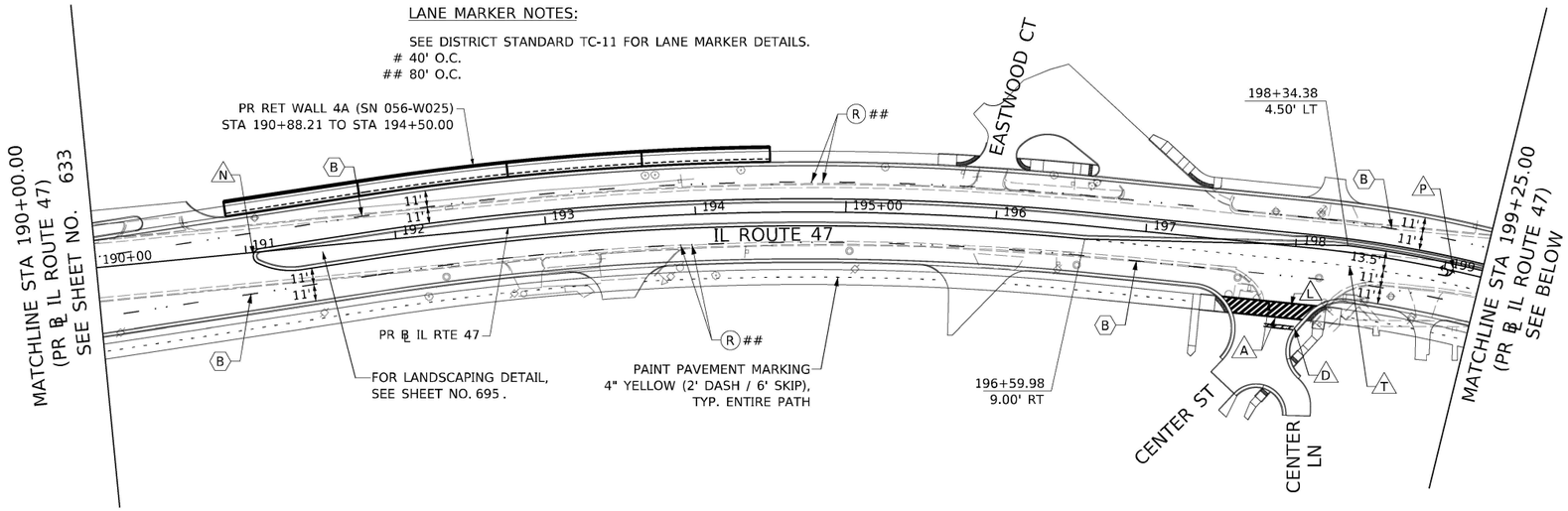

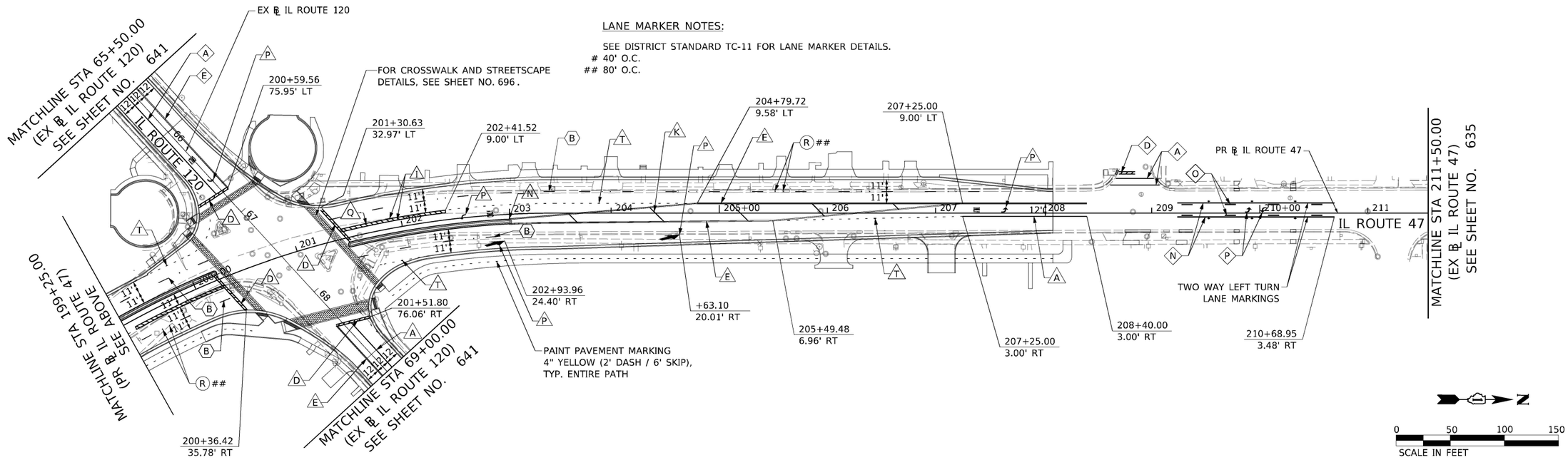

LEGEND:

- A - 6" WHITE SOLID
- * B - 7" WHITE CONTRAST (10' DASH, 30' SKIP)
- C - 12" WHITE SOLID (CROSSWALK)
- D - 24" WHITE SOLID (STOP BAR)
- E - 4" DOUBLE YELLOW SOLID (AT 11" C-C)
- F - 24" WHITE (2' DASH, 2' SKIP)
- ** G - 9" WHITE CONTRAST (2' DASH, 6' SKIP)
- H - 4" WHITE SOLID
- I - 8" WHITE SOLID
- J - 12" WHITE CHEVRONS
- K - 12" YELLOW DIAGONAL (45°, AT 50' C-C)
- L - 12" WHITE CROSSWALK (45°, AT 3' C-C)
- M - 6" WHITE (3' DASH, 9' SKIP)
- N - 4" YELLOW SOLID
- O - 4" YELLOW (10' DASH, 30' SKIP)
- P - LETTERS AND SYMBOLS, WHITE
- Q - 12" WHITE DIAGONAL
- R - RAISED REFLECTIVE PAVEMENT MARKER
- S - 4" WHITE (10' DASH, 30' SKIP)
- T - 6" WHITE (2' DASH, 6' SKIP)
- * 7" WHITE CONTRAST (1.5" BLACK, 4" WHITE, 1.5" BLACK)
- ** 9 WHITE CONTRAST (1.5" BLACK, 6" WHITE, 1.5" BLACK)
- ⊙ PROPOSED TREE
  ADDITIONAL CITY OF WOODSTOCK LANDSCAPE TREES AND SHRUBS SHOWN ON SHEETS 687 TO SLDSCP012

PAVEMENT MARKING MATERIAL:

- ◇ THERMOPLASTIC PAVEMENT MARKING
- △ MODIFIED URETHANE PAVEMENT MARKING
- ⬡ CONTRAST PREFORMED PLASTIC PAVEMENT MARKING, TYPE D AND GROOVING FOR RECESSED PAVEMENT MARKING

NOTES:

1) ALL DAMAGE TO EXISTING PAVEMENT MARKINGS OR RAISED REFLECTIVE PAVEMENT MARKERS OUTSIDE OF THE IMPROVEMENT LIMITS SHOWN ON THE PLANS SHALL BE REPLACED AT THE CONTRACTOR'S EXPENSE.
2) BEFORE BEGINNING ANY WORK, THE CONTRACTOR SHALL RECORD AND RETAIN ALL EXISTING PAVEMENT MARKINGS AND MARKERS FOR FUTURE REFERENCE. EXACT LOCATIONS OF ALL PAVEMENT MARKINGS SHALL BE DIRECTED BY THE ENGINEER.
3) STATIONS PROVIDED REFER TO PR ℄ IL ROUTE 47 UNLESS OTHERWISE NOTED.
4) PROPOSED TREE LOCATIONS MAY BE ADJUSTED IN THE FIELD DUE TO DRAINAGE AND UTILITIES. CONTRACTOR SHALL CONTRACT THE ROADSIDE DEVELOPMENT UNITY AT (847) 705-4171 ONE WEEK PRIOR TO INSTALLATION TO APPROVE LOCATIONS.

AECOM
303 EAST WACKER DRIVE, SUITE 1400
CHICAGO, IL 60601-5276
PHONE: (312) 373-7700 FAX: (312) 373-6800

USER NAME = muniza	DESIGNED - APA	REVISED -
	DRAWN - KWM	REVISED -
PLOT SCALE = 100.0000 ' / in.	CHECKED - TJW	REVISED -
PLOT DATE = 2/12/2025	DATE - 02/06/2025	REVISED -

STATE OF ILLINOIS
DEPARTMENT OF TRANSPORTATION

IL–47 PAVEMENT MARKING AND LANDSCAPING PLANS

SCALE: 1" = 50' | SHEET 5 OF 15 SHEETS | STA. | TO STA.

F.A.P. RTE.	SECTION	COUNTY	TOTAL SHEETS	SHEET NO.
326	2024-1052-N,C,SW,FL	MCHENRY	941	634
		CONTRACT NO. 62X94		
	ILLINOIS FED. AID PROJECT			

MODEL: Default
FILE NAME: pw:\\aecom-ra-pw.bentley.com:AECOM_DS21_NA_2020Documents\60632011-IL-47(600-CAD)\10_CAD\03_SHEETS\CivilD160X17-sht-pmk-05.dgn

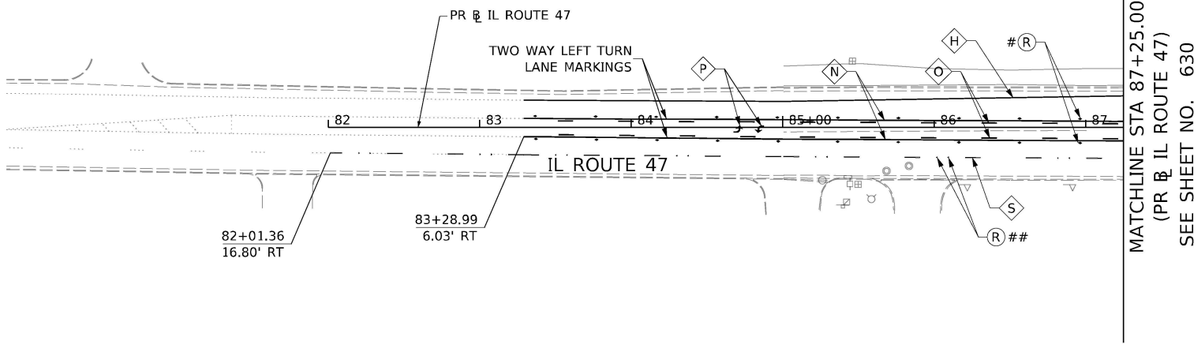

LANE MARKER NOTES:

SEE DISTRICT STANDARD TC-11 FOR LANE MARKER DETAILS.
40' O.C.
80' O.C.

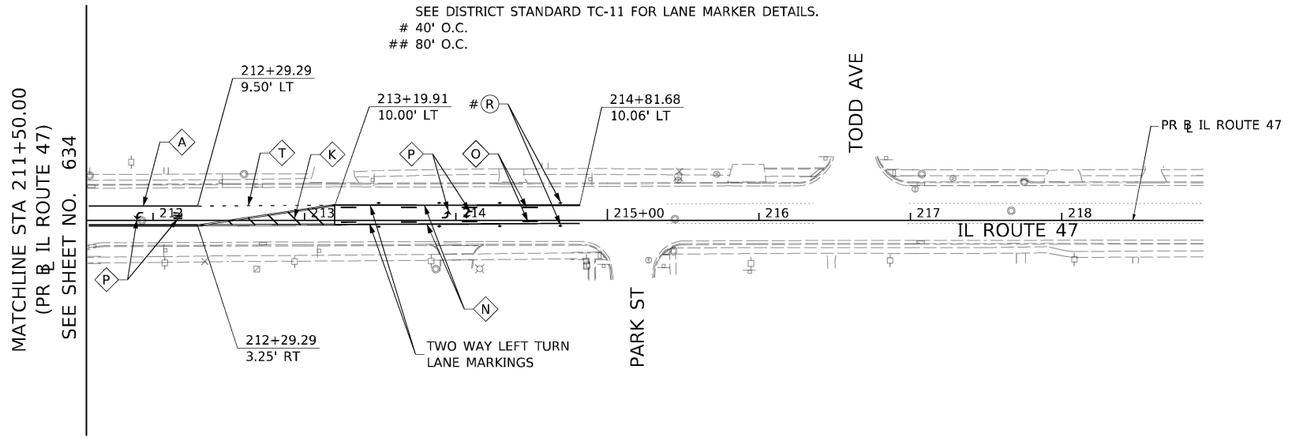

LEGEND:

A - 6" WHITE SOLID
* B - 7" WHITE CONTRAST (10' DASH, 30' SKIP)
C - 12" WHITE SOLID (CROSSWALK)
D - 24" WHITE SOLID (STOP BAR)
E - 4" DOUBLE YELLOW SOLID (AT 11" C-C)
F - 24" WHITE (2' DASH, 2' SKIP)
** G - 9" WHITE CONTRAST (2' DASH, 6' SKIP)
H - 4" WHITE SOLID
I - 8" WHITE SOLID
J - 12" WHITE CHEVRONS
K - 12" YELLOW DIAGONAL (45°, AT 50' C-C)
L - 12" WHITE CROSSWALK (45°, AT 3' C-C)
M - 6" WHITE (3' DASH, 9' SKIP)
N - 4" YELLOW SOLID
O - 4" YELLOW (10' DASH, 30' SKIP)
P - LETTERS AND SYMBOLS, WHITE
Q - 12" WHITE DIAGONAL
R - RAISED REFLECTIVE PAVEMENT MARKER
S - 4" WHITE (10' DASH, 30' SKIP)
T - 6" WHITE (2' DASH, 6' SKIP)
* 7" WHITE CONTRAST (1.5" BLACK, 4" WHITE, 1.5" BLACK)
** 9 WHITE CONTRAST (1.5" BLACK, 6" WHITE, 1.5" BLACK)
⊙ PROPOSED TREE
ADDITIONAL CITY OF WOODSTOCK LANDSCAPE TREES AND SHRUBS SHOWN ON SHEETS 687 TO SLDSCP012

PAVEMENT MARKING MATERIAL:

THERMOPLASTIC PAVEMENT MARKING

MODIFIED URETHANE PAVEMENT MARKING

CONTRAST PREFORMED PLASTIC PAVEMENT MARKING, TYPE D AND GROOVING FOR RECESSED PAVEMENT MARKING

NOTES:

1) ALL DAMAGE TO EXISTING PAVEMENT MARKINGS OR RAISED REFLECTIVE PAVEMENT MARKERS OUTSIDE OF THE IMPROVEMENT LIMITS SHOWN ON THE PLANS SHALL BE REPLACED AT THE CONTRACTOR'S EXPENSE.

2) BEFORE BEGINNING ANY WORK, THE CONTRACTOR SHALL RECORD AND RETAIN ALL EXISTING PAVEMENT MARKINGS AND MARKERS FOR FUTURE REFERENCE. EXACT LOCATIONS OF ALL PAVEMENT MARKINGS SHALL BE DIRECTED BY THE ENGINEER.

3) STATIONS PROVIDED REFER TO PR ℄ IL ROUTE 47 UNLESS OTHERWISE NOTED.

4) PROPOSED TREE LOCATIONS MAY BE ADJUSTED IN THE FIELD DUE TO DRAINAGE AND UTILITIES. CONTRACTOR SHALL CONTRACT THE ROADSIDE DEVELOPMENT UNITY AT (847) 705-4171 ONE WEEK PRIOR TO INSTALLATION TO APPROVE LOCATIONS.

AECOM
303 EAST WACKER DRIVE, SUITE 1400
CHICAGO, IL 60601-5276
PHONE: (312) 373-7700 FAX: (312) 373-6800

USER NAME = muniza	DESIGNED - APA	REVISED -
	DRAWN - KWM	REVISED -
PLOT SCALE = 100.0000 ' / In.	CHECKED - TJW	REVISED -
PLOT DATE = 2/12/2025	DATE - 02/06/2025	REVISED -

STATE OF ILLINOIS
DEPARTMENT OF TRANSPORTATION

IL–47 PAVEMENT MARKING AND LANDSCAPING PLANS

SCALE: 1" = 50' | SHEET 6 OF 15 SHEETS | STA. | TO STA.

F.A.P. RTE.	SECTION	COUNTY	TOTAL SHEETS	SHEET NO.
326	2024-1052-N,C,SW,FL	MCHENRY	941	635
		CONTRACT NO. 62X94		
		ILLINOIS	FED. AID PROJECT	

MODEL: Default
FILE NAME: pw:\\aecom-na-pw.bentley.com:AECOM_DS21_NA_2020\Documents\60632011-IL-471900-CAD\910_CAD\03_SHEETS\Civil\D160X17-sht-pmk-05A.dgn

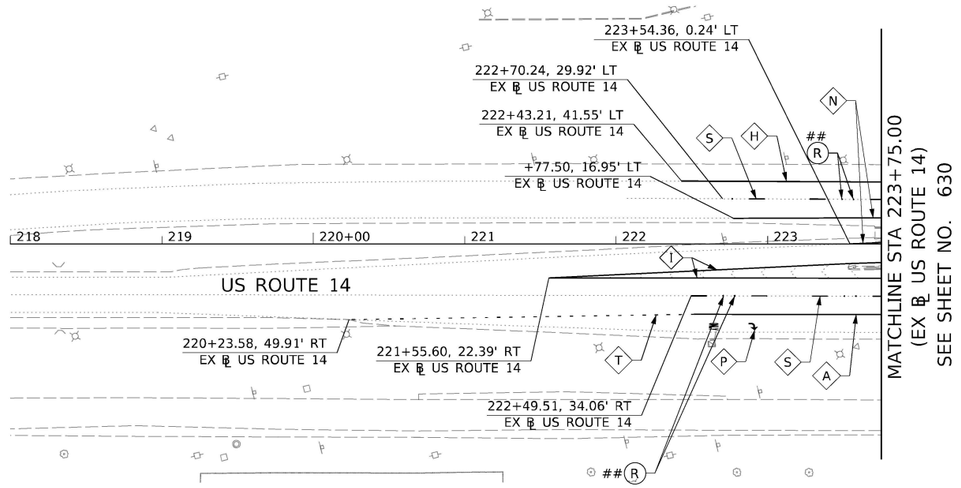

LANE MARKER NOTES:

SEE DISTRICT STANDARD TC-11 FOR LANE MARKER DETAILS.
40' O.C.
80' O.C.

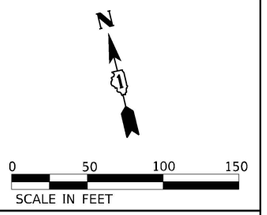

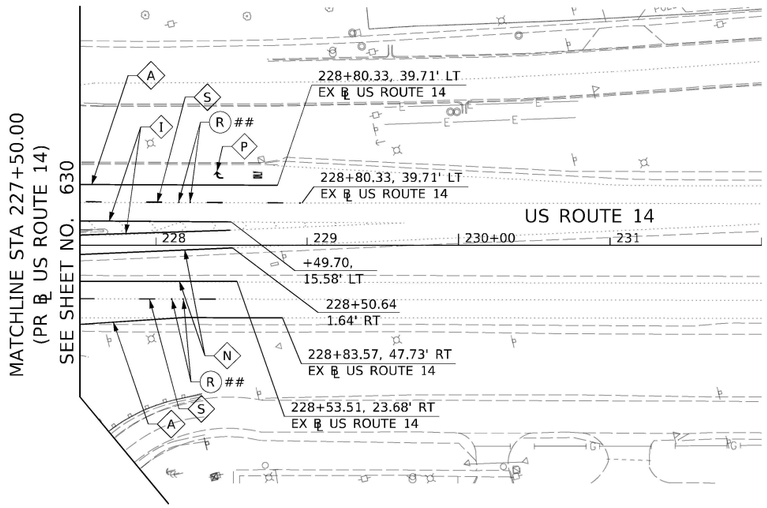

LANE MARKER NOTES:

SEE DISTRICT STANDARD TC-11 FOR LANE MARKER DETAILS.
40' O.C.
80' O.C.

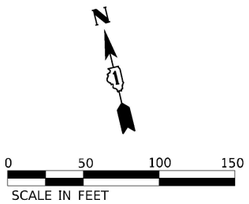

LEGEND:

A - 6" WHITE SOLID
* B - 7" WHITE CONTRAST (10' DASH, 30' SKIP)
C - 12" WHITE SOLID (CROSSWALK)
D - 24" WHITE SOLID (STOP BAR)
E - 4" DOUBLE YELLOW SOLID (AT 11" C-C)
F - 24" WHITE (2' DASH, 2' SKIP)
** G - 9" WHITE CONTRAST (2' DASH, 6' SKIP)
H - 4" WHITE SOLID
I - 8" WHITE SOLID
J - 12" WHITE CHEVRONS
K - 12" YELLOW DIAGONAL (45°, AT 50' C-C)
L - 12" WHITE CROSSWALK (45°, AT 3' C-C)
M - 6" WHITE (3' DASH, 9' SKIP)
N - 4" YELLOW SOLID
O - 4" YELLOW (10' DASH, 30' SKIP)
P - LETTERS AND SYMBOLS, WHITE
Q - 12" WHITE DIAGONAL
R - RAISED REFLECTIVE PAVEMENT MARKER
S - 4" WHITE (10' DASH, 30' SKIP)
T - 6" WHITE (2' DASH, 6' SKIP)
* 7" WHITE CONTRAST (1.5" BLACK, 4" WHITE, 1.5" BLACK)
** 9 WHITE CONTRAST (1.5" BLACK, 6" WHITE, 1.5" BLACK)
⊙ PROPOSED TREE
ADDITIONAL CITY OF WOODSTOCK LANDSCAPE TREES AND SHRUBS SHOWN ON SHEETS 687 TO SLDSCP012

PAVEMENT MARKING MATERIAL:

◇ THERMOPLASTIC PAVEMENT MARKING
△ MODIFIED URETHANE PAVEMENT MARKING
⬡ CONTRAST PREFORMED PLASTIC PAVEMENT MARKING, TYPE D AND GROOVING FOR RECESSED PAVEMENT MARKING

NOTES:

1) ALL DAMAGE TO EXISTING PAVEMENT MARKINGS OR RAISED REFLECTIVE PAVEMENT MARKERS OUTSIDE OF THE IMPROVEMENT LIMITS SHOWN ON THE PLANS SHALL BE REPLACED AT THE CONTRACTOR'S EXPENSE.
2) BEFORE BEGINNING ANY WORK, THE CONTRACTOR SHALL RECORD AND RETAIN ALL EXISTING PAVEMENT MARKINGS AND MARKERS FOR FUTURE REFERENCE. EXACT LOCATIONS OF ALL PAVEMENT MARKINGS SHALL BE DIRECTED BY THE ENGINEER.
3) STATIONS PROVIDED REFER TO PR ℄ IL ROUTE 47 UNLESS OTHERWISE NOTED.
4) PROPOSED TREE LOCATIONS MAY BE ADJUSTED IN THE FIELD DUE TO DRAINAGE AND UTILITIES. CONTRACTOR SHALL CONTRACT THE ROADSIDE DEVELOPMENT UNITY AT (847) 705-4171 ONE WEEK PRIOR TO INSTALLATION TO APPROVE LOCATIONS.

AECOM
303 EAST WACKER DRIVE, SUITE 1400
CHICAGO, IL 60601-5276
PHONE: (312) 373-7700 FAX: (312) 373-6800

USER NAME = muniza	DESIGNED - APA	REVISED -
	DRAWN - KWM	REVISED -
PLOT SCALE = 100.0000 ' / In.	CHECKED - TJW	REVISED -
PLOT DATE = 2/12/2025	DATE - 02/06/2025	REVISED -

STATE OF ILLINOIS
DEPARTMENT OF TRANSPORTATION

IL–47 PAVEMENT MARKING AND LANDSCAPING PLANS

SCALE: 1" = 50' | SHEET 7 OF 15 SHEETS | STA. | TO STA.

F.A.P. RTE.	SECTION	COUNTY	TOTAL SHEETS	SHEET NO.
326	2024-1052-N,C,SW,FL	MCHENRY	941	636
		CONTRACT NO. 62X94		
		ILLINOIS	FED. AID PROJECT	

MODEL: Default
FILE NAME: pw:\\aecom-na-pw.bentley.com:AECOM_DS21_NA_2020\Documents\60632011-IL-47(900-CAD)\10_CAD\03_SHEETS\Civil\D160X17-sht-pmk-058.dgn

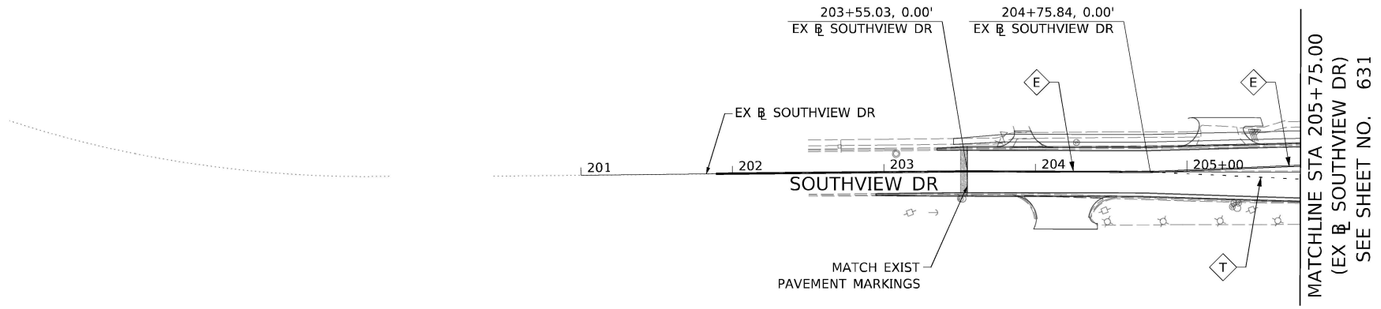

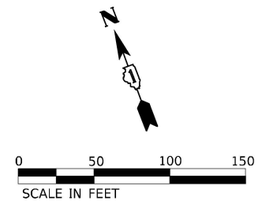

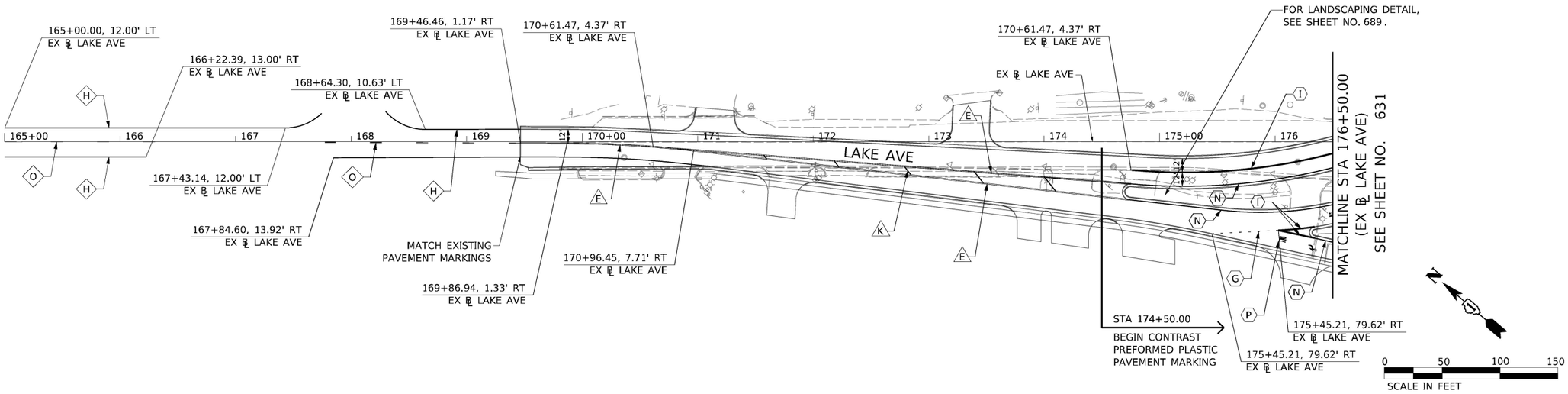

LEGEND:

A - 6" WHITE SOLID
* B - 7" WHITE CONTRAST (10' DASH, 30' SKIP)
C - 12" WHITE SOLID (CROSSWALK)
D - 24" WHITE SOLID (STOP BAR)
E - 4" DOUBLE YELLOW SOLID (AT 11" C-C)
F - 24" WHITE (2' DASH, 2' SKIP)
** G - 9" WHITE CONTRAST (2' DASH, 6' SKIP)
H - 4" WHITE SOLID
I - 8" WHITE SOLID
J - 12" WHITE CHEVRONS
K - 12" YELLOW DIAGONAL (45°, AT 50' C-C)
L - 12" WHITE CROSSWALK (45°, AT 3' C-C)
M - 6" WHITE (3' DASH, 9' SKIP)
N - 4" YELLOW SOLID
O - 4" YELLOW (10' DASH, 30' SKIP)
P - LETTERS AND SYMBOLS, WHITE
Q - 12" WHITE DIAGONAL
R - RAISED REFLECTIVE PAVEMENT MARKER
S - 4" WHITE (10' DASH, 30' SKIP)
T - 6" WHITE (2' DASH, 6' SKIP)
* 7" WHITE CONTRAST (1.5" BLACK, 4" WHITE, 1.5" BLACK)
** 9 WHITE CONTRAST (1.5" BLACK, 6" WHITE, 1.5" BLACK)
⊙ PROPOSED TREE
ADDITIONAL CITY OF WOODSTOCK LANDSCAPE TREES AND SHRUBS SHOWN ON SHEETS 687 TO SLDSCP012

PAVEMENT MARKING MATERIAL:

◇ THERMOPLASTIC PAVEMENT MARKING
△ MODIFIED URETHANE PAVEMENT MARKING
⬡ CONTRAST PREFORMED PLASTIC PAVEMENT MARKING, TYPE D AND GROOVING FOR RECESSED PAVEMENT MARKING

NOTES:

1) ALL DAMAGE TO EXISTING PAVEMENT MARKINGS OR RAISED REFLECTIVE PAVEMENT MARKERS OUTSIDE OF THE IMPROVEMENT LIMITS SHOWN ON THE PLANS SHALL BE REPLACED AT THE CONTRACTOR'S EXPENSE.
2) BEFORE BEGINNING ANY WORK, THE CONTRACTOR SHALL RECORD AND RETAIN ALL EXISTING PAVEMENT MARKINGS AND MARKERS FOR FUTURE REFERENCE. EXACT LOCATIONS OF ALL PAVEMENT MARKINGS SHALL BE DIRECTED BY THE ENGINEER.
3) STATIONS PROVIDED REFER TO PR ℄ IL ROUTE 47 UNLESS OTHERWISE NOTED.
4) PROPOSED TREE LOCATIONS MAY BE ADJUSTED IN THE FIELD DUE TO DRAINAGE AND UTILITIES. CONTRACTOR SHALL CONTRACT THE ROADSIDE DEVELOPMENT UNITY AT (847) 705-4171 ONE WEEK PRIOR TO INSTALLATION TO APPROVE LOCATIONS.

AECOM
303 EAST WACKER DRIVE, SUITE 1400
CHICAGO, IL 60601-5276
PHONE: (312) 373-7700 FAX: (312) 373-6800

USER NAME = muniza	DESIGNED - APA	REVISED -
	DRAWN - KWM	REVISED -
PLOT SCALE = 100.0000 ' / in.	CHECKED - TJW	REVISED -
PLOT DATE = 2/12/2025	DATE - 02/06/2025	REVISED -

STATE OF ILLINOIS
DEPARTMENT OF TRANSPORTATION

IL-47 PAVEMENT MARKING AND LANDSCAPING PLANS

SCALE: 1" = 50' | SHEET 8 OF 15 SHEETS | STA. | TO STA.

F.A.P. RTE.	SECTION	COUNTY	TOTAL SHEETS	SHEET NO.
326	2024-1052-N,C,SW,FL	MCHENRY	941	637
		CONTRACT NO. 62X94		
		ILLINOIS	FED. AID PROJECT	

MODEL: Default
FILE NAME: pw:\\aecom-na-pw.bentley.com:AECOM_D521_NA_2020\Documents\60632011-IL-47\900-CAD\910-CAD\03_SHEETS\Civil\D160X17-sht-gmk-006.dgn

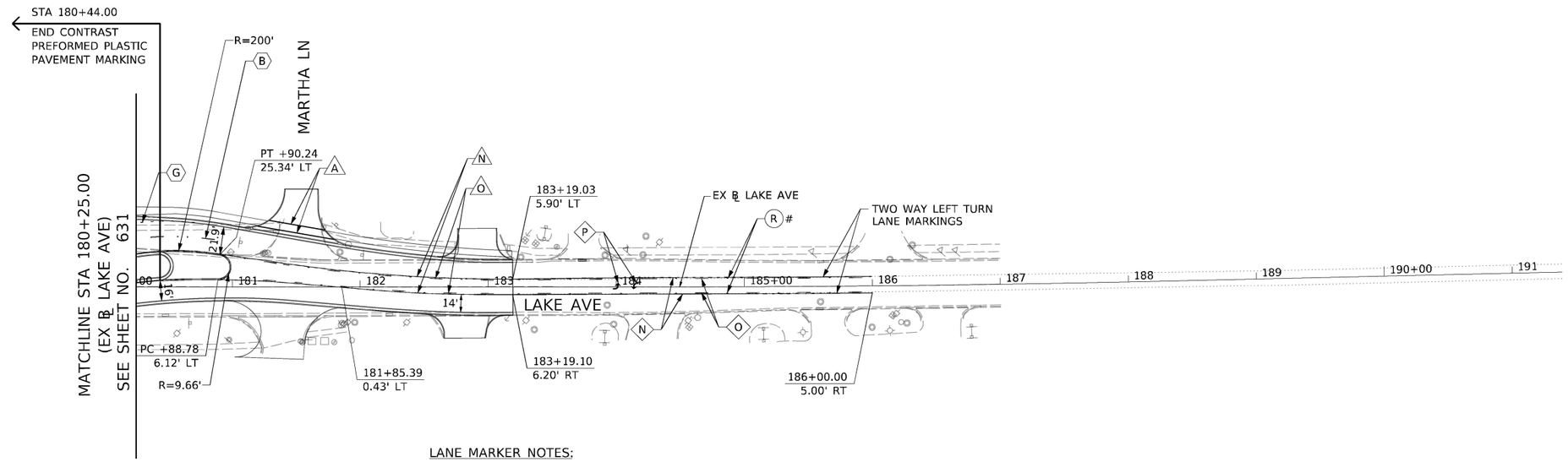

LANE MARKER NOTES:

SEE DISTRICT STANDARD TC-11 FOR LANE MARKER DETAILS.
40' O.C.
80' O.C.

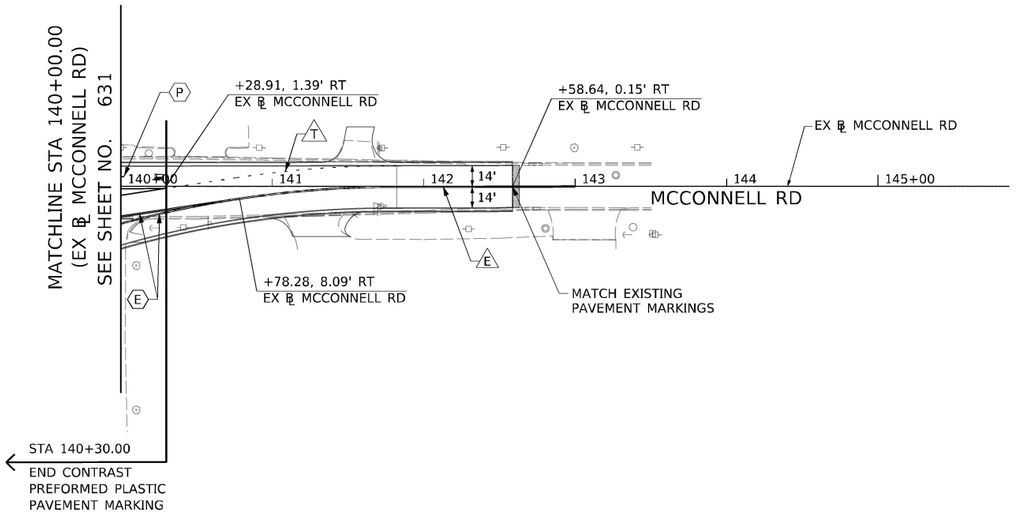

LEGEND:

- A - 6" WHITE SOLID
- * B - 7" WHITE CONTRAST (10' DASH, 30' SKIP)
- C - 12" WHITE SOLID (CROSSWALK)
- D - 24" WHITE SOLID (STOP BAR)
- E - 4" DOUBLE YELLOW SOLID (AT 11" C-C)
- F - 24" WHITE (2' DASH, 2' SKIP)
- ** G - 9" WHITE CONTRAST (2' DASH, 6' SKIP)
- H - 4" WHITE SOLID
- I - 8" WHITE SOLID
- J - 12" WHITE CHEVRONS
- K - 12" YELLOW DIAGONAL (45°, AT 50' C-C)
- L - 12" WHITE CROSSWALK (45°, AT 3' C-C)
- M - 6" WHITE (3' DASH, 9' SKIP)
- N - 4" YELLOW SOLID
- O - 4" YELLOW (10' DASH, 30' SKIP)
- P - LETTERS AND SYMBOLS, WHITE
- Q - 12" WHITE DIAGONAL
- R - RAISED REFLECTIVE PAVEMENT MARKER
- S - 4" WHITE (10' DASH, 30' SKIP)
- T - 6" WHITE (2' DASH, 6' SKIP)
- * 7" WHITE CONTRAST (1.5" BLACK, 4" WHITE, 1.5" BLACK)
- ** 9 WHITE CONTRAST (1.5" BLACK, 6" WHITE, 1.5" BLACK)
- ⊙ PROPOSED TREE

ADDITIONAL CITY OF WOODSTOCK LANDSCAPE TREES AND SHRUBS SHOWN ON SHEETS 687 TO sLDSCP012

PAVEMENT MARKING MATERIAL:

- ◇ THERMOPLASTIC PAVEMENT MARKING
- △ MODIFIED URETHANE PAVEMENT MARKING
- ⬡ CONTRAST PREFORMED PLASTIC PAVEMENT MARKING, TYPE D AND GROOVING FOR RECESSED PAVEMENT MARKING

NOTES:

1) ALL DAMAGE TO EXISTING PAVEMENT MARKINGS OR RAISED REFLECTIVE PAVEMENT MARKERS OUTSIDE OF THE IMPROVEMENT LIMITS SHOWN ON THE PLANS SHALL BE REPLACED AT THE CONTRACTOR'S EXPENSE.
2) BEFORE BEGINNING ANY WORK, THE CONTRACTOR SHALL RECORD AND RETAIN ALL EXISTING PAVEMENT MARKINGS AND MARKERS FOR FUTURE REFERENCE. EXACT LOCATIONS OF ALL PAVEMENT MARKINGS SHALL BE DIRECTED BY THE ENGINEER.
3) STATIONS PROVIDED REFER TO PR ℄ IL ROUTE 47 UNLESS OTHERWISE NOTED.
4) PROPOSED TREE LOCATIONS MAY BE ADJUSTED IN THE FIELD DUE TO DRAINAGE AND UTILITIES. CONTRACTOR SHALL CONTACT THE ROADSIDE DEVELOPMENT UNITY AT (847) 705-4171 ONE WEEK PRIOR TO INSTALLATION TO APPROVE LOCATIONS.

AECOM
303 EAST WACKER DRIVE, SUITE 1400
CHICAGO, IL 60601-5276
PHONE: (312) 373-7700 FAX: (312) 373-6800

USER NAME = muniza	DESIGNED - APA	REVISED -
	DRAWN - KWM	REVISED -
PLOT SCALE = 100.0000 ' / in.	CHECKED - TJW	REVISED -
PLOT DATE = 2/12/2025	DATE - 02/06/2025	REVISED -

STATE OF ILLINOIS
DEPARTMENT OF TRANSPORTATION

IL-47 PAVEMENT MARKING AND LANDSCAPING PLANS

SCALE: 1" = 50' | SHEET 9 OF 15 SHEETS | STA. | TO STA.

F.A.P. RTE.	SECTION	COUNTY	TOTAL SHEETS	SHEET NO.
326	2024-1052-N,C,SW,FL	MCHENRY	941	638
		CONTRACT NO. 62X94		
		ILLINOIS	FED. AID PROJECT	

MODEL: Default
FILE NAME: pw:\\aecom-na-pw.bentley.com:AECOM_DS21_NA_2020\Documents\60632011-IL-471900-CAD910_CAD\03_SHEETS\CivilD160X17-sht-pmk-07.dgn

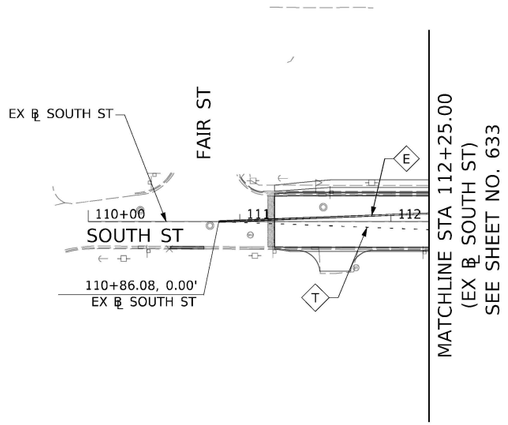

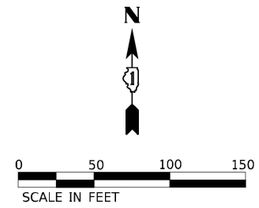

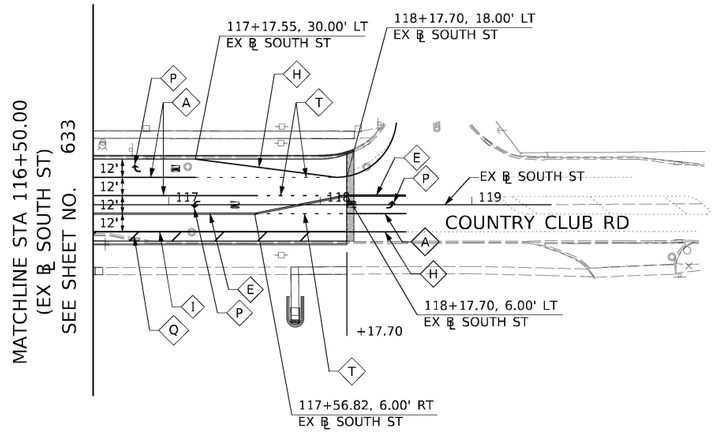

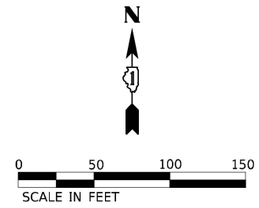

LEGEND:

A - 6" WHITE SOLID
* B - 7" WHITE CONTRAST (10' DASH, 30' SKIP)
C - 12" WHITE SOLID (CROSSWALK)
D - 24" WHITE SOLID (STOP BAR)
E - 4" DOUBLE YELLOW SOLID (AT 11" C-C)
F - 24" WHITE (2' DASH, 2' SKIP)
** G - 9" WHITE CONTRAST (2' DASH, 6' SKIP)
H - 4" WHITE SOLID
I - 8" WHITE SOLID
J - 12" WHITE CHEVRONS
K - 12" YELLOW DIAGONAL (45°, AT 50' C-C)
L - 12" WHITE CROSSWALK (45°, AT 3' C-C)
M - 6" WHITE (3' DASH, 9' SKIP)
N - 4" YELLOW SOLID
O - 4" YELLOW (10' DASH, 30' SKIP)
P - LETTERS AND SYMBOLS, WHITE
Q - 12" WHITE DIAGONAL
R - RAISED REFLECTIVE PAVEMENT MARKER
S - 4" WHITE (10' DASH, 30' SKIP)
T - 6" WHITE (2' DASH, 6' SKIP)
* 7" WHITE CONTRAST (1.5" BLACK, 4" WHITE, 1.5" BLACK)
** 9 WHITE CONTRAST (1.5" BLACK, 6" WHITE, 1.5" BLACK)
⊙ PROPOSED TREE
ADDITIONAL CITY OF WOODSTOCK LANDSCAPE TREES AND SHRUBS SHOWN ON SHEETS 687 TO sLDSCP012

PAVEMENT MARKING MATERIAL:

◇ THERMOPLASTIC PAVEMENT MARKING

△ MODIFIED URETHANE PAVEMENT MARKING

⬡ CONTRAST PREFORMED PLASTIC PAVEMENT MARKING, TYPE D AND GROOVING FOR RECESSED PAVEMENT MARKING

NOTES:

1) ALL DAMAGE TO EXISTING PAVEMENT MARKINGS OR RAISED REFLECTIVE PAVEMENT MARKERS OUTSIDE OF THE IMPROVEMENT LIMITS SHOWN ON THE PLANS SHALL BE REPLACED AT THE CONTRACTOR'S EXPENSE.
2) BEFORE BEGINNING ANY WORK, THE CONTRACTOR SHALL RECORD AND RETAIN ALL EXISTING PAVEMENT MARKINGS AND MARKERS FOR FUTURE REFERENCE. EXACT LOCATIONS OF ALL PAVEMENT MARKINGS SHALL BE DIRECTED BY THE ENGINEER.
3) STATIONS PROVIDED REFER TO PR ℄ IL ROUTE 47 UNLESS OTHERWISE NOTED.
4) PROPOSED TREE LOCATIONS MAY BE ADJUSTED IN THE FIELD DUE TO DRAINAGE AND UTILITIES. CONTRACTOR SHALL CONTRACT THE ROADSIDE DEVELOPMENT UNITY AT (847) 705-4171 ONE WEEK PRIOR TO INSTALLATION TO APPROVE LOCATIONS.

AECOM
303 EAST WACKER DRIVE, SUITE 1400
CHICAGO, IL 60601-5276
PHONE: (312) 373-7700 FAX: (312) 373-6800

USER NAME = muniza	DESIGNED - APA	REVISED -
	DRAWN - KWM	REVISED -
PLOT SCALE = 100.0000 ' / in.	CHECKED - TJW	REVISED -
PLOT DATE = 2/12/2025	DATE - 02/06/2025	REVISED -

STATE OF ILLINOIS
DEPARTMENT OF TRANSPORTATION

IL-47 PAVEMENT MARKING AND LANDSCAPING PLANS

SCALE: 1" = 50' | SHEET 10 OF 15 SHEETS | STA. | TO STA.

F.A.P. RTE.	SECTION	COUNTY	TOTAL SHEETS	SHEET NO.
326	2024-1052-N,C,SW,FL	MCHENRY	941	639
		CONTRACT NO. 62X94		
		ILLINOIS	FED. AID PROJECT	

MODEL: Default
FILE NAME: pw:\\aecom-na-pw.bentley.com:AECOM_D521_NA_2020\Documents\60632011-IL-47\900-CAD\910_CAD\03_SHEETS\Civil\D160X17-sht-gmk-08.dgn

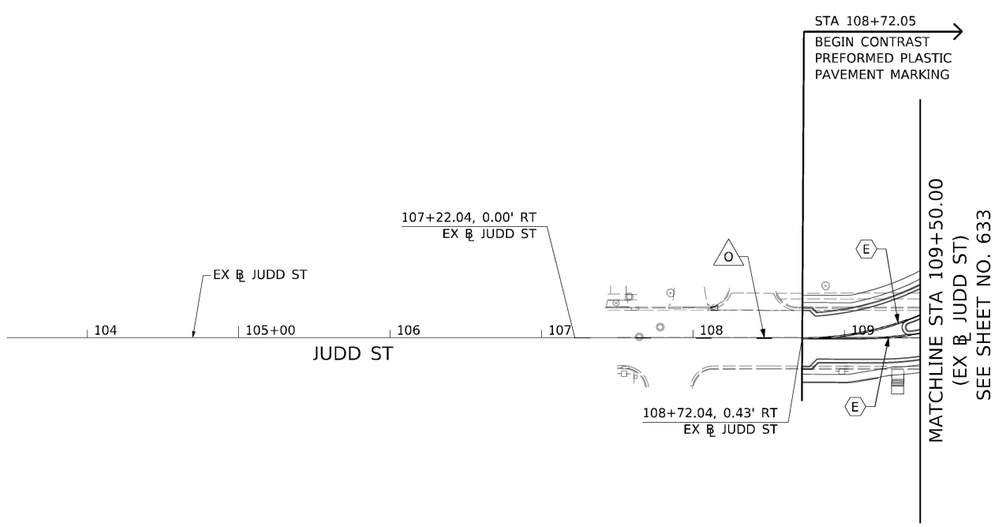



LANE MARKER NOTES:

SEE DISTRICT STANDARD TC-11 FOR LANE MARKER DETAILS.
\# 40' O.C.
\## 80' O.C.

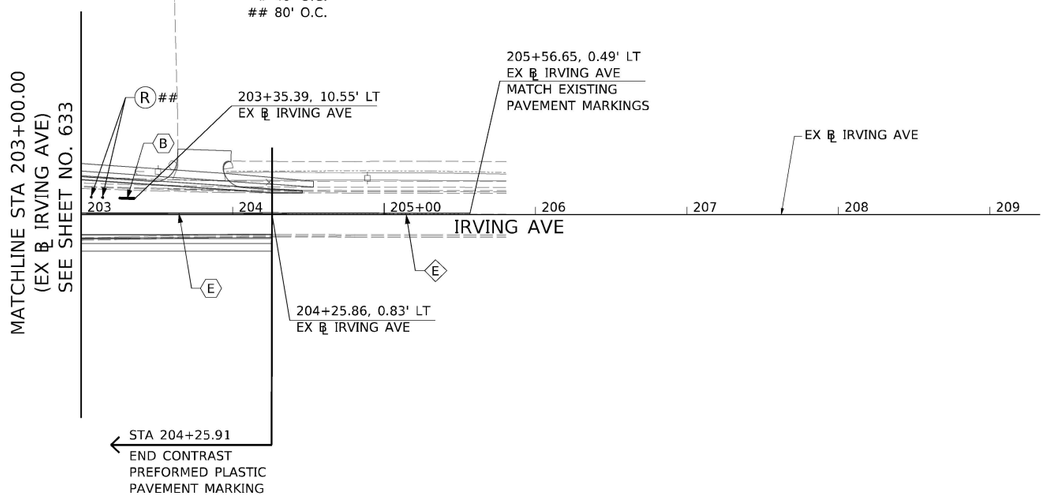

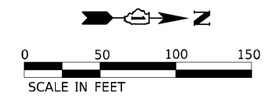

LEGEND:

A - 6" WHITE SOLID
* B - 7" WHITE CONTRAST (10' DASH, 30' SKIP)
C - 12" WHITE SOLID (CROSSWALK)
D - 24" WHITE SOLID (STOP BAR)
E - 4" DOUBLE YELLOW SOLID (AT 11" C-C)
F - 24" WHITE (2' DASH, 2' SKIP)
** G - 9" WHITE CONTRAST (2' DASH, 6' SKIP)
H - 4" WHITE SOLID
I - 8" WHITE SOLID
J - 12" WHITE CHEVRONS
K - 12" YELLOW DIAGONAL (45°, AT 50' C-C)
L - 12" WHITE CROSSWALK (45°, AT 3' C-C)
M - 6" WHITE (3' DASH, 9' SKIP)
N - 4" YELLOW SOLID
O - 4" YELLOW (10' DASH, 30' SKIP)
P - LETTERS AND SYMBOLS, WHITE
Q - 12" WHITE DIAGONAL
R - RAISED REFLECTIVE PAVEMENT MARKER
S - 4" WHITE (10' DASH, 30' SKIP)
T - 6" WHITE (2' DASH, 6' SKIP)
* 7" WHITE CONTRAST (1.5" BLACK, 4" WHITE, 1.5" BLACK)
** 9 WHITE CONTRAST (1.5" BLACK, 6" WHITE, 1.5" BLACK)
⊙ PROPOSED TREE
ADDITIONAL CITY OF WOODSTOCK LANDSCAPE TREES AND SHRUBS SHOWN ON SHEETS 687 TO SLDSCP012

PAVEMENT MARKING MATERIAL:

◇ THERMOPLASTIC PAVEMENT MARKING

△ MODIFIED URETHANE PAVEMENT MARKING

⬡ CONTRAST PREFORMED PLASTIC PAVEMENT MARKING, TYPE D AND GROOVING FOR RECESSED PAVEMENT MARKING

NOTES:

1) ALL DAMAGE TO EXISTING PAVEMENT MARKINGS OR RAISED REFLECTIVE PAVEMENT MARKERS OUTSIDE OF THE IMPROVEMENT LIMITS SHOWN ON THE PLANS SHALL BE REPLACED AT THE CONTRACTOR'S EXPENSE.
2) BEFORE BEGINNING ANY WORK, THE CONTRACTOR SHALL RECORD AND RETAIN ALL EXISTING PAVEMENT MARKINGS AND MARKERS FOR FUTURE REFERENCE. EXACT LOCATIONS OF ALL PAVEMENT MARKINGS SHALL BE DIRECTED BY THE ENGINEER.
3) STATIONS PROVIDED REFER TO PR ℄ IL ROUTE 47 UNLESS OTHERWISE NOTED.
4) PROPOSED TREE LOCATIONS MAY BE ADJUSTED IN THE FIELD DUE TO DRAINAGE AND UTILITIES. CONTRACTOR SHALL CONTRACT THE ROADSIDE DEVELOPMENT UNITY AT (847) 705-4171 ONE WEEK PRIOR TO INSTALLATION TO APPROVE LOCATIONS.

AECOM
303 EAST WACKER DRIVE, SUITE 1400
CHICAGO, IL 60601-5276
PHONE: (312) 373-7700 FAX: (312) 373-6800

USER NAME = muniza	DESIGNED - APA	REVISED -
	DRAWN - KWM	REVISED -
PLOT SCALE = 100.0000 ' / in.	CHECKED - TJW	REVISED -
PLOT DATE = 2/12/2025	DATE - 02/06/2025	REVISED -

STATE OF ILLINOIS
DEPARTMENT OF TRANSPORTATION

IL-47 PAVEMENT MARKING AND LANDSCAPING PLANS

SCALE: 1" = 50' | SHEET 11 OF 15 SHEETS | STA. | TO STA.

F.A.P. RTE.	SECTION	COUNTY	TOTAL SHEETS	SHEET NO.
326	2024-1052-N,C,SW,FL	MCHENRY	941	640
		CONTRACT NO. 62X94		
		ILLINOIS	FED. AID PROJECT	

MODEL: Default
FILE NAME: pw:\\aecom-na-pw.bentley.com:AECOM_0521_NA_2020\Documents\60632011-IL-47\900-CAD\910_CAD\03_SHEETS\Civil\D160X17-sht-pmk-09.dgn

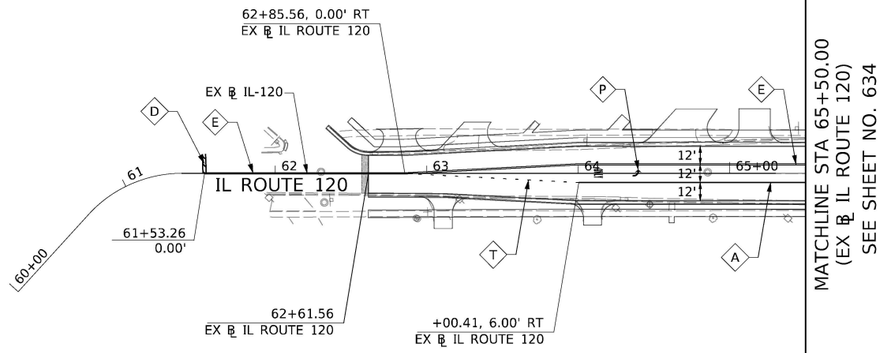

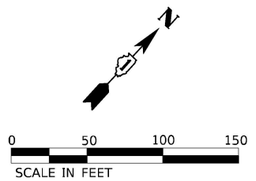

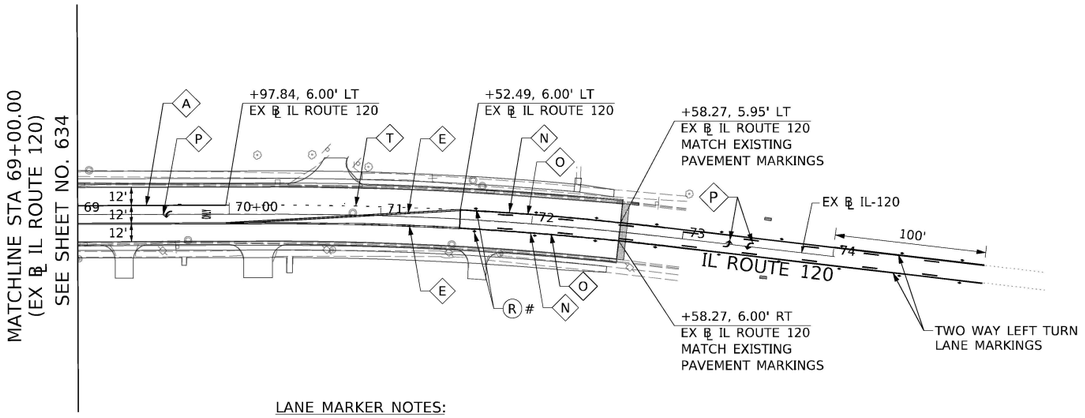

LANE MARKER NOTES:

SEE DISTRICT STANDARD TC-11 FOR LANE MARKER DETAILS.
40' O.C.
80' O.C.

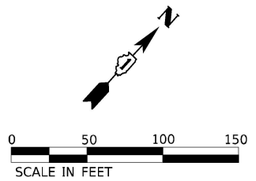

LEGEND:

A - 6" WHITE SOLID
* B - 7" WHITE CONTRAST (10' DASH, 30' SKIP)
C - 12" WHITE SOLID (CROSSWALK)
D - 24" WHITE SOLID (STOP BAR)
E - 4" DOUBLE YELLOW SOLID (AT 11" C-C)
F - 24" WHITE (2' DASH, 2' SKIP)
** G - 9" WHITE CONTRAST (2' DASH, 6' SKIP)
H - 4" WHITE SOLID
I - 8" WHITE SOLID
J - 12" WHITE CHEVRONS
K - 12" YELLOW DIAGONAL (45°, AT 50' C-C)
L - 12" WHITE CROSSWALK (45°, AT 3' C-C)
M - 6" WHITE (3' DASH, 9' SKIP)
N - 4" YELLOW SOLID
O - 4" YELLOW (10' DASH, 30' SKIP)
P - LETTERS AND SYMBOLS, WHITE
Q - 12" WHITE DIAGONAL
R - RAISED REFLECTIVE PAVEMENT MARKER
S - 4" WHITE (10' DASH, 30' SKIP)
T - 6" WHITE (2' DASH, 6' SKIP)
* 7" WHITE CONTRAST (1.5" BLACK, 4" WHITE, 1.5" BLACK)
** 9 WHITE CONTRAST (1.5" BLACK, 6" WHITE, 1.5" BLACK)
⊙ PROPOSED TREE
ADDITIONAL CITY OF WOODSTOCK LANDSCAPE TREES AND SHRUBS SHOWN ON SHEETS 687 TO sLDSCP012

PAVEMENT MARKING MATERIAL:

◇ THERMOPLASTIC PAVEMENT MARKING

△ MODIFIED URETHANE PAVEMENT MARKING

⬡ CONTRAST PREFORMED PLASTIC PAVEMENT MARKING, TYPE D AND GROOVING FOR RECESSED PAVEMENT MARKING

NOTES:

1) ALL DAMAGE TO EXISTING PAVEMENT MARKINGS OR RAISED REFLECTIVE PAVEMENT MARKERS OUTSIDE OF THE IMPROVEMENT LIMITS SHOWN ON THE PLANS SHALL BE REPLACED AT THE CONTRACTOR'S EXPENSE.

2) BEFORE BEGINNING ANY WORK, THE CONTRACTOR SHALL RECORD AND RETAIN ALL EXISTING PAVEMENT MARKINGS AND MARKERS FOR FUTURE REFERENCE. EXACT LOCATIONS OF ALL PAVEMENT MARKINGS SHALL BE DIRECTED BY THE ENGINEER.

3) STATIONS PROVIDED REFER TO PR ℄ IL ROUTE 47 UNLESS OTHERWISE NOTED.

4) PROPOSED TREE LOCATIONS MAY BE ADJUSTED IN THE FIELD DUE TO DRAINAGE AND UTILITIES. CONTRACTOR SHALL CONTRACT THE ROADSIDE DEVELOPMENT UNITY AT (847) 705-4171 ONE WEEK PRIOR TO INSTALLATION TO APPROVE LOCATIONS.

AECOM
303 EAST WACKER DRIVE, SUITE 1400
CHICAGO, IL 60601-5276
PHONE: (312) 373-7700 FAX: (312) 373-6800

USER NAME = muniza	DESIGNED - APA	REVISED -
	DRAWN - KWM	REVISED -
PLOT SCALE = 100.0000 ' / in.	CHECKED - TJW	REVISED -
PLOT DATE = 2/12/2025	DATE - 02/06/2025	REVISED -

STATE OF ILLINOIS
DEPARTMENT OF TRANSPORTATION

IL-47 PAVEMENT MARKING AND LANDSCAPING PLANS

SCALE: 1" = 50' | SHEET 12 OF 15 SHEETS | STA. | TO STA.

F.A.P. RTE.	SECTION	COUNTY	TOTAL SHEETS	SHEET NO.
326	2024-1052-N,C,SW,FL	MCHENRY	941	641
		CONTRACT NO. 62X94		
		ILLINOIS	FED. AID PROJECT	

MODEL: Default
FILE NAME: pw:\\aecom-na-pw.bentley.com:AECOM_D521_NA_2020\Documents\60632011-IL-47\900-CAD\910_CAD\03_SHEETS\Civil\D160X17-sht-gmk-10.dgn

LEGEND:

A - 6" WHITE SOLID
B - 7" WHITE CONTRAST (10' DASH, 30' SKIP)
C - 12" WHITE SOLID (CROSSWALK)
D - 24" WHITE SOLID (STOP BAR)
E - 4" DOUBLE YELLOW SOLID (AT 11" C-C)
F - 27" WHITE CONTRAST (2' DASH, 2' SKIP)
G - 9" WHITE CONTRAST (2' DASH, 6' SKIP)
H - 7" WHITE CONTRAST SOLID
I - 11" WHITE CONTRAST SOLID
J - 15" WHITE CONTRAST CHEVRONS
K - 12" YELLOW DIAGONAL (45°, AT 50' C-C)
L - 12" WHITE CROSSWALK (45°, AT 3' C-C)
M - 6" WHITE (3' DASH, 9' SKIP)
N - 7" YELLOW CONTRAST SOLID
O - 4" YELLOW (10' DASH, 30' SKIP)
P - WHITE CONTRAST LETTERS AND SYMBOLS
Q - 15" WHITE CONTRAST DIAGONAL
R - RAISED REFLECTIVE PAVEMENT MARKER
S - 4" WHITE (10' DASH, 30' SKIP)
T - 6" WHITE (2' DASH, 6' SKIP)

NOTES:

1. SEE BELOW FOR CONTRAST PAVEMENT MARKING INFORMATION AND ALSO SEE DISTRICT 1 TC-12 FOR DETAILS.

7" WHITE CONTRAST PREFORMED PAVEMENT MARKING LINE, TYPE D
(1.5" BLACK, 4" WHITE/YELLOW, 1.5" BLACK) USE WITH
GROOVING FOR RECESSED PAVEMENT MARKING 8"

9" WHITE CONTRAST PREFORMED PAVEMENT MARKING LINE, TYPE D
(1.5" BLACK, 6" WHITE, 1.5" BLACK) USE WITH
GROOVING FOR RECESSED PAVEMENT MARKING 10"

11" WHITE CONTRAST PREFORMED PAVEMENT MARKING LINE, TYPE D
(1.5" BLACK, 8" WHITE, 1.5" BLACK) USE WITH
GROOVING FOR RECESSED PAVEMENT MARKING 12"

15" WHITE CONTRAST PREFORMED PAVEMENT MARKING LINE, TYPE D
(1.5" BLACK, 12" WHITE, 1.5" BLACK) USE WITH
GROOVING FOR RECESSED PAVEMENT MARKING 16"

27" WHITE CONTRAST PREFORMED PAVEMENT MARKING LINE, TYPE D
(1.5" BLACK, 24" WHITE, 1.5" BLACK) USE WITH
GROOVING FOR RECESSED PAVEMENT MARKING 28"

WHITE CONTRAST LETTERS AND SYMBOLS USE WITH
GROOVING FOR RECESSED PAVEMENT MARKING, LETTERS AND SYMBOLS

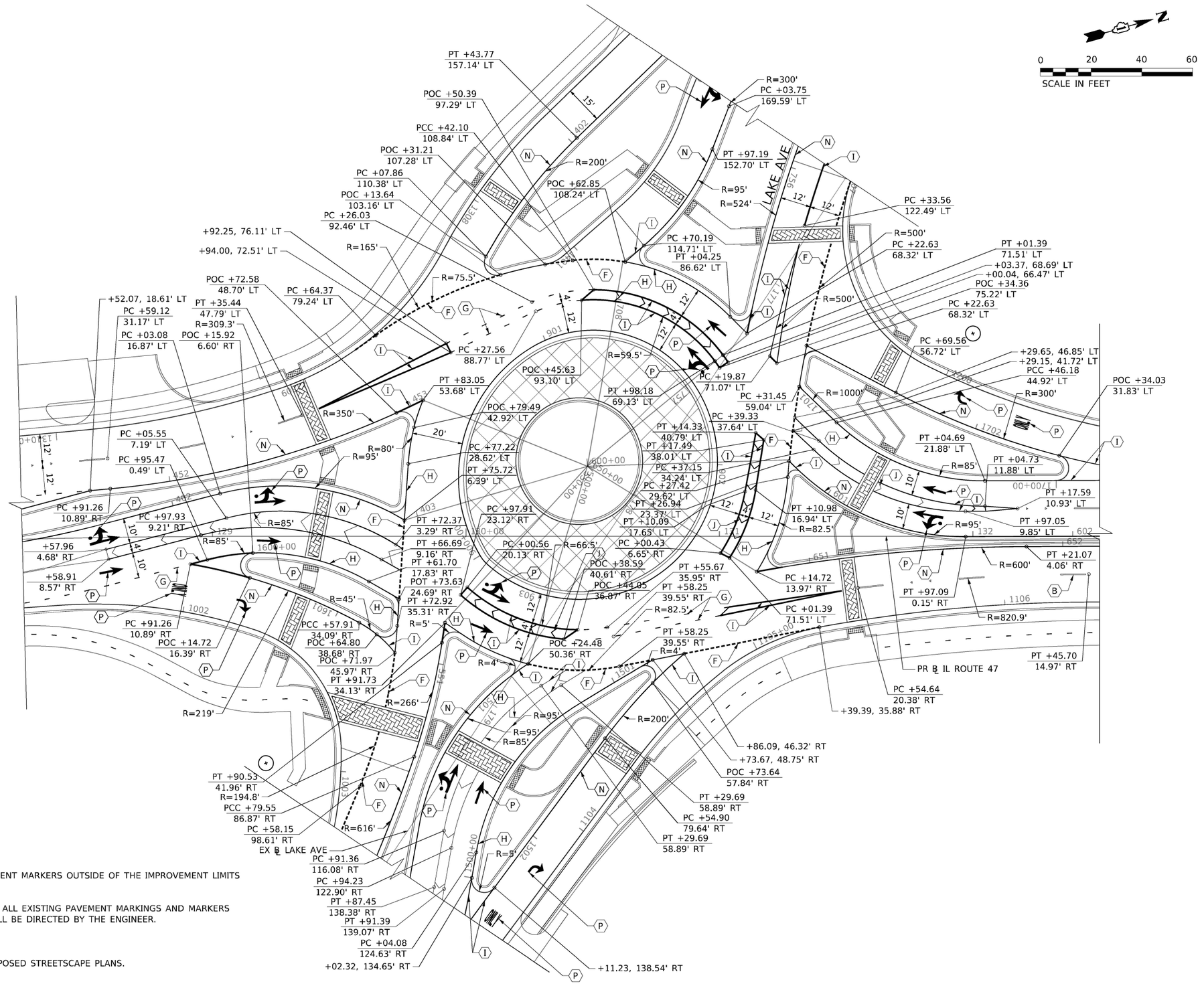

PAVEMENT MARKING MATERIAL:

◇ THERMOPLASTIC PAVEMENT MARKING

△ MODIFIED URETHANE PAVEMENT MARKING

⬡ CONTRAST PREFORMED PLASTIC PAVEMENT MARKING, TYPE D AND GROOVING FOR RECESSED PAVEMENT MARKING

NOTES:

1) ALL DAMAGE TO EXISTING PAVEMENT MARKINGS OR RAISED REFLECTIVE PAVEMENT MARKERS OUTSIDE OF THE IMPROVEMENT LIMITS SHOWN ON THE PLANS SHALL BE REPLACED AT THE CONTRACTOR'S EXPENSE.

2) BEFORE BEGINNING ANY WORK, THE CONTRACTOR SHALL RECORD AND RETAIN ALL EXISTING PAVEMENT MARKINGS AND MARKERS FOR FUTURE REFERENCE. EXACT LOCATIONS OF ALL PAVEMENT MARKINGS SHALL BE DIRECTED BY THE ENGINEER.

3) STATIONS PROVIDED REFER TO PR ℄ IL ROUTE 47 UNLESS OTHERWISE NOTED.

4) FOR LANDSCAPING AND CROSSWALK DETAILS AT THE ROUNDABOUTS, SEE PROPOSED STREETSCAPE PLANS.

AECOM
303 EAST WACKER DRIVE, SUITE 1400
CHICAGO, IL 60601-5276
PHONE: (312) 373-7700 FAX: (312) 373-6800

USER NAME = muniza	DESIGNED - APA	REVISED -	
	DRAWN - KWM	REVISED -	
PLOT SCALE = 40.0000 ' / in.	CHECKED - TJW	REVISED -	
PLOT DATE = 2/12/2025	DATE - 02/06/2025	REVISED -	

STATE OF ILLINOIS
DEPARTMENT OF TRANSPORTATION

IL-47 PAVEMENT MARKING AND LANDSCAPING PLANS

SCALE: 1"= 20' | SHEET 13 OF 15 SHEETS | STA. | TO STA.

F.A.P. RTE.	SECTION	COUNTY	TOTAL SHEETS	SHEET NO.
326	2024-1052-N,C,SW,FL	MCHENRY	941	642
		CONTRACT NO. 62X94		
	ILLINOIS FED. AID PROJECT			

MODEL: Default
FILE NAME: pw:\\aecom-na-pw.bentley.com:AECOM_0521_NA_2020\Documents\60632011-IL-47\900-CAD\910_CAD\03_SHEETS\Civil\D160X17-sht-pmk-11.dgn

LEGEND:

A - 6" WHITE SOLID
B - 7" WHITE CONTRAST (10' DASH, 30' SKIP)
C - 12" WHITE SOLID (CROSSWALK)
D - 24" WHITE SOLID (STOP BAR)
E - 4" DOUBLE YELLOW SOLID (AT 11" C-C)
F - 27" WHITE CONTRAST (2' DASH, 2' SKIP)
G - 9" WHITE CONTRAST (2' DASH, 6' SKIP)
H - 7" WHITE CONTRAST SOLID
I - 11" WHITE CONTRAST SOLID
J - 15" WHITE CONTRAST CHEVRONS
K - 12" YELLOW DIAGONAL (45°, AT 50' C-C)
L - 12" WHITE CROSSWALK (45°, AT 3' C-C)
M - 6" WHITE (3' DASH, 9' SKIP)
N - 7" YELLOW CONTRAST SOLID
O - 4" YELLOW (10' DASH, 30' SKIP)
P - WHITE CONTRAST LETTERS AND SYMBOLS
Q - 15" WHITE CONTRAST DIAGONAL
R - RAISED REFLECTIVE PAVEMENT MARKER
S - 4" WHITE (10' DASH, 30' SKIP)
T - 6" WHITE (2' DASH, 6' SKIP)

NOTES:

1. SEE BELOW FOR CONTRAST PAVEMENT MARKING INFORMATION AND ALSO SEE DISTRICT 1 TC-12 FOR DETAILS.

7" WHITE CONTRAST PREFORMED PAVEMENT MARKING LINE, TYPE D
(1.5" BLACK, 4" WHITE/YELLOW, 1.5" BLACK) USE WITH
GROOVING FOR RECESSED PAVEMENT MARKING 8"

9" WHITE CONTRAST PREFORMED PAVEMENT MARKING LINE, TYPE D
(1.5" BLACK, 6" WHITE, 1.5" BLACK) USE WITH
GROOVING FOR RECESSED PAVEMENT MARKING 10"

11" WHITE CONTRAST PREFORMED PAVEMENT MARKING LINE, TYPE D
(1.5" BLACK, 8" WHITE, 1.5" BLACK) USE WITH
GROOVING FOR RECESSED PAVEMENT MARKING 12"

15" WHITE CONTRAST PREFORMED PAVEMENT MARKING LINE, TYPE D
(1.5" BLACK, 12" WHITE, 1.5" BLACK) USE WITH
GROOVING FOR RECESSED PAVEMENT MARKING 16"

27" WHITE CONTRAST PREFORMED PAVEMENT MARKING LINE, TYPE D
(1.5" BLACK, 24" WHITE, 1.5" BLACK) USE WITH
GROOVING FOR RECESSED PAVEMENT MARKING 28"

WHITE CONTRAST LETTERS AND SYMBOLS USE WITH
GROOVING FOR RECESSED PAVEMENT MARKING, LETTERS AND SYMBOLS

PAVEMENT MARKING MATERIAL:

◇ THERMOPLASTIC PAVEMENT MARKING

△ MODIFIED URETHANE PAVEMENT MARKING

⬡ CONTRAST PREFORMED PLASTIC PAVEMENT MARKING, TYPE D
AND GROOVING FOR RECESSED PAVEMENT MARKING

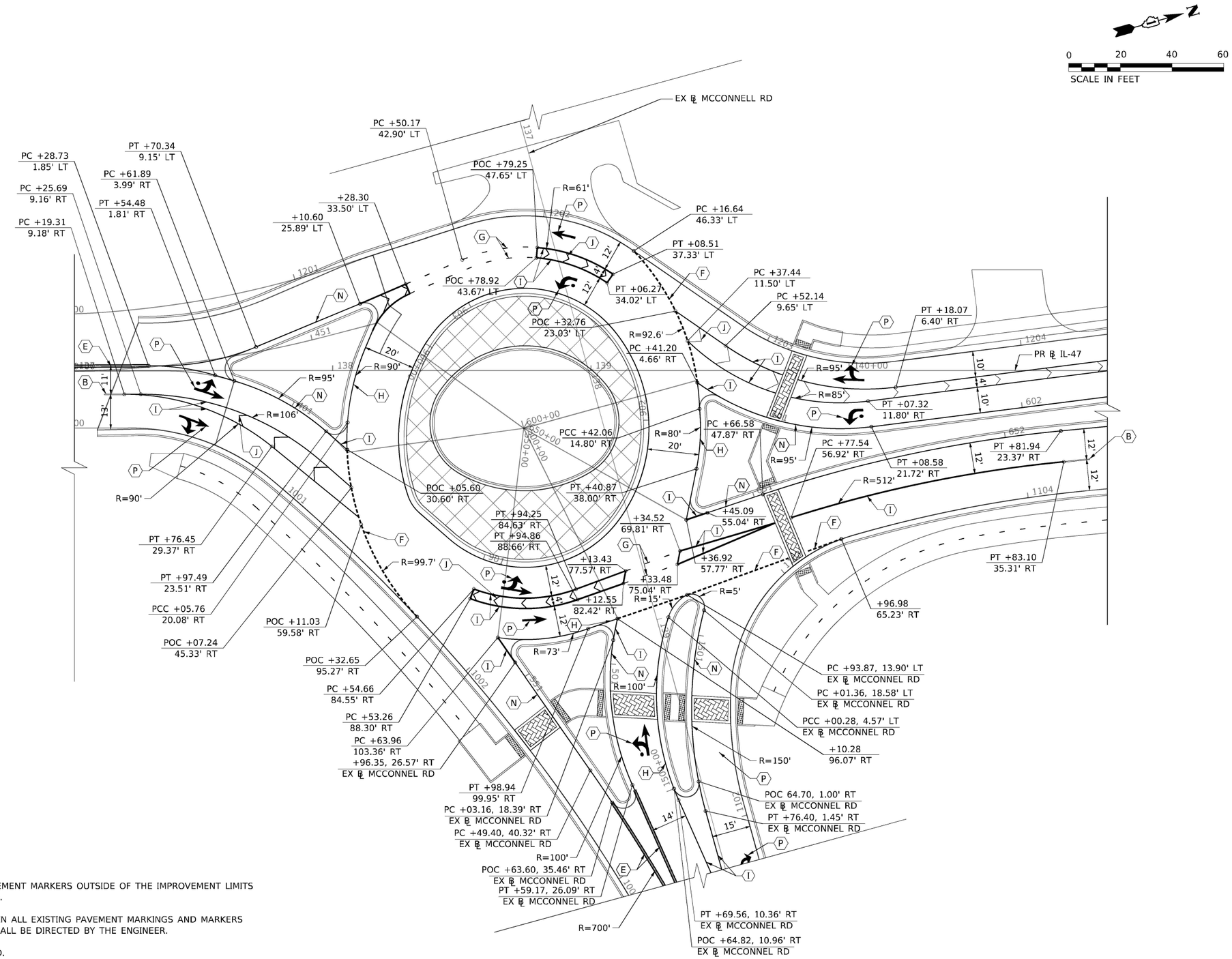

NOTES:

1) ALL DAMAGE TO EXISTING PAVEMENT MARKINGS OR RAISED REFLECTIVE PAVEMENT MARKERS OUTSIDE OF THE IMPROVEMENT LIMITS SHOWN ON THE PLANS SHALL BE REPLACED AT THE CONTRACTOR'S EXPENSE.

2) BEFORE BEGINNING ANY WORK, THE CONTRACTOR SHALL RECORD AND RETAIN ALL EXISTING PAVEMENT MARKINGS AND MARKERS FOR FUTURE REFERENCE. EXACT LOCATIONS OF ALL PAVEMENT MARKINGS SHALL BE DIRECTED BY THE ENGINEER.

3) STATIONS PROVIDED REFER TO PR ℄ IL ROUTE 47 UNLESS OTHERWISE NOTED.

4) FOR LANDSCAPING AND CROSSWALK DETAILS AT THE ROUNDABOUTS, SEE PROPOSED STREETSCAPE PLANS.

AECOM
303 EAST WACKER DRIVE, SUITE 1400
CHICAGO, IL 60601-5276
PHONE: (312) 373-7700 FAX: (312) 373-6800

USER NAME = muniza	DESIGNED - APA	REVISED -	
	DRAWN - KWM	REVISED -	
PLOT SCALE = 40.0000 ' / in.	CHECKED - TJW	REVISED -	
PLOT DATE = 2/12/2025	DATE - 02/06/2025	REVISED -	

STATE OF ILLINOIS
DEPARTMENT OF TRANSPORTATION

IL-47 PAVEMENT MARKING AND LANDSCAPING PLANS

SCALE: 1"= 20' | SHEET 14 OF 15 SHEETS | STA. | TO STA.

F.A.P. RTE.	SECTION	COUNTY	TOTAL SHEETS	SHEET NO.
326	2024-1052-N,C,SW,FL	MCHENRY	941	643
		CONTRACT NO. 62X94		
		ILLINOIS	FED. AID PROJECT	

MODEL: Default
FILE NAME: pw:\\aecom-na-pw.bentley.com:AECOM_D521_NA_2020\Documents\60632011-IL-47900-CAD910_CAD\03_SHEETS\CivilD160X17-sht-gmk-12.dgn

LEGEND:

A - 6" WHITE SOLID
B - 7" WHITE CONTRAST (10' DASH, 30' SKIP)
C - 12" WHITE SOLID (CROSSWALK)
D - 24" WHITE SOLID (STOP BAR)
E - 4" DOUBLE YELLOW SOLID (AT 11" C-C)
F - 27" WHITE CONTRAST (2' DASH, 2' SKIP)
G - 9" WHITE CONTRAST (2' DASH, 6' SKIP)
H - 7" WHITE CONTRAST SOLID
I - 11" WHITE CONTRAST SOLID
J - 15" WHITE CONTRAST CHEVRONS
K - 12" YELLOW DIAGONAL (45°, AT 50' C-C)
L - 12" WHITE CROSSWALK (45°, AT 3' C-C)
M - 6" WHITE (3' DASH, 9' SKIP)
N - 7" YELLOW CONTRAST SOLID
O - 4" YELLOW (10' DASH, 30' SKIP)
P - WHITE CONTRAST LETTERS AND SYMBOLS
Q - 15" WHITE CONTRAST DIAGONAL
R - RAISED REFLECTIVE PAVEMENT MARKER
S - 4" WHITE (10' DASH, 30' SKIP)
T - 6" WHITE (2' DASH, 6' SKIP)

NOTES:

1. SEE BELOW FOR CONTRAST PAVEMENT MARKING INFORMATION AND ALSO SEE DISTRICT 1 TC-12 FOR DETAILS.

7" WHITE CONTRAST PREFORMED PAVEMENT MARKING LINE, TYPE D
(1.5" BLACK, 4" WHITE/YELLOW, 1.5" BLACK) USE WITH
GROOVING FOR RECESSED PAVEMENT MARKING 8"

9" WHITE CONTRAST PREFORMED PAVEMENT MARKING LINE, TYPE D
(1.5" BLACK, 6" WHITE, 1.5" BLACK) USE WITH
GROOVING FOR RECESSED PAVEMENT MARKING 10"

11" WHITE CONTRAST PREFORMED PAVEMENT MARKING LINE, TYPE D
(1.5" BLACK, 8" WHITE, 1.5" BLACK) USE WITH
GROOVING FOR RECESSED PAVEMENT MARKING 12"

15" WHITE CONTRAST PREFORMED PAVEMENT MARKING LINE, TYPE D
(1.5" BLACK, 12" WHITE, 1.5" BLACK) USE WITH
GROOVING FOR RECESSED PAVEMENT MARKING 16"

27" WHITE CONTRAST PREFORMED PAVEMENT MARKING LINE, TYPE D
(1.5" BLACK, 24" WHITE, 1.5" BLACK) USE WITH
GROOVING FOR RECESSED PAVEMENT MARKING 28"

WHITE CONTRAST LETTERS AND SYMBOLS USE WITH
GROOVING FOR RECESSED PAVEMENT MARKING, LETTERS AND SYMBOLS

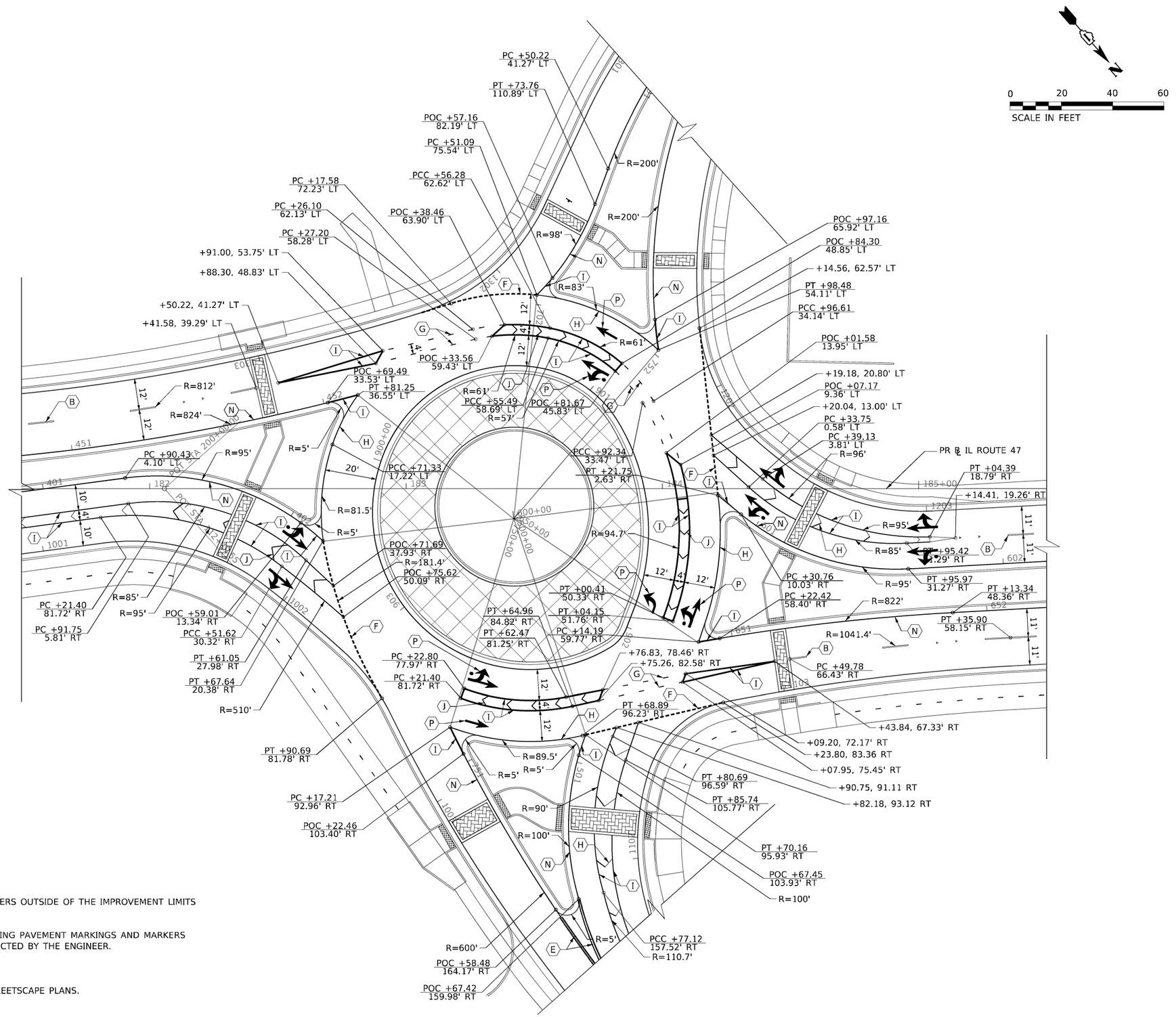

PAVEMENT MARKING MATERIAL:

◇ THERMOPLASTIC PAVEMENT MARKING

△ MODIFIED URETHANE PAVEMENT MARKING

⬡ CONTRAST PREFORMED PLASTIC PAVEMENT MARKING, TYPE D AND GROOVING FOR RECESSED PAVEMENT MARKING

NOTES:

1) ALL DAMAGE TO EXISTING PAVEMENT MARKINGS OR RAISED REFLECTIVE PAVEMENT MARKERS OUTSIDE OF THE IMPROVEMENT LIMITS SHOWN ON THE PLANS SHALL BE REPLACED AT THE CONTRACTOR'S EXPENSE.

2) BEFORE BEGINNING ANY WORK, THE CONTRACTOR SHALL RECORD AND RETAIN ALL EXISTING PAVEMENT MARKINGS AND MARKERS FOR FUTURE REFERENCE. EXACT LOCATIONS OF ALL PAVEMENT MARKINGS SHALL BE DIRECTED BY THE ENGINEER.

3) STATIONS PROVIDED REFER TO PR ℄ IL ROUTE 47 UNLESS OTHERWISE NOTED.

4) FOR LANDSCAPING AND CROSSWALK DETAILS AT THE ROUNDABOUTS, SEE PROPOSED STREETSCAPE PLANS.

AECOM
303 EAST WACKER DRIVE, SUITE 1400
CHICAGO, IL 60601-5276
PHONE: (312) 373-7700 FAX: (312) 373-6800

USER NAME = muniza	DESIGNED - APA	REVISED -	
	DRAWN - KWM	REVISED -	
PLOT SCALE = 40.0000 ' / in.	CHECKED - TJW	REVISED -	
PLOT DATE = 2/12/2025	DATE - 02/06/2025	REVISED -	

STATE OF ILLINOIS
DEPARTMENT OF TRANSPORTATION

IL-47 PAVEMENT MARKING AND LANDSCAPING PLANS

SCALE: 1"= 20' | SHEET 15 OF 15 SHEETS | STA. | TO STA.

F.A.P. RTE.	SECTION	COUNTY	TOTAL SHEETS	SHEET NO.
326	2024-1052-N,C,SW,FL	MCHENRY	941	644
		CONTRACT NO. 62X94		
	ILLINOIS FED. AID PROJECT			

MODEL: Default
FILE NAME: pw:\\aecom-na-pw.bentley.com:AECOM_D521_NA_2020\Documents\60632011-IL-47\900-CAD\910_CAD\03_SHEETS\Civil\D160X17-sht-pmk-13.dgn

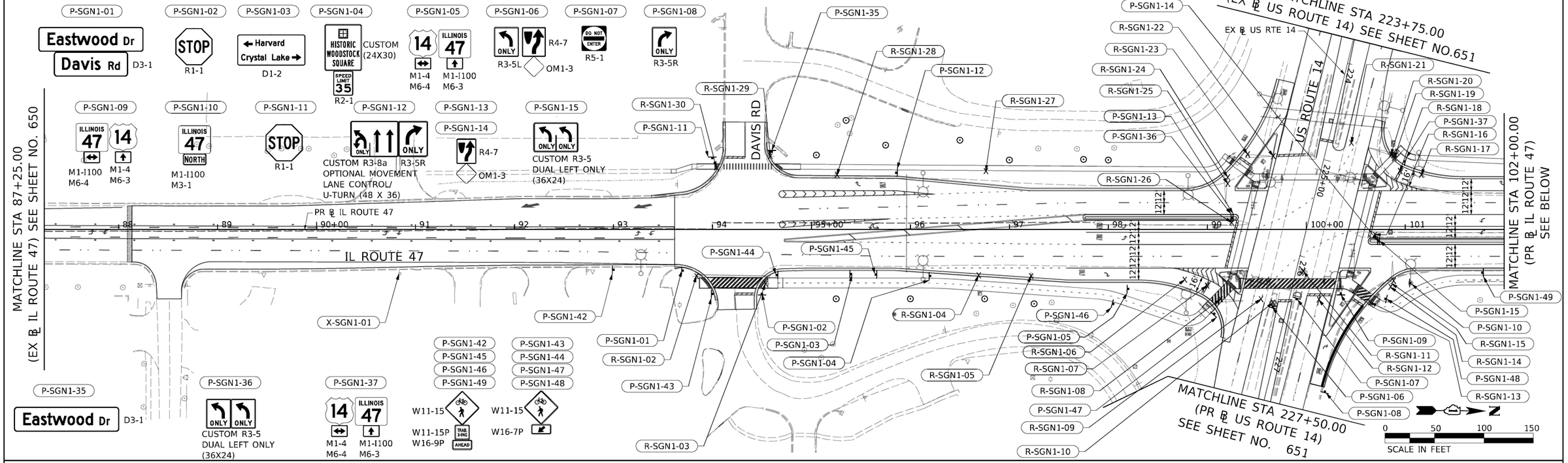

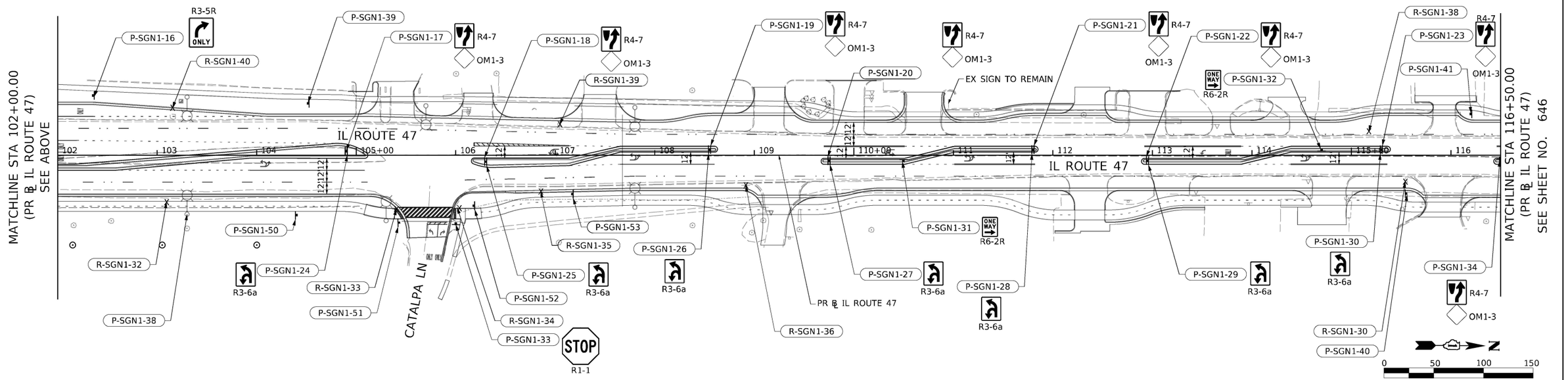

P-SGN1-38
P-SGN1-40
P-SGN1-41
SPEED LIMIT 35
R2-1

P-SGN1-39
Crystal Lake
Harvard
D1-2

P-SGN1-50
P-SGN1-53
W11-15
W11-15P
TRAIL X-ING AHEAD
W16-9P

P-SGN1-51
P-SGN1-52
W11-15
W16-7P

LEGEND:

- X SIGN PANEL REMOVAL OR REMOVE SIGN PANEL ASSEMBLY
- PROPOSED SIGN PANEL OR SIGN PANEL ASSEMBLY
- ⊙ PROPOSED TREE

X-SGN#-## X - EXISTING TO REMAIN
SGN# - SIGNING SHEET NUMBER
- SIGN NUMBER

R-SGN#-## R - REMOVAL
SGN# - SIGNING SHEET NUMBER
- SIGN NUMBER

P-SGN#-## P - PROPOSED
SGN# - SIGNING SHEET NUMBER
- SIGN NUMBER

NOTES:

1) FOR SIGN REMOVALS SEE SCHEDULE FOR ADDITIONAL INFORMATION.
2) STATIONS PROVIDED REFER TO PR ℄ IL ROUTE 47 UNLESS OTHERWISE NOTED.
3) FOR PROPOSED PAVEMENT MARKINGS AND LANDSCAPING, SEE SHEETS 630 TO 644.
4) SEE TRAFFIC SIGNAL PLANS FOR ADDITIONAL SIGNS ATTACHED TO TRAFFIC SIGNALS.

AECOM
303 EAST WACKER DRIVE, SUITE 1400
CHICAGO, IL 60601-5276
PHONE: (312) 373-7700 FAX: (312) 373-6800

USER NAME = muniza	DESIGNED - CRH	REVISED -
	DRAWN - APA	REVISED -
PLOT SCALE = 100.0000 ' / in.	CHECKED - TJW	REVISED -
PLOT DATE = 2/7/2025	DATE - 02/06/2025	REVISED -

STATE OF ILLINOIS
DEPARTMENT OF TRANSPORTATION

IL-47 SIGNING PLANS

SCALE: 1" = 50' | SHEET 1 OF 15 SHEETS | STA. | TO STA.

F.A.P. RTE.	SECTION	COUNTY	TOTAL SHEETS	SHEET NO.
326	2024-1052-N,C,SW,FL	MCHENRY	941	645
		CONTRACT NO. 62X94		
		ILLINOIS	FED. AID PROJECT	

MODEL: Default
FILE NAME: pw:\\aecom-na-pw.bentley.com:AECOM_D521_NA_2020\Documents\60632011-IL-47\900-CAD\910_CAD\03_SHEETS\Civil\D160X17-sht-sign-01.dgn

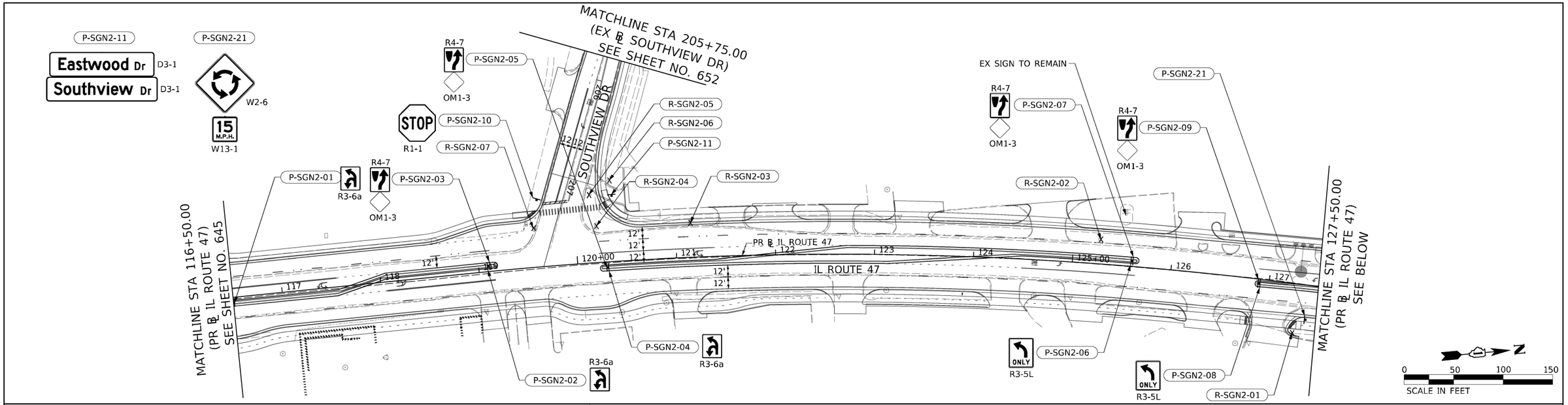

LEGEND:

- X — SIGN PANEL REMOVAL OR REMOVE SIGN PANEL ASSEMBLY
- ⊢ — PROPOSED SIGN PANEL OR SIGN PANEL ASSEMBLY
- ⊙ — PROPOSED TREE
- X-SGN#-## — X - EXISTING TO REMAIN; SGN# - SIGNING SHEET NUMBER; ## - SIGN NUMBER
- R-SGN#-## — R - REMOVAL; SGN# - SIGNING SHEET NUMBER; ## - SIGN NUMBER
- P-SGN#-## — P - PROPOSED; SGN# - SIGNING SHEET NUMBER; ## - SIGN NUMBER

NOTES:

1) FOR SIGN REMOVALS SEE SCHEDULE FOR ADDITIONAL INFORMATION.
2) STATIONS PROVIDED REFER TO PR ℄ IL ROUTE 47 UNLESS OTHERWISE NOTED.
3) FOR PROPOSED PAVEMENT MARKINGS AND LANDSCAPING, SEE SHEETS 630 TO 644.
4) SEE TRAFFIC SIGNAL PLANS FOR ADDITIONAL SIGNS ATTACHED TO TRAFFIC SIGNALS.

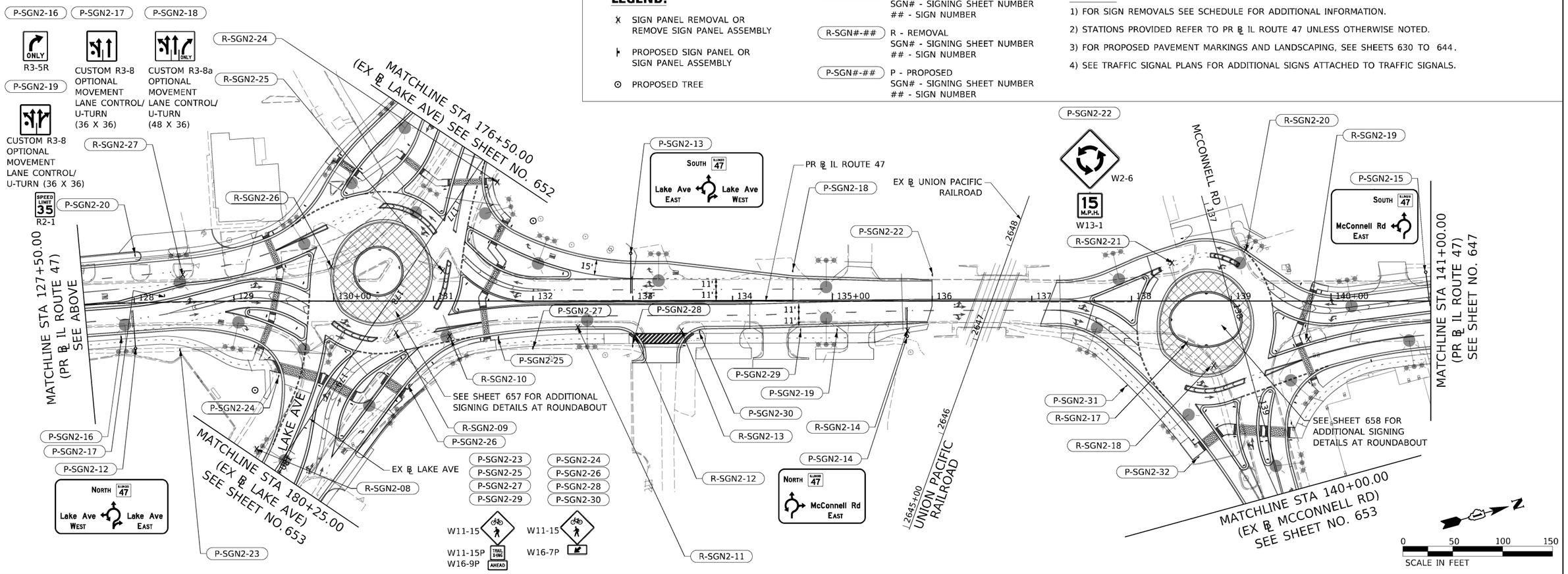

AECOM
303 EAST WACKER DRIVE, SUITE 1400
CHICAGO, IL 60601-5276
PHONE: (312) 373-7700 FAX: (312) 373-6800

USER NAME = muniza	DESIGNED - OPS	REVISED -
	DRAWN - OPS	REVISED -
PLOT SCALE = 100.0000 ' / in.	CHECKED - TJW	REVISED -
PLOT DATE = 2/7/2025	DATE - 02/06/2025	REVISED -

STATE OF ILLINOIS
DEPARTMENT OF TRANSPORTATION

IL-47 SIGNING PLANS

SCALE: 1" = 50' | SHEET 2 OF 15 SHEETS | STA. | TO STA.

F.A.P. RTE.	SECTION	COUNTY	TOTAL SHEETS	SHEET NO.
326	2024-1052-N,C,SW,FL	MCHENRY	941	646
		CONTRACT NO. 62X94		
	ILLINOIS FED. AID PROJECT			

MODEL: Default
FILE NAME: pw:\\aecom-na-pw.bentley.com:AECOM_DS21_NA_2020\Documents\60632011-IL-47\900-CAD\910_CAD\03_SHEETS\Civil\D160X17-shl-sign-02.dgn

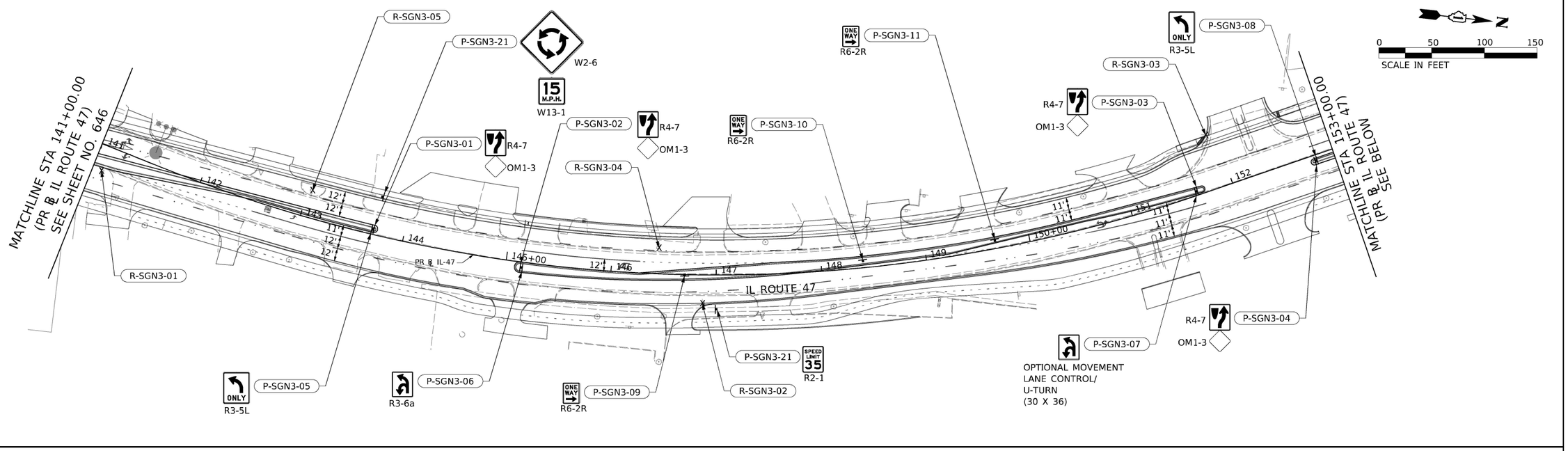

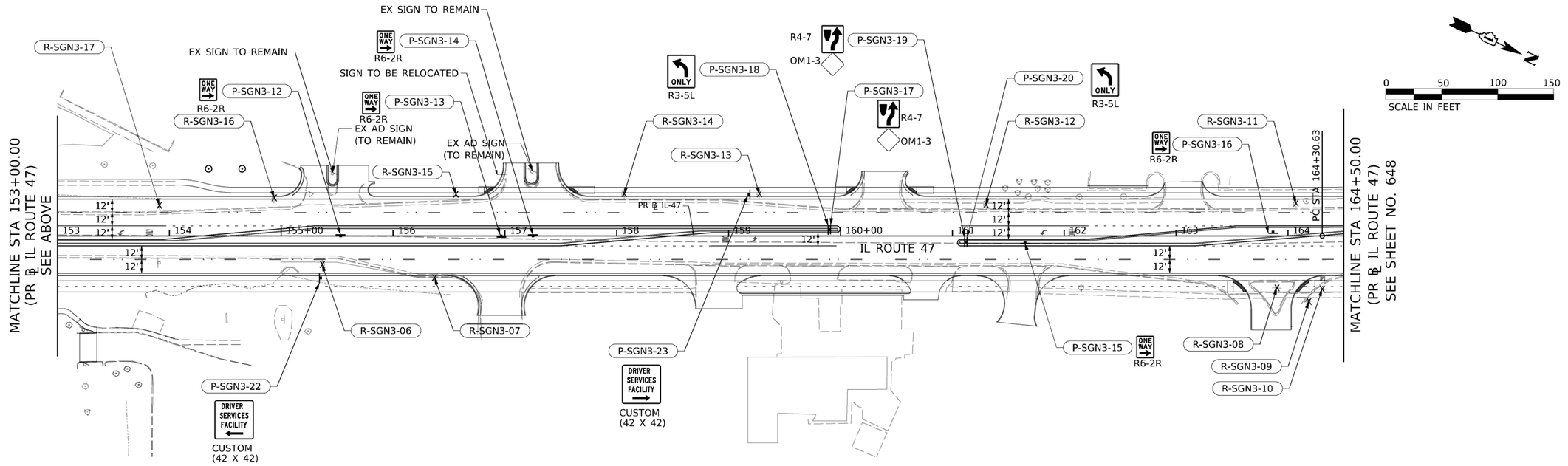

LEGEND:

- X SIGN PANEL REMOVAL OR REMOVE SIGN PANEL ASSEMBLY
- SIGN PANEL OR SIGN PANEL ASSEMBLY
- PROPOSED TREE

X-SGN#-## X - EXISTING TO REMAIN
SGN# - SIGNING SHEET NUMBER
- SIGN NUMBER

R-SGN#-## R - REMOVAL
SGN# - SIGNING SHEET NUMBER
- SIGN NUMBER

P-SGN#-## P - PROPOSED
SGN# - SIGNING SHEET NUMBER
- SIGN NUMBER

NOTES:

1) FOR SIGN REMOVALS SEE SCHEDULE FOR ADDITIONAL INFORMATION.
2) STATIONS PROVIDED REFER TO PR B IL ROUTE 47 UNLESS OTHERWISE NOTED.
3) FOR PROPOSED PAVEMENT MARKINGS AND LANDSCAPING, SEE SHEETS 630 TO 644.
4) SEE TRAFFIC SIGNAL PLANS FOR ADDITIONAL SIGNS ATTACHED TO TRAFFIC SIGNALS.

AECOM
303 EAST WACKER DRIVE, SUITE 1400
CHICAGO, IL 60601-5276
PHONE: (312) 373-7700 FAX: (312) 373-6800

USER NAME = muniza	DESIGNED - OPS	REVISED -
	DRAWN - OPS	REVISED -
PLOT SCALE = 100.0000 ' / In.	CHECKED - TJW	REVISED -
PLOT DATE = 2/7/2025	DATE - 02/06/2025	REVISED -

STATE OF ILLINOIS
DEPARTMENT OF TRANSPORTATION

IL-47 SIGNING PLANS

SCALE: 1" = 50' | SHEET 3 OF 10 SHEETS | STA. | TO STA.

F.A.P. RTE.	SECTION	COUNTY	TOTAL SHEETS	SHEET NO.
326	2024-1052-N,C,SW,FL	MCHENRY	941	647
		CONTRACT NO. 62X94		
		ILLINOIS	FED. AID PROJECT	

MODEL: Default
FILE NAME: pw:\\aecom-na-pw.bentley.com:AECOM_DS21_MA_2020\Documents\60632011-IL-47\900-CAD\910_CAD\03_SHEETS\Civil\D160X17-sht-sign-03.dgn

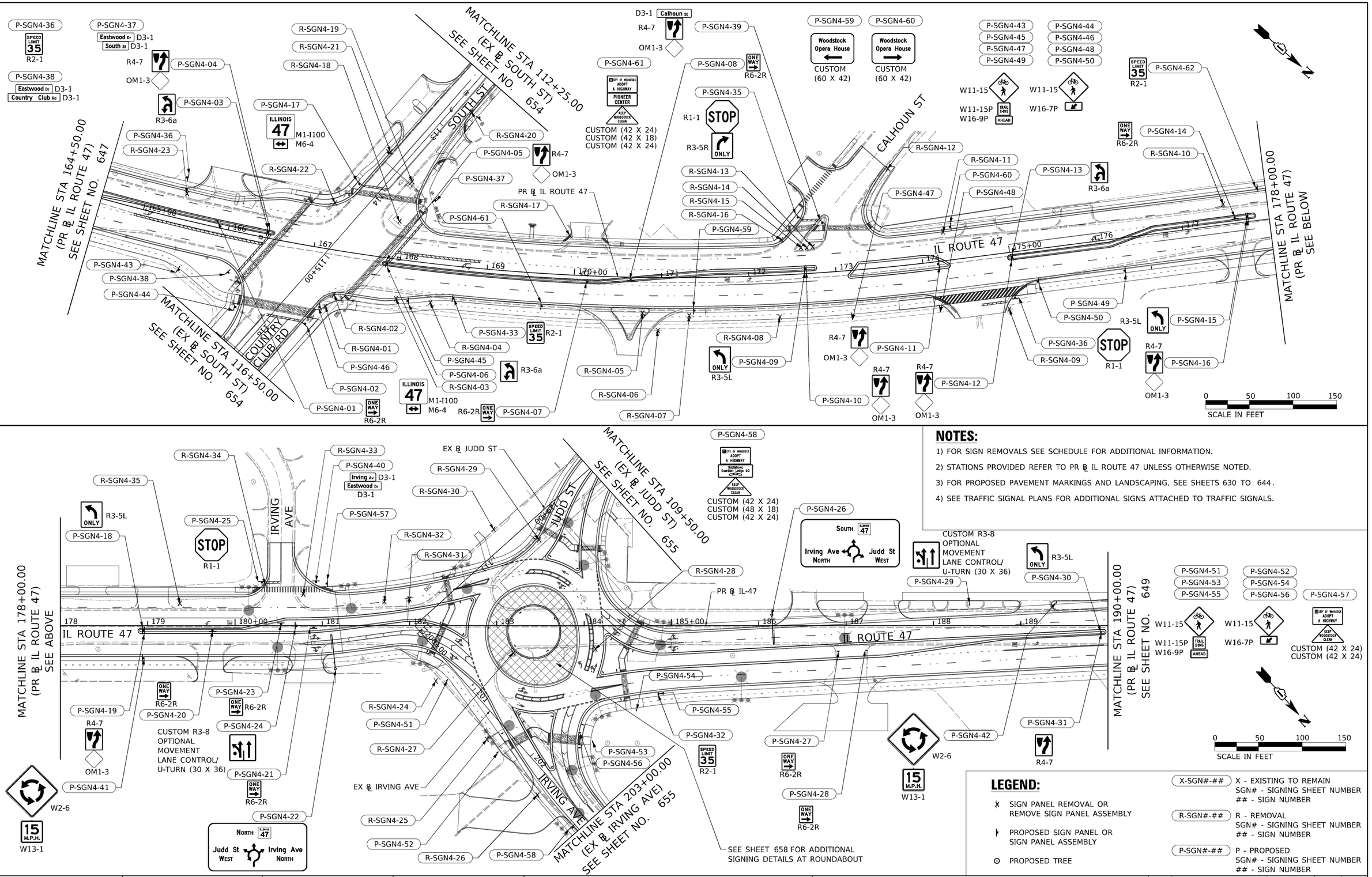

NOTES:

1) FOR SIGN REMOVALS SEE SCHEDULE FOR ADDITIONAL INFORMATION.
2) STATIONS PROVIDED REFER TO PR ℄ IL ROUTE 47 UNLESS OTHERWISE NOTED.
3) FOR PROPOSED PAVEMENT MARKINGS AND LANDSCAPING, SEE SHEETS 630 TO 644.
4) SEE TRAFFIC SIGNAL PLANS FOR ADDITIONAL SIGNS ATTACHED TO TRAFFIC SIGNALS.

LEGEND:

- X — SIGN PANEL REMOVAL OR REMOVE SIGN PANEL ASSEMBLY
- ⊦ — PROPOSED SIGN PANEL OR SIGN PANEL ASSEMBLY
- ⊙ — PROPOSED TREE

X-SGN#-## — X - EXISTING TO REMAIN; SGN# - SIGNING SHEET NUMBER; ## - SIGN NUMBER

R-SGN#-## — R - REMOVAL; SGN# - SIGNING SHEET NUMBER; ## - SIGN NUMBER

P-SGN#-## — P - PROPOSED; SGN# - SIGNING SHEET NUMBER; ## - SIGN NUMBER

AECOM
303 EAST WACKER DRIVE, SUITE 1400
CHICAGO, IL 60601-5276
PHONE: (312) 373-7700 FAX: (312) 373-6800

USER NAME = muniza	DESIGNED - OPS	REVISED -	
	DRAWN - OPS	REVISED -	
PLOT SCALE = 100.0000 ' / in.	CHECKED - TJW	REVISED -	
PLOT DATE = 2/7/2025	DATE - 02/06/2025	REVISED -	

STATE OF ILLINOIS
DEPARTMENT OF TRANSPORTATION

IL-47 SIGNING PLANS

SCALE: 1" = 50' | SHEET 4 OF 15 SHEETS | STA. | TO STA.

F.A.P. RTE.	SECTION	COUNTY	TOTAL SHEETS	SHEET NO.
326	2024-1052-N,C,SW,FL	MCHENRY	941	648
		CONTRACT NO. 62X94		
		ILLINOIS	FED. AID PROJECT	

MODEL: Default
FILE NAME: pw:\\aecom-na-pw.bentley.com:AECOM_DS21_NA_2020\Documents\60632011-IL-47\900-CAD\910_CAD\03_SHEETS\Civil\D160X17-shl-sign-04.dgn

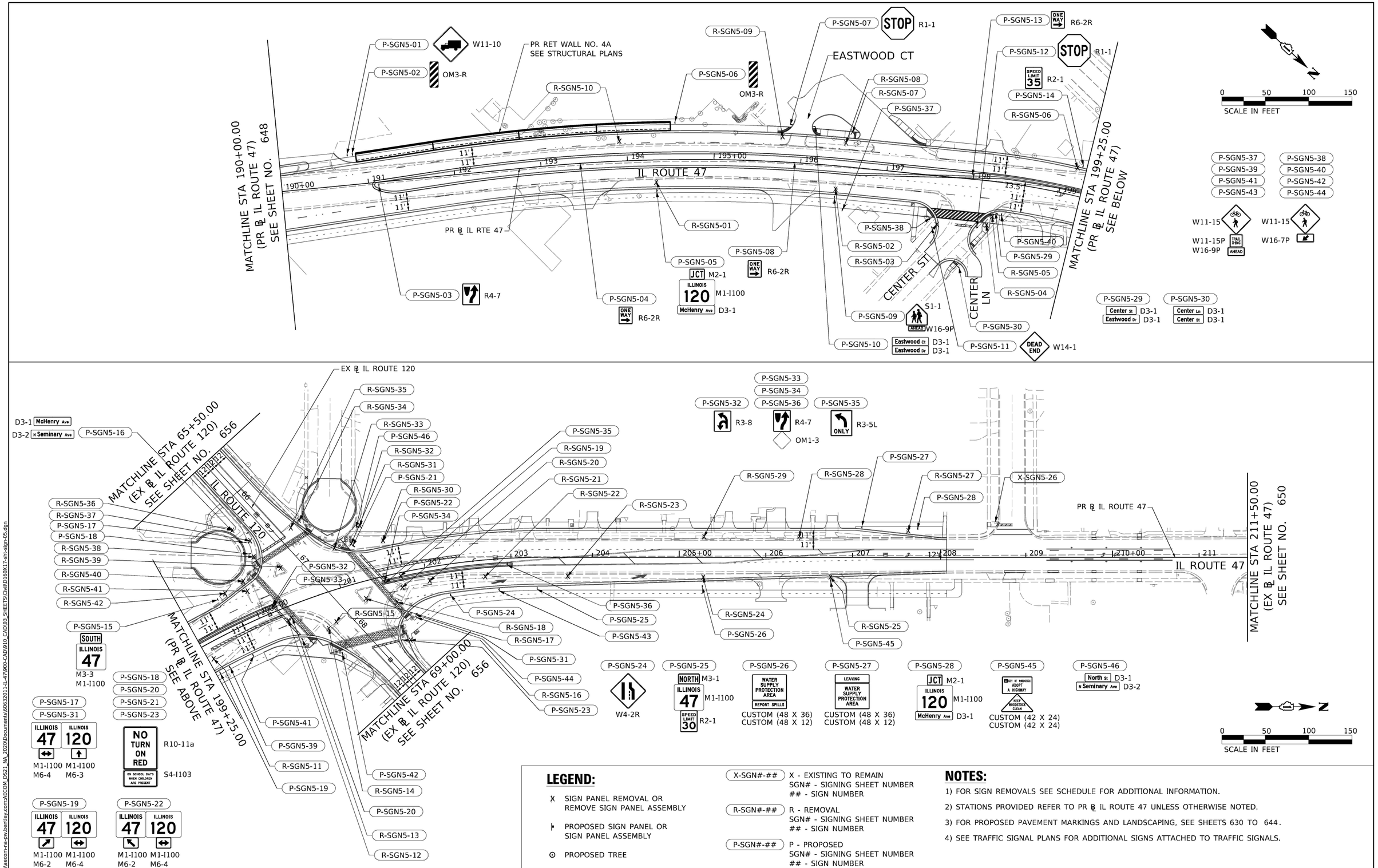

LEGEND:

- X — SIGN PANEL REMOVAL OR REMOVE SIGN PANEL ASSEMBLY
- ⊢ — PROPOSED SIGN PANEL OR SIGN PANEL ASSEMBLY
- ⊙ — PROPOSED TREE

- X-SGN#-## — X - EXISTING TO REMAIN; SGN# - SIGNING SHEET NUMBER; ## - SIGN NUMBER
- R-SGN#-## — R - REMOVAL; SGN# - SIGNING SHEET NUMBER; ## - SIGN NUMBER
- P-SGN#-## — P - PROPOSED; SGN# - SIGNING SHEET NUMBER; ## - SIGN NUMBER

NOTES:

1) FOR SIGN REMOVALS SEE SCHEDULE FOR ADDITIONAL INFORMATION.
2) STATIONS PROVIDED REFER TO PR ℄ IL ROUTE 47 UNLESS OTHERWISE NOTED.
3) FOR PROPOSED PAVEMENT MARKINGS AND LANDSCAPING, SEE SHEETS 630 TO 644.
4) SEE TRAFFIC SIGNAL PLANS FOR ADDITIONAL SIGNS ATTACHED TO TRAFFIC SIGNALS.

AECOM
303 EAST WACKER DRIVE, SUITE 1400
CHICAGO, IL 60601-5276
PHONE: (312) 373-7700 FAX: (312) 373-6800

USER NAME = muniza	DESIGNED - CRH	REVISED -
	DRAWN - APA	REVISED -
PLOT SCALE = 100.0000 ' / in.	CHECKED - TJW	REVISED -
PLOT DATE = 2/7/2025	DATE - 02/06/2025	REVISED -

STATE OF ILLINOIS
DEPARTMENT OF TRANSPORTATION

IL–47 SIGNING PLANS

SCALE: 1" = 50' | SHEET 5 OF 15 SHEETS | STA. | TO STA.

F.A.P. RTE.	SECTION	COUNTY	TOTAL SHEETS	SHEET NO.
326	2024-1052-N,C,SW,FL	MCHENRY	941	649
		CONTRACT NO. 62X94		
		ILLINOIS	FED. AID PROJECT	

MODEL: Default
FILE NAME: pw:\\aecom-na-pw.bentley.com:AECOM_DS2_NA_2020\Documents\60632011-IL-47\900-CAD\910_CAD\03_SHEETS\Civil\D160X17-sht-sign-05.dgn

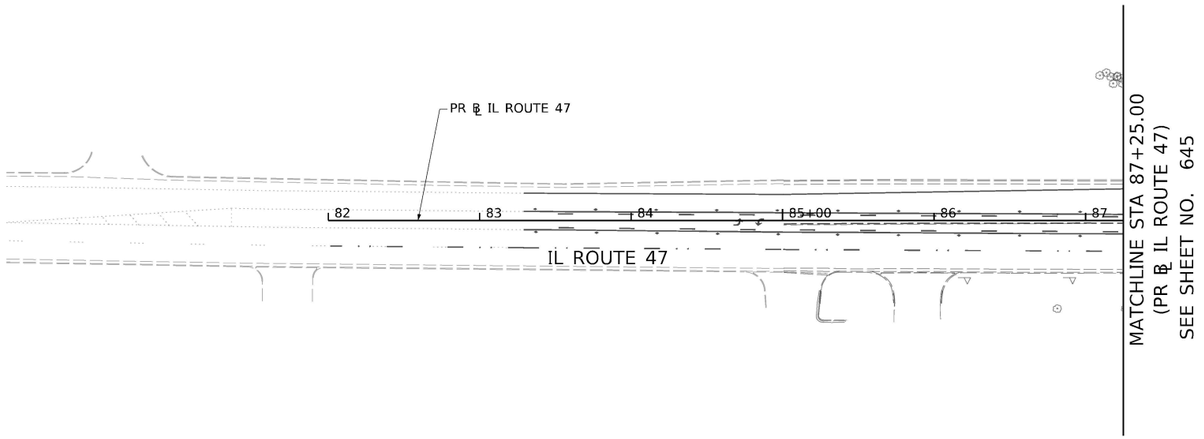

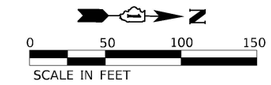

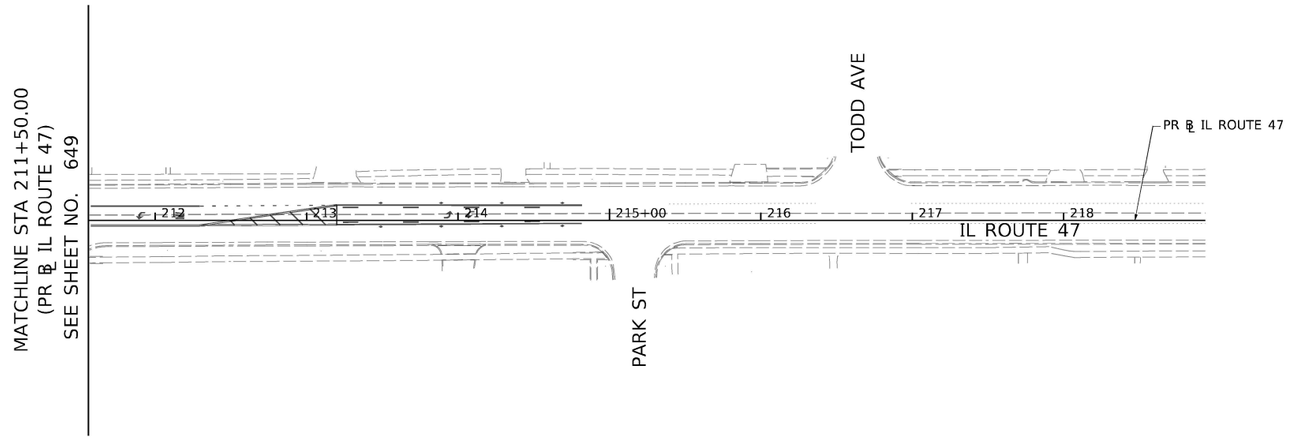

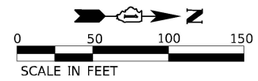

LEGEND:

- X — SIGN PANEL REMOVAL OR REMOVE SIGN PANEL ASSEMBLY
- ⊢ — PROPOSED SIGN PANEL OR SIGN PANEL ASSEMBLY
- ⊙ — PROPOSED TREE

(X-SGN#-##) X - EXISTING TO REMAIN
SGN# - SIGNING SHEET NUMBER
- SIGN NUMBER

(R-SGN#-##) R - REMOVAL
SGN# - SIGNING SHEET NUMBER
- SIGN NUMBER

(P-SGN#-##) P - PROPOSED
SGN# - SIGNING SHEET NUMBER
- SIGN NUMBER

NOTES:

1) FOR SIGN REMOVALS SEE SCHEDULE FOR ADDITIONAL INFORMATION.
2) STATIONS PROVIDED REFER TO PR ℄ IL ROUTE 47 UNLESS OTHERWISE NOTED.
3) FOR PROPOSED PAVEMENT MARKINGS AND LANDSCAPING, SEE SHEETS 630 TO 644.
4) SEE TRAFFIC SIGNAL PLANS FOR ADDITIONAL SIGNS ATTACHED TO TRAFFIC SIGNALS.

AECOM
303 EAST WACKER DRIVE, SUITE 1400
CHICAGO, IL 60601-5276
PHONE: (312) 373-7700 FAX: (312) 373-6800

USER NAME = muniza	DESIGNED - CRH	REVISED -
	DRAWN - APA	REVISED -
PLOT SCALE = 100.0000 ' / In.	CHECKED - TJW	REVISED -
PLOT DATE = 2/7/2025	DATE - 02/06/2025	REVISED -

STATE OF ILLINOIS
DEPARTMENT OF TRANSPORTATION

IL-47 SIGNING PLANS

SCALE: 1" = 50' | SHEET 6 OF 15 SHEETS | STA. | TO STA.

F.A.P. RTE.	SECTION	COUNTY	TOTAL SHEETS	SHEET NO.
326	2024-1052-N,C,SW,FL	MCHENRY	941	650
		CONTRACT NO. 62X94		
	ILLINOIS	FED. AID PROJECT		

MODEL: Default
FILE NAME: pw:\\aecom-na-pw.bentley.com:AECOM_DS21_NA_2020\Documents\60632011-IL-47\900-CAD\910_CAD\03_SHEETS\Civil\D160X17-sht-sign-05A.dgn

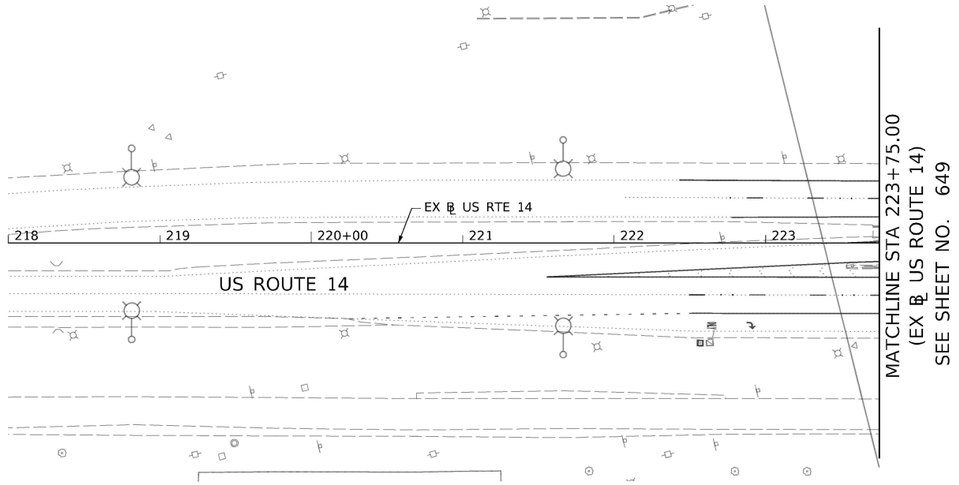

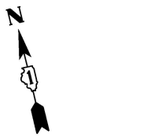

0 50 100 150
SCALE IN FEET

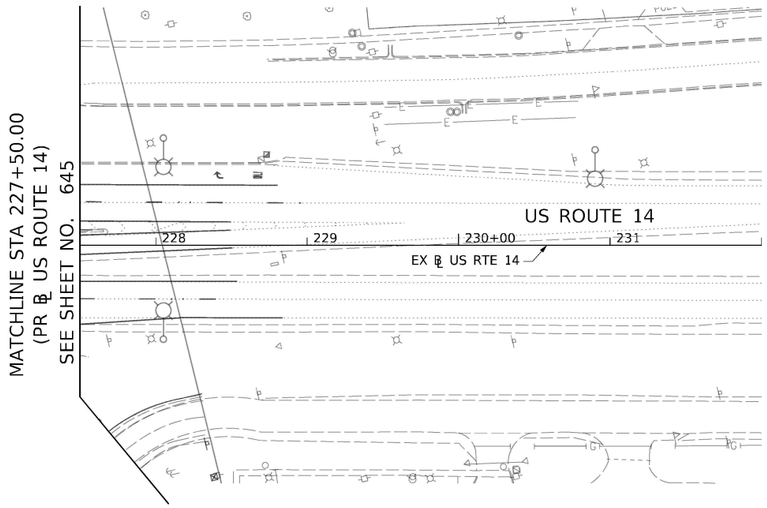

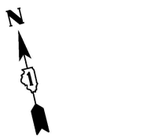

0 50 100 150
SCALE IN FEET

LEGEND:

- X SIGN PANEL REMOVAL OR REMOVE SIGN PANEL ASSEMBLY
- ⊦ PROPOSED SIGN PANEL OR SIGN PANEL ASSEMBLY
- ⊙ PROPOSED TREE

(X-SGN#-##) X - EXISTING TO REMAIN
SGN# - SIGNING SHEET NUMBER
- SIGN NUMBER

(R-SGN#-##) R - REMOVAL
SGN# - SIGNING SHEET NUMBER
- SIGN NUMBER

(P-SGN#-##) P - PROPOSED
SGN# - SIGNING SHEET NUMBER
- SIGN NUMBER

NOTES:

1) FOR SIGN REMOVALS SEE SCHEDULE FOR ADDITIONAL INFORMATION.
2) STATIONS PROVIDED REFER TO PR ℄ IL ROUTE 47 UNLESS OTHERWISE NOTED.
3) FOR PROPOSED PAVEMENT MARKINGS AND LANDSCAPING, SEE SHEETS 630 TO 644.
4) SEE TRAFFIC SIGNAL PLANS FOR ADDITIONAL SIGNS ATTACHED TO TRAFFIC SIGNALS.

AECOM
303 EAST WACKER DRIVE, SUITE 1400
CHICAGO, IL 60601-5276
PHONE: (312) 373-7700 FAX: (312) 373-6800

USER NAME = muniza	DESIGNED - CRH	REVISED -
	DRAWN - APA	REVISED -
PLOT SCALE = 100.0000 ' / In.	CHECKED - TJW	REVISED -
PLOT DATE = 2/7/2025	DATE - 02/06/2025	REVISED -

STATE OF ILLINOIS
DEPARTMENT OF TRANSPORTATION

IL-47 SIGNING PLANS

SCALE: 1" = 50' | SHEET 7 OF 15 SHEETS | STA. | TO STA.

F.A.P. RTE.	SECTION	COUNTY	TOTAL SHEETS	SHEET NO.
326	2024-1052-N,C,SW,FL	MCHENRY	941	651
		CONTRACT NO. 62X94		
		ILLINOIS	FED. AID PROJECT	

MODEL: Default
FILE NAME: pw:\\aecom-na-pw.bentley.com:AECOM_DS21_NA_2020\Documents\60632011-IL-47\900-CAD\910_CAD\03_SHEETS\Civil\D160X17-sht-sign-058.dgn

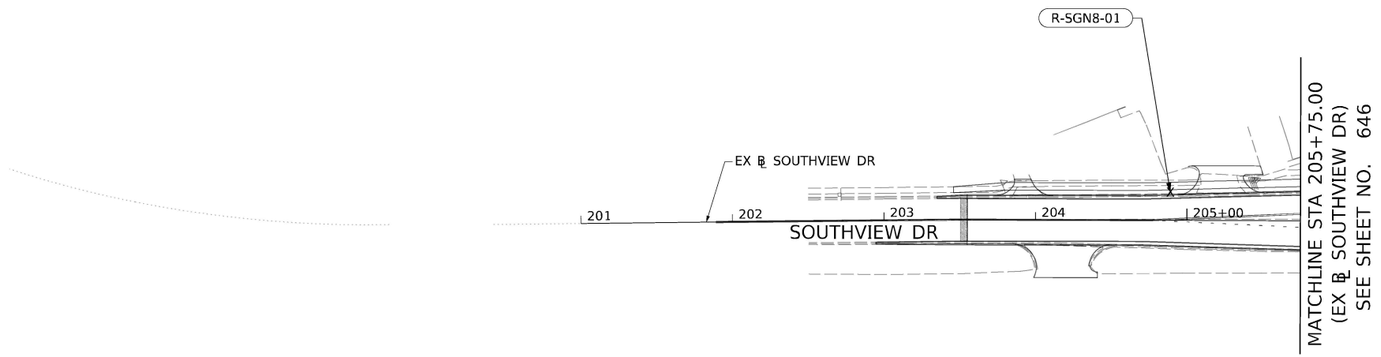

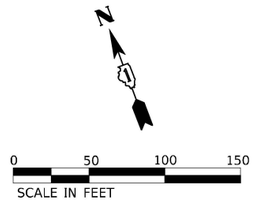

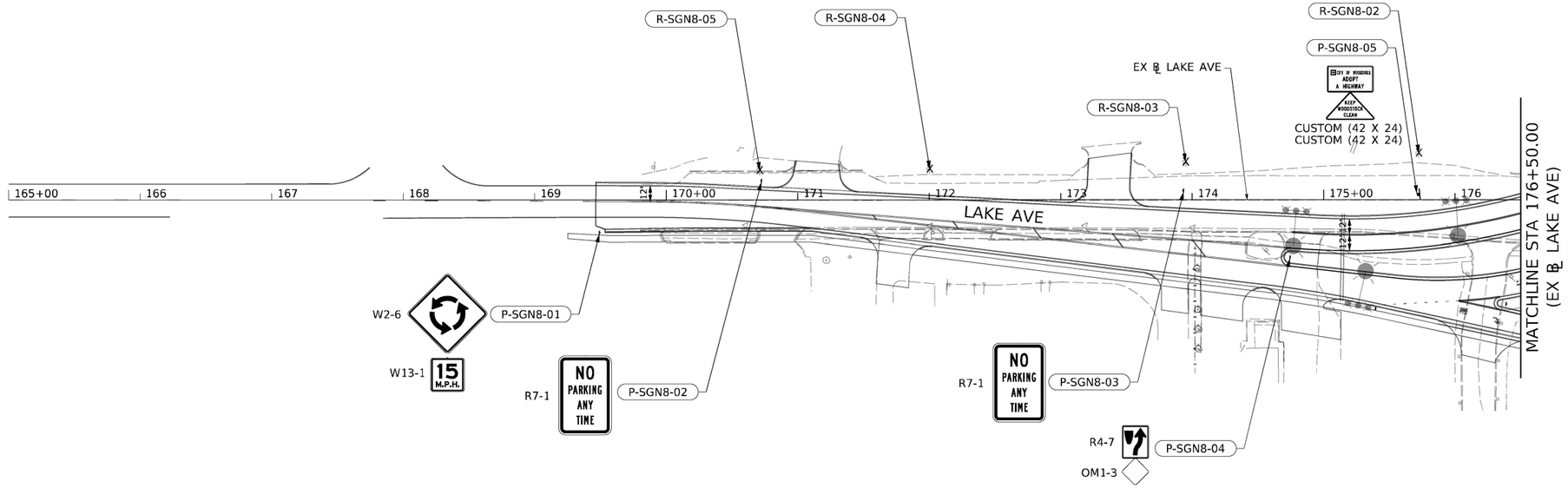

LEGEND:

- X — SIGN PANEL REMOVAL OR REMOVE SIGN PANEL ASSEMBLY
- ⊦ — PROPOSED SIGN PANEL OR SIGN PANEL ASSEMBLY
- ⊙ — PROPOSED TREE

(X-SGN#-##) X - EXISTING TO REMAIN
SGN# - SIGNING SHEET NUMBER
- SIGN NUMBER

(R-SGN#-##) R - REMOVAL
SGN# - SIGNING SHEET NUMBER
- SIGN NUMBER

(P-SGN#-##) P - PROPOSED
SGN# - SIGNING SHEET NUMBER
- SIGN NUMBER

NOTES:

1) FOR SIGN REMOVALS SEE SCHEDULE FOR ADDITIONAL INFORMATION.
2) STATIONS PROVIDED REFER TO PR ℄ IL ROUTE 47 UNLESS OTHERWISE NOTED.
3) FOR PROPOSED PAVEMENT MARKINGS AND LANDSCAPING, SEE SHEETS 630 TO 644.
4) SEE TRAFFIC SIGNAL PLANS FOR ADDITIONAL SIGNS ATTACHED TO TRAFFIC SIGNALS.

AECOM
303 EAST WACKER DRIVE, SUITE 1400
CHICAGO, IL 60601-5276
PHONE: (312) 373-7700 FAX: (312) 373-6800

USER NAME = muniza	DESIGNED - CRH	REVISED -
	DRAWN - APA	REVISED -
PLOT SCALE = 100.0000 ' / In.	CHECKED - TJW	REVISED -
PLOT DATE = 2/7/2025	DATE - 02/06/2025	REVISED -

STATE OF ILLINOIS
DEPARTMENT OF TRANSPORTATION

IL-47 SIGNING PLANS

SCALE: 1" = 50' | SHEET 8 OF 15 SHEETS | STA. | TO STA.

F.A.P. RTE.	SECTION	COUNTY	TOTAL SHEETS	SHEET NO.
326	2024-1052-N,C,SW,FL	MCHENRY	941	652
		CONTRACT NO. 62X94		
		ILLINOIS	FED. AID PROJECT	

MODEL: Default
FILE NAME: pw:\\aecom-na-pw.bentley.com:AECOM_0521_NA_2020\Documents\60632011-IL-47(900-CAD\91D_CAD\03_SHEETS\Civil\D160X17-sht-sign-06.dgn

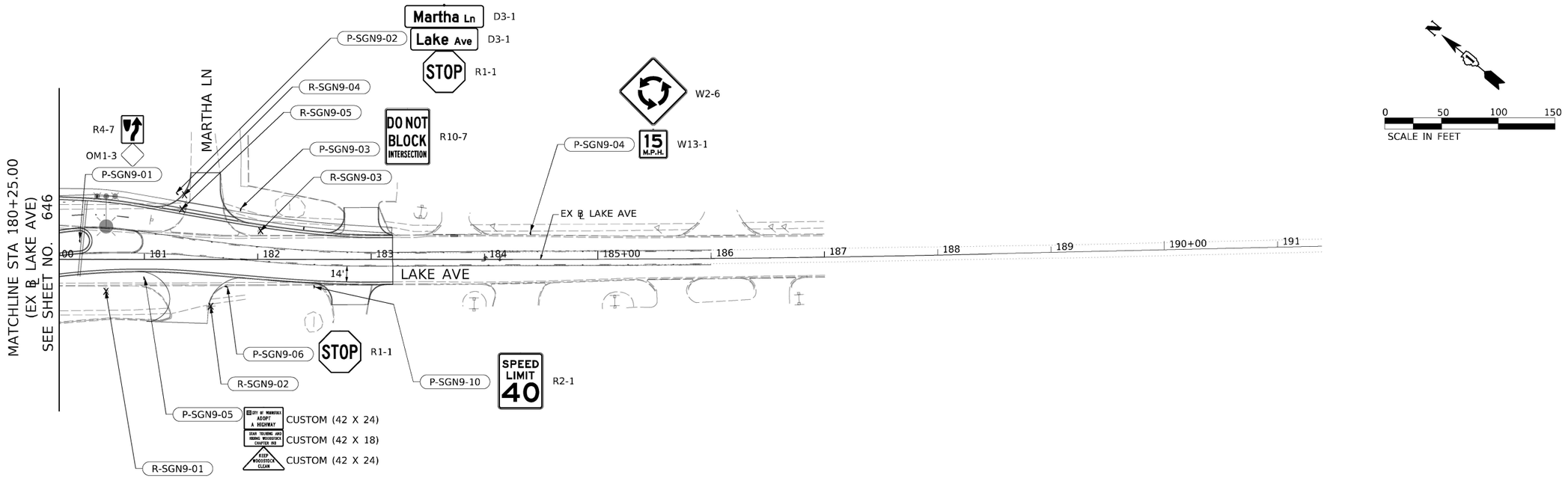

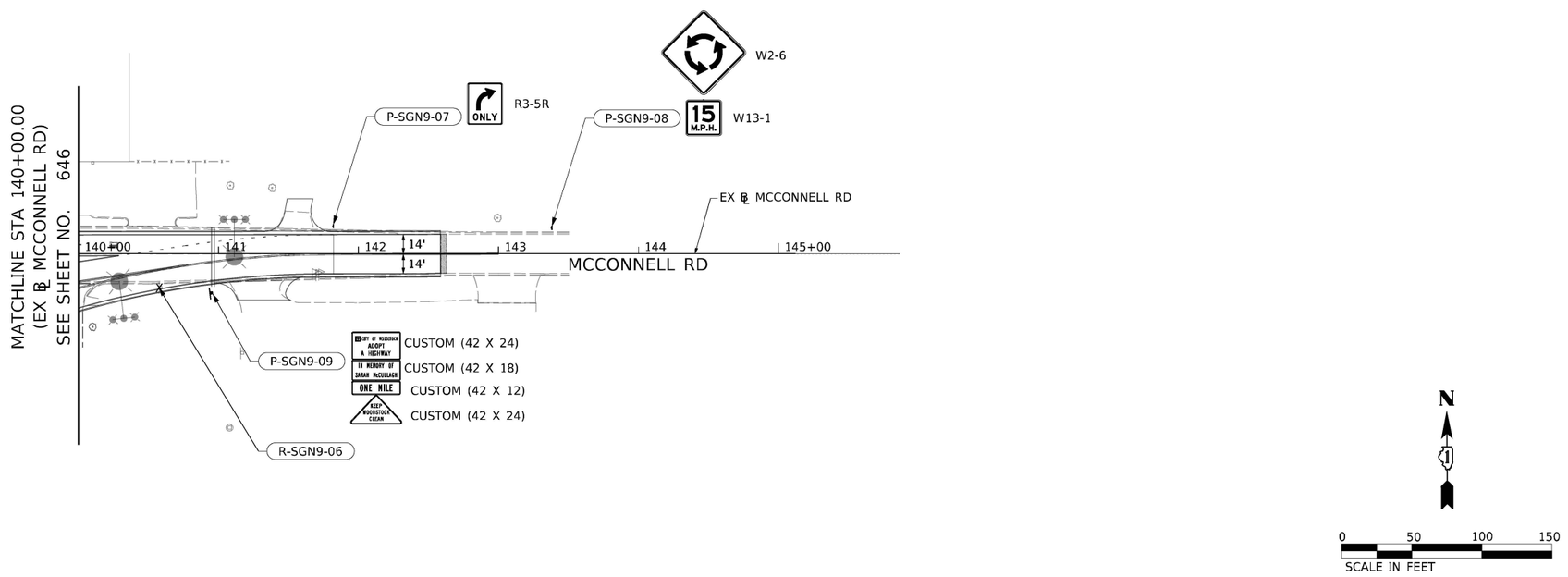

LEGEND:

- X SIGN PANEL REMOVAL OR REMOVE SIGN PANEL ASSEMBLY
- ⊦ PROPOSED SIGN PANEL OR SIGN PANEL ASSEMBLY
- ⊙ PROPOSED TREE

(X-SGN#-##) X - EXISTING TO REMAIN
SGN# - SIGNING SHEET NUMBER
- SIGN NUMBER

(R-SGN#-##) R - REMOVAL
SGN# - SIGNING SHEET NUMBER
- SIGN NUMBER

(P-SGN#-##) P - PROPOSED
SGN# - SIGNING SHEET NUMBER
- SIGN NUMBER

NOTES:

1) FOR SIGN REMOVALS SEE SCHEDULE FOR ADDITIONAL INFORMATION.
2) STATIONS PROVIDED REFER TO PR ℄ IL ROUTE 47 UNLESS OTHERWISE NOTED.
3) FOR PROPOSED PAVEMENT MARKINGS AND LANDSCAPING, SEE SHEETS 630 TO 644.
4) SEE TRAFFIC SIGNAL PLANS FOR ADDITIONAL SIGNS ATTACHED TO TRAFFIC SIGNALS.

AECOM
303 EAST WACKER DRIVE, SUITE 1400
CHICAGO, IL 60601-5276
PHONE: (312) 373-7700 FAX: (312) 373-6800

USER NAME = muniza	DESIGNED - CRH	REVISED -
	DRAWN - APA	REVISED -
PLOT SCALE = 100.0000 ' / in.	CHECKED - TJW	REVISED -
PLOT DATE = 2/7/2025	DATE - 02/06/2025	REVISED -

STATE OF ILLINOIS
DEPARTMENT OF TRANSPORTATION

IL-47 SIGNING PLANS

SCALE: 1" = 50' | SHEET 9 OF 15 SHEETS | STA. | TO STA.

F.A.P. RTE.	SECTION	COUNTY	TOTAL SHEETS	SHEET NO.
326	2024-1052-N,C,SW,FL	MCHENRY	941	653
		CONTRACT NO. 62X94		
	ILLINOIS FED. AID PROJECT			

MODEL: Default
FILE NAME: pw:\\aecom-na-pw.bentley.com:AECOM_DS21_NA_2020\Documents\60632011-IL-47\900-CAD\910_CAD\03_SHEETS\Civil\D160X17-sht-sign-07.dgn

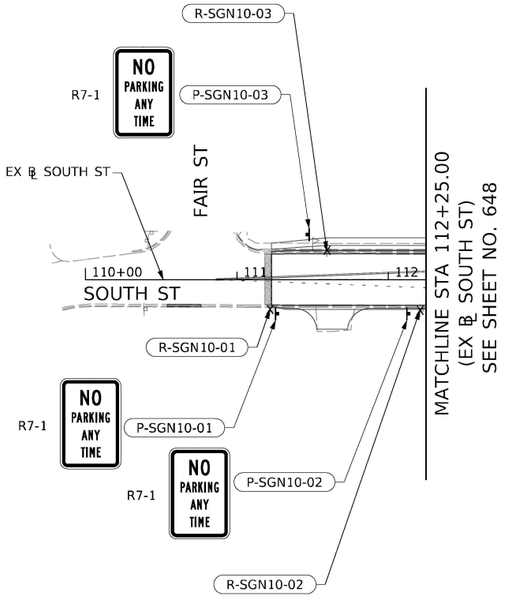

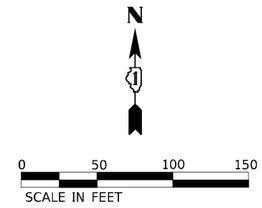

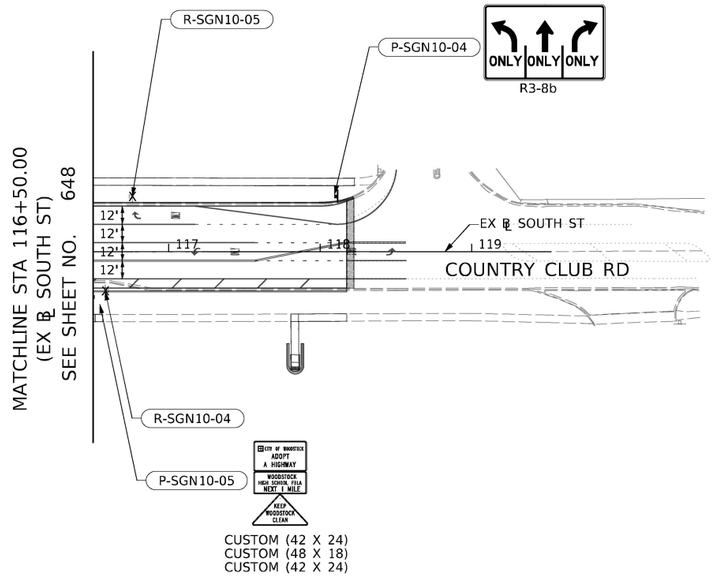

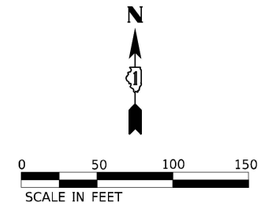

LEGEND:

- X — SIGN PANEL REMOVAL OR REMOVE SIGN PANEL ASSEMBLY
- ⊢ — PROPOSED SIGN PANEL OR SIGN PANEL ASSEMBLY
- ⊙ — PROPOSED TREE

X-SGN#-## — X - EXISTING TO REMAIN
SGN# - SIGNING SHEET NUMBER
- SIGN NUMBER

R-SGN#-## — R - REMOVAL
SGN# - SIGNING SHEET NUMBER
- SIGN NUMBER

P-SGN#-## — P - PROPOSED
SGN# - SIGNING SHEET NUMBER
- SIGN NUMBER

NOTES:

1) FOR SIGN REMOVALS SEE SCHEDULE FOR ADDITIONAL INFORMATION.
2) STATIONS PROVIDED REFER TO PR ℄ IL ROUTE 47 UNLESS OTHERWISE NOTED.
3) FOR PROPOSED PAVEMENT MARKINGS AND LANDSCAPING, SEE SHEETS 630 TO 644.
4) SEE TRAFFIC SIGNAL PLANS FOR ADDITIONAL SIGNS ATTACHED TO TRAFFIC SIGNALS.

AECOM
303 EAST WACKER DRIVE, SUITE 1400
CHICAGO, IL 60601-5276
PHONE: (312) 373-7700 FAX: (312) 373-6800

USER NAME = muniza	DESIGNED - CRH	REVISED -	
	DRAWN - APA	REVISED -	
PLOT SCALE = 100.0000 ' / in.	CHECKED - TJW	REVISED -	
PLOT DATE = 2/7/2025	DATE - 02/06/2025	REVISED -	

STATE OF ILLINOIS
DEPARTMENT OF TRANSPORTATION

IL–47 SIGNING PLANS

SCALE: 1" = 50' | SHEET 10 OF 15 SHEETS | STA. | TO STA.

F.A.P. RTE.	SECTION	COUNTY	TOTAL SHEETS	SHEET NO.
326	2024-1052-N,C,SW,FL	MCHENRY	941	654
		CONTRACT NO. 62X94		
	ILLINOIS	FED. AID PROJECT		

MODEL: Default
FILE NAME: pw:\\aecom-na-pw.bentley.com:AECOM_DS21_NA_2020\Documents\60632011-IL-47\900-CAD\910_CAD\03_SHEETS\Civil\D160X17-sht-sign-08.dgn

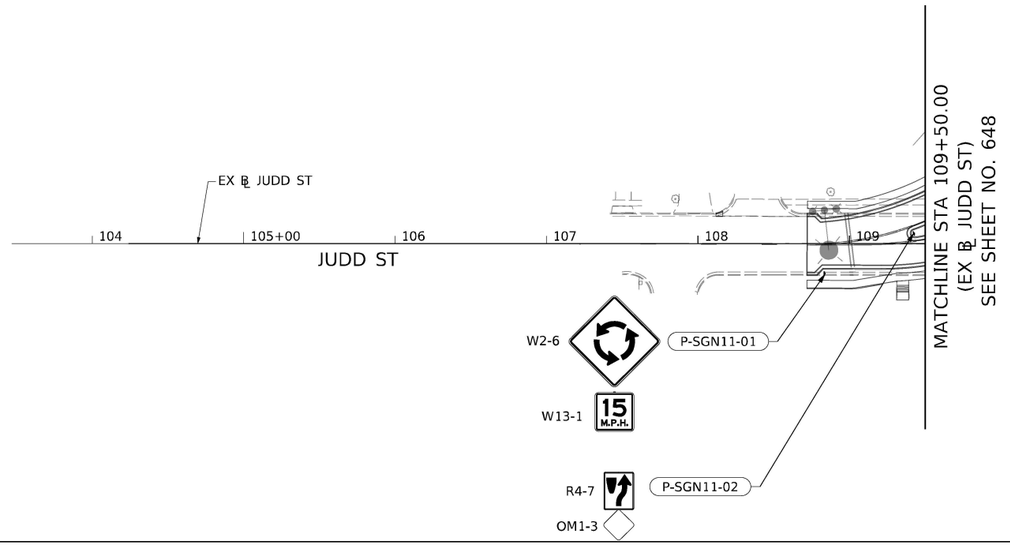

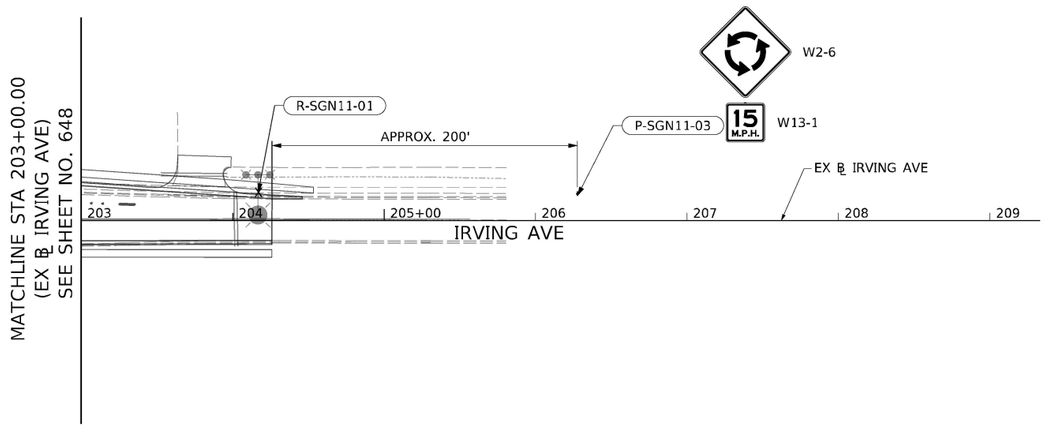

0 50 100 150
SCALE IN FEET

LEGEND:

- X SIGN PANEL REMOVAL OR REMOVE SIGN PANEL ASSEMBLY
- PROPOSED SIGN PANEL OR SIGN PANEL ASSEMBLY
- ⊙ PROPOSED TREE

(X-SGN#-##) X - EXISTING TO REMAIN
SGN# - SIGNING SHEET NUMBER
- SIGN NUMBER

(R-SGN#-##) R - REMOVAL
SGN# - SIGNING SHEET NUMBER
- SIGN NUMBER

(P-SGN#-##) P - PROPOSED
SGN# - SIGNING SHEET NUMBER
- SIGN NUMBER

NOTES:

1) FOR SIGN REMOVALS SEE SCHEDULE FOR ADDITIONAL INFORMATION.
2) STATIONS PROVIDED REFER TO PR ℄ IL ROUTE 47 UNLESS OTHERWISE NOTED.
3) FOR PROPOSED PAVEMENT MARKINGS AND LANDSCAPING, SEE SHEETS 630 TO 644.
4) SEE TRAFFIC SIGNAL PLANS FOR ADDITIONAL SIGNS ATTACHED TO TRAFFIC SIGNALS.

AECOM
303 EAST WACKER DRIVE, SUITE 1400
CHICAGO, IL 60601-5276
PHONE: (312) 373-7700 FAX: (312) 373-6800

USER NAME = muniza	DESIGNED - CRH	REVISED -	
	DRAWN - APA	REVISED -	
PLOT SCALE = 100.0000 ' / in.	CHECKED - TJW	REVISED -	
PLOT DATE = 2/7/2025	DATE - 02/06/2025	REVISED -	

STATE OF ILLINOIS
DEPARTMENT OF TRANSPORTATION

IL-47 SIGNING PLANS

SCALE: 1" = 50' | SHEET 11 OF 15 SHEETS | STA. | TO STA.

F.A.P. RTE.	SECTION	COUNTY	TOTAL SHEETS	SHEET NO.
326	2024-1052-N,C,SW,FL	MCHENRY	941	655
		CONTRACT NO. 62X94		
		ILLINOIS	FED. AID PROJECT	

MODEL: Default
FILE NAME: pw:\\aecom-na-pw.bentley.com:AECOM DS21 NA 2020\Documents\60632011-IL-47\900-CAD\910 CAD\03 SHEETS\Civil\D160X17-sht-sign-09.dgn

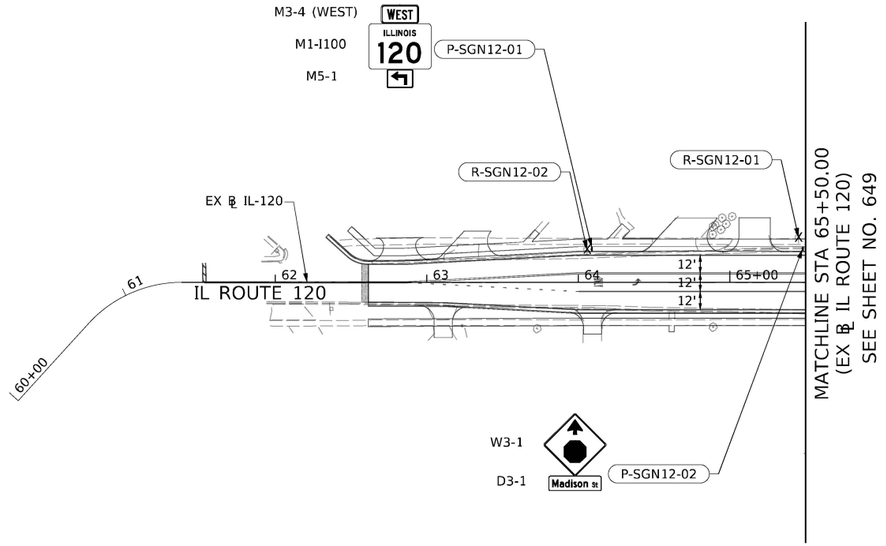

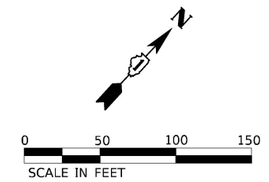

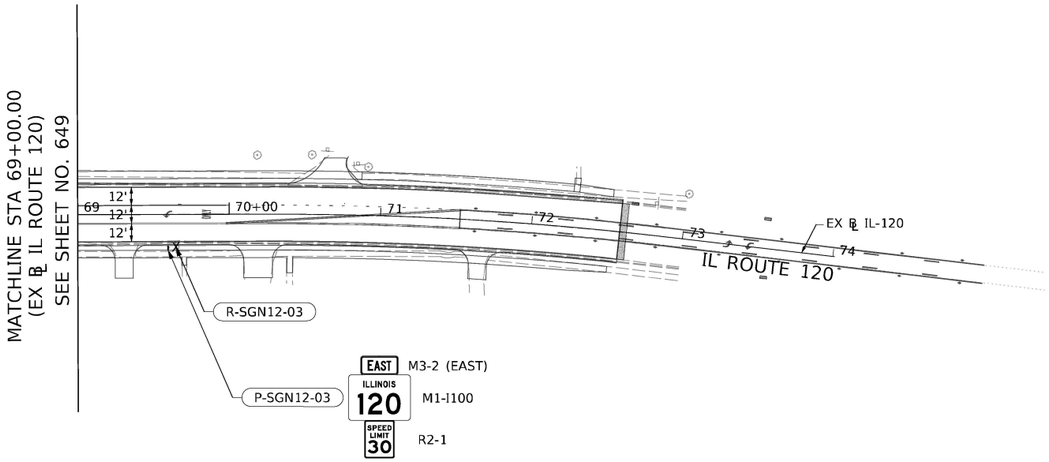

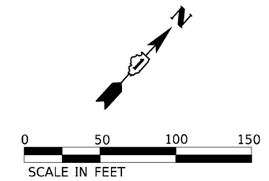

LEGEND:

- X — SIGN PANEL REMOVAL OR REMOVE SIGN PANEL ASSEMBLY
- ⊢ — PROPOSED SIGN PANEL OR SIGN PANEL ASSEMBLY
- ⊙ — PROPOSED TREE

(X-SGN#-##) X - EXISTING TO REMAIN
SGN# - SIGNING SHEET NUMBER
- SIGN NUMBER

(R-SGN#-##) R - REMOVAL
SGN# - SIGNING SHEET NUMBER
- SIGN NUMBER

(P-SGN#-##) P - PROPOSED
SGN# - SIGNING SHEET NUMBER
- SIGN NUMBER

NOTES:

1) FOR SIGN REMOVALS SEE SCHEDULE FOR ADDITIONAL INFORMATION.
2) STATIONS PROVIDED REFER TO PR ℄ IL ROUTE 47 UNLESS OTHERWISE NOTED.
3) FOR PROPOSED PAVEMENT MARKINGS AND LANDSCAPING, SEE SHEETS 630 TO 644.
4) SEE TRAFFIC SIGNAL PLANS FOR ADDITIONAL SIGNS ATTACHED TO TRAFFIC SIGNALS.

AECOM
303 EAST WACKER DRIVE, SUITE 1400
CHICAGO, IL 60601-5276
PHONE: (312) 373-7700 FAX: (312) 373-6800

USER NAME = muniza	DESIGNED - CRH	REVISED -	
	DRAWN - APA	REVISED -	
PLOT SCALE = 100.0000 ' / in.	CHECKED - TJW	REVISED -	
PLOT DATE = 2/7/2025	DATE - 02/06/2025	REVISED -	

STATE OF ILLINOIS
DEPARTMENT OF TRANSPORTATION

IL–47 SIGNING PLANS

SCALE: 1" = 50' | SHEET 12 OF 15 SHEETS | STA. | TO STA.

F.A.P. RTE.	SECTION	COUNTY	TOTAL SHEETS	SHEET NO.
326	2024-1052-N,C,SW,FL	MCHENRY	941	656
		CONTRACT NO. 62X94		
	ILLINOIS	FED. AID PROJECT		

MODEL: Default
FILE NAME: pw:\\aecom-na-pw.bentley.com:AECOM_D521_NA_2020\Documents\60632011-IL-47\900-CAD\910_CAD\03_SHEETS\Civil\D160X17-slt-sign-10.dgn

R6-1R (36x12)



OM1-3

P-SGN13-01
P-SGN13-02
P-SGN13-03
P-SGN13-04



R1-2

P-SGN13-05
P-SGN13-06
P-SGN13-07
P-SGN13-08
P-SGN13-09
P-SGN13-10
P-SGN13-11
P-SGN13-12
P-SGN13-13
P-SGN13-14
P-SGN13-25



W11-2



M6-2L

P-SGN13-15
P-SGN13-16
P-SGN13-17
P-SGN13-18
P-SGN13-19
P-SGN13-20
P-SGN13-21
P-SGN13-22
P-SGN13-23
P-SGN13-24



W11-2



M6-2R

P-SGN13-26
P-SGN13-27
P-SGN13-28
P-SGN13-29
P-SGN13-30
P-SGN13-31
P-SGN13-32
P-SGN13-33



M3-3 (SOUTH)



M1-I100



M6-2

P-SGN13-34



M3-1 (NORTH)



M1-I100



M6-2

P-SGN13-35
P-SGN13-36
P-SGN13-37



W12-1

P-SGN13-38
P-SGN13-39
P-SGN13-40



D1-1d, (66x30)

P-SGN13-41



D1-1d, (66x30)

P-SGN13-42

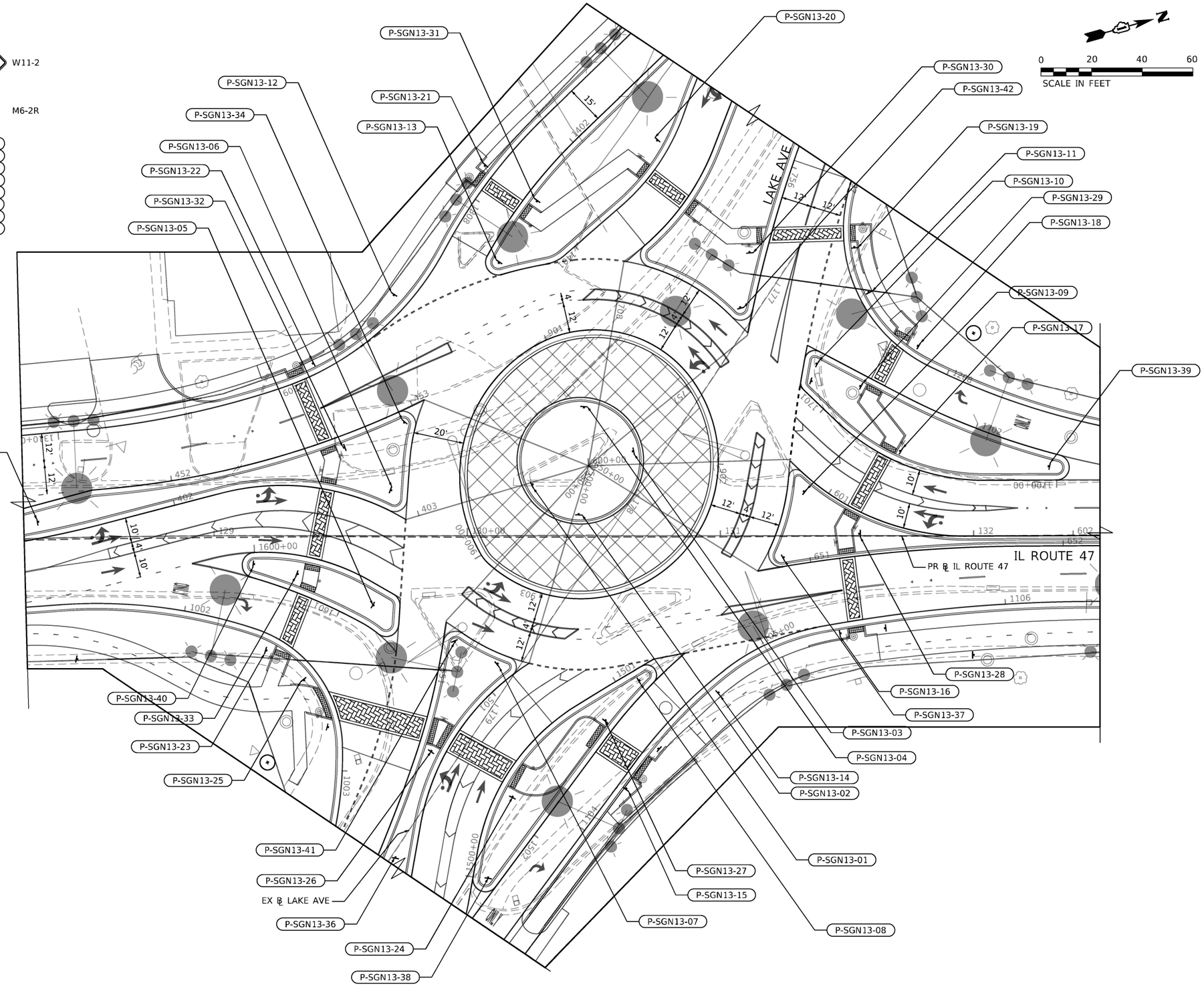

MODEL: Default
FILE NAME: pw:\\aecom-na-pw.bentley.com:AECOM DS21_NA 2020\Documents\60632011-IL-47800-CAD\910 CAD\03 SHEETS\Civil\D160X17-sht-sign-11.dgn

AECOM
303 EAST WACKER DRIVE, SUITE 1400
CHICAGO, IL 60601-5276
PHONE: (312) 373-7700 FAX: (312) 373-6800

USER NAME = PIMSARNO	DESIGNED - APA	REVISED -
	DRAWN - APA	REVISED -
PLOT SCALE = 40.0000 ' / in.	CHECKED - TJW	REVISED -
PLOT DATE = 02/11/25	DATE - 02/06/2025	REVISED -

STATE OF ILLINOIS
DEPARTMENT OF TRANSPORTATION

IL-47 SIGNING PLANS

SCALE: 1"= 20' | SHEET 13 OF 15 SHEETS | STA. | TO STA.

F.A.P. RTE.	SECTION	COUNTY	TOTAL SHEETS	SHEET NO.
326	2024-1052-N,C,SW,FL	MCHENRY	941	657
		CONTRACT NO. 62X94		
	ILLINOIS FED. AID PROJECT			

R6-1R (36x12)



OM1-3

P-SGN14-01
P-SGN14-02
P-SGN14-03
P-SGN14-04



R1-2

P-SGN14-05
P-SGN14-06
P-SGN14-07
P-SGN14-08
P-SGN14-09
P-SGN14-10
P-SGN14-23
P-SGN14-29



W11-2



M6-2L

P-SGN14-11
P-SGN14-12
P-SGN14-13
P-SGN14-14
P-SGN14-15



W11-2



M6-2R

P-SGN14-16
P-SGN14-17
P-SGN14-18
P-SGN14-19
P-SGN14-28

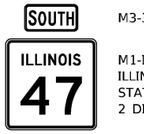

M3-3 (SOUTH)

M1-I100,
ILLINOIS
STATE ROUTE,
2 DIGITS, SPECIAL



M6-2

P-SGN14-20



M3-1 (NORTH)

M1-I100,
ILLINOIS
STATE ROUTE,
2 DIGITS, SPECIAL



M6-2

P-SGN14-21

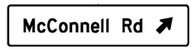

D1-1d, (78x18)

P-SGN14-22
P-SGN14-27



R4-7

P-SGN14-24
P-SGN14-25



W12-1

P-SGN14-26

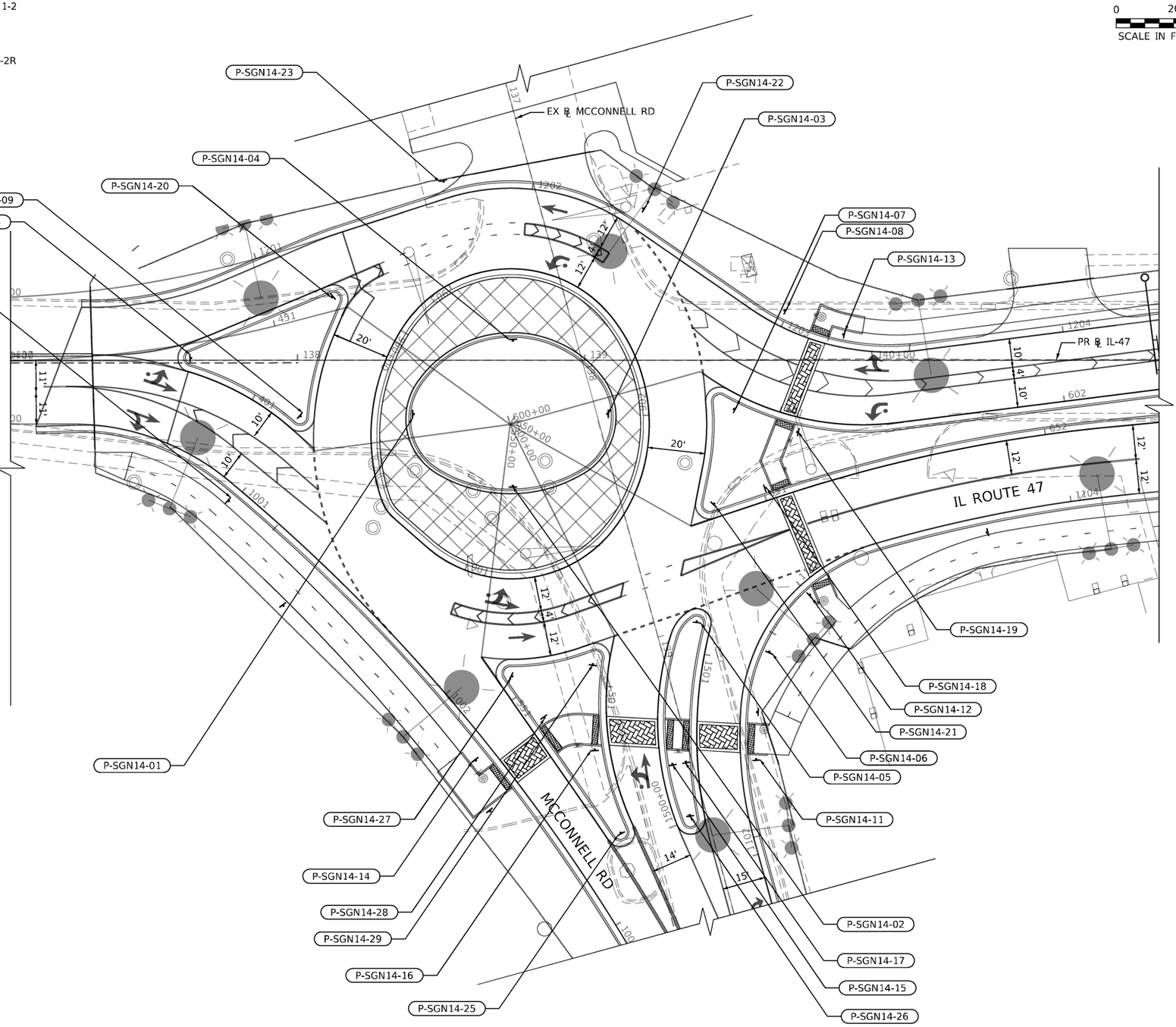

MODEL: Default
FILE NAME: pw:\\aecom-na-pw.bentley.com:AECOM_DS21_NA_2020\Documents\60632011-IL-47\900-CAD\910_CAD\03_SHEETS\Civil\D160X17-sht-sign-12.dgn

AECOM
303 EAST WACKER DRIVE, SUITE 1400
CHICAGO, IL 60601-5276
PHONE: (312) 373-7700 FAX: (312) 373-6800

USER NAME = PIMSARNO	DESIGNED - CRH	REVISED -
	DRAWN - APA	REVISED -
PLOT SCALE = 40.0000 ' / in.	CHECKED - TJW	REVISED -
PLOT DATE = 02/11/25	DATE - 02/06/2025	REVISED -

STATE OF ILLINOIS
DEPARTMENT OF TRANSPORTATION

IL-47 SIGNING PLANS

SCALE: 1"= 20' | SHEET 14 OF 15 SHEETS | STA. | TO STA.

F.A.P. RTE.	SECTION	COUNTY	TOTAL SHEETS	SHEET NO.
326	2024-1052-N,C,SW,FL	MCHENRY	941	658
		CONTRACT NO. 62X94		
		ILLINOIS FED. AID PROJECT		

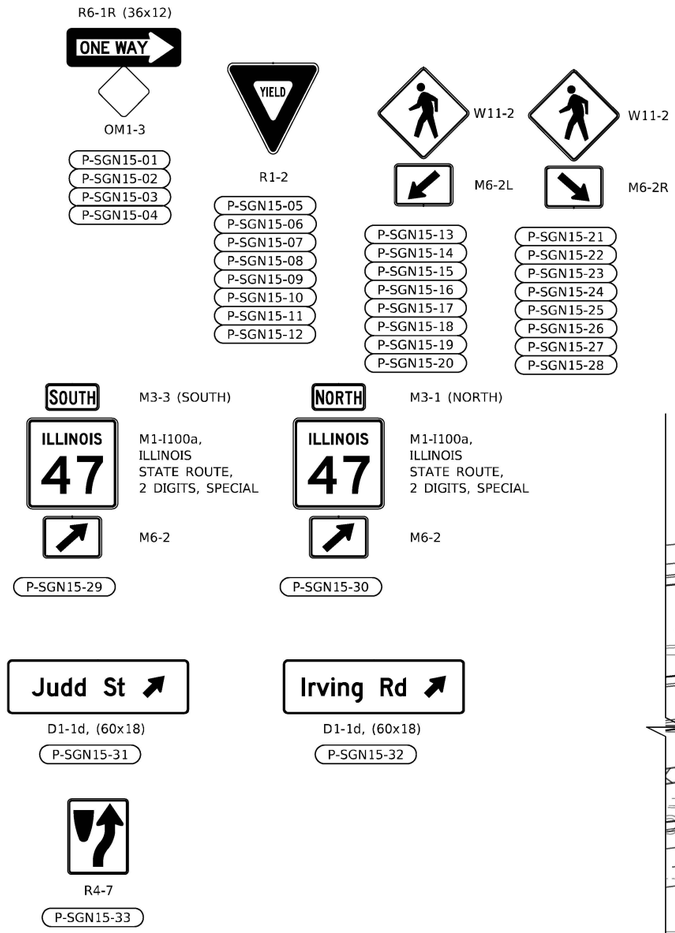

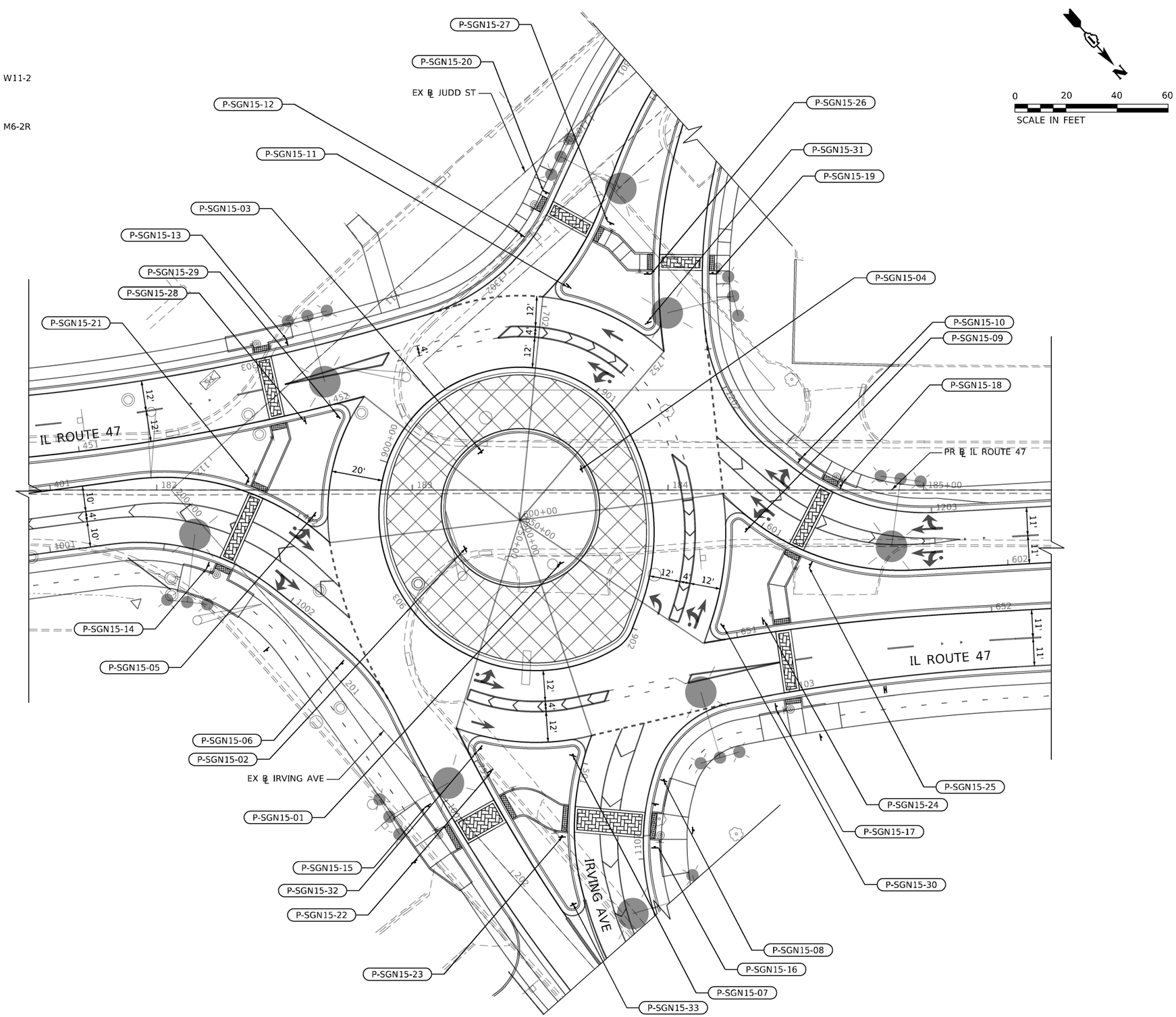

MODEL: Default
FILE NAME: pw:\\aecom-na-pw.bentley.com:AECOM DS21 NA 2020\Documents\60632011-IL-47\900-CAD\910 CAD\03 SHEETS\Civil\D160X17-sht-sign-13.dgn

AECOM
303 EAST WACKER DRIVE, SUITE 1400
CHICAGO, IL 60601-5276
PHONE: (312) 373-7700 FAX: (312) 373-6800

USER NAME = PIMSARNO	DESIGNED - CRH	REVISED -	
	DRAWN - APA	REVISED -	
PLOT SCALE = 40.0000 ' / in.	CHECKED - TJW	REVISED -	
PLOT DATE = 02/11/25	DATE - 02/06/2025	REVISED -	

STATE OF ILLINOIS
DEPARTMENT OF TRANSPORTATION

IL-47 SIGNING PLANS

SCALE: 1"= 20' | SHEET 15 OF 15 SHEETS | STA. | TO STA.

F.A.P. RTE.	SECTION	COUNTY	TOTAL SHEETS	SHEET NO.
326	2024-1052-N,C,SW,FL	MCHENRY	941	659
		CONTRACT NO. 62X94		
		ILLINOIS	FED. AID PROJECT	

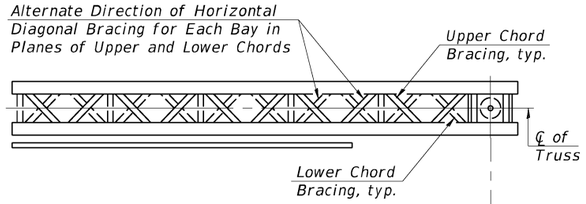

TYPICAL PLAN

(Walkway not shown)

Structure Number	Station	Design Truss Type	Cantilever Length (L)	Elev. A	Dim. D	Ds	Total Sign Area
1C056S047R128.0	128+00.00	III-C-A	38'-6"	929.83	17'-6"	8'-6"	148.75
1C056S047L133.0	132+98.00	III-C-A	40"-0"	928.51	10'-1 1/8"	8'-6"	148.75
1C056S047R135.8	135+75.00	II-C-A	29'-0"	926.34	11'-3 3/8"	8'-6"	114.75
1C056S047L141.0	140+95.00	III-C-A	34"-0"	924.36	15'-3"	8'-6"	114.75
1C056S047R181.2	181+15.00	III-C-A	40'-0"	887.45	19'-3"	8'-6"	148.75
1C056S047L186.2	186+15.00	III-C-A	34'-0"	886.51	15'-0 5/8"	8'-6"	148.75

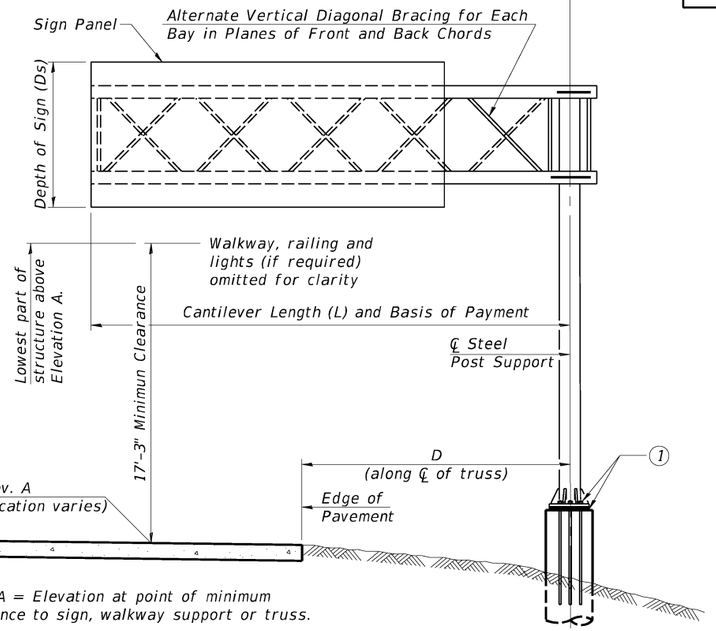

Elev. A = Elevation at point of minimum clearance to sign, walkway support or truss.

TYPICAL ELEVATION

Looking in Direction of Traffic

Sign support structures may be subject to damaging vibrations and oscillations when sign panels are not in place during erection or maintenance of the structure. To avoid these vibrations and oscillations, consideration should be given to attaching temporary blank sign panels to the structure.

WALKWAY: Walkway grating, walkway brackets, handrails, lighting and associated components shown in these plans on the traffic side of the sign structure/sign panel will not be installed with Contract 62X94. The truss grating and maintenance walkway behind the sign panel will be included with this pay item.

Truss Type	Maximum Sign Area	Maximum Length
I-C-A	170 Sq. Ft.	25 Ft.
II-C-A	340 Sq. Ft.	30 Ft.
III-C-A	400 Sq. Ft.	40 Ft.

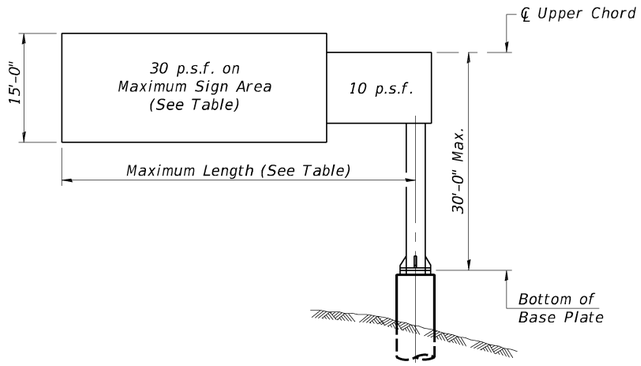

DESIGN WIND LOADING DIAGRAM

Parameters shown are basis for I.D.O.T. Standards Installations not within dimensional limits shown require special analysis for all components.

Note:
Trusses shall be shipped individually with adequate provision to prevent detrimental motion during transport. This may require ropes between horizontals and diagonals or energy dissipating (elastic) ties to the vehicle. The contractor is responsible for maintaining the configuration and protection of the trusses.

(1) After adjustments to level truss and insure adequate vertical clearance, all top and leveling nuts shall be tightened against the base plate with a minimum torque of 200 lb.-ft. Stainless steel mesh shall then be placed around the perimeter of the base plate. Secure to base plate with stainless steel banding.

* If M270 Gr. 50W (M222) steel is proposed, chemistry for plate to be used shall first be approved by the Engineer as suitable for galvanizing and welding.

GENERAL NOTES

DESIGN: AASHTO Standard Specifications for Structural Supports for Highway Signs, Luminaires and Traffic Signals. ("AASHTO Specifications")

CONSTRUCTION: Current (at time of letting) Illinois Department of Transportation Standard Specifications for Road and Bridge Construction, Supplemental Specifications and Special Provisions. ("Standard Specifications")

LOADING: 90 M.P.H. WIND VELOCITY

WALKWAY LOADING: Dead load plus 500 lbs. concentrated live load.

DESIGN STRESSES:
Field Units
f' = 3,500 p.s.i.
fy = 60,000 p.s.i. (reinforcement)

WELDING: All welds to be continuous unless otherwise shown. All welding to be done in accordance with current AWS D1.1 and D1.2 Structural Welding Codes (Steel and Aluminum) and the Standard Specificiations.

MATERIALS: Aluminum Alloys as shown throughout plans. All Structural Steel Pipe shall be ASTM A53 Grade B or A500 Grade B or C. If A500 pipe is substituted for A53, then the outside diameter shall be as detailed and wall thickness greater than or equal to A53.
All Structural Steel Plates and Shapes shall conform to AASHTO M270 Gr. 36, Gr. 50 or Gr. 50W*. Stainless steel for shims, sleeves and handhole covers shall be ASTM A240, Type 302 or 304, or another alloy suitable for exterior exposure and acceptable to the Engineer.
The steel pipe and stiffening ribs at the base plate for the column shall have a minimum longitudinal Charpy V-Notch (CVN) energy of 15 lb.-ft. at 40° F. (Zone 2) before galvanizing.

FASTENERS FOR ALUMINUM TRUSSES: All bolts noted as "high strength" must satisfy the requirements of AASHTO M164 (ASTM A325), or approved alternate, and must have matching lock nuts. Threaded studs for splices (if Members interfere) must satisfy the requirements of ASTM A449, ASTM A193, Grade B7, or approved alternate, and must have matching lock nuts. Bolts and lock nuts not required to be high strength must satisfy the requirements of ASTM A307. All bolts and lock nuts must be hot dip galvanized per AASHTO M232. The lock nuts must have nylon or steel inserts. A stainless steel flat washer conforming to ASTM A240 Type 302 or 304, is required under both head and nut or under both nuts where threaded studs are used. High strength bolt installation shall conform to Article 505.04 (f) (2)d of the IDOT Standard Specifications for Road and Bridge Construction. Rotational capacity ("ROCAP") testing of bolts will not be required.

U-BOLTS AND EYEBOLTS: U-Bolts and Eyebolts must be produced from ASTM A276 Type 304, 304L, 316 or 316L, Condition A, cold finished stainless steel, or an equivalent material acceptable to the Engineer. All nuts for U-Bolts and Eyebolts must be lock nuts equivalent to ASTM A307 with nylon or steel inserts and hot dip galvanized per AASHTO M232. A stainless steel flat washer conforming to ASTM A240, Type 302 or 304, is required under each U-Bolt and Eyebolt lock nut.

GALVANIZING: All Steel Grating, Plates, Shapes and Pipe shall be Hot Dip Galvanized after fabrication in accordance with AASHTO M111. Painting is not permitted.

ANCHOR RODS: Shall conform to ASTM F1554 Gr. 105.

CONCRETE SURFACES: All concrete surfaces above an elevation 6" below the lowest final ground line at each foundation shall be cleaned and coated with Concrete Sealer in accordance with the Standard Specifications.

REINFORCEMENT BARS: Reinforcement Bars designated (E) shall be epoxy coated in accordance with the Standard Specifications.

FOUNDATIONS: The contract unit price for Drilled Shaft Concrete Foundations shall include reinforcement bars complete in place.

TOTAL BILL OF MATERIAL

ITEM	UNIT	TOTAL
OVERHEAD SIGN STRUCTURE CANTILEVER TYPE I-C-A	Foot	N/A
OVERHEAD SIGN STRUCTURE - CANTILEVER TYPE II-C-A (36"X5'-6")	Foot	29
OVERHEAD SIGN STRUCTURE - CANTILEVER TYPE III-C-A (36"X7'-0")	Foot	187
OVERHEAD SIGN STRUCTURE WALKWAY, TYPE A	Foot	N/A
DRILLED SHAFT CONCRETE FOUNDATIONS	Cu. Yds.	60.1

OSC-A-1 2-17-2017

AECOM
303 EAST WACKER DRIVE, SUITE 1400
CHICAGO, IL 60601-5276
PHONE: (312) 373-7700 FAX: (312) 373-6800

USER NAME = ButtM	DESIGNED - MB	REVISED -	
	CHECKED - AM	REVISED -	
PLOT SCALE = N.T.S.	DRAWN - MB	REVISED -	
PLOT DATE = 02/06/2025	CHECKED - ATB	REVISED -	

STATE OF ILLINOIS
DEPARTMENT OF TRANSPORTATION

CANTILEVER SIGN STRUCTURES - GENERAL PLAN & ELEVATION
ALUMINUM TRUSS & STEEL POST

SHEET NO. 1 OF 9 SHEETS

F.A.P. RTE.	SECTION	COUNTY	TOTAL SHEETS	SHEET NO.
326	2024-1052-N,C,SW,FL	MCHENRY	941	660
		CONTRACT NO. 62X94		
		ILLINOIS	FED. AID PROJECT	

MODEL: Sheet
FILE NAME: pw:\\aecom-na-pw.bentley.com:aECOM_0521_NA_2020\Documents\60632011-IL-47090-CAD\01D_CAD\03_SHEETS\StructuralOverhead Sign Structures\D160X17-CSS-001-GPE.dgn

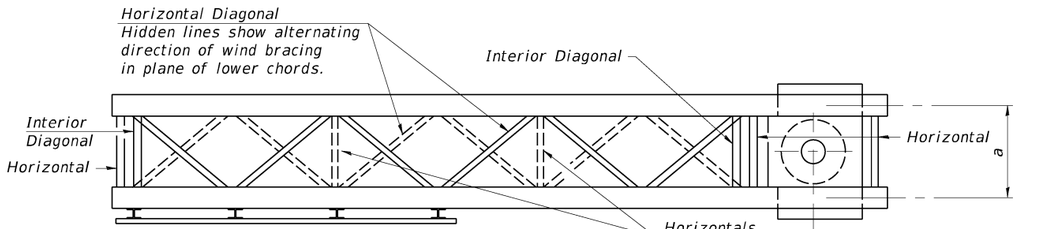

PLAN

(Walkway not shown)

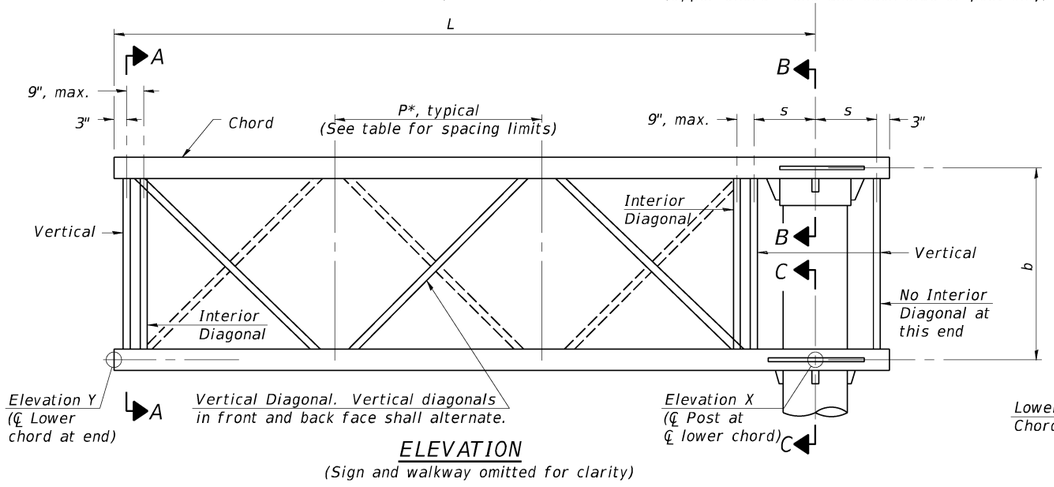

ELEVATION

(Sign and walkway omitted for clarity)

TYPICAL TRUSS UNIT

For Section B-B and Section C-C, see Base Sheet 0SC-A-3.

Note:
There are twice as many horizontal diagonals as there are vertical diagonals.

TRUSS UNIT TABLE

Truss Type	Dimension "a"	Dimension "b"	Dimension "s"	Limits for Panel Spacing (P)*	Up. & Low. Chord		Verticals; Horizontals; Vertical, Horizontal, and Interior Diagonals	
					O.D.	Wall	O.D.	Wall
I-C-A	24"	54"	16"	36" min. to 48" max.	5"	5/16"	2½"	5/16"
II-C-A	36"	66"	21"	42" min. to 54" max.	6½"	5/16"	3¼"	5/16"
III-C-A (35' Max.)	36"	84"	21"	48" min. to 66" max.	7"	3/8"	3½"	3/8"
III-C-A (>35' to 40')	36"	84"	21"	48" min. to 66" max.	8"	3/8"	3½"	3/8"

$$*P = \frac{L - s - 3"}{\#\ Panels}$$

Structure Number	Station	Truss Type	Design Length (L)	Number of Panels Per Unit	Panel Length (P)*
1C056S047R128.0	128+00.00	III-C-A	38'-6"	8	4'-6¾"
1C056S047L133.0	132+98.00	III-C-A	40'-0"	8	4'-9"
1C056S047R135.8	135+75.00	II-C-A	29'-0"	6	4'-6"
1C056S047L141.0	140+95.00	III-C-A	34'-0"	6	5'-4"
1C056S047R181.2	181+15.00	III-C-A	40'-0"	8	4'-9"
1C056S047L186.2	186+15.00	III-C-A	34'-0"	6	5'-4"

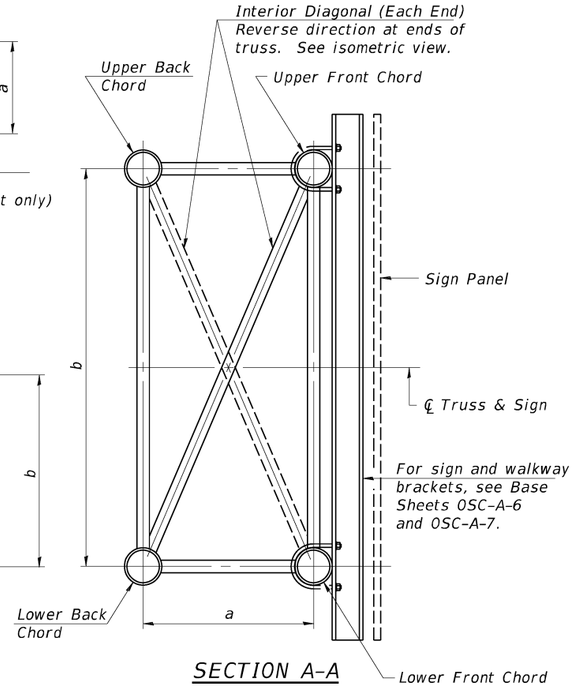

SECTION A-A

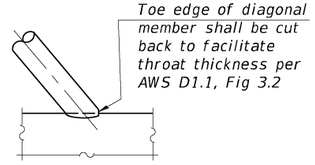

DETAIL A

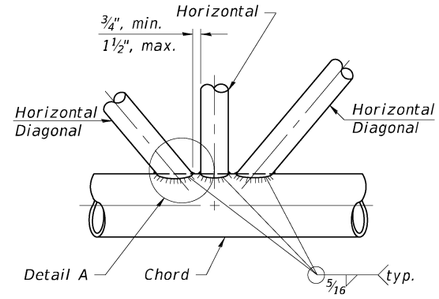

TRUSS INTERIOR JOINT DETAIL

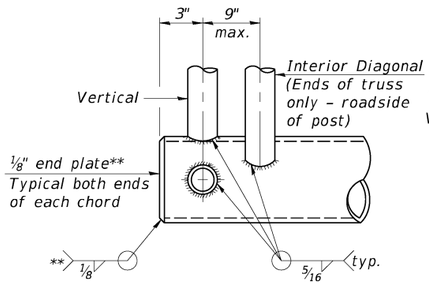

CANTILEVER END JOINT DETAIL

** Contractor may alternatively use standard aluminum drive-fit cap to close ends. ½" Ø Drain hole in end plate / drive-fit cap.

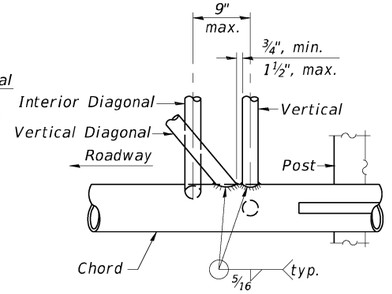

POST END JOINT DETAIL

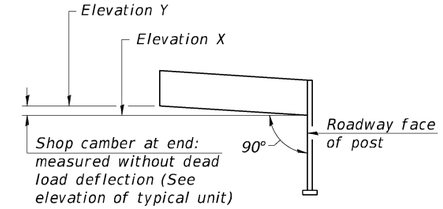

CAMBER DIAGRAM

(For Fabrication Only)

SHOP CAMBER TABLE

Unit Length (L)	Shop Camber at End
15'	1½"
16'-17'	1¾"
18'-20'	2"
21'-22'	2¼"
23'-25'	2½"
26'-27'	2¾"
28'-30'	3"
31'-32'	3¼"
33'-35'	3½"
36'-37'	4"
38'-40'	4½"

ISOMETRIC VIEW
TYPICAL TRUSS UNIT

ASTM B221 Alloy 6061 Temper T6

0SC-A-2

2-17-2017

AECOM
303 EAST WACKER DRIVE, SUITE 1400
CHICAGO, IL 60601-5276
PHONE: (312) 373-7700 FAX: (312) 373-6800

USER NAME = ButtM	DESIGNED - MB	REVISED -	
	CHECKED - AM	REVISED -	
PLOT SCALE = N.T.S.	DRAWN - MB	REVISED -	
PLOT DATE = 02/06/2025	CHECKED - ATB	REVISED -	

STATE OF ILLINOIS
DEPARTMENT OF TRANSPORTATION

CANTILEVER SIGN STRUCTURES – TRUSS DETAILS
ALUMINUM TRUSS & STEEL POST

SHEET NO. 2 OF 9 SHEETS

F.A.P. RTE.	SECTION	COUNTY	TOTAL SHEETS	SHEET NO.
326	2024-1052-N,C,SW,FL	MCHENRY	941	661
		CONTRACT NO. 62X94		
		ILLINOIS FED. AID PROJECT		

MODEL: Sheet
FILE NAME: pw:\\aecom-na-pw.bentley.com:AECOM_DS21_NA_2020\Documents\60632011-IL-417900-CAD1910_CAD\03_SHEETS\Structural\Overhead Sign Structures\D160X17-CSS-002-TrussDet.dgn

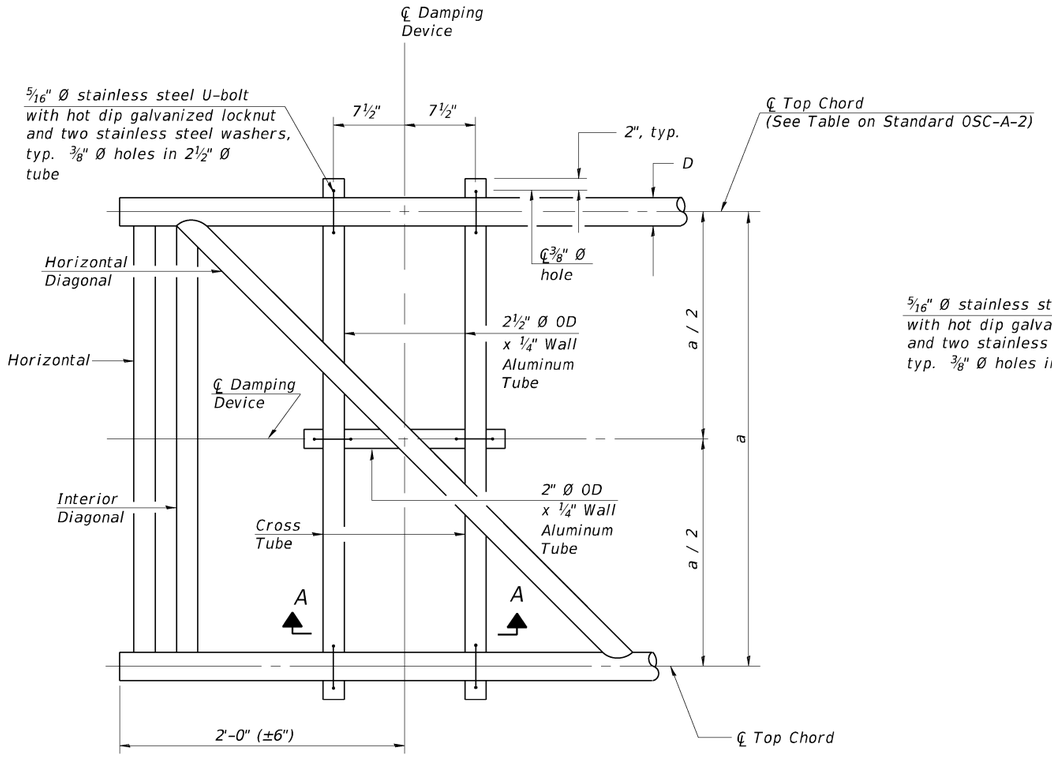

PLAN DETAIL

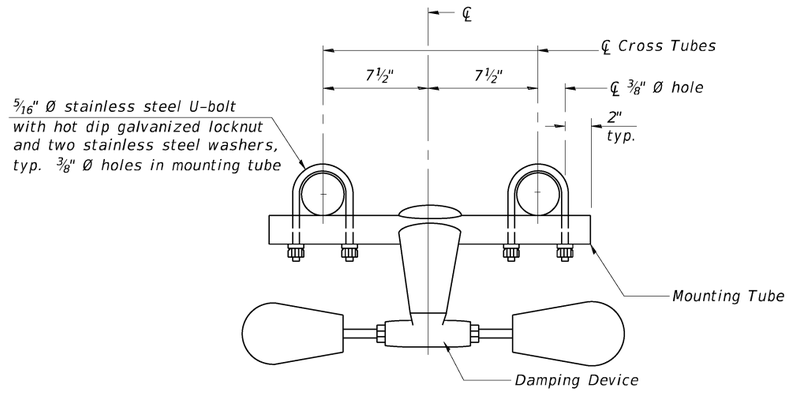

TRUSS DAMPING DEVICE CONNECTION DETAIL

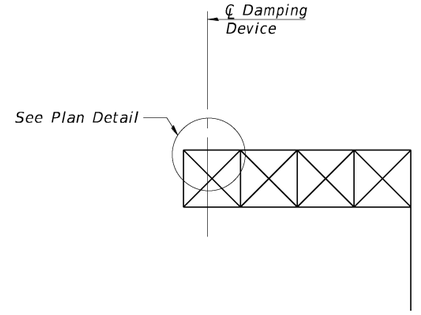

ELEVATION

Aluminum Cantilever Sign Structure

GENERAL NOTES

Damper: One damper per truss. (31 lbs. Stockbridge-Type Aluminum-29" minimum between ends of weights)

Materials: Aluminum tubes shall be ASTM B221 alloy 6061 temper T6

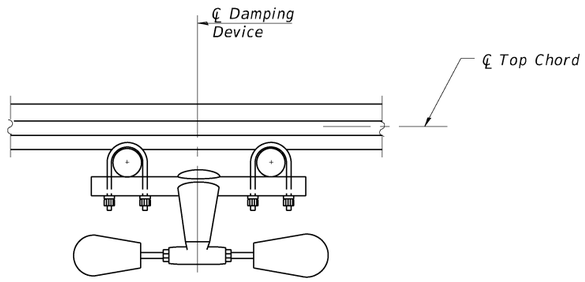

SECTION A-A

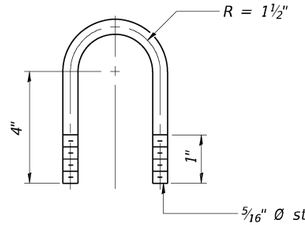

DAMPING DEVICE MOUNTING TUBE U-BOLT DETAIL

(Typical)

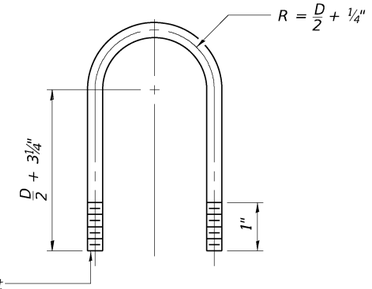

TOP CHORD TO CROSS TUBE U-BOLT DETAIL

(Typical)

0SC-A-D 2-17-2017

AECOM
303 EAST WACKER DRIVE, SUITE 1400
CHICAGO, IL 60601-5276
PHONE: (312) 373-7700 FAX: (312) 373-6800

USER NAME = ButtM	DESIGNED - MB	REVISED -
	CHECKED - AM	REVISED -
PLOT SCALE = N.T.S.	DRAWN - MB	REVISED -
PLOT DATE = 02/06/2025	CHECKED - ATB	REVISED -

STATE OF ILLINOIS
DEPARTMENT OF TRANSPORTATION

CANTILEVER SIGN STRUCTURE
DAMPING DEVICE
SHEET NO. 3 OF 9 SHEETS

F.A.P. RTE.	SECTION	COUNTY	TOTAL SHEETS	SHEET NO.
326	2024-1052-N,C,SW,FL	MCHENRY	941	662
		CONTRACT NO. 62X94		
		ILLINOIS	FED. AID PROJECT	

MODEL: Sheet
FILE NAME: pw:\\aecom-na-pw.bentley.com:AECOM_D521_NA_2020\Documents\60632011-IL-47\90D-CAD\91D_CAD\03_SHEETS\StructuralOverhead Sign Structures\D160X17-CSS-003-DampDevice.dgn

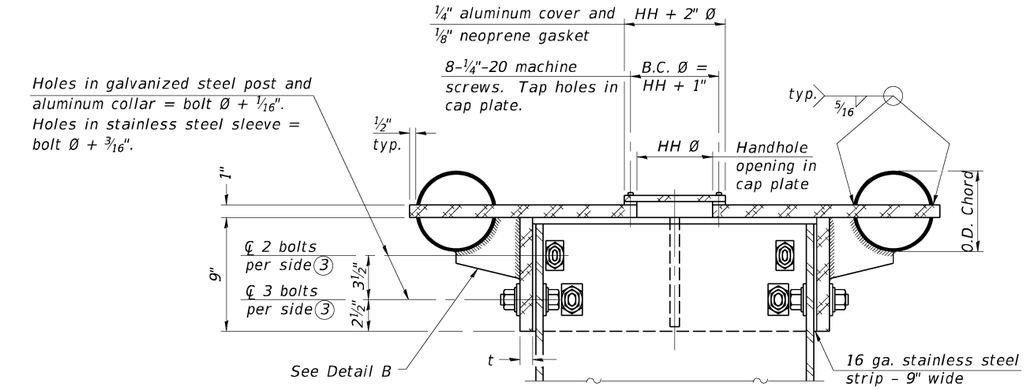

SECTION B–B

Bolts, washers (including contoured washers), and locknuts shall be stainless steel.

④ Collar I.D. shall be manufactured to correspond to O.D. of actual galvanized post and stainless steel sleeve plus ⅛" (±1/16"). Maximum gap between post and collar at any location equals ⅛" before tightening bolts.

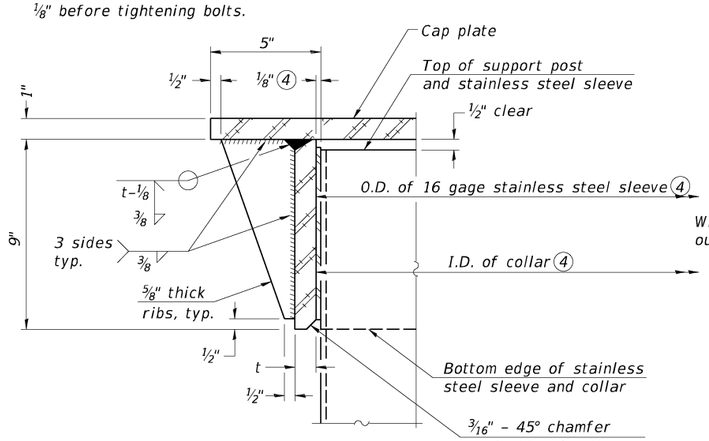

DETAIL A

(Two locations)

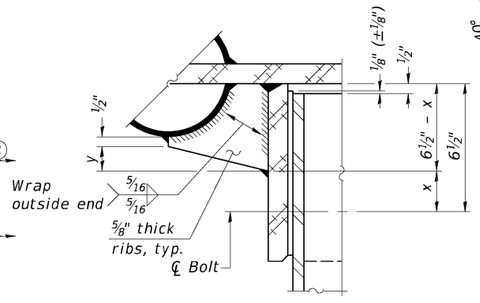

DETAIL B

Two locations
(For details not shown, see Detail C)

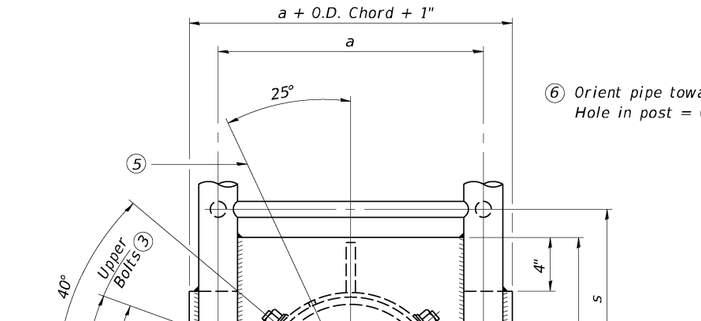

PLAN VIEW – TOP OF COLUMN

⑤ Optional full penetration weld in collar.
(Two locations maximum....(180° apart)....X-ray or UT 100%)

⑥ Orient pipe toward walkway side.
Hole in post = O.D. pipe + ⅛".

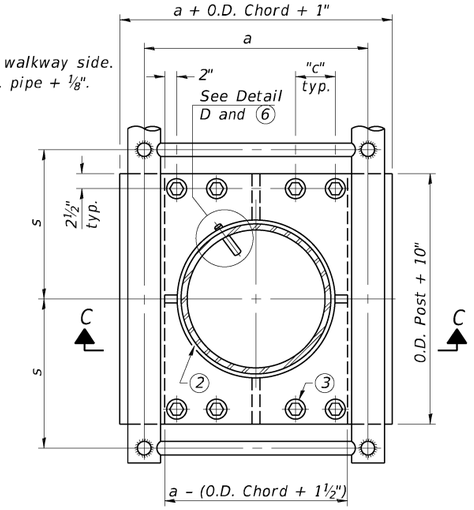

SECTION THRU POST ABOVE LOWER CHORDS

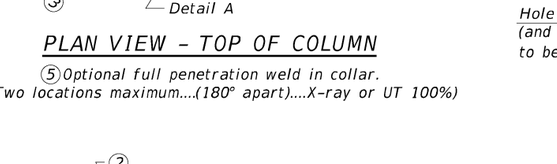

SECTION C–C

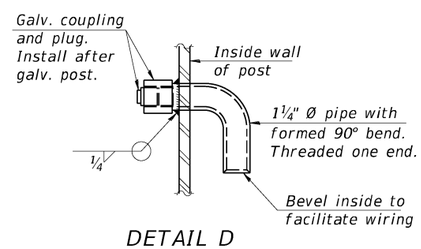

DETAIL D

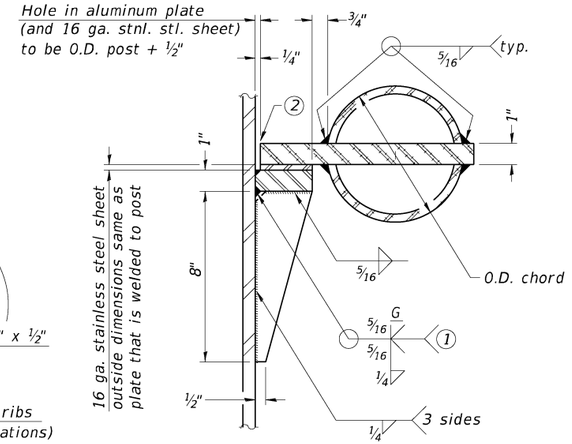

DETAIL C

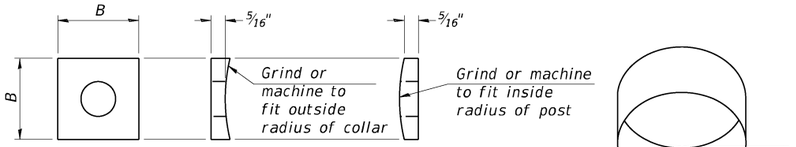

CONTOURED WASHERS

Bolt Size	Contoured Washers	
	Hole Dia.	B
⅞"	1"	2½"
1"	1⅛"	3"
1¼"	1⅜"	3¼"

DETAIL OF STAINLESS STEEL SLEEVE

Weld to post after galvanizing.
(Prepare post surface to insure tight, uniform fit and allow welding.)
Welds to be 1½" long at 6" cts.
along top edge and at ¼" opening.

Truss Type	Post Size	Upper & Lower Connection Bolt Diameter ③	Lower Juncture Bolt Spacing Dimension "c" ③	Opening in Cap Plate "HH"	Collar Thickness (t)	Side Ribs	
						x	y
I–C–A	16" Ø (83#/')	⅞"	3¼"	8"	⅝"	1¾"	2¼"
II–C–A	24" Ø (125#/')	1"	3½"	12"	⅞"	2"	1¼"
III–C–A (35' max.)	24" Ø (125#/')	1¼"	3½"	12"	⅞"	2"	1"
III–C–A (>35' to 40')	24" Ø (171#/')	1¼"	3½"	12"	⅞"	2"	1"

① Grind top if required to fully seat aluminum plate and stainless steel sheet.

② After tightening lower connection bolts, fill gap with non-hardening, silicone caulk suitable for exterior exposure and acceptable to the Engineer. Cost is included in Overhead Sign Structure Cantilever.

③ Upper and lower connection bolts in collar and bolts at lower chord connection shall be high strength with matching locknuts. Connection bolts shall have 2 stainless steel flat washers each.

OSC–A–3 2-17-2017

AECOM
303 EAST WACKER DRIVE, SUITE 1400
CHICAGO, IL 60601-5276
PHONE: (312) 373-7700 FAX: (312) 373-6800

USER NAME = ButtM	DESIGNED - MB	REVISED -	
	CHECKED - AM	REVISED -	
PLOT SCALE = N.T.S.	DRAWN - MB	REVISED -	
PLOT DATE = 02/06/2025	CHECKED - ATB	REVISED -	

STATE OF ILLINOIS
DEPARTMENT OF TRANSPORTATION

CANTILEVER SIGN STRUCTURES – JUNCTURE DETAILS
ALUMINUM TRUSS & STEEL POST
SHEET NO. 4 OF 9 SHEETS

F.A.P. RTE.	SECTION	COUNTY	TOTAL SHEETS	SHEET NO.
326	2024-1052-N,C,SW,FL	MCHENRY	941	663
		CONTRACT NO. 62X94		
	ILLINOIS FED. AID PROJECT			

MODEL: Sheet
FILE NAME: pw:\\aecom-na-pw.bentley.com:AECOM DS21_NA_2020\Documents\60632011-IL-47190D-CAD910 CAD\03_SHEETS\StructuralOverhead Sign Structures\D160X17-CSS-004-JunctureDet.dgn

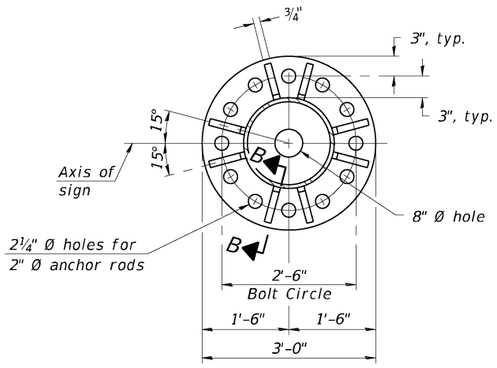

SECTION A-A

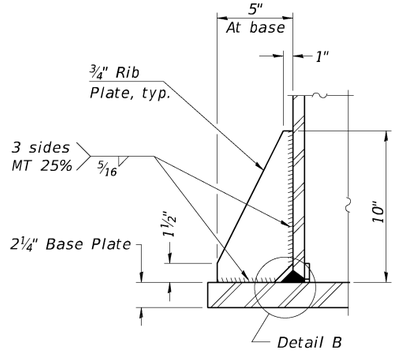

SECTION B-B

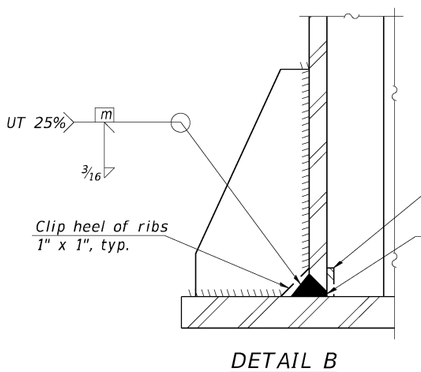

DETAIL B

(Typical rib)

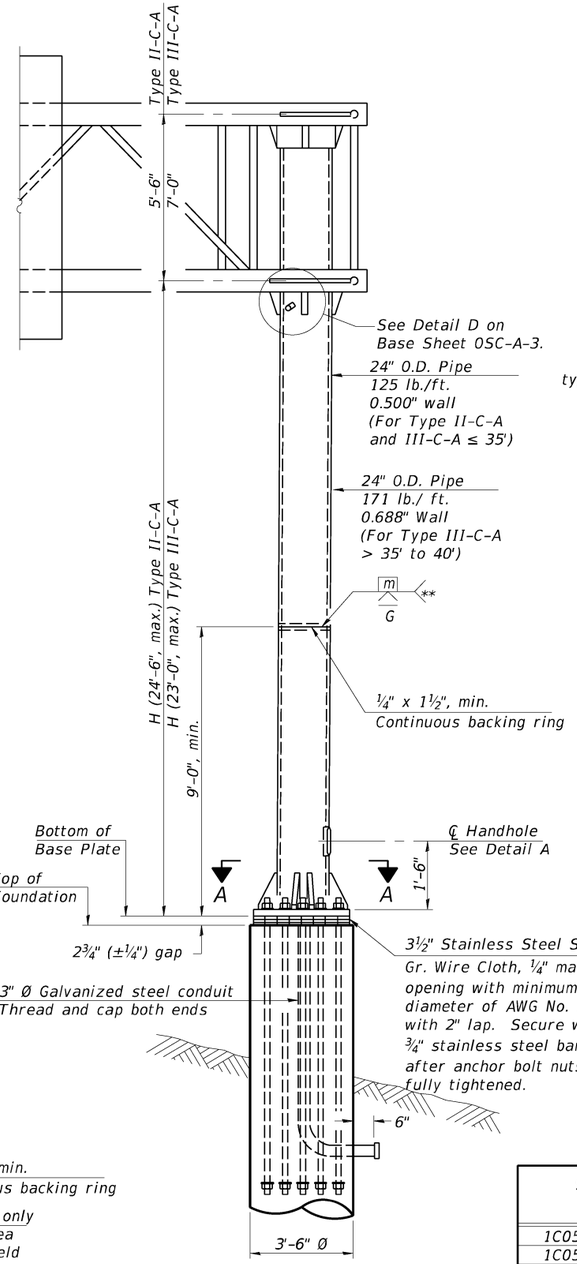

FRONT ELEVATION

For Foundation Details see Base Sheet 0SC-A-9.

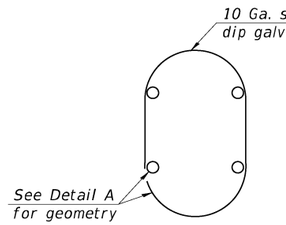

HANDHOLE COVER

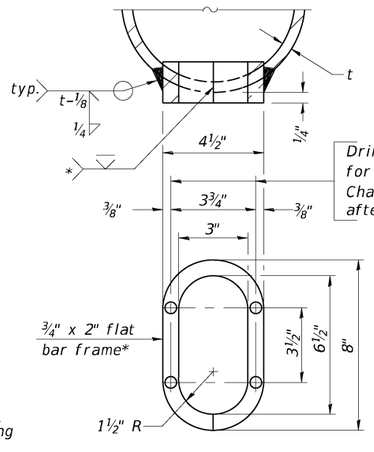

Provide 8" x 4½" cover. Outside corners = 2¼" radius. Provide 4-5/16" Ø holes in cover for ¼" - 20 round head hot dip galvanized or stainless steel machine screws. (See cover details.)

DETAIL A

* Bent bars may be butt welded top and bottom or bottom only. In lieu of fabricated handhole frame as shown, may cut from 2" plate (rolling direction vertical). All cut faces to be ground to ANSI Roughness of 500µ in or less.

** Butt welded joint in post is only allowed for post heights (H) over 20 ft. in length. If used, weld procedure must be preapproved by Engineer and joint shall receive 100% RT or UT (tension criteria) at Contractor's expense.

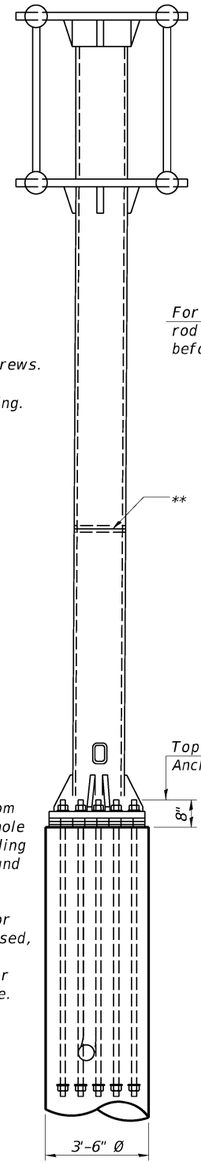

SIDE ELEVATION

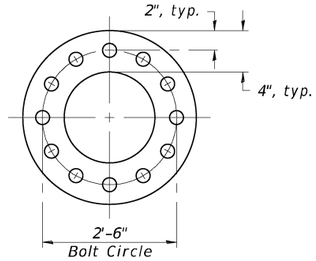

SUGGESTED POSITIONING PLATE

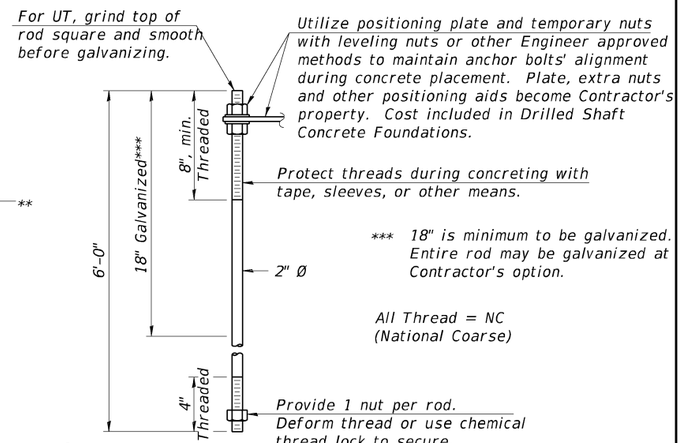

ANCHOR ROD DETAIL

Anchor rods shall conform to ASTM F1554 Grade 105. Galvanize the upper 18" (minimum***) and associated AASHTO M291, Grade A, C or DH heavy hex nuts and hardened washers per AASHTO M232. No welding shall be permitted on rods. Provide a nut at bottom, a hexagon locknut and washer above base plate and a leveling nut and washer below base plate. Nuts shall each be tightened with 200 lb.-ft. minimum torque against base plate. Before or after threading, but before galvanizing, each anchor rod shall be ultrasonically tested (UT) by a Level II or III inspector, qualified in accord with ANSI guidelines, to insure no rejectable flaws exist in the upper 18" (tension criteria). Cost of testing included in Drilled Shaft Concrete Foundations.

Structure Number	Station	H
1C056S047R128.0	128+00.00	17'-1⅞"
1C056S047L133.0	132+98.00	16'-8⅝"
1C056S047R135.8	135+75.00	19'-3¾"
1C056S047L141.0	140+95.00	17'-7¾"
1C056S047R181.2	181+15.00	17'-2⅜"
1C056S047L186.2	186+15.00	17'-1½"

Note: "H" based on 15'-0" or actual sign height, whichever is greater.

0SC-A-5 2-17-2017

AECOM
303 EAST WACKER DRIVE, SUITE 1400
CHICAGO, IL 60601-5276
PHONE: (312) 373-7700 FAX: (312) 373-6800

USER NAME = ButtM	DESIGNED - MB	REVISED -
	CHECKED - AM	REVISED -
PLOT SCALE = N.T.S.	DRAWN - MB	REVISED -
PLOT DATE = 02/06/2025	CHECKED - ATB	REVISED -

STATE OF ILLINOIS
DEPARTMENT OF TRANSPORTATION

CANTILEVER SIGN STRUCTURES – TYPE II-C-A & III-C-A
TRUSS SUPPORT POST – ALUMINUM TRUSS & STEEL POST
SHEET NO. 5 OF 9 SHEETS

F.A.P. RTE.	SECTION	COUNTY	TOTAL SHEETS	SHEET NO.
326	2024-1052-N,C,SW,FL	MCHENRY	941	664
		CONTRACT NO. 62X94		
		ILLINOIS	FED. AID PROJECT	

MODEL: Sheet
FILE NAME: pw:\\aecom-na-pw.bentley.com:AECOM_DS21_NA_2020\Documents\60632011-IL-47990-CAD910_CAD103_SHEETS\Structural\Overhead Sign Structures\D160X17-CSS-005-TrussSupPost.dgn

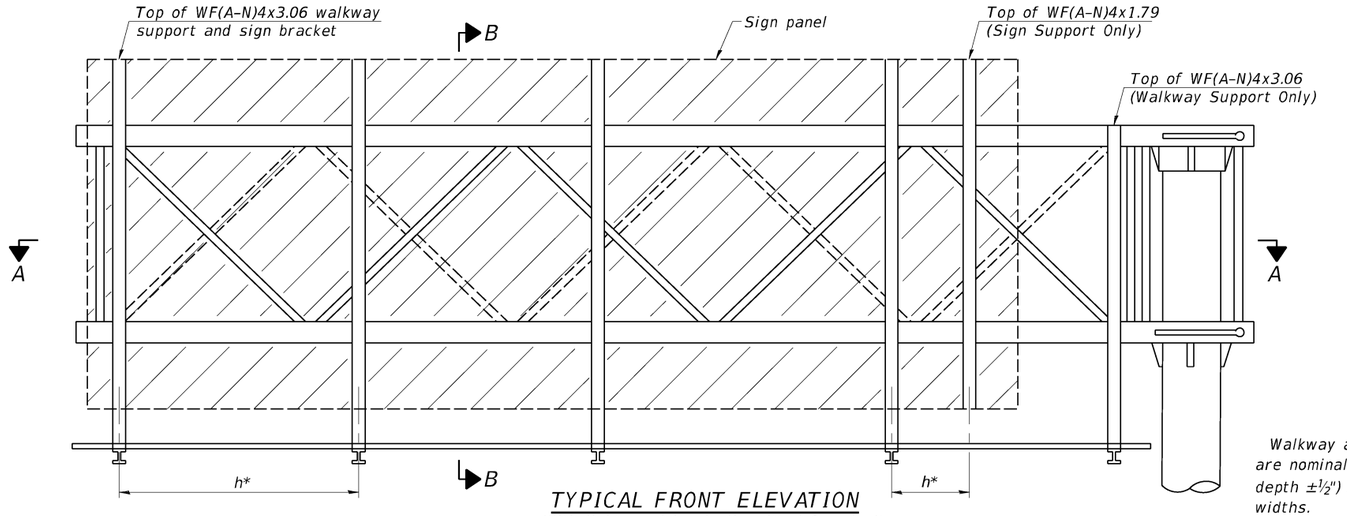

TYPICAL FRONT ELEVATION

With lights and handrail omitted for clarity.

Walkway and truss grating dimensions are nominal and may vary (width ±½", depth ±½") based on available standard widths.

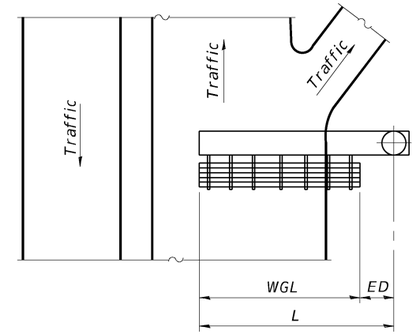

PLAN
WALKWAY AND HANDRAIL SKETCH

(Road plan beneath truss varies)

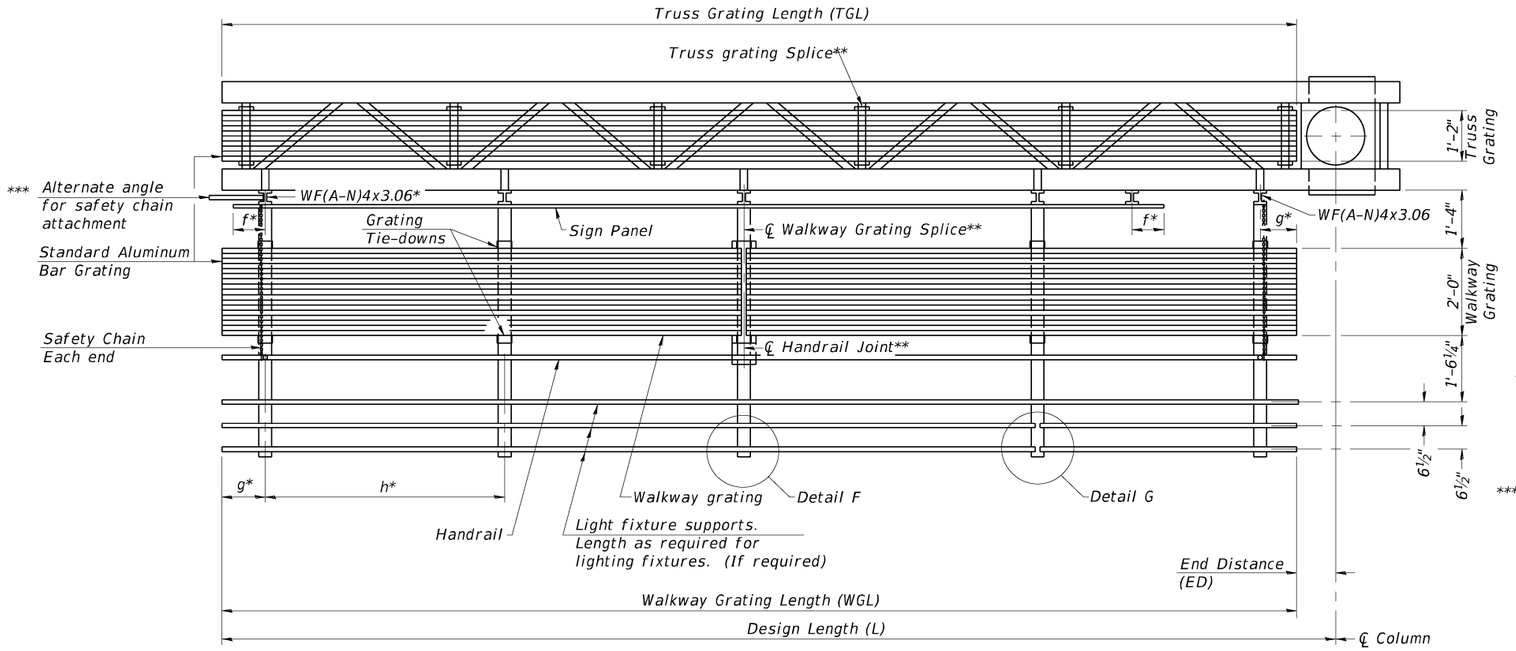

SECTION A–A

Truss grating to facilitate inspection shall run full length of cantilevers. Cost of truss grating is included in Overhead Sign Structure Cantilever.

Structure Number	Station	WGL	ED	TGL
1C056S047R128.0	128+00.00	N/A	N/A	37'–0"
1C056S047L133.0	132+98.00	N/A	N/A	38'–6"
1C056S047R135.8	135+75.00	N/A	N/A	27'–6"
1C056S047L141.0	140+95.00	N/A	N/A	32'–6"
1C056S047R181.2	181+15.00	N/A	N/A	38'–6"
1C056S047L186.2	186+15.00	N/A	N/A	32'–6"

Notes:

* Space walkway brackets WF(A–N)4x3.06 and sign brackets WF(A–N)4x1.79 for efficiency and within limits shown:

f = 12" maximum, 4" minimum (End of sign to ℄ of nearest bracket)
g = 12" maximum, 4" minimum (End of walkway to ℄ of nearest bracket)
h = 6'–0" maximum (℄ to ℄ sign and/or walkway support brackets, WF(A–N)4x1.79 or WF(A–N)4x3.06)

** Handrail and walkway grating shall span a minimum of three brackets between splices. Use and location of handrail joints or grating splices are optional, based on lengths needed and material availability.

$$TGL = L - \left(\frac{Post\ O.D.}{2} + 6"\right)$$

*** If walkway bracket at safety chain location is behind sign, add angle to bracket. See alternate safety chain attachment on base sheet 0SC–A–8

For details of sign placement, sign/walkway brackets, truss and walkway gratings, grating splices and Section B–B, see Base Sheet 0SC–A–7.
For details of handrail, handrail joint, safety chain and Details F and G, see Base Sheet 0SC–A–8.

BRACKET TABLE

WF(A–N)4x1.79 or WF(A–N)4x3.06
ASTM B308, Alloy 6061–T6

Sign Width		Number Brackets Required
Greater Than	Less Than or Equal To	
	8'–0"	2
8'–0"	14'–0"	3
14'–0"	20'–0"	4
20'–0"	26'–0"	5
26'–0"	32'–0"	6

WALKWAY: Walkway grating, walkway brackets, handrails, lighting and associated components shown in these plans on the traffic side of the sign structure/sign panel will not be installed with Contract 62X94. The truss grating and maintenance walkway behind the sign panel will be included with this pay item.

0SC–A–6 2–17–2017

AECOM
303 EAST WACKER DRIVE, SUITE 1400
CHICAGO, IL 60601–5276
PHONE: (312) 373–7700 FAX: (312) 373–6800

USER NAME = ButtM	DESIGNED - MB	REVISED -
	CHECKED - AM	REVISED -
PLOT SCALE = N.T.S.	DRAWN - MB	REVISED -
PLOT DATE = 02/06/2025	CHECKED - ATB	REVISED -

STATE OF ILLINOIS
DEPARTMENT OF TRANSPORTATION

CANTILEVER SIGN STRUCTURES – ALUMINUM WALKWAY
DETAILS – ALUMINUM TRUSS & STEEL POST

SHEET NO. 6 OF 9 SHEETS

F.A.P. RTE.	SECTION	COUNTY	TOTAL SHEETS	SHEET NO.
326	2024-1052-N,C,SW,FL	MCHENRY	941	665
		CONTRACT NO. 62X94		
	ILLINOIS	FED. AID PROJECT		

MODEL: Sheet
FILE NAME: pw:\\aecom-na-pw.bentley.com:AECOM DS21 NA 2020\Documents\60632011-IL-47\900-CAD\910 CAD\03 SHEETS\Structural\Overhead Sign Structures\D160X17-CSS-006-WalkwayDet1.dgn

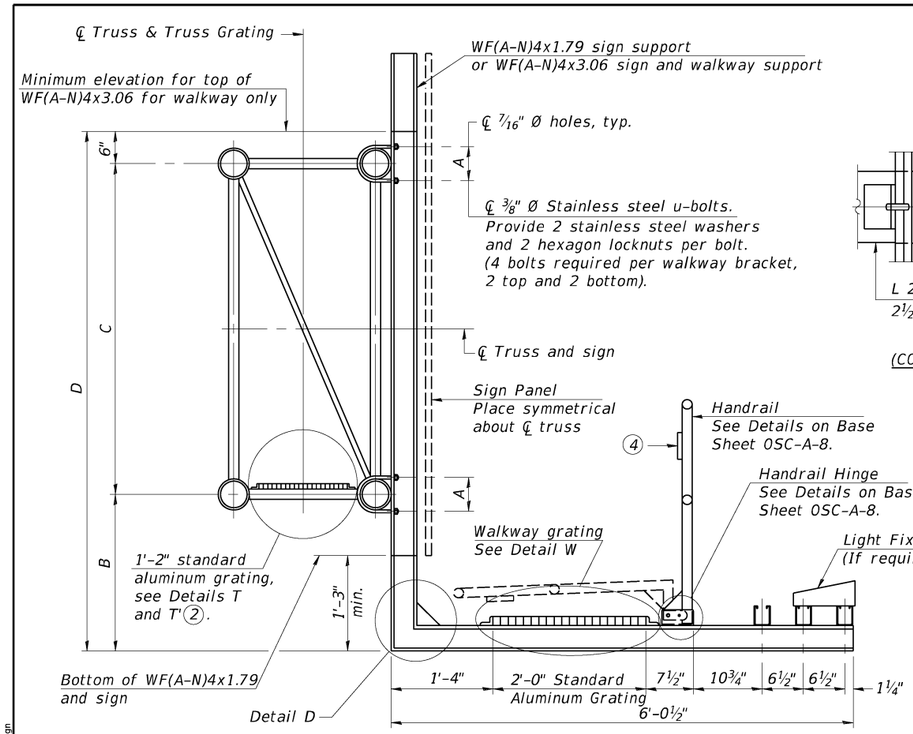

SECTION B–B

Sign shall be even with the top of the bracket, but it may extend no more than 6" above the top of the bracket for field adjustments.

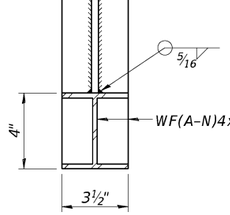

SECTION D–D

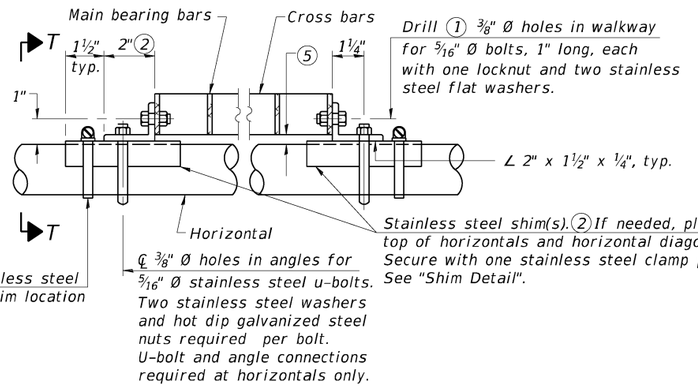

DETAIL T

(Continuous Truss grating)

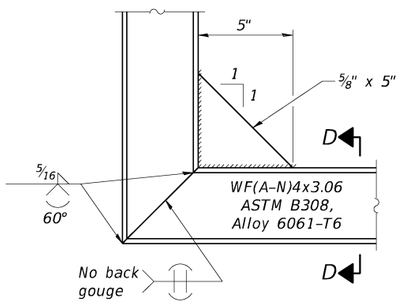

DETAIL D

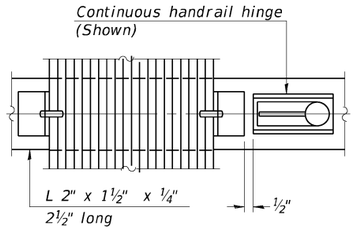

(CONTINUOUS WALKWAY GRATING)

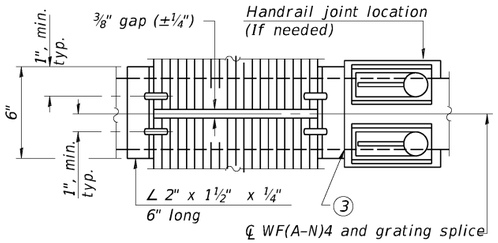

(AT WALKWAY GRATING SPLICE)

SECTION W–W

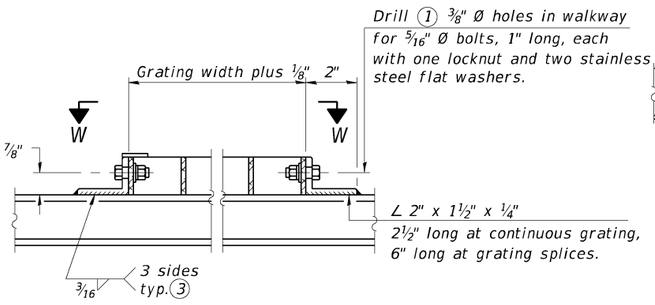

DETAIL W

(Walkway grating)

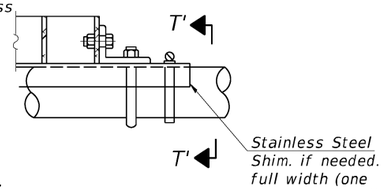

DETAIL T'

(Truss grating splice)

Details not shown same as Detail T. Alternate materials may be used subject to the Engineer's review and approval.

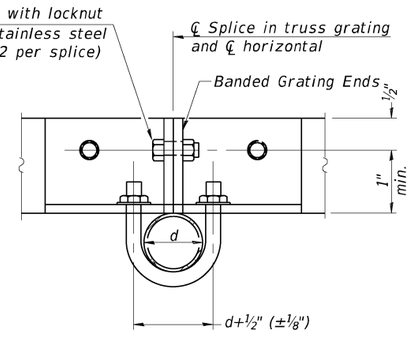

SECTION T–T

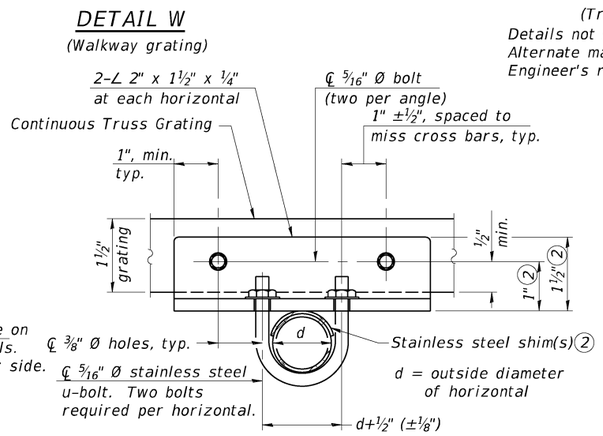

SECTION V–V

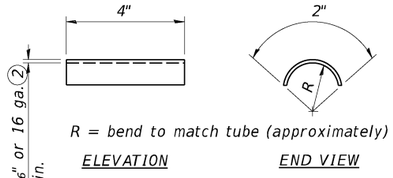

SHIM DETAIL

Structure Number	Station	A	(6) B	C	(6) D
1C056S047R128.0	128+00.00	8"	N/A	84"	N/A
1C056S047R133.0	132+98.00	8"	N/A	84"	N/A
1C056S047R135.8	135+75.00	6½"	N/A	66"	N/A
1C056S047R141.0	140+95.00	7"	N/A	84"	N/A
1C056S047R181.0	181+15.00	8"	N/A	84"	N/A
1C056S047R186.0	186+15.00	7"	N/A	84"	N/A

SPECIFICATIONS FOR STANDARD ALUMINUM GRATING

Main Bearing Bars (MBB) shall be 3/16" x 1½" on 1 3/16" centers and conform to ASTM B211 Alloy 6061–T6.

Cross bars (CB) shall be 3/16" x 1½" on 4" centers and conform to ASTM B221 Alloy 6063–T5 or 6061–T6.

OR

Aluminum Grating with modified "t" sections for main bearing bars shall meet the following requirements:

Main bars shall conform to ASTM B221 Alloy 6061–T6 and have a minimum section modulus equal to 0.0705 in.³ per bar, a depth of 1½", spaced on 1 3/16" centers.

Cross bars shall conform to ASTM B221 Alloy 6063–T5 or T–42 and spaced on 4" centers.

(1) Drilling holes in grating may be done in shop or field, based on Contractor's preference and subject to accurate alignment.

(2) Stainless steel shims shall be placed as shown in Detail T if needed to compensate for alignment variations between horizontal and diagonal pipes beyond adjustment provided by angles. Thicker shims may be used subject to shims performing properly.

(3) If Handrail Joint present, weld angle to WF(A–N)4 and ¼" extension bars. (See Base Sheet 0SC–A–8.)

(4) PL 1/8" x ½" x 2" welded to handrail posts to protect locations that contact grating.

(5) Tube to grating gap may vary from 0 to ½", max. to align walkway, allow for camber, etc.

(6) Based on actual sign height, Ds, given on 0SC–A–1.

WALKWAY: Walkway grating, walkway brackets, handrails, lighting and associated components shown in these plans on the traffic side of the sign structure/sign panel will not be installed with Contract 62X94. The truss grating and maintenance walkway behind the sign panel will be included with this pay item.

0SC–A–7

2–17–2017

AECOM
303 EAST WACKER DRIVE, SUITE 1400
CHICAGO, IL 60601-5276
PHONE: (312) 373-7700 FAX: (312) 373-6800

USER NAME = ButtM	DESIGNED - MB	REVISED -	
	CHECKED - AM	REVISED -	
PLOT SCALE = N.T.S.	DRAWN - MB	REVISED -	
PLOT DATE = 02/06/2025	CHECKED - ATB	REVISED -	

STATE OF ILLINOIS
DEPARTMENT OF TRANSPORTATION

CANTILEVER SIGN STRUCTURES – WALKWAY DETAILS
ALUMINUM TRUSS & STEEL POST

SHEET NO. 7 OF 9 SHEETS

F.A.P. RTE.	SECTION	COUNTY	TOTAL SHEETS	SHEET NO.
326	2024-1052-N,C,SW,FL	MCHENRY	941	666
		CONTRACT NO. 62X94		
		ILLINOIS	FED. AID PROJECT	

MODEL: Sheet
FILE NAME: pw:\\aecom-na-pw.bentley.com:AECOM_DS21_NA_2020\Documents\60632011-IL-47\900-CAD\910_CAD\03_SHEETS\StructuralOverhead Sign Structures\D160X17-CSS-007-Walkway\Det2.dgn

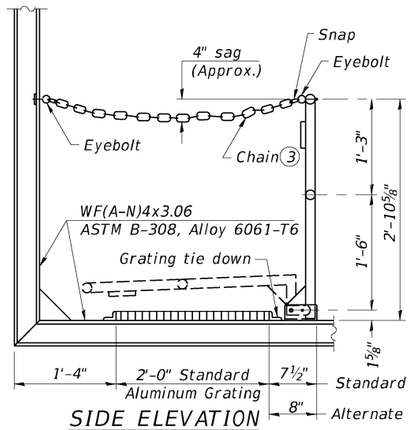

SIDE ELEVATION

(Showing Safety Chain W/O Sign)

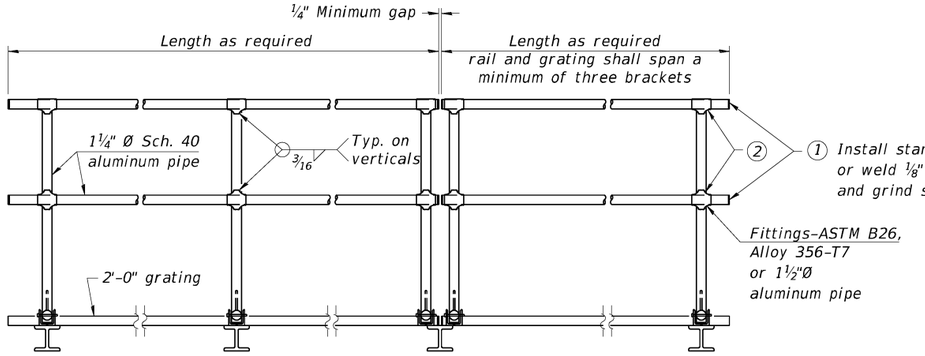

FRONT ELEVATION

(1) Install standard force-fit end caps or weld ⅛" end plates with ⅛" c.f.w. and grind smooth. (All rail ends)

(2) Horizontal handrail member shall be continuous thru fitting. Provide 7/16" Ø hole in fitting for ⅜" Ø bolt. Field drill 7/16" Ø hole in horizontal rail member. Provide locknut and two stainless steel washers for bolt. (Use 5/16" eyebolts in 7/16" Ø holes on top rail at ends only.)

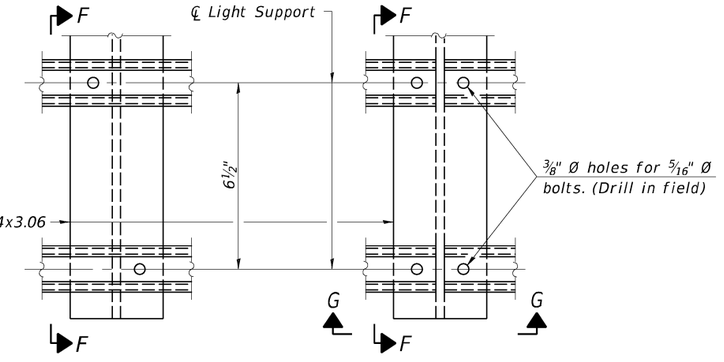

DETAIL F

DETAIL G

HANDRAIL DETAILS

Handrail pipe shall be ASTM B241 or B429, Alloy 6063-T6 or Alloy 6061-T6.

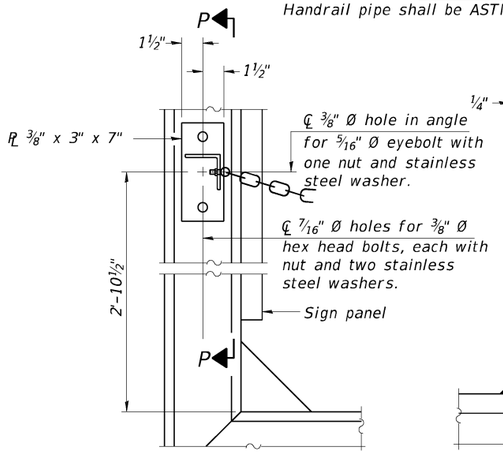

ALTERNATE SAFETY CHAIN ATTACHMENT

(With Sign Present)

Items not shown same as "Side Elevation" of "Handrail Details"

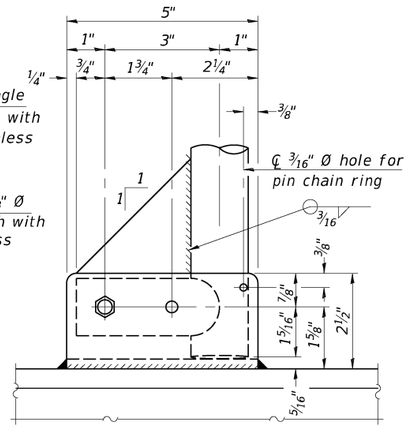

SIDE ELEVATION

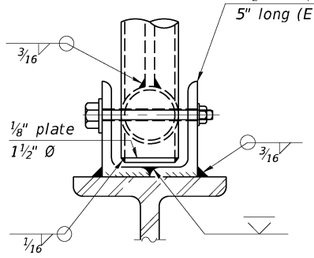

FRONT ELEVATION

Details not shown same as "ELEVATION" at right.

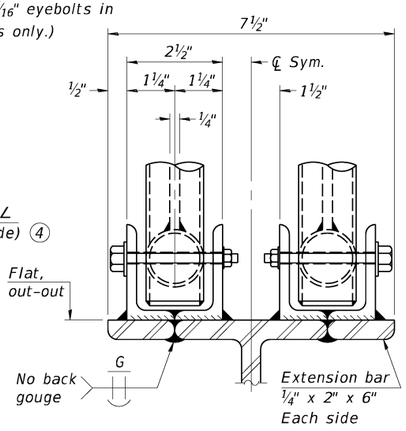

ELEVATION AT HANDRAIL JOINT (4)

Details not shown same as "FRONT ELEVATION"

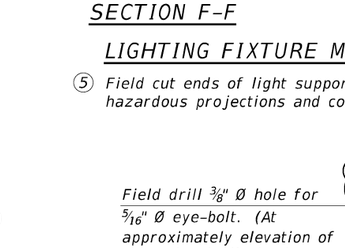

SECTION F-F

SECTION G-G

LIGHTING FIXTURE MOUNTS (IF REQUIRED)

(5) Field cut ends of light support channels shall be free of burrs or hazardous projections and coated with zinc-rich primer or equivalent.

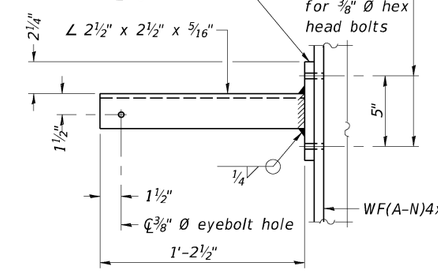

SECTION P-P

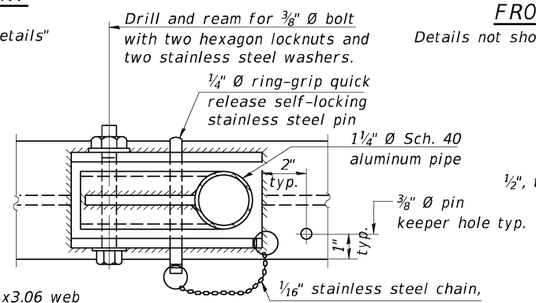

PLAN

DETAIL E HANDRAIL HINGE

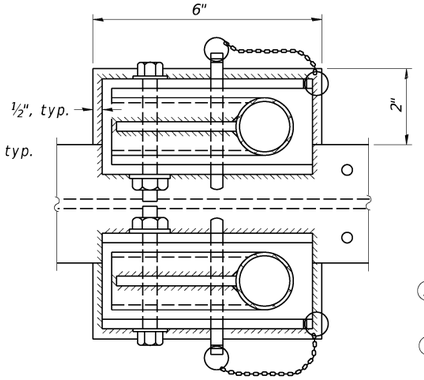

PLAN AT HANDRAIL JOINT

Details not shown same as "PLAN"

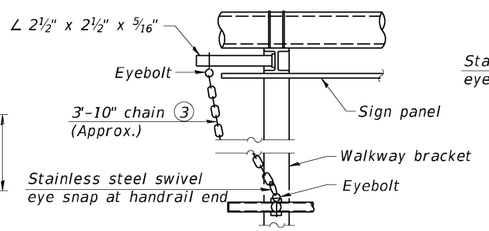

ALTERNATE SAFETY CHAIN ATTACHMENT

Details not shown similar to "Safety Chain" Details

(Walkway omitted for clarity)

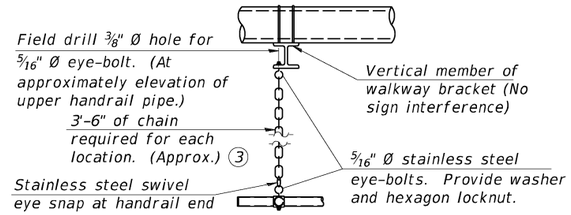

SAFETY CHAIN

One required for each end of each walkway.

WALKWAY: Walkway grating, walkway brackets, handrails, lighting and associated components shown in these plans on the traffic side of the sign structure/sign panel will not be installed with Contract 62X94. The truss grating and maintenance walkway behind the sign panel will be included with this pay item.

(3) 3/16" Type 304L stainless steel chain, approximately 12 links per foot.

(4) Extrusions may be used in lieu of the details shown, with approval of the Engineer.

OSC-A-8 2-17-2017

AECOM
303 EAST WACKER DRIVE, SUITE 1400
CHICAGO, IL 60601-5276
PHONE: (312) 373-7700 FAX: (312) 373-6800

USER NAME = ButtM	DESIGNED - MB	REVISED -	
	CHECKED - AM	REVISED -	
PLOT SCALE = N.T.S.	DRAWN - MB	REVISED -	
PLOT DATE = 02/06/2025	CHECKED - ATB	REVISED -	

STATE OF ILLINOIS
DEPARTMENT OF TRANSPORTATION

CANTILEVER SIGN STRUCTURES – HANDRAIL DETAILS
ALUMINUM TRUSS & STEEL POST

SHEET NO. 8 OF 9 SHEETS

F.A.P. RTE.	SECTION	COUNTY	TOTAL SHEETS	SHEET NO.
326	2024-1052-N,C,SW,FL	MCHENRY	941	667
		CONTRACT NO. 62X94		
		ILLINOIS	FED. AID PROJECT	

MODEL: Sheet
FILE NAME: pw:\\aecom-na-pw.bentley.com:AECOM_DS21_NA_2020\Documents\60632011-IL-47900-CAD\910_CAD\03_SHEETS\Structural\Overhead Sign Structures\D160X17-CSS-008A-HandrailDet.dgn

* Grind anchor rod to bright finish at ground clamp location before installing clamp.

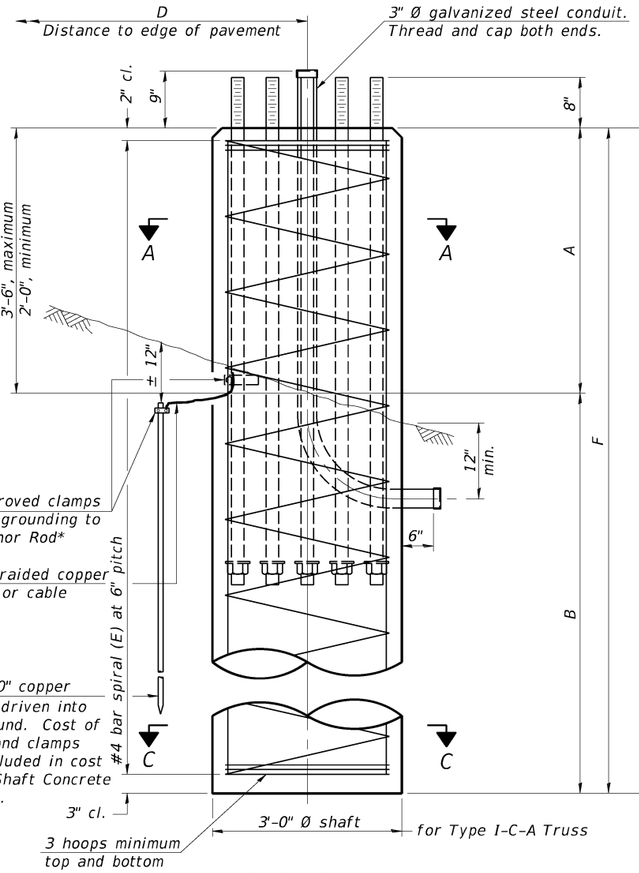

ELEVATION

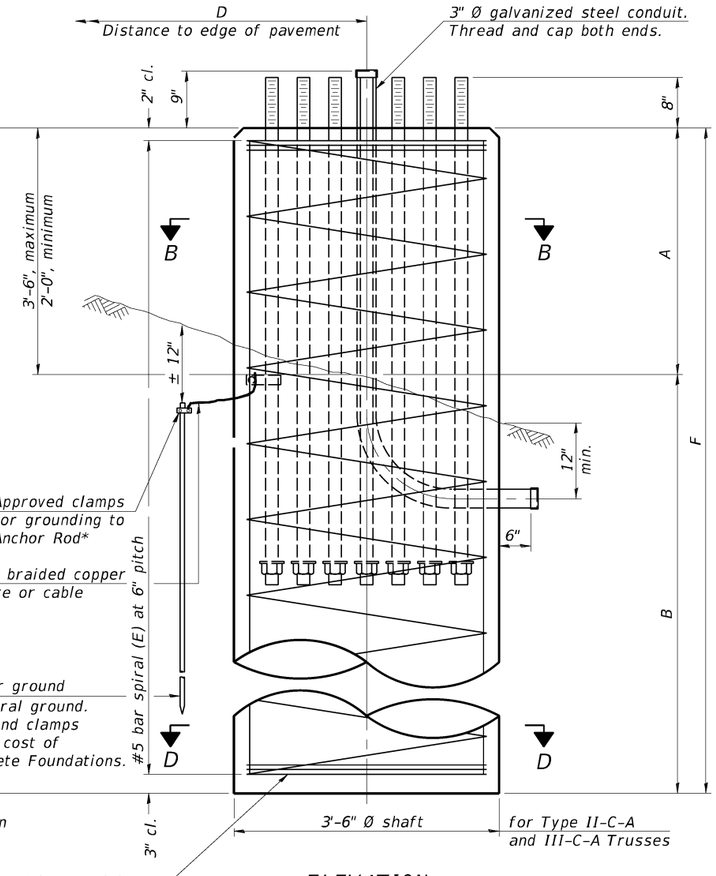

ELEVATION

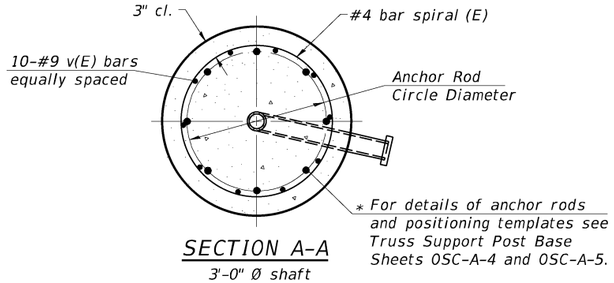

SECTION A-A
3'-0" Ø shaft

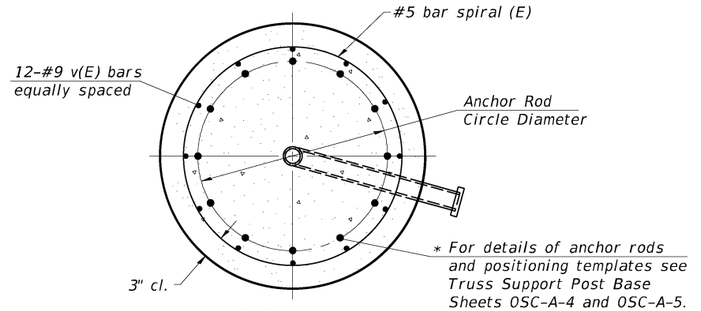

SECTION B-B
3'-6" Ø shaft

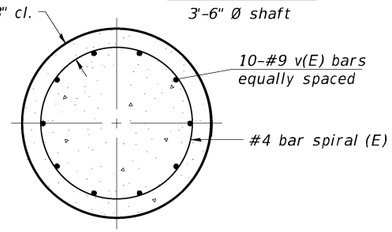

SECTION C-C
3'-0" Ø shaft

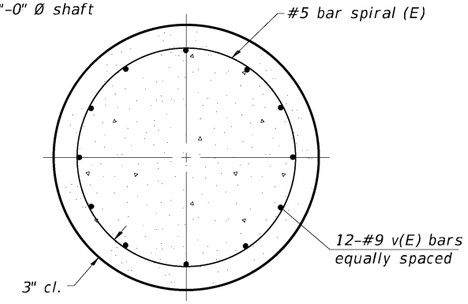

SECTION D-D
3'-6" Ø shaft

NOTES:

The foundation dimensions shown in the Foundation Design Table are based on the presence of mostly cohesive soils with an average Unconfined Compressive Strength (Qu) of at least 1.25 tsf, which must be determined by previous soil investigations at the jobsite. When other conditions are indicated, the boring data will be included in the plans and the foundation dimensions shown in the Foundation Data Table will be the result of site specific designs.

If the conditions encountered are different than those indicated, the Contractor shall notify the Engineer to determine if the foundation dimensions need to be modified. If dimensions "B" or "F" are revised by more than 12" by the Contractor, "as-built" plans shall be prepared and submitted to the District Bureau of Operations for future reference.

No sonotubes or decomposable forms shall be used below the lower conduit entrance. Permanent metal forms or other shielding may not be left in place below that elevation without the Engineer's written permission.

Concrete shall be placed monolithically, without construction joints.

Backfill shall be placed per Article 502 of Standard Specification and prior to erection of support column.

A normal surface finish followed by a Concrete Sealer application will be required on concrete surfaces above the lowest elevation 6" below finished ground line. Cost included in "Drilled Shaft Concrete Foundation".

FOUNDATION DESIGN TABLE

Truss Type	Post Base Sheet	Maximum Cantilever Length (ft)	Maximum Total Sign Area (sq ft)	Shaft Diameter (in)	"B" Depth (ft)	Anchor Rods		Anchor Rod Circle Diameter (in)
						No.	Diameter (in)	
I-C-A	OSC-A-4	25	170	3.0	16.0	8	2	22
II-C-A	OSC-A-5	30	170	3.5	17.0	12	2	30
II-C-A	OSC-A-5	30	340	3.5	21.5	12	2	30
III-C-A	OSC-A-5	35	170	3.5	19.0	12	2	30
III-C-A	OSC-A-5	35	250	3.5	22.5	12	2	30
III-C-A	OSC-A-5	35	400	3.5	26.5	12	2	30
III-C-A	OSC-A-5	40	400	3.5	32.0	12	2	30

FOUNDATION DATA TABLE

Structure Number	Station	Truss Type	Shaft Diameter	Elevation Top	Elevation Bottom	Qu	A	B	F	Class DS Concrete Cubic Yards
1C056S047R128.0	128+00.00	III-C-A	3.5	933.70	900.20		3.5	30	33.5	11.9
1C056S047L133.0	132+98.00	III-C-A	3.5	932.82	899.32		3.5	30	33.5	11.9
1C056S047R135.8	135+75.00	II-C-A	3.5	928.80	908.30		3.5	17	20.5	7.3
1C056S047L141.0	140+95.00	III-C-A	3.5	927.74	905.24		3.5	19	22.5	8.0
1C056S047R181.2	181+15.00	III-C-A	3.5	891.28	857.78		3.5	30	33.5	11.9
1C056S047L186.2	186+15.00	III-C-A	3.5	890.41	864.91		3.5	22	25.5	9.1

OSC-A-9 2-17-2017

AECOM
303 EAST WACKER DRIVE, SUITE 1400
CHICAGO, IL 60601-5276
PHONE: (312) 373-7700 FAX: (312) 373-6800

USER NAME = ButtM	DESIGNED - MB	REVISED -	
	CHECKED - AM	REVISED -	
PLOT SCALE = N.T.S.	DRAWN - MB	REVISED -	
PLOT DATE = 02/06/2025	CHECKED - ATB	REVISED -	

STATE OF ILLINOIS
DEPARTMENT OF TRANSPORTATION

CANTILEVER SIGN STRUCTURES – DRILLED SHAFT
ALUMINUM TRUSS & STEEL POST
SHEET NO. 9 OF 9 SHEETS

F.A.P. RTE.	SECTION	COUNTY	TOTAL SHEETS	SHEET NO.
326	2024-1052-N,C,SW,FL	MCHENRY	941	668
		CONTRACT NO. 62X94		
	ILLINOIS FED. AID PROJECT			

MODEL: Sheet
FILE NAME: pw:\\aecom-na-pw.bentley.com:AECOM_DS21_NA_2020\Documents\60632011-IL-47900-CAD\910_CAD\03_SHEETS\Structural\Overhead Sign Structures\D160X17-CSS-008-DrilledShaft.dgn

SIGN DETAIL

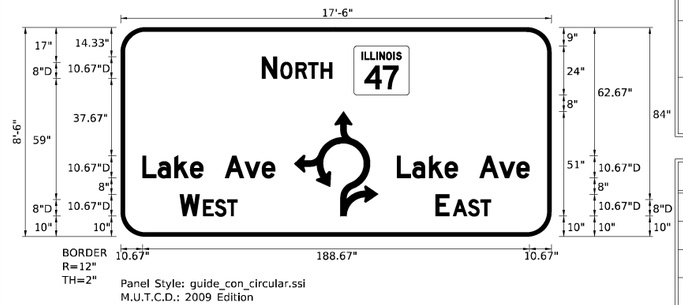

Panel Style: guide_con_circular.ssi
M.U.T.C.D.: 2009 Edition

SIGN NUMBER	NB-01-OH
WIDTH x HGHT.	17'-6" x 8'-6"
BORDER WIDTH	2"
CORNER RADIUS	12"
MOUNTING	Overhead
BACKGROUND	TYPE: Reflective
	COLOR: Green
LEGEND/BORDER	TYPE: Reflective
	COLOR: White/White

SYMBOL	ROT	X	Y	WID	HT
M1-I100A-2-32-15D	0	113.7	69	27	24
AR_Roundabout Custom	0	84.5	10	40.9	51

Panel Style: guide_con_circular.ssi
Dimensions are in inches.tenths
Letter locations are panel edge to lower left corner

LETTER POSITIONS (X)															LENGTH	SERIES/SIZE
N	O	R	T	H												D 2000
68.9	77.9	85.4	91.4	97.6											34.2	10.67,8
L	a	k	e		A	v	e									D 2000
10.7	18.1	26.2	33.9	40.2	50.9	60.5	68.9								64.6	10.67/8
L	a	k	e		A	v	e									D 2000
134.8	142.3	150.4	158	164.3	175	184.6	193								64.6	10.67/8
W	E	S	T													D 2000
28.9	40.2	46	52												28.1	10.67,8
E	A	S	T													D 2000
153.6	162	169.5	175.5												26.9	10.67,8

SIGN DETAIL

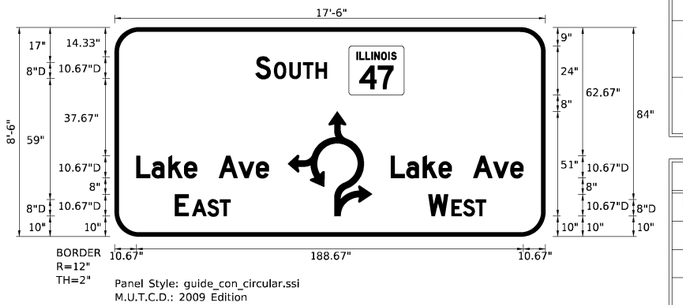

Panel Style: guide_con_circular.ssi
M.U.T.C.D.: 2009 Edition

SIGN NUMBER	SB-01-OH
WIDTH x HGHT.	17'-6" x 8'-6"
BORDER WIDTH	2"
CORNER RADIUS	12"
MOUNTING	Overhead
BACKGROUND	TYPE: Reflective
	COLOR: Green
LEGEND/BORDER	TYPE: Reflective
	COLOR: White/White

SYMBOL	ROT	X	Y	WID	HT
M1-I100A-2-32-15D	0	114.2	69	27	24
AR_Roundabout Custom	0	84.5	10	40.9	51

Panel Style: guide_con_circular.ssi
Dimensions are in inches.tenths
Letter locations are panel edge to lower left corner

LETTER POSITIONS (X)															LENGTH	SERIES/SIZE
S	O	U	T	H												D 2000
68.8	77.9	85.3	91.9	98.1											34.7	10.67,8
L	a	k	e		A	v	e									D 2000
10.7	18.1	26.2	33.9	40.2	50.9	60.5	68.9								64.6	10.67/8
L	a	k	e		A	v	e									D 2000
134.8	142.3	150.4	158	164.3	175	184.6	193								64.6	10.67/8
E	A	S	T													D 2000
29.5	37.9	45.3	51.4												26.9	10.67,8
W	E	S	T													D 2000
153	164.3	170.1	176.1												28.1	10.67,8

MODEL: Default
FILE NAME: pw:\\aecom-na-pw.bentley.com:AECOM_D521_NA_2020\Documents\60632011-IL-47900-CAD910_CAD\03_SHEETS\Civil\D160X17-sht-Sign-Det-01.dgn

AECOM
303 EAST WACKER DRIVE, SUITE 1400
CHICAGO, IL 60601-5276
PHONE: (312) 373-7700 FAX: (312) 373-6800

USER NAME = muniza	DESIGNED - MAP	REVISED -
	DRAWN - APA	REVISED -
PLOT SCALE = 20.0000 ' / in.	CHECKED - TJW	REVISED -
PLOT DATE = 2/7/2025	DATE -	REVISED -

STATE OF ILLINOIS
DEPARTMENT OF TRANSPORTATION

SIGNING DETAILS

SCALE: N.T.S. | SHEET 1 OF 5 SHEETS | STA. | TO STA.

F.A.P. RTE.	SECTION	COUNTY	TOTAL SHEETS	SHEET NO.
326	2024-1052-N,C,SW,FL	MCHENRY	941	669
		CONTRACT NO. 62X94		
	ILLINOIS	FED. AID PROJECT		

SIGN DETAIL

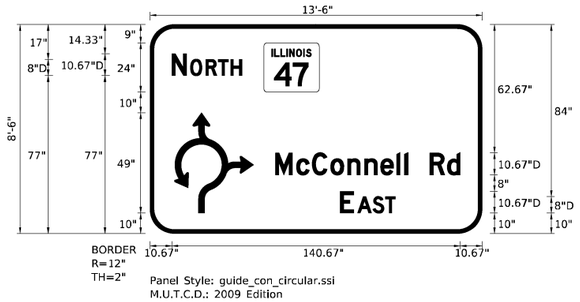

Panel Style: guide_con_circular.ssi
M.U.T.C.D.: 2009 Edition

SIGN NUMBER	NB-02-OH
WIDTH x HGHT.	13'-6" x 8'-6"
BORDER WIDTH	2"
CORNER RADIUS	12"
MOUNTING	Overhead
BACKGROUND	TYPE: Reflective
	COLOR: Green
LEGEND/BORDER	TYPE: Reflective
	COLOR: White/White

SYMBOL	ROT	X	Y	WID	HT
M1-I100A-2-32-15D	0	55.5	69	27	24
Roundabout Custom	0	11.9	10	38.6	49

Panel Style: guide_con_circular.ssi
Dimensions are in inches.tenths
Letter locations are panel edge to lower left corner

LETTER POSITIONS (X)															LENGTH	SERIES/SIZE
N	O	R	T	H												D 2000
10.7	19.7	27.2	33.3	39.4											34.2	10.67,8
M	c	C	o	n	n	e	l	l		R	d					D 2000
61.2	71.4	79.1	88.1	96.3	104.6	112.5	120.3	124.1	125.8	136.5	144.9				90.2	10.67/8
E	A	S	T													D 2000
92.8	101.2	108.7	114.7												26.9	10.67,8

SIGN DETAIL

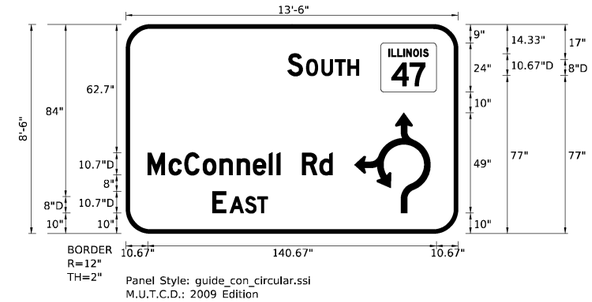

Panel Style: guide_con_circular.ssi
M.U.T.C.D.: 2009 Edition

SIGN NUMBER	SB-02-OH
WIDTH x HGHT.	13'-6" x 8'-6"
BORDER WIDTH	2"
CORNER RADIUS	12"
MOUNTING	Overhead
BACKGROUND	TYPE: Reflective
	COLOR: Green
LEGEND/BORDER	TYPE: Reflective
	COLOR: White/White

SYMBOL	ROT	X	Y	WID	HT
M1-I100A-2-32-15D	0	124.3	69	27	24
Roundabout Custom	0	111.5	10	37	49

Panel Style: guide_con_circular.ssi
Dimensions are in inches.tenths
Letter locations are panel edge to lower left corner

LETTER POSITIONS (X)															LENGTH	SERIES/SIZE
S	O	U	T	H												D 2000
78.9	88	95.4	102.1	108.2											34.7	10.67,8
M	c	C	o	n	n	e	l	l		R	d					D 2000
10.7	20.9	28.6	37.6	45.8	54.1	62	69.8	73.6	75.3	86	94.4				90.2	10.67/8
E	A	S	T													D 2000
42.3	50.7	58.2	64.2												26.9	10.67,8

MODEL: Default
FILE NAME: pw:\\aecom-na-pw.bentley.com:AECOM_DS21_NA_2020\Documents\60632011-IL-47900-CAD910_CAD\03_SHEETS\CivilD160X17-sht-Sign-Det-02.dgn

AECOM
303 EAST WACKER DRIVE, SUITE 1400
CHICAGO, IL 60601-5276
PHONE: (312) 373-7700 FAX: (312) 373-6800

USER NAME = muniza	DESIGNED - MAP	REVISED -
	DRAWN - APA	REVISED -
PLOT SCALE = 20.0000 ' / in.	CHECKED - TJW	REVISED -
PLOT DATE = 2/7/2025	DATE -	REVISED -

STATE OF ILLINOIS
DEPARTMENT OF TRANSPORTATION

SIGNING DETAILS

SCALE: N.T.S. | SHEET 2 OF 5 SHEETS | STA. | TO STA.

F.A.P. RTE.	SECTION	COUNTY	TOTAL SHEETS	SHEET NO.
326	2024-1052-N,C,SW,FL	MCHENRY	941	670
		CONTRACT NO. 62X94		
		ILLINOIS	FED. AID PROJECT	

SIGN DETAIL

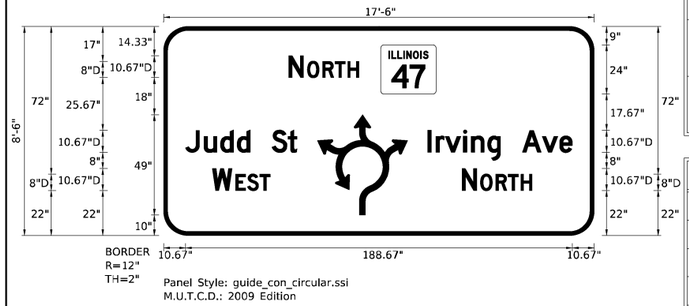

Panel Style: guide_con_circular.ssi
M.U.T.C.D.: 2009 Edition

SIGN NUMBER	NB-03-OH
WIDTH x HGHT.	17'-6" x 8'-6"
BORDER WIDTH	2"
CORNER RADIUS	12"
MOUNTING	Overhead
BACKGROUND	TYPE: Reflective
	COLOR: Green
LEGEND/BORDER	TYPE: Reflective
	COLOR: White/White

SYMBOL	ROT	X	Y	WID	HT
M1-I100A-2-32-15D	0	105.9	69	27	24
Roundabout Custom	0	75	10	44	49

Panel Style: guide_con_circular.ssi
Dimensions are in inches.tenths
Letter locations are panel edge to lower left corner

LETTER POSITIONS (X)															LENGTH	SERIES/SIZE
N	O	R	T	H												D 2000
61.1	70.1	77.6	83.7	89.8											34.2	10.7,8
J	u	d	d		S	t										D 2000
10.7	19.8	27.8	35.9	42.3	52.9	60.8									54.4	10.7/8
I	r	v	i	n	g		A	v	e							D 2000
128.8	132.9	137.4	146.2	150.1	158	164.4	175	184.6	193.1						70.5	10.7/8
W	E	S	T													D 2000
23.8	35.1	40.9	47												28.1	10.7,8
N	O	R	T	H												D 2000
145.5	154.6	162	168.1	174.2											34.2	10.7,8

SIGN DETAIL

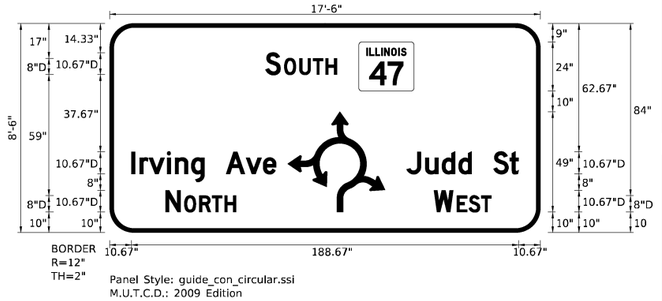

Panel Style: guide_con_circular.ssi
M.U.T.C.D.: 2009 Edition

SIGN NUMBER	SB-03-OH
WIDTH x HGHT.	17'-6" x 8'-6"
BORDER WIDTH	2"
CORNER RADIUS	12"
MOUNTING	Overhead
BACKGROUND	TYPE: Reflective
	COLOR: Green
LEGEND/BORDER	TYPE: Reflective
	COLOR: White/White

SYMBOL	ROT	X	Y	WID	HT
M1-I100A-2-32-15D	0	121.5	69	27	24
Roundabout Custom	0	86.9	10	47.4	49

Panel Style: guide_con_circular.ssi
Dimensions are in inches.tenths
Letter locations are panel edge to lower left corner

LETTER POSITIONS (X)															LENGTH	SERIES/SIZE
S	O	U	T	H												D 2000
76.1	85.1	92.6	99.2	105.4											34.7	10.67,8
I	r	v	i	n	g		A	v	e							D 2000
10.7	14.7	19.2	28.1	31.9	39.8	46.2	56.9	66.5	74.9						70.5	10.67/8
J	u	d	d		S	t										D 2000
144.9	154	162	170.1	176.5	187.2	195.1									54.4	10.67/8
N	O	R	T	H												D 2000
27.4	36.4	43.8	49.9	56.1											34.2	10.67,8
W	E	S	T													D 2000
158.1	169.4	175.2	181.2												28.1	10.67,8

MODEL: Default
FILE NAME: pw:\\aecom-na-pw.bentley.com:AECOM_D521_NA_2020\Documents\60632011-IL-47900-CAD910_CAD\03_SHEETS\CivilD160X17-sht-Sign-Det-03.dgn

AECOM
303 EAST WACKER DRIVE, SUITE 1400
CHICAGO, IL 60601-5276
PHONE: (312) 373-7700 FAX: (312) 373-6800

USER NAME = muniza	DESIGNED - MAP	REVISED -	
	DRAWN - APA	REVISED -	
PLOT SCALE = 20.0000 ' / in.	CHECKED - TJW	REVISED -	
PLOT DATE = 2/7/2025	DATE -	REVISED -	

STATE OF ILLINOIS
DEPARTMENT OF TRANSPORTATION

SIGNING DETAILS

SCALE: N.T.S. | SHEET 3 OF 5 SHEETS | STA. | TO STA.

F.A.P. RTE.	SECTION	COUNTY	TOTAL SHEETS	SHEET NO.
326	2024-1052-N,C,SW,FL	MCHENRY	941	671
		CONTRACT NO. 62X94		
	ILLINOIS	FED. AID PROJECT		

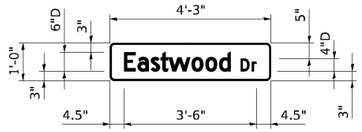

D3-1

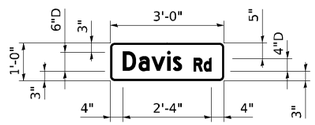

D3-1

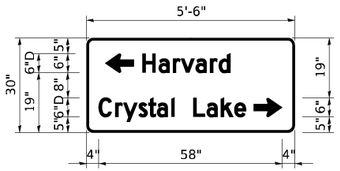

D1-2

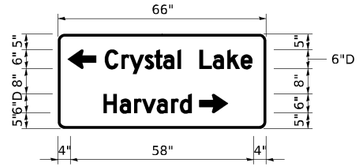

D1-2

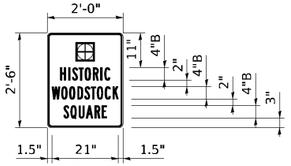

CUSTOM SIGN

BACKGROUND
TYPE: REFLECTIVE, COLOR: BROWN
LEGEND/BORDER
TYPE: REFLECTIVE, COLOR WHITE/WHITE

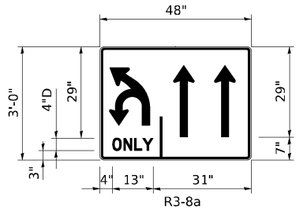

R3-8a

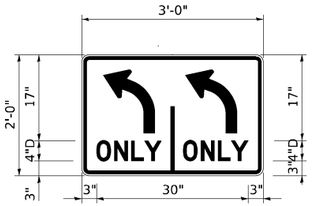

R3-5

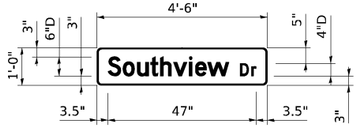

D3-1

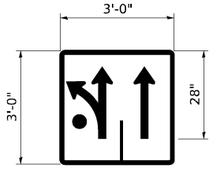

R3-8

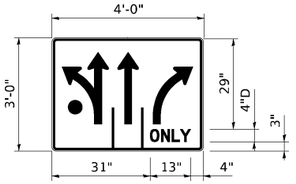

R3-8a

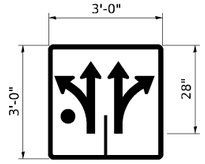

R3-8

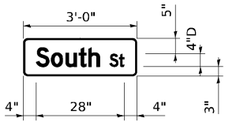

D3-1

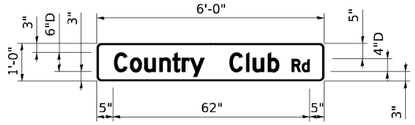

D3-1

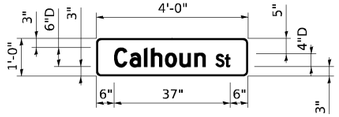

D3-1

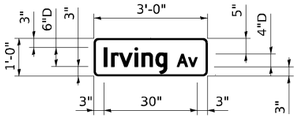

D3-1

CUSTOM SIGN

BACKGROUND
TYPE: REFLECTIVE,
COLOR: WHITE
LEGEND/BORDER
TYPE: REFLECTIVE,
COLOR GREEN/GREEN

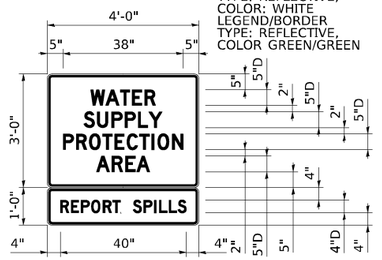

CUSTOM SIGN

BACKGROUND
TYPE: REFLECTIVE,
COLOR: WHITE
LEGEND/BORDER
TYPE: REFLECTIVE,
COLOR GREEN/GREEN

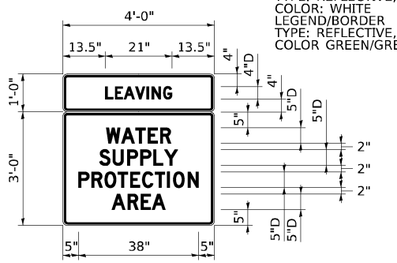

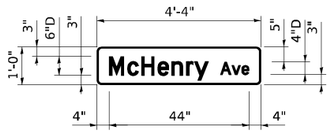

D3-1

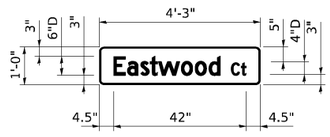

D3-1

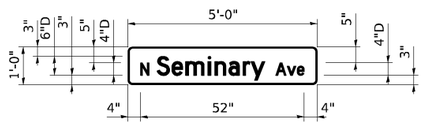

D3-2

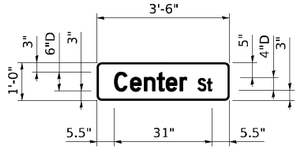

D3-1

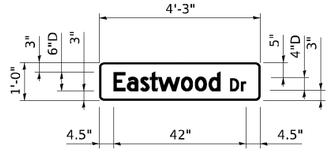

D3-1

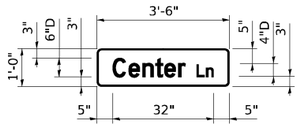

D3-1

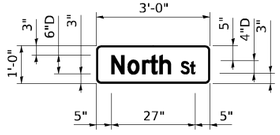

D3-1

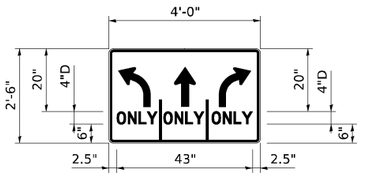

R3-8b

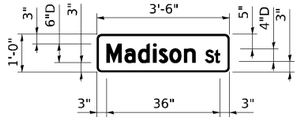

D3-1



CUSTOM SIGN

BACKGROUND
TYPE: REFLECTIVE, COLOR: WHITE
LEGEND/BORDER
TYPE: REFLECTIVE, COLOR BROWN/BROWN

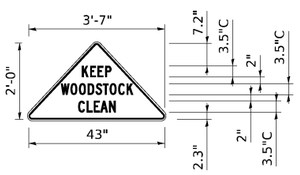

CUSTOM SIGN

BACKGROUND
TYPE: REFLECTIVE, COLOR: WHITE
LEGEND/BORDER
TYPE: REFLECTIVE, COLOR GREEN/GREEN

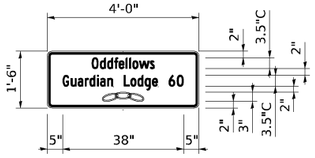

CUSTOM SIGN

BACKGROUND
TYPE: REFLECTIVE, COLOR: WHITE
LEGEND/BORDER
TYPE: REFLECTIVE, COLOR BLACK/BLACK

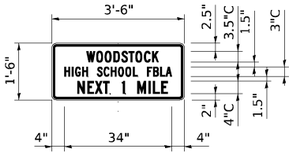

CUSTOM SIGN

BACKGROUND
TYPE: REFLECTIVE, COLOR: WHITE
LEGEND/BORDER
TYPE: REFLECTIVE, COLOR BLACK/BLACK

AECOM
303 EAST WACKER DRIVE, SUITE 1400
CHICAGO, IL 60601-5276
PHONE: (312) 373-7700 FAX: (312) 373-6800

USER NAME = muniza	DESIGNED - APA/OPS	REVISED -	
	DRAWN - APA/OPS	REVISED -	
PLOT SCALE = 20.0000 ' / in.	CHECKED - TJW	REVISED -	
PLOT DATE = 2/7/2025	DATE - 02/06/2025	REVISED -	

STATE OF ILLINOIS
DEPARTMENT OF TRANSPORTATION

SIGNING DETAILS

SCALE: N.T.S. | SHEET 4 OF 5 SHEETS | STA. | TO STA.

F.A.P. RTE.	SECTION	COUNTY	TOTAL SHEETS	SHEET NO.
326	2024-1052-N,C,SW,FL	MCHENRY	941	671A
		CONTRACT NO. 62X94		
		ILLINOIS	FED. AID PROJECT	

MODEL: Default
FILE NAME: pw:\\aecom-na-pw.bentley.com:AECOM_0521_NA_2020\Documents\60632011-IL-471900-CAD\91D_CAD\03_SHEETS\CivilD160X17-sht-Sign-Det-04.cgn

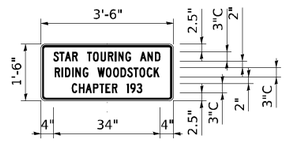

CUSTOM SIGN

BACKGROUND
TYPE: REFLECTIVE, COLOR: WHITE
LEGEND/BORDER
TYPE: REFLECTIVE, COLOR BROWN/BROWN

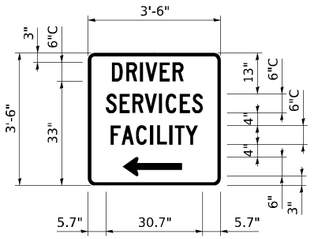

CUSTOM SIGN

BACKGROUND
TYPE: REFLECTIVE, COLOR: GREEN
LEGEND/BORDER
TYPE: REFLECTIVE, COLOR WHITE/WHITE

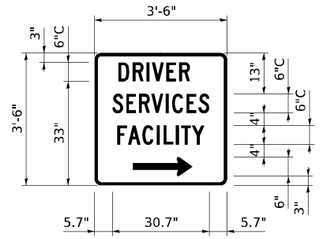

CUSTOM SIGN

BACKGROUND
TYPE: REFLECTIVE, COLOR: GREEN
LEGEND/BORDER
TYPE: REFLECTIVE, COLOR WHITE/WHITE

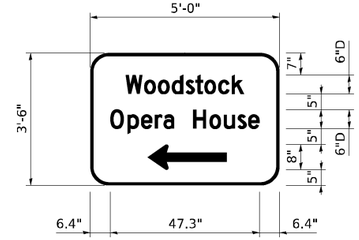

CUSTOM SIGN

BACKGROUND
TYPE: REFLECTIVE, COLOR: BROWN
LEGEND/BORDER
TYPE: REFLECTIVE, COLOR WHITE/WHITE

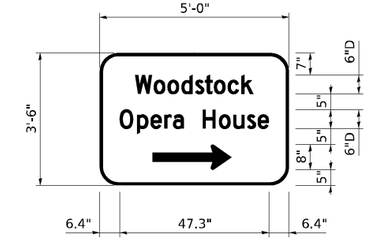

CUSTOM SIGN

BACKGROUND
TYPE: REFLECTIVE, COLOR: BROWN
LEGEND/BORDER
TYPE: REFLECTIVE, COLOR WHITE/WHITE

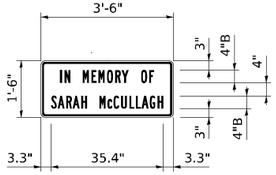

CUSTOM SIGN

BACKGROUND
TYPE: REFLECTIVE, COLOR: WHITE
LEGEND/BORDER
TYPE: REFLECTIVE, COLOR GREEN/GREEN



CUSTOM SIGN

BACKGROUND
TYPE: REFLECTIVE, COLOR: WHITE
LEGEND/BORDER
TYPE: REFLECTIVE, COLOR GREEN/GREEN

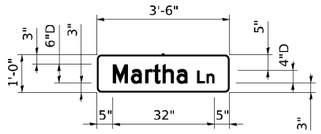

D3-1

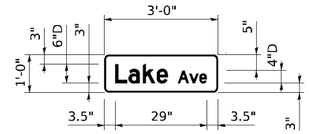

D3-1

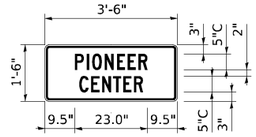

CUSTOM SIGN

BACKGROUND
TYPE: REFLECTIVE, COLOR: WHITE
LEGEND/BORDER
TYPE: REFLECTIVE, COLOR BROWN/BROWN

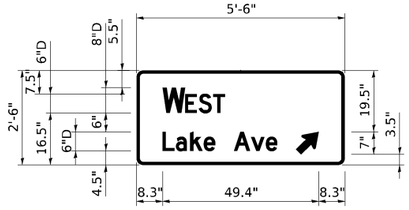

D1-1d

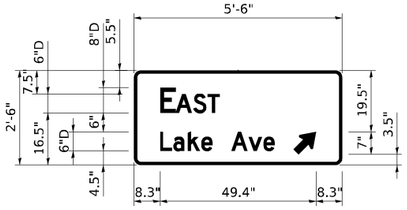

D1-1d

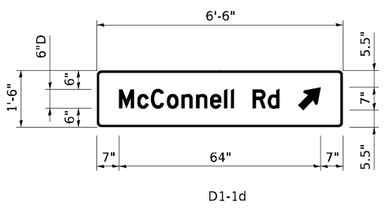

D1-1d

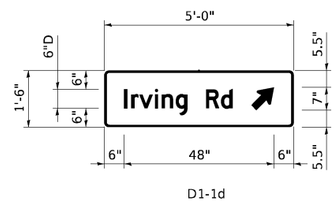

D1-1d

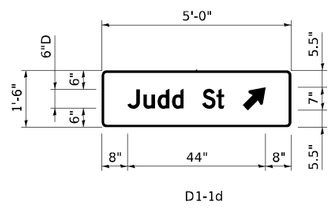

D1-1d

MODEL: Default
FILE NAME: pw:\\aecom-na-pw.bentley.com:AECOM_DS21_NA_2020\Documents\60632011-IL-47G900-CAD\910_CAD\03_SHEETS\Civil\D160X17-sht-Sign-Det-05.dgn

AECOM
303 EAST WACKER DRIVE, SUITE 1400
CHICAGO, IL 60601-5276
PHONE: (312) 373-7700 FAX: (312) 373-6800

USER NAME = muniza	DESIGNED - APA/OPS	REVISED -	
	DRAWN - APA/OPS	REVISED -	
PLOT SCALE = 20.0000 ' / in.	CHECKED - TJW	REVISED -	
PLOT DATE = 2/7/2025	DATE - 02/06/2025	REVISED -	

STATE OF ILLINOIS
DEPARTMENT OF TRANSPORTATION

SIGNING DETAILS

SCALE: N.T.S. | SHEET 5 OF 5 SHEETS | STA. | TO STA.

F.A.P. RTE.	SECTION	COUNTY	TOTAL SHEETS	SHEET NO.
326	2024-1052-N,C,SW,FL	MCHENRY	941	671B
		CONTRACT NO. 62X94		
		ILLINOIS FED. AID PROJECT		

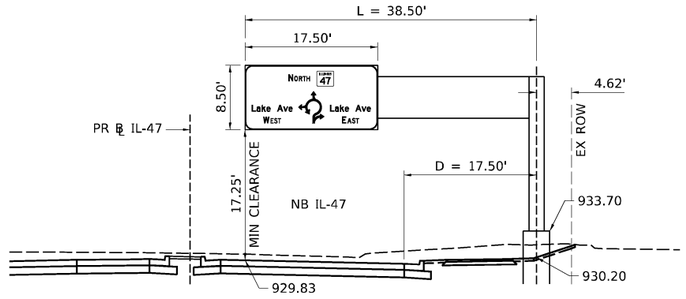

CANTILEVER MOUNTED SIGN

NB-01-OH
STA 128+00.00 (PR ℄ IL-47)
(LOOKING NORTH)

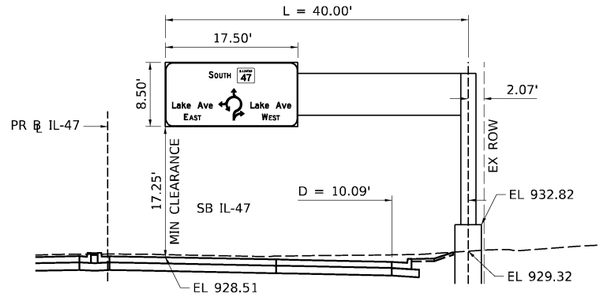

CANTILEVER MOUNTED SIGN

SB-01-OH
STA 132+98.00 (PR ℄ IL-47)
(LOOKING SOUTH)

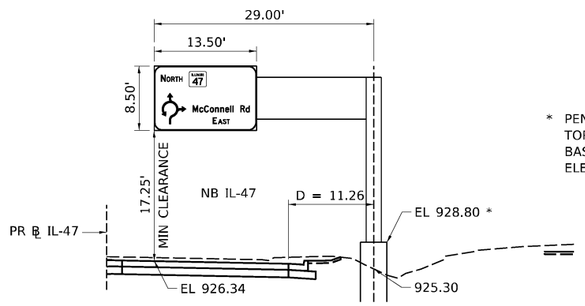

* PENDING PROPOSED GRADING. TOP OF FOUNDATION ELEVATION BASED ON EXISTING GROUND ELEVATIONS.

CANTILEVER MOUNTED SIGN

NB-02-OH
STA 135+75.00 (PR ℄ IL-47)
(LOOKING NORTH)

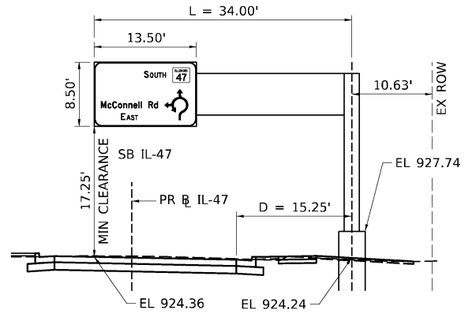

CANTILEVER MOUNTED SIGN

SB-02-OH
STA 140+95.00 (PR ℄ IL-47)
(LOOKING SOUTH)

NOTES:

1) SIGN STRUCTURE STATION GIVEN AT CENTER OF CANTILEVER SIGN FOUNDATION.
2) CANTILEVER SIGN TRUSS SHALL BE ORIENTED PERPENDICULAR TO IL ROUTE 47 EDGE OF PAVEMENT.

AECOM
303 EAST WACKER DRIVE, SUITE 1400
CHICAGO, IL 60601-5276
PHONE: (312) 373-7700 FAX: (312) 373-6800

USER NAME = muniza	DESIGNED -	REVISED -
	DRAWN -	REVISED -
PLOT SCALE = 20.0000 ' / in.	CHECKED -	REVISED -
PLOT DATE = 2/7/2025	DATE -	REVISED -

STATE OF ILLINOIS
DEPARTMENT OF TRANSPORTATION

IL–47 OVERHEAD SIGN STRUCTURES
SIGN ELEVATION DETAILS

SCALE: | SHEET 1 OF 2 SHEETS | STA. | TO STA.

F.A.P. RTE.	SECTION	COUNTY	TOTAL SHEETS	SHEET NO.
326	2024-1052-N,C,SW,FL	MCHENRY	941	672
		CONTRACT NO. 62X94		
		ILLINOIS	FED. AID PROJECT	

MODEL: ALL47-P2_14_OHSS
FILE NAME: pw:\\aecom-na-pw.bentley.com:AECOM_D521_NA_2020\Documents\60832011-IL-47900-CAD910_CAD03_SHEETS\Civil\D160X17-sht-Sign-OH-Det-01.dgn

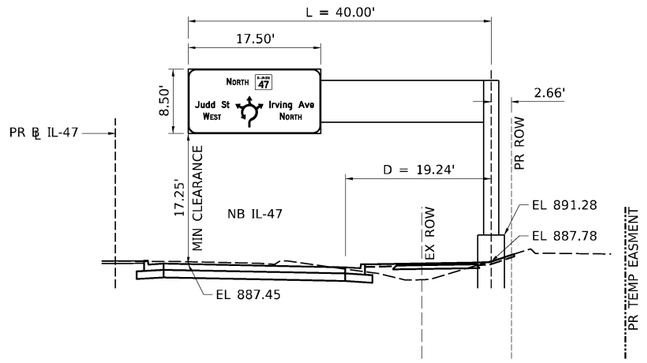

CANTILEVER MOUNTED SIGN

NB-03-OH
STA 181+15.00 (PR ℄ IL-47)
(LOOKING NORTH)

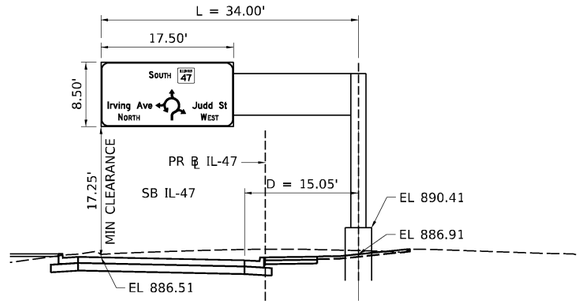

CANTILEVER MOUNTED SIGN

SB-03-OH
STA 186+15.00 (PR ℄ IL-47)
(LOOKING SOUTH)

NOTES:

1) SIGN STRUCTURE STATION GIVEN AT CENTER OF CANTILEVER SIGN FOUNDATION.
2) CANTILEVER SIGN TRUSS SHALL BE ORIENTED PERPENDICULAR TO IL ROUTE 47 EDGE OF PAVEMENT.

AECOM
303 EAST WACKER DRIVE, SUITE 1400
CHICAGO, IL 60601-5276
PHONE: (312) 373-7700 FAX: (312) 373-6800

USER NAME = muniza	DESIGNED -	REVISED -
	DRAWN -	REVISED -
PLOT SCALE = 20.0000 ' / in.	CHECKED -	REVISED -
PLOT DATE = 2/7/2025	DATE -	REVISED -

STATE OF ILLINOIS
DEPARTMENT OF TRANSPORTATION

IL–47 OVERHEAD SIGN STRUCTURES
SIGN ELEVATION DETAILS

SCALE: | SHEET 2 OF 2 SHEETS | STA. | TO STA.

F.A.P. RTE.	SECTION	COUNTY	TOTAL SHEETS	SHEET NO.
326	2024-1052-N,C,SW,FL	MCHENRY	941	673
		CONTRACT NO. 62X94		
	ILLINOIS	FED. AID PROJECT		

MODEL: ALL47-P2_14_OHSS
FILE NAME: pw:\\aecom-na-pw.bentley.com:AECOM_D521_NA_2020\Documents\60632011-IL-47900-CAD910_CAD03_SHEETS\Civil\D160X17-sht-Sign-OH-Det-01.dgn

PAVEMENT MARKING SCHEDULE

PMK	THERMOPLASTIC PAVEMENT MARKING - LETTERS AND SYMBOLS	THERMOPLASTIC PAVEMENT MARKING - LINE 4"	THERMOPLASTIC PAVEMENT MARKING - LINE 6"	THERMOPLASTIC PAVEMENT MARKING - LINE 8"	THERMOPLASTIC PAVEMENT MARKING - LINE 12"	THERMOPLASTIC PAVEMENT MARKING - LINE 24"	PAINT PAVEMENT MARKING - LINE 4"	PREFORMED PLASTIC PAVEMENT MARKING, TYPE D - STANDARD - LETTERS AND SYMBOLS	PREFORMED PLASTIC PAVEMENT MARKING, TYPE D - STANDARD - LINE 7"	PREFORMED PLASTIC PAVEMENT MARKING, TYPE D - STANDARD - LINE 9"	PREFORMED PLASTIC PAVEMENT MARKING, TYPE D - STANDARD - LINE 11"	PREFORMED PLASTIC PAVEMENT MARKING, TYPE D - STANDARD - LINE 15"	PREFORMED PLASTIC PAVEMENT MARKING, TYPE D - STANDARD - LINE 27"	MODIFIED URETHANE PAVEMENT MARKING - LETTERS AND SYMBOLS	MODIFIED URETHANE PAVEMENT MARKING - LINE 4"	MODIFIED URETHANE PAVEMENT MARKING - LINE 6"	MODIFIED URETHANE PAVEMENT MARKING - LINE 8"	MODIFIED URETHANE PAVEMENT MARKING - LINE 12"	MODIFIED URETHANE PAVEMENT MARKING - LINE 24"	RAISED REFLECTIVE PAVEMENT MARKER	RAISED REFLECTIVE PAVEMENT MARKER REMOVAL	GROOVING FOR RECESSED PAVEMENT MARKING; LETTERS AND SYMBOLS	GROOVING FOR RECESSED PAVEMENT MARKING 8"	GROOVING FOR RECESSED PAVEMENT MARKING 10"	GROOVING FOR RECESSED PAVEMENT MARKING 12"	GROOVING FOR RECESSED PAVEMENT MARKING 16"	GROOVING FOR RECESSED PAVEMENT MARKING 28"
SHEET	SQ FT	FOOT	FOOT	FOOT	FOOT	FOOT	FOOT	SQ FT	FOOT	FOOT	FOOT	FOOT	FOOT	SQ FT	FOOT	FOOT	FOOT	FOOT	FOOT	EACH	EACH	SQ FT	FOOT	FOOT	FOOT	FOOT	FOOT
1 - IL 47	224	2,895	1,800	0	654	103	447	0	993	0	0	0	0	577	4,369	2,801	951	1,042	220	110	143	0	993	0	0	0	0
2 - IL 47	158	1,089	102	125	0	0	397	779	4,993	839	2,393	375	645	201	1,889	679	0	261	26	18	54	779	4,993	839	2,393	375	645
3 - IL 47	0	0	0	0	0	0	495	50	1,203	0	63	7	0	208	3,998	920	0	0	0	29	80	50	1,203	0	63	7	0
4 - IL 47	37	307	143	0	0	0	499	383	3,632	0	1,372	233	234	268	3,340	989	582	667	221	26	87	383	3,632	0	1,372	233	234
5 - IL 47	32	568	153	0	0	0	354	0	698	0	0	0	0	224	4,247	653	383	378	172	32	53	0	698	0	0	0	0
6 - IL 47	100	2,311	95	0	47	0	0	0	0	0	0	0	0	0	0	0	0	0	0	56	19	0	0	0	0	0	0
7 - US 14	74	708	779	638	0	0	0	0	0	0		0	0	0	0	0	0	0	0	24	23	0	0	0	0	0	0
8 - SOUTHVIEW	0	772	25	0	0	0	0	0	0	0	0	0	0	0	0	0	0	0	0	0	0	0	0	0	0	0	0
8 - LAKE	37	683	0	0	0	0	0	0	431	73	170	0	0	0	2,327	0	0	50	0	0	0	0	431	73	170	0	0
9 - LAKE	32	703	0	0	0	0	0	0	52	58	0	0	0	0	866	39	0	0	0	29	0	0	52	58	0	0	0
9 - MCCONNELL	0	0	0	0	0	0	0	37	0	0	0	0	0	0	642	0	0	0	0	0	0	37	0	0	0	0	0
10 - E SOUTH	0	278	35	0	0	0	0	0	0	0	0	0	0	0	0	0	0	0	0	0	0	0	0	0	0	0	0
10 - COUNTRY CLUB	110	554	268	170	105	0	0	0	0	0	0	0	0	0	0	0	0	0	0	0	0	0	0	0	0	0	0
11 - E JUDD	0	38	0	0	0	0	0	0	300	0	0	0	0	0	0	0	0	0	0	8	0	0	300	0	0	0	0
11 - IRVING	0	514	0	0	0	0	0	0	17	0	0	0	0	0	0	0	0	0	0	0	0	0	17	0	0	0	0
12 - IL 120	105	2,489	320	0	0	16	0	0	0	0	0	0	0	0	0	0	0	0	0	35	20	0	0	0	0	0	0
TOTAL	909	13,909	3,719	933	806	119	2,192	1,249	12,319	970	3,998	615	879	1,478	21,678	6,080	1,916	2,398	639	367	480	1,249	12,319	970	3,998	615	879

AECOM
303 EAST WACKER DRIVE, SUITE 1400
CHICAGO, IL 60601-5276
PHONE: (312) 373-7700 FAX: (312) 373-6800

USER NAME = PIMSARNO	DESIGNED - OPS	REVISED -
	DRAWN - APA	REVISED -
PLOT SCALE = 100.0000 ' / in.	CHECKED - TJW	REVISED -
PLOT DATE = 2/12/2025	DATE - 02/06/2025	REVISED -

STATE OF ILLINOIS
DEPARTMENT OF TRANSPORTATION

PAVEMENT MARKING SCHEDULE

SCALE: 1" = 50' | SHEET 1 OF 1 SHEETS | STA. | TO STA.

F.A.P. RTE.	SECTION	COUNTY	TOTAL SHEETS	SHEET NO.
326	2024-1052-N,C,SW,FL	MCHENRY	941	674
		CONTRACT NO. 62X94		
	ILLINOIS	FED. AID PROJECT		

MODEL: Default
FILE NAME: pw:\\becom-na-pw.bentley.com:AECOM DS21 NA 2020\Documents\60632011-IL-47900-CADI910 CAD\03 SHEETS\CIVIL\D160X17-sht-PMK-schedule.dgn

SIGN REMOVAL SCHEDULE – SHEET 01:

SIGN NO.	DIRECTION	ROADWAY	STATION	OFFSET	CODE	LEGEND/DESCRIPTION	ACTION	REMOVE SIGN PANEL ASSEMBLY - TYPE A (EACH)	REMOVE SIGN PANEL ASSEMBLY - TYPE B (EACH)	REMOVE SIGN PANEL - TYPE 1 (SQ FT)	REMOVE SIGN PANEL - TYPE 2 (SQ FT)
X-SGN1-01	NB	IL ROUTE 47	90+83.33	44.68' RT	M2-1	JCT	TO REMAIN				
					M1-4	US RTE 14					
R-SGN1-02	NB	IL ROUTE 47	93+83.76	47.12' RT	D3-1	STREET NAME: DAVIS RD	TO BE REMOVED	1			
					D3-1	STREET NAME: EASTWOOD DR	TO BE REMOVED				
R-SGN1-03	NB	IL ROUTE 47	94+53.62	54.86' RT	R1-1	STOP	TO BE REMOVED			9.00	
R-SGN1-04	NB	IL ROUTE 47	96+68.85	46.36' RT	CUSTOM	HARVARD, CRYSTAL LAKE; ARROWS	TO BE REMOVED				10.00
R-SGN1-05	NB	IL ROUTE 47	97+21.83	47.05' RT	CUSTOM	HISTORIC WOODSTOCK SQUARE	TO BE REMOVED			7.50	
R-SGN1-06	NB	IL ROUTE 47	98+77.01	50.67' RT	M1-4	US RTE 14	TO BE REMOVED		1		
					M6-4	DIRECTIONAL ARROW AUXILIARY	TO BE REMOVED				
					M1-I100	IL RTE 47	TO BE REMOVED				
					M6-3	DIRECTIONAL ARROW AUXILIARY	TO BE REMOVED				
R-SGN1-07	NB	IL ROUTE 47	98+99.55	56.76' RT	R10-5	LEFT ON GREEN ARROW ONLY	TO BE REMOVED			7.50	
R-SGN1-08	NB	IL ROUTE 47	99+13.15	70.27' RT	D3-1	STREET NAME: IL ROUTE 47	TO BE REMOVED			9.00	
R-SGN1-09	NB	IL ROUTE 47	99+53.98	70.27' RT	R10-5	LEFT ON GREEN ARROW ONLY	TO BE REMOVED			7.50	
R-SGN1-10	NB	IL ROUTE 47	99+66.17	73.88' RT	R4-7	KEEP RIGHT	TO BE REMOVED			5.00	
R-SGN1-11	NB	IL ROUTE 47	99+96.97	42.31' RT	R5-1	DO NOT ENTER	TO BE REMOVED			9.00	
R-SGN1-12	NB	IL ROUTE 47	100+12.66	70.71' RT	R10-5	LEFT ON GREEN ARROW ONLY	TO BE REMOVED			7.50	
R-SGN1-13	NB	IL ROUTE 47	100+64.63	73.53' RT	M1-I100	IL RTE 47	TO BE REMOVED		1		
					M6-3	DIRECTIONAL ARROW AUXILIARY	TO BE REMOVED				
					M1-4	US RTE 14	TO BE REMOVED				
					M6-4	DIRECTIONAL ARROW AUXILIARY	TO BE REMOVED				
R-SGN1-14	NB	IL ROUTE 47	100+85.02	57.98' RT	M3-1	NORTH	TO BE REMOVED	1			
					M1-I100	IL RTE 47	TO BE REMOVED				
R-SGN1-15	NB	IL ROUTE 47	100+86.17	54.41' RT	D3-1	STREET NAME: US ROUTE 14	TO BE REMOVED			9.00	
R-SGN1-16	NB	IL ROUTE 47	100+69.08	54.94' LT	R4-7	KEEP RIGHT	TO BE REMOVED			5.00	
R-SGN1-17	SB	IL ROUTE 47	101+16.10	54.94' LT	M1-4	US RTE 14	TO BE REMOVED		1		
					M6-4	DIRECTIONAL ARROW AUXILIARY	TO BE REMOVED				
					M1-I100	IL RTE 47	TO BE REMOVED				
					M6-3	DIRECTIONAL ARROW AUXILIARY	TO BE REMOVED				
R-SGN1-18	NB	IL ROUTE 47	100+94.51	58.26' LT	R10-5	LEFT ON GREEN ARROW ONLY	TO BE REMOVED			7.50	
R-SGN1-19	SB	IL ROUTE 47	100+88.69	71.71' LT	M3-4	WEST	TO BE REMOVED	1			
					M1-4	US RTE 14	TO BE REMOVED				
R-SGN1-20	WB	US ROUTE 14	224+79.09	64.79' LT	D3-1	STREET NAME: IL ROUTE 47	TO BE REMOVED			9.00	
R-SGN1-21	WB	US ROUTE 14	224+77.01	23.09' LT	R10-5	LEFT ON GREEN ARROW ONLY	TO BE REMOVED			7.50	
R-SGN1-22	WB	US ROUTE 14	225+08.83	50.21' RT	R10-5	LEFT ON GREEN ARROW ONLY	TO BE REMOVED			7.50	
R-SGN1-23	EB	US ROUTE 14	225+13.32	75.75' RT	M1-I100	IL RTE 47	TO BE REMOVED		1		
					M6-3	DIRECTIONAL ARROW AUXILIARY	TO BE REMOVED				
					M1-4	US RTE 14	TO BE REMOVED				
					M6-4	DIRECTIONAL ARROW AUXILIARY	TO BE REMOVED				
R-SGN1-24	SB	IL ROUTE 47	99+20.56	52.51' LT	M3-3	SOUTH	TO BE REMOVED	1			
					M1-I100	IL RTE 47	TO BE REMOVED				
R-SGN1-25	SB	IL ROUTE 47	99+20.56	45.98' LT	D3-1	STREET NAME: US ROUTE 14	TO BE REMOVED			9.00	
R-SGN1-26	SB	IL ROUTE 47	99+24.49	6.91' LT	R4-7	KEEP RIGHT	TO BE REMOVED			5.00	
R-SGN1-27	SB	IL ROUTE 47	96+76.15	58.67' LT	W4-2	LANE ENDS	TO BE REMOVED			9.00	
R-SGN1-28	SB	IL ROUTE 47	95+25.78	55.07' LT	R3-5R	RIGHT TURN ONLY	TO BE REMOVED			7.50	
R-SGN1-29	SB	IL ROUTE 47	94+58.51	73.98' LT	D3-1	DAVIS RD	TO BE REMOVED	1			
					D3-1	EASTWOOD DR	TO BE REMOVED				
R-SGN1-30	SB	IL ROUTE 47	94+04.02	62.51' LT	R1-1	STOP	TO BE REMOVED			9.00	
R-SGN1-31	SB	IL ROUTE 47	93+64.80	45.65' LT	R2-1	SPEED LIMIT 40	TO BE REMOVED			7.50	
R-SGN1-32	NB	IL ROUTE 47	103+09.35	46.99' RT	R2-1	SPEED LIMIT 35	TO BE REMOVED			7.50	
R-SGN1-33	NB	IL ROUTE 47	105+40.34	54.00' RT	D3-1	STREET NAME: CATALPA LN	TO BE REMOVED	1			
					D3-1	STREET NAME: EASTWOOD DR	TO BE REMOVED				
R-SGN1-34	NB	IL ROUTE 47	106+01.33	52.27' RT	R1-1	STOP	TO BE REMOVED	1			
R-SGN1-35	NB	IL ROUTE 47	106+85.36	36.54' RT	W4-2	LANE ENDS	TO BE REMOVED	1			
R-SGN1-36	NB	IL ROUTE 47	108+91.31	30.25' RT	R3-9b	CENTER LANE TWO WAY LEFT	TO BE REMOVED			6.00	
R-SGN1-37	NB	IL ROUTE 47	115+54.00	26.58' RT	R2-1	SPEED LIMIT 35	TO BE REMOVED			7.50	
R-SGN1-38	SB	IL ROUTE 47	115+17.43	23.97' LT	R2-1	SPEED LIMIT 35	TO BE REMOVED			7.50	
R-SGN1-39	SB	IL ROUTE 47	107+04.49	31.03' LT	M2-1	JCT	TO BE REMOVED	1			
					M1-4	US RTE 14	TO BE REMOVED				
R-SGN1-40	SB	IL ROUTE 47			CUSTOM	CRYSTAL LAKE; HARVARD	TO BE REMOVED				10.00

NOTE:
FOR SIGN REMOVAL TOTAL, SEE SHEET 680

AECOM
303 EAST WACKER DRIVE, SUITE 1400
CHICAGO, IL 60601-5276
PHONE: (312) 373-7700 FAX: (312) 373-6800

USER NAME = muniza	DESIGNED - APA	REVISED -
	DRAWN - APA	REVISED -
PLOT SCALE = 100.0000 ' / in.	CHECKED - TJW	REVISED -
PLOT DATE = 2/7/2025	DATE - 02/06/2025	REVISED -

STATE OF ILLINOIS
DEPARTMENT OF TRANSPORTATION

SIGN REMOVAL SCHEDULE

SCALE: NONE | SHEET 1 OF 6 SHEETS | STA. | TO STA.

F.A.P. RTE.	SECTION	COUNTY	TOTAL SHEETS	SHEET NO.
326	2024-1052-N,C,SW,FL	MCHENRY	941	675
		CONTRACT NO. 62X94		
	ILLINOIS	FED. AID PROJECT		

MODEL: Default
FILE NAME: pw:\\aecom-na-pw.bentley.com:AECOM_D523_NA_2020\Documents\60632011-IL-47900-CAD\910_CAD\03_SHEETS\CIVIL\D160X17-sht-sign-schedule-01.dgn

SIGN REMOVAL SCHEDULE – SHEET 02:

SIGN NO.	DIRECTION	ROADWAY	STATION	OFFSET	CODE	LEGEND/DESCRIPTION	ACTION	REMOVE SIGN PANEL ASSEMBLY - TYPE A (EACH)	REMOVE SIGN PANEL ASSEMBLY - TYPE B (EACH)	REMOVE SIGN PANEL - TYPE 1 (SQ FT)	REMOVE SIGN PANEL - TYPE 2 (SQ FT)
R-SGN2-01	NB	IL ROUTE 47	127+29.54	50.24' RT	R1-1	STOP	TO BE REMOVED			9.00	
R-SGN2-02	SB	IL ROUTE 47	125+27.03	24.74' LT	R3-9b	CENTER LANE TWO WAY LEFT	TO BE REMOVED			6.00	
R-SGN2-03	SB	IL ROUTE 47	121+15.33	34.99' LT	R3-5R	RIGHT TURN ONLY	TO BE REMOVED			7.50	
R-SGN2-04	SB	IL ROUTE 47	120+21.20	36.83' LT	D3-1	SOUTHVIEW DR	TO BE REMOVED	1			
					D3-1	EASTWOOD DR	TO BE REMOVED				
R-SGN2-05	WB	SOUTHVIEW DR	207+13.89	24.07' LT	R5-1	DO NOT ENTER	TO BE REMOVED			9.00	
R-SGN2-06	WB	SOUTHVIEW DR	206+94.06	39.81' LT	R1-1	STOP	TO BE REMOVED	1			
					R3-5R	RIGHT TURN ONLY	TO BE REMOVED				
R-SGN2-07	EB	SOUTHVIEW DR	207+61.14	20.49' RT	R1-1	STOP	TO BE REMOVED			9.00	
R-SGN2-08	EB	LAKE AVE	180+17.30	26.97' RT	R2-1	SPEED LIMIT 40	TO BE REMOVED			7.50	
R-SGN2-09	WB	LAKE AVE	178+42.52	23.49' LT	M6-4	DIRECTIONAL ARROW AUXILIARY	TO BE REMOVED			2.19	
R-SGN2-10	NB	IL ROUTE 47	131+15.96	35.64' RT	D3-1	STREET NAME: LAKE AVE	TO BE REMOVED			9.00	
R-SGN2-11	NB	IL ROUTE 47	132+44.59	26.42' RT	R2-1	SPEED LIMIT 35	TO BE REMOVED			7.50	
R-SGN2-12	NB	IL ROUTE 47	133+02.10	34.85' RT	D3-1	STREET SIGN: WANDA LANE	TO BE REMOVED	1			
					D3-1	STREET SIGN: EASTWOOD DR	TO BE REMOVED				
R-SGN2-13	NB	IL ROUTE 47	133+48.54	29.76' RT	R1-1	STOP	TO BE REMOVED			9.00	
R-SGN2-14	NB	IL ROUTE 47	135+74.96	30.07' RT	W3-3	SIGNAL AHEAD	TO BE REMOVED	1			
					W16-8P	ADVANCE STREET NAME: MCCONNELL RD	TO BE REMOVED				
R-SGN2-15	NB	IL ROUTE 47	136+20.19	27.86' RT	OM3-R	OBJECT MARKER	TO BE REMOVED			3.00	
R-SGN2-16	NB	IL ROUTE 47	136+75.15	30.45' RT	OM3-L	OBJECT MARKER	TO BE REMOVED			3.00	
R-SGN2-17	NB	IL ROUTE 47	138+54.50	42.83' RT	R3-5R	RIGHT TURN ONLY	TO BE REMOVED			7.50	
R-SGN2-18	EB	MCCONNELL RD	138+57.94	36.49' RT	D3-1	STREET NAME: IL ROUTE 47	TO BE REMOVED			9.00	
R-SGN2-19	NB	IL ROUTE 47	139+77.16	38.43' RT	D3-1	STREET NAME: MCCONNELL RD	TO BE REMOVED			9.00	
R-SGN2-20	WB	MCCONNELL RD	137+54.43	28.67' LT	D3-1	STREET NAME: IL ROUTE 47	TO BE REMOVED			9.00	
R-SGN2-21	SB	IL ROUTE 47	138+40.42	38.14' LT	D3-1	STREET NAME: MCCONNELL RD	TO BE REMOVED			9.00	
R-SGN2-22	SB	IL ROUTE 47	136+95.30	26.76' LT	OM3-R	OBJECT MARKER	TO BE REMOVED			3.00	
R-SGN2-23	SB	IL ROUTE 47	136+41.64	29.84' LT	OM3-L	OBJECT MARKER	TO BE REMOVED			3.00	
R-SGN2-24	WB	LAKE AVE	176+60.96	24.17' LT	R2-1	SPEED LIMIT 40	TO BE REMOVED			7.50	
R-SGN2-25	WB	LAKE AVE	177+65.13	28.11' LT	D3-1	STREET NAME: EASTWOOD DR	TO BE REMOVED			9.00	
R-SGN2-26	SB	IL ROUTE 47	129+97.30	34.63' LT	D3-1	STREET NAME: LAKE AVE	TO BE REMOVED			9.00	
R-SGN2-27	SB	IL ROUTE 47	128+48.89	26.84' LT	R2-1	SPEED LIMIT 35	TO BE REMOVED			7.50	

SIGN REMOVAL SCHEDULE – SHEET 03:

SIGN NO.	DIRECTION	ROADWAY	STATION	OFFSET	CODE	LEGEND/DESCRIPTION	ACTION	REMOVE SIGN PANEL ASSEMBLY - TYPE A (EACH)	REMOVE SIGN PANEL ASSEMBLY - TYPE B (EACH)	REMOVE SIGN PANEL - TYPE 1 (SQ FT)	REMOVE SIGN PANEL - TYPE 2 (SQ FT)
R-SGN3-01	NB	IL ROUTE 47	141+08.81	24.04' RT	R3-9b	CENTER LANE TWO WAY LEFT	TO BE REMOVED			6.00	
R-SGN3-02	NB	IL ROUTE 47	146+87.06	26.94' RT	R2-1	SPEED LIMIT 35	TO BE REMOVED			7.50	
R-SGN3-03	SB	IL ROUTE 47	151+90.75	51.61' LT	R1-1	STOP	TO BE REMOVED			9.00	
R-SGN3-04	SB	IL ROUTE 47	146+44.62	24.63' LT	R2-1	SPEED LIMIT 35	TO BE REMOVED			7.50	
R-SGN3-05	SB	IL ROUTE 47	143+04.56	26.09' LT	W3-3	SIGNAL AHEAD	TO BE REMOVED	1			
					W16-8P	ADVANCE STREET NAME: MCCONNELL RD	TO BE REMOVED				
R-SGN3-06	NB	IL ROUTE 47	155+36.55	25.47' RT	CUSTOM	DRIVER SERVICES FACILITY	TO BE REMOVED			9.00	
R-SGN3-07	NB	IL ROUTE 47	156+36.88	37.27' RT	R3-5R	RIGHT ONLY	TO BE REMOVED			7.50	
R-SGN3-08	NB	IL ROUTE 47	163+90.03	46.44' RT	R3-2	NO LEFT	TO BE REMOVED			4.00	
R-SGN3-09	NB	IL ROUTE 47	164+18.68	58.46' RT	R1-1	STOP	TO BE REMOVED			9.00	
R-SGN3-10	NB	IL ROUTE 47	164+30.55	47.54' RT	CUSTOM	RIGHT TURN ONLY	TO BE REMOVED			7.50	
R-SGN3-11	SB	IL ROUTE 47	164+07.04	29.27' LT	R3-9b	CENTER LANE TWO WAY LEFT	TO BE REMOVED			6.00	
R-SGN3-12	SB	IL ROUTE 47	161+29.94	27.88' LT	W9-1	RIGHT LANE ENDS	TO BE REMOVED			9.00	
R-SGN3-13	SB	IL ROUTE 47	159+27.41	37.58' LT	CUSTOM	DRIVER SERVICES FACILITY	TO BE REMOVED			9.00	
R-SGN3-14	SB	IL ROUTE 47	158+06.46	37.64' LT	W4-2	LANE ENDS	TO BE REMOVED			9.00	
R-SGN3-15	SB	IL ROUTE 47	156+56.05	37.25' LT	W1-8	CHEVRON ALIGNMENT	TO BE REMOVED			3.00	

NOTE:
FOR SIGN REMOVAL TOTAL, SEE SHEET 680

AECOM
303 EAST WACKER DRIVE, SUITE 1400
CHICAGO, IL 60601-5276
PHONE: (312) 373-7700 FAX: (312) 373-6800

USER NAME = muniza	DESIGNED - APA	REVISED -
	DRAWN - APA	REVISED -
PLOT SCALE = 100.0000 ' / In.	CHECKED - TJW	REVISED -
PLOT DATE = 2/7/2025	DATE - 02/06/2025	REVISED -

STATE OF ILLINOIS
DEPARTMENT OF TRANSPORTATION

SIGN REMOVAL SCHEDULE

SCALE: NONE | SHEET 2 OF 6 SHEETS | STA. | TO STA.

F.A.P. RTE.	SECTION	COUNTY	TOTAL SHEETS	SHEET NO.
326	2024-1052-N,C,SW,FL	MCHENRY	941	676
		CONTRACT NO. 62X94		
	ILLINOIS	FED. AID PROJECT		

MODEL: Default
FILE NAME: pw:\\aecom-na-pw.bentley.com:AECOM_DS21_NA_2020\Documents\60632011-IL-47\900-CAD\910_CAD\03_SHEETS\GWID160X17-sht-sdjm-schedule-02.dgn

SIGN REMOVAL SCHEDULE – SHEET 03:

SIGN NO.	DIRECTION	ROADWAY	STATION	OFFSET	CODE	LEGEND/DESCRIPTION	ACTION	REMOVE SIGN PANEL ASSEMBLY - TYPE A (EACH)	REMOVE SIGN PANEL ASSEMBLY - TYPE B (EACH)	REMOVE SIGN PANEL - TYPE 1 (SQ FT)	REMOVE SIGN PANEL - TYPE 2 (SQ FT)
R-SGN3-16	SB	IL ROUTE 47	154+93.52	34.00' LT	W1-8	CHEVRON ALIGNMENT	TO BE REMOVED			3.00	
R-SGN3-17	SB	IL ROUTE 47	153+90.93	27.30' LT	W1-8	CHEVRON ALIGNMENT	TO BE REMOVED			3.00	

SIGN REMOVAL SCHEDULE – SHEET 04:

SIGN NO.	DIRECTION	ROADWAY	STATION	OFFSET	CODE	LEGEND/DESCRIPTION	ACTION	REMOVE SIGN PANEL ASSEMBLY - TYPE A (EACH)	REMOVE SIGN PANEL ASSEMBLY - TYPE B (EACH)	REMOVE SIGN PANEL - TYPE 1 (SQ FT)	REMOVE SIGN PANEL - TYPE 2 (SQ FT)
R-SGN4-01	WB	COUNTRY CLUB RD	115+44.38	40.43' LT	D3-1	STREET NAME: COUNTRY CLUB RD	TO BE REMOVED	1			
						STREET NAME: EASTWOD DR	TO BE REMOVED				
R-SGN4-02	NB	IL ROUTE 47	167+31.68	50.98' RT	CUSTOM	SOUTH ST, COUNTRY CLUB RD	TO BE REMOVED				10.00
R-SGN4-03	NB	IL ROUTE 47	168+00.64	45.39' RT	R2-1	SPEED LIMIT 35	TO BE REMOVED			7.50	
R-SGN4-04	NB	IL ROUTE 47	168+39.50	44.82' RT	CUSTOM	ADOPT A HIGHWAY, PIONEER CENTER, KEEP WOODSTOCK CLEAN	TO BE REMOVED		1		
R-SGN4-05	NB	IL ROUTE 47	170+78.71	41.02' RT	R3-5R	RIGHT ONLY	TO BE REMOVED	1			
					R3-2	NO LEFT TURN	TO BE REMOVED				
R-SGN4-06	NB	IL ROUTE 47	170+96.22	60.84' RT	R3-2	NO LEFT TURN	TO BE REMOVED			4.00	
R-SGN4-07	NB	IL ROUTE 47	171+31.49	43.84' RT	CUSTOM	WOODSTOCK OPERA HOUSE	TO BE REMOVED				10.00
R-SGN4-08	NB	IL ROUTE 47	172+33.27	48.12' RT	W4-2	LANE ENDS	TO BE REMOVED			9.00	
R-SGN4-09	NB	IL ROUTE 47	174+91.43	64.89' RT	R1-1	STOP	TO BE REMOVED			9.00	
R-SGN4-10	SB	IL ROUTE 47	177+49.66	23.41' LT	R2-1	SPEED LIMIT 35	TO BE REMOVED			7.50	
R-SGN4-11	SB	IL ROUTE 47	174+27.28	32.76' LT	CUSTOM	WOODSTOCK OPERA HOUSE	TO BE REMOVED				10.00
R-SGN4-12	SB	IL ROUTE 47	173+71.16	112.03' LT	CUSTOM	NO THRU TRAFFIC	TO BE REMOVED			2.00	
R-SGN4-13	SB	IL ROUTE 47	172+75.00	30.30' LT	R4-7	KEEP RIGHT	TO BE REMOVED			5.00	
R-SGN4-14	SB	IL ROUTE 47	172+68.19	29.40' LT	D3-1	STREET NAME: CALHOUN ST	TO BE REMOVED			2.00	
R-SGN4-15	SB	IL ROUTE 47	172+61.56	30.27' LT	R3-2	NO LEFT TURN	TO BE REMOVED			4.00	
R-SGN4-16	SB	IL ROUTE 47	172+39.01	40.40' LT	R1-1	STOP	TO BE REMOVED				
					R3-5R	RIGHT ONLY	TO BE REMOVED		1		
					R5-1	DO NOT ENTER	TO BE REMOVED				
R-SGN4-17	SB	IL ROUTE 47	169+92.27	45.20' LT	R1-1	STOP	TO BE REMOVED			9.00	
R-SGN4-18	SB	IL ROUTE 47	167+93.17	43.16' LT	CUSTOM	COUNTRY CLUB RD, SOUTH ST	TO BE REMOVED				10.00
R-SGN4-19	WB	SOUTH ST	113+71.22	20.26' LT	R7-1	NO PARKING ANY TIME	TO BE REMOVED			1.50	
R-SGN4-20	WB	SOUTH ST	112+66.35	18.86' LT	R7-1	NO PARKING ANY TIME	TO BE REMOVED			1.50	
R-SGN4-21	EB	SOUTH ST	113+62.10	20.73' RT	R7-1	NO PARKING ANY TIME	TO BE REMOVED			1.50	
R-SGN4-22	EB	SOUTH ST	114+48.10	29.70' RT	D3-1	SOUTH ST	TO BE REMOVED	1			
					D3-1	EASTWOOD DR	TO BE REMOVED				
R-SGN4-23	NB	IL ROUTE 47	165+44.14	29.88' LT	R2-1	SPEED LIMIT 35	TO BE REMOVED			7.50	
R-SGN4-24	NB	IRVING AVE	200+63.65	23.95' RT	R12-1	WEIGHT LIMIT 8 TONS	TO BE REMOVED			5.00	
R-SGN4-25	NB	IRVING AVE	201+52.57	24.44' RT	R2-1	SPEED LIMIT 40	TO BE REMOVED			7.50	
R-SGN4-26	NB	IRVING AVE	202+38.56	23.42' RT	CUSTOM	ADOPT A HIGHWAY	TO BE REMOVED	1			
R-SGN4-27	NB	IL ROUTE 47	183+19.00	30.62' RT	CUSTOM	JUDD ST, IRVING ST	TO BE REMOVED				10.00
R-SGN4-28	NB	IL ROUTE 47	184+12.73	26.83' RT	R2-1	SPEED LIMIT 35	TO BE REMOVED			7.50	
R-SGN4-29	WB	JUDD ST	110+47.97	22.16' LT	R7-1	NO PARKING ANY TIME	TO BE REMOVED			1.50	
R-SGN4-30	EB	JUDD ST	110+78.62	21.86' RT	R3-8	LEFT THRU, RIGHT ONLY	TO BE REMOVED	1			
					R7-1	NO PARKING HERE TO CORNER	TO BE REMOVED				
R-SGN4-31	SB	IL ROUTE 47	181+99.15	23.86' LT	CUSTOM	JUDD ST, IRVING ST	TO BE REMOVED				10.00
R-SGN4-32	SB	IL ROUTE 47	181+71.07	27.49' LT	CUSTOM	ADOPT A HIGHWAY, PIONEER CENTER, KEEP WOODSTOCK CLEAN	TO BE REMOVED		1		
R-SGN4-33	SB	IL ROUTE 47	180+78.36	35.83' LT	D3-1	IRVING AVE	TO BE REMOVED	1			
					D3-1	EASTWOOD DR	TO BE REMOVED				
R-SGN4-34	SB	IL ROUTE 47	180+34.38	180+34.38	R1-1	STOP	TO BE REMOVED			9.00	
R-SGN4-35	SB	IL ROUTE 47	179+36.79	25.60' LT	R3-9B	CENTER LANE TWO WAY LEFT	TO BE REMOVED			6.00	

NOTE:
FOR SIGN REMOVAL TOTAL, SEE SHEET 680

AECOM
303 EAST WACKER DRIVE, SUITE 1400
CHICAGO, IL 60601-5276
PHONE: (312) 373-7700 FAX: (312) 373-6800

USER NAME = muniza	DESIGNED - APA	REVISED -	
	DRAWN - APA	REVISED -	
PLOT SCALE = 100.0000 ' / in.	CHECKED - TJW	REVISED -	
PLOT DATE = 2/7/2025	DATE - 02/06/2025	REVISED -	

STATE OF ILLINOIS
DEPARTMENT OF TRANSPORTATION

SIGN REMOVAL SCHEDULE

SCALE: NONE | SHEET 3 OF 6 SHEETS | STA. | TO STA.

F.A.P. RTE.	SECTION	COUNTY	TOTAL SHEETS	SHEET NO.
326	2024-1052-N,C,SW,FL	MCHENRY	941	677
		CONTRACT NO. 62X94		
	ILLINOIS FED. AID PROJECT			

MODEL: Default
FILE NAME: pw:\\aecom-na-pw.bentley.com:AECOM_DS21_NA_2020Documents\60632011-IL-47900-CADD\10_CADD\03_SHEETS\Civil\D160X17-sht-sign-schedule-03.dgn

SIGN REMOVAL SCHEDULE – SHEET 05:

SIGN NO.	DIRECTION	ROADWAY	STATION	OFFSET	CODE	LEGEND/DESCRIPTION	ACTION	REMOVE SIGN PANEL ASSEMBLY - TYPE A (EACH)	REMOVE SIGN PANEL ASSEMBLY - TYPE B (EACH)	REMOVE SIGN PANEL - TYPE 1 (SQ FT)	REMOVE SIGN PANEL - TYPE 2 (SQ FT)
R-SGN5-01	NB	IL ROUTE 47	194+32.52	25.88' RT	M2-1	JCT	TO BE REMOVED				
					M1-I100	ILLINOIS ROUTE 120	TO BE REMOVED		1		
					CUSTOM	MCHENRY AV	TO BE REMOVED				
R-SGN5-02	NB	IL ROUTE 47	196+42.63	26.92' RT	S1-1	SCHOOL ZONE	TO BE REMOVED		1		
					W16-9P	AHEAD	TO BE REMOVED				
R-SGN5-03	NB	IL ROUTE 47	197+63.39	55.99' RT	W14-1	DEAD END	TO BE REMOVED			9.00	
R-SGN5-04	NB	IL ROUTE 47	198+21.11	51.03' RT	D3-1	STREET NAME: CENTER ST	TO BE REMOVED	1			
					D3-1	STREET NAME: EASTWOOD DR	TO BE REMOVED				
R-SGN5-05	NB	IL ROUTE 47	198+26.84	40.40' RT	R1-1	STOP	TO BE REMOVED			9.00	
R-SGN5-06	SB	IL ROUTE 47	199+14.60	32.10' LT	R2-1	SPEED LIMIT 35	TO BE REMOVED			7.50	
R-SGN5-07	SB	IL ROUTE 47	196+56.22	40.63' LT	R7-1	NO PARKING ANY TIME	TO BE REMOVED			1.50	
R-SGN5-08	SB	IL ROUTE 47	196+49.87	27.23' LT	R3-9b	CENTER LANE TWO WAY LEFT	TO BE REMOVED			6.00	
R-SGN5-09	SB	IL ROUTE 47	195+77.38	29.13' LT	R2-2	STOP	TO BE REMOVED			9.00	
R-SGN5-10	SB	IL ROUTE 47	193+91.54	22.69' LT	W11-10	TRUCK TRAFFIC WARNING	TO BE REMOVED			9.00	
R-SGN5-11	NB	IL ROUTE 47	199+30.80	18.69' RT	M1-I100	IL RTE 47	TO BE REMOVED				
					M6-2	DIRECTIONAL ARROW AUXILIARY	TO BE REMOVED		1		
					M1-I100	IL RTE 120	TO BE REMOVED				
					M6-4	DIRECTIONAL ARROW AUXILIARY	TO BE REMOVED				
R-SGN5-12	NB	IL ROUTE 47	200+29.84	15.44' RT	R10-11b	NO TURN ON RED	TO BE REMOVED		1		
					S4-I103	ON SCHOOL DAYS WHEN CHILDREN ARE PRESENT	TO BE REMOVED				
R-SGN5-13	NB	IL ROUTE 47	200+35.38	14.65' RT	R10-11b	NO TURN ON RED	TO BE REMOVED		1		
					S4-I103	ON SCHOOL DAYS WHEN CHILDREN ARE PRESENT	TO BE REMOVED				
R-SGN5-14	EB	IL ROUTE 120	67+87.08	28.31' RT	M3-2	EAST	TO BE REMOVED	1			
					M1-I100	IL RTE 120	TO BE REMOVED				
R-SGN5-15	EB	IL ROUTE 120	67+87.02	16.56' RT	CUSTOM	IL RTE 47, SEMINARY AV, EASTWOOD DR	TO BE REMOVED				10.00
R-SGN5-16	WB	IL ROUTE 120	68+60.56	32.33' LT	M1-I100	IL RTE 47	TO BE REMOVED				
					M6-4	DIRECTIONAL ARROW AUXILIARY	TO BE REMOVED		1		
					M1-I100	IL RTE 120	TO BE REMOVED				
					M6-2	DIRECTIONAL ARROW AUXILIARY	TO BE REMOVED				
R-SGN5-17	WB	IL ROUTE 120	67+90.44	26.78' LT	R10-11b	NO TURN ON RED	TO BE REMOVED		1		
					S4-I103	ON SCHOOL DAYS WHEN CHILDREN ARE PRESENT	TO BE REMOVED				
R-SGN5-18	WB	IL ROUTE 120	68+18.35	51.14' LT	S1-1	SCHOOL ZONE	TO BE REMOVED		1		
					W16-7P	DOWNWARD ARROW	TO BE REMOVED				
R-SGN5-19	NB	IL ROUTE 47	201+70.56	4.02' RT	CUSTOM	ILL RTE 120, MCHENRY AVE	TO BE REMOVED				10.00
R-SGN5-20	NB	IL ROUTE 47	201+69.71	17.44' RT	R10-11b	NO TURN ON RED	TO BE REMOVED		1		
					S4-I103	ON SCHOOL DAYS WHEN CHILDREN ARE PRESENT	TO BE REMOVED				
R-SGN5-21	NB	IL ROUTE 47	202+02.84	15.81' RT	M3-1	NORTH	TO BE REMOVED	1			
					M1-I100	IL ROUTE 47	TO BE REMOVED				
R-SGN5-22	NB	IL ROUTE 47	202+68.21	19.27' RT	R2-1	SPEED LIMIT 40	TO BE REMOVED			7.50	
R-SGN5-23	NB	IL ROUTE 47	203+65.25	21.94' RT	R3-9b	CENTER LANE TWO WAY LEFT	TO BE REMOVED			6.00	
R-SGN5-24	NB	IL ROUTE 47	205+21.63	23.17' RT	CUSTOM	WATER SUPPLY PROTECTION AREA	TO BE REMOVED	1			
					CUSTOM	REPORT SPILLS	TO BE REMOVED				
R-SGN5-25	NB	IL ROUTE 47	206+68.59	23.10' RT	CUSTOM	ADOPT A HIGHWAY	TO BE REMOVED				
					CUSTOM	HEARTHSTONE COMMUNITIES	TO BE REMOVED		1		
					CUSTOM	KEEP WOODSTOCK CLEAN	TO BE REMOVED				
X-SGN5-26	SB	IL ROUTE 47	208+58.97	40.81' LT	R1-1	STOP	TO REMAIN				
R-SGN5-27	SB	IL ROUTE 47	207+58.37	30.55' LT	M2-1	JCT	TO BE REMOVED				
					M1-I100	ILLINOIS ROUTE 120	TO BE REMOVED		1		
					CUSTOM	MCHENRY AV	TO BE REMOVED				
R-SGN5-28	SB	IL ROUTE 47	206+32.73	23.92' LT	R3-9b	CENTER LANE TWO WAY LEFT	TO BE REMOVED			7.50	
R-SGN5-29	SB	IL ROUTE 47	205+22.78	23.61' LT	CUSTOM	LEAVING, WATER SUPPLY PROTECTION AREA	TO BE REMOVED	1			
R-SGN5-30	SB	IL ROUTE 47	201+59.60	40.51' LT	M1-I100	IL RTE 47	TO BE REMOVED				
					M6-2L	DIRECTIONAL ARROW AUXILIARY	TO BE REMOVED		1		
					M1-I100	IL RTE 120	TO BE REMOVED				
					M6-4	DIRECTIONAL ARROW AUXILIARY	TO BE REMOVED				
R-SGN5-31	SB	IL ROUTE 47	201+25.09	45.52' LT	R10-11b	NO TURN ON RED	TO BE REMOVED		1		
					S4-I103	ON SCHOOL DAYS WHEN CHILDREN ARE PRESENT	TO BE REMOVED				

NOTE:
FOR SIGN REMOVAL TOTAL, SEE SHEET 680

AECOM
303 EAST WACKER DRIVE, SUITE 1400
CHICAGO, IL 60601-5276
PHONE: (312) 373-7700 FAX: (312) 373-6800

USER NAME = muniza	DESIGNED - APA	REVISED -	STATE OF ILLINOIS DEPARTMENT OF TRANSPORTATION	SIGN REMOVAL SCHEDULE
	DRAWN - APA	REVISED -		
PLOT SCALE = 100.0000 ' / in.	CHECKED - TJW	REVISED -		SCALE: NONE SHEET 4 OF 6 SHEETS STA. TO STA.
PLOT DATE = 2/7/2025	DATE - 02/06/2025	REVISED -		

F.A.P. RTE.	SECTION	COUNTY	TOTAL SHEETS	SHEET NO.
326	2024-1052-N,C,SW,FL	MCHENRY	941	678
		CONTRACT NO. 62X94		
	ILLINOIS	FED. AID PROJECT		

MODEL: Default
FILE NAME: pw:\\aecom-na-pw.bentley.com:AECOM_DS21_NA_2020\Documents\60632011-IL-47W900-CADW10_CAD\03_SHEETS\Civil\D160X17-sht-sign-schedule-04.dgn

SIGN REMOVAL SCHEDULE – SHEET 05 (CONTINUED):

SIGN NO.	DIRECTION	ROADWAY	STATION	OFFSET	CODE	LEGEND/DESCRIPTION	ACTION	REMOVE SIGN PANEL ASSEMBLY - TYPE A (EACH)	REMOVE SIGN PANEL ASSEMBLY - TYPE B (EACH)	REMOVE SIGN PANEL - TYPE 1 (SQ FT)	REMOVE SIGN PANEL - TYPE 2 (SQ FT)
R-SGN5-32	SB	IL ROUTE 47	201+38.95	63.08' LT	D3-1	STREET NAME: NORTH ST	TO BE REMOVED	1			
					D3-1	STREET NAME: SEMINARY AVE	TO BE REMOVED				
R-SGN5-33	SB	IL ROUTE 47	201+06.00	46.07' LT	S1-1	SCHOOL ZONE	TO BE REMOVED				
					R10-11b	NO TURN ON RED	TO BE REMOVED		1		
					S4-I103	ON SCHOOL DAYS WHEN CHILDREN ARE PRESENT	TO BE REMOVED				
R-SGN5-34	WB	IL ROUTE 120	66+72.14	31.01' LT	M3-4	WEST	TO BE REMOVED	1			
					M1-I100	IL ROUTE 120	TO BE REMOVED				
R-SGN5-35	WB	IL ROUTE 120	66+71.73	17.76' LT	CUSTOM	ILL RTE 47, EASTWOOD DR, SEMINARY AV	TO BE REMOVED				10.00
R-SGN5-36	EB	IL ROUTE 120	66+28.24	33.87' RT	D3-1	STREET NAME: W HENRY AVE	TO BE REMOVED	1			
					D3-1	STREET NAME: N SEMINARY AVE	TO BE REMOVED				
R-SGN5-37	EB	IL ROUTE 120	66+50.97	26.93' RT	M1-I100	IL RTE 47	TO BE REMOVED				
					M6-4	DIRECTIONAL ARROW AUXILIARY	TO BE REMOVED		1		
					M1-I100	IL RTE 120	TO BE REMOVED				
					M6-3	DIRECTIONAL ARROW AUXILIARY	TO BE REMOVED				
R-SGN5-38	EB	IL ROUTE 120	66+67.54	36.46' RT	R10-11b	NO TURN ON RED	TO BE REMOVED		1		
					S4-I103	ON SCHOOL DAYS WHEN CHILDREN ARE PRESENT	TO BE REMOVED				
R-SGN5-39	EB	IL ROUTE 120	66+98.46	19.87' RT	S1-1	SCHOOL ZONE	TO BE REMOVED		1		
					W16-7P	DOWNWARD ARROW	TO BE REMOVED				
R-SGN5-40	SB	IL ROUTE 47	199+99.91	46.47' LT	R10-11b	NO TURN ON RED	TO BE REMOVED		1		
					S4-I103	ON SCHOOL DAYS WHEN CHILDREN ARE PRESENT	TO BE REMOVED				
R-SGN5-41	SB	IL ROUTE 47	199+99.87	34.04' LT	CUSTOM	ILL RTE 120, MCHENRY AVE	TO BE REMOVED				10.00
R-SGN5-42	SB	IL ROUTE 47	199+76.21	42.54' LT	M3-3	SOUTH	TO BE REMOVED	1			
					M1-I100	IL ROUTE 47	TO BE REMOVED				

SIGN REMOVAL SCHEDULE – SHEET 08:

SIGN NO.	DIRECTION	ROADWAY	STATION	OFFSET	CODE	LEGEND/DESCRIPTION	ACTION	REMOVE SIGN PANEL ASSEMBLY - TYPE A (EACH)	REMOVE SIGN PANEL ASSEMBLY - TYPE B (EACH)	REMOVE SIGN PANEL - TYPE 1 (SQ FT)	REMOVE SIGN PANEL - TYPE 2 (SQ FT)
R-SGN8-01	WB	SOUTHVIEW	204+88.96	50.24' RT	R7-1	NO PARKING ANY TIME	TO BE REMOVED			1.50	
R-SGN8-02	WB	LAKE AVE	175+72.35	35.75' LT	CUSTOM	ADOPT A HIGHWAY, JEWEL OSCO, KEEP	TO BE REMOVED		1		
R-SGN8-03	WB	LAKE AVE	173+95.04	29.19' LT	R7-1	NO PARKING ANY TIME	TO BE REMOVED			1.50	
R-SGN8-04	WB	LAKE AVE	172+00.37	23.61' LT	R7-1	NO PARKING ANY TIME	TO BE REMOVED			1.50	
R-SGN8-05	WB	LAKE AVE	170+71.12	22.63' LT	R7-1	NO PARKING ANY TIME	TO BE REMOVED			1.50	

SIGN REMOVAL SCHEDULE – SHEET 09:

SIGN NO.	DIRECTION	ROADWAY	STATION	OFFSET	CODE	LEGEND/DESCRIPTION	ACTION	REMOVE SIGN PANEL ASSEMBLY - TYPE A (EACH)	REMOVE SIGN PANEL ASSEMBLY - TYPE B (EACH)	REMOVE SIGN PANEL - TYPE 1 (SQ FT)	REMOVE SIGN PANEL - TYPE 2 (SQ FT)
R-SGN7-01	EB	LAKE AVE	180+65.95	28.25' RT	CUSTOM	ADOPT A HIGHWAY, WOODSTOCK, KEEP WOODSTOCK CLEAN	TO BE REMOVED		1		
R-SGN9-02	EB	LAKE AVE	181+58.45	41.29' RT	R1-1	STOP	TO BE REMOVED			9.00	
R-SGN9-03	WB	LAKE AVE	182+02.36	25.20' LT	R10-7	DO NOT BLOCK INTERSECTION	TO BE REMOVED			5.00	
R-SGN9-04	WB	LAKE AVE	181+35.18	56.99' LT	R1-1	STOP	TO BE REMOVED			9.00	
R-SGN9-05	WB	LAKE AVE	181+32.94	44.43' LT	D3-1	STREET SIGN: LAKE AVE	TO BE REMOVED	1			
					D3-1	STREET SIGN: MARTHA LN	TO BE REMOVED				
R-SGN9-06	EB	MCCONNELL RD	140+57.53	24.38' RT	CUSTOM	ADOPT A HIGHWAY, ONE MILE, KEEP WOODSTOCK	TO BE REMOVED		1		

NOTE:
FOR SIGN REMOVAL TOTAL, SEE SHEET 680

AECOM
303 EAST WACKER DRIVE, SUITE 1400
CHICAGO, IL 60601-5276
PHONE: (312) 373-7700 FAX: (312) 373-6800

USER NAME = muniza	DESIGNED - APA	REVISED -
	DRAWN - APA	REVISED -
PLOT SCALE = 100.0000 ' / in.	CHECKED - TJW	REVISED -
PLOT DATE = 2/7/2025	DATE - 02/06/2025	REVISED -

STATE OF ILLINOIS
DEPARTMENT OF TRANSPORTATION

SIGN REMOVAL SCHEDULE

SCALE: NONE | SHEET 5 OF 6 SHEETS | STA. | TO STA.

F.A.P. RTE.	SECTION	COUNTY	TOTAL SHEETS	SHEET NO.
326	2024-1052-N,C,SW,FL	MCHENRY	941	679
		CONTRACT NO. 62X94		
		ILLINOIS	FED. AID PROJECT	

MODEL: Default
FILE NAME: pw:\\aecom-na-pw.bentley.com:AECOM_0521_NA_2020\Documents\60632011-IL-471900-CAD91D_CAD\03_SHEETS\CivilD160X17-sht-sign-schedule-05.dgn

SIGN REMOVAL SCHEDULE – SHEET 10:

SIGN NO.	DIRECTION	ROADWAY	STATION	OFFSET	CODE	LEGEND/DESCRIPTION	ACTION	REMOVE SIGN PANEL ASSEMBLY - TYPE A (EACH)	REMOVE SIGN PANEL ASSEMBLY - TYPE B (EACH)	REMOVE SIGN PANEL - TYPE 1 (SQ FT)	REMOVE SIGN PANEL - TYPE 2 (SQ FT)
R-SGN10-01	EB	SOUTH ST	111+21.78	19.82' RT	R7-1	NO PARKING ANY TIME	TO BE REMOVED			1.50	
R-SGN10-02	EB	SOUTH ST	112+20.92	20.42' RT	R7-1	NO PARKING ANY TIME	TO BE REMOVED			1.50	
R-SGN10-03	WB	SOUTH ST	111+59.48	19.21' LT	R7-1	NO PARKING ANY TIME	TO BE REMOVED			1.50	
R-SGN10-04	EB	COUNTRY CLUB RD	116+58.09	25.98' RT	CUSTOM	ADOPT A HIGHWAY, WOODSTOCK HIGH SCHOOL, KEEP WOODSTOCK CLEAN	TO BE REMOVED		1		
R-SGN10-05	WB	COUNTRY CLUB RD	116+75.94	36.41' LT	R3-8b	LANE CONTROL PLAQUE (LEFT, THRU, RIGHT)	TO BE REMOVED				10.00

SIGN REMOVAL SCHEDULE – SHEET 11:

SIGN NO.	DIRECTION	ROADWAY	STATION	OFFSET	CODE	LEGEND/DESCRIPTION	ACTION	REMOVE SIGN PANEL ASSEMBLY - TYPE A (EACH)	REMOVE SIGN PANEL ASSEMBLY - TYPE B (EACH)	REMOVE SIGN PANEL - TYPE 1 (SQ FT)	REMOVE SIGN PANEL - TYPE 2 (SQ FT)
R-SGN11-01	SB	IRVING AVE	204+16.86	18.49' LT	R3-8	ADVANCE LANE CONTROL: LEFT ONLY, THRU/RIGHT	TO BE REMOVED			6.25	

SIGN REMOVAL SCHEDULE – SHEET 12:

SIGN NO.	DIRECTION	ROADWAY	STATION	OFFSET	CODE	LEGEND/DESCRIPTION	ACTION	REMOVE SIGN PANEL ASSEMBLY - TYPE A (EACH)	REMOVE SIGN PANEL ASSEMBLY - TYPE B (EACH)	REMOVE SIGN PANEL - TYPE 1 (SQ FT)	REMOVE SIGN PANEL - TYPE 2 (SQ FT)
R-SGN12-01	WB	IL ROUTE 120	65+45.48	29.91' LT	W3-1	STOP AHEAD	TO BE REMOVED	1			
					W16-8P	ADVANCE STREET NAME PLAQUE: MADISON ST	TO BE REMOVED				
R-SGN12-02	WB	IL ROUTE 120	64+05.83	21.92' LT	M3-4	WEST	TO BE REMOVED		1		
					M1-I100	IL RTE 120	TO BE REMOVED				
					M5-1	ADVANCE TURN AUXILIARY	TO BE REMOVED				
R-SGN12-03	EB	IL ROUTE 120	69+64.71	21.60' RT	R2-1	SPEED LIMIT 30	TO BE REMOVED			7.5	

SIGN REMOVAL SCHEDULE – TOTALS:

SHEET	REMOVE SIGN PANEL ASSEMBLY - TYPE A (EACH)	REMOVE SIGN PANEL ASSEMBLY - TYPE B (EACH)	REMOVE SIGN PANEL - TYPE 1 (SQ FT)	REMOVE SIGN PANEL - TYPE 2 (SQ FT)
SHEET 01	9	4	183.00	20.00
SHEET 02	4	0	164.19	0.00
SHEET 03	1	0	109.00	0.00
SHEET 04	6	3	107.50	60.00
SHEET 05	9	18	72.00	40.00
SHEET 08	0	1	6.00	0.00
SHEET 09	1	2	23.00	0.00
SHEET 10	0	1	4.50	10.00
SHEET 11	0	0	6.25	0.00
SHEET 12	1	1	7.5	0.00
TOTAL	31	30	682.94	130.00

AECOM
303 EAST WACKER DRIVE, SUITE 1400
CHICAGO, IL 60601-5276
PHONE: (312) 373-7700 FAX: (312) 373-6800

USER NAME = muniza	DESIGNED - APA	REVISED -
	DRAWN - APA	REVISED -
PLOT SCALE = 100.0000 ' / in.	CHECKED - TJW	REVISED -
PLOT DATE = 2/7/2025	DATE - 02/06/2025	REVISED -

STATE OF ILLINOIS
DEPARTMENT OF TRANSPORTATION

SIGN REMOVAL SCHEDULE

SCALE: NONE | SHEET 6 OF 6 SHEETS | STA. | TO STA.

F.A.P. RTE.	SECTION	COUNTY	TOTAL SHEETS	SHEET NO.
326	2024-1052-N,C,SW,FL	MCHENRY	941	680
		CONTRACT NO. 62X94		
		ILLINOIS	FED. AID PROJECT	

MODEL: Default
FILE NAME: pw:\\aecom-na-pw.bentley.com:AECOM DS21_NA_2020\Documents\60632011-IL-47\900-CAD\910_CAD\03_SHEETS\Civil\D160X17-sht-sign-schedule-06.dgn

PROPOSED SIGN SCHEDULE:

SIGN NO.	SIGN FACING DIRECTION	ROADWAY	STATION	OFFSET	CODE	LEGEND/DESCRIPTION	PROPOSED DIMENSIONS		SIGN PANEL - TYPE 1	SIGN PANEL - TYPE 2	SIGN PANEL - TYPE 3	OBJECT MARKER - TYPE 1	OBJECT MARKER - TYPE 3	TELESCOPING STEEL SIGN SUPPORT	BASE FOR TELESCOPING STEEL SIGN SUPPORT	METAL POST - TYPE A	METAL POST - TYPE B
							WIDTH (FT)	HEIGHT (FT)	(SQ FT)	(SQ FT)	(SQ FT)	(EACH)	(EACH)	(FT)	(EACH)	(FT)	(FT)
P-SGN1-01	NORTH	IL ROUTE 47	93+70.00	41.50' RT	D3-1	STREET NAME: DAVIS RD	3.00	1.00	3.00					14.00			
					D3-1	STREET NAME: EASTWOOD DR	4.25	1.00	4.25								
P-SGN1-02	EAST	IL ROUTE 47	95+40.00	45.00' RT	R1-1	STOP	3.00	3.00	9.00					15.00			
P-SGN1-03	NORTH	IL ROUTE 47	95+40.00	45.00' RT	D1-2	HARVARD WITH ARROW, CRYSTAL LAKE WITH ARROW	5.50	2.50		13.75							27.00
P-SGN1-04	NORTH	IL ROUTE 47	96+20.12	47.08' RT	CUSTOM	HISTORIC WOODSTOCK SQUARE	2.00	2.50	5.00					17.50			
					R2-1	SPEED LIMIT 35	2.50	3.00	7.50								
P-SGN1-05	NB	IL ROUTE 47	98+20.12	60.08' RT	M1-4	US RTE 14	3.00	3.00	9.00					20.00			
					M6-4	DIRECTIONAL ARROW AUXILIARY	1.75	1.25	2.19								
					M1-I100	IL RTE 47	3.50	2.50	8.75								
					M6-3	DIRECTIONAL ARROW AUXILIARY	1.75	1.25	2.19								
P-SGN1-06	WEST	IL ROUTE 47	99+66.08	78.07' RT	R10-5	LEFT ON GREEN ARROW ONLY (FACING WEST)	2.50	3.00	7.50					19.00			
	EAST	IL ROUTE 47			R4-7	KEEP RIGHT (FACING EAST)	2.00	2.50	5.00								
					OM1-3	OBJECT MARKER TYPE 1 (YELLOW)	1.50	1.50				1					
P-SGN1-07	NORTHWEST	IL ROUTE 47	99+90.15	70.38' RT	R5-1	DO NOT ENTER	2.50	2.50	6.25					13.00	1		
P-SGN1-08	WEST	IL ROUTE 47	100+18.80	163.62' RT	R3-5R	RIGHT TURN ONLY	2.50	3.00	7.50					15.00			
P-SGN1-09	WEST	IL ROUTE 47	100+34.81	64.92' RT	M1-I100	IL RTE 47	2.00	2.00	4.00					18.50			
					M6-3	DIRECTIONAL ARROW AUXILIARY	1.75	1.25	2.19								
					M1-4	US RTE 14	2.00	2.00	4.00								
					M6-4	DIRECTIONAL ARROW AUXILIARY	1.75	1.25	2.19								
P-SGN1-10	NORTH	IL ROUTE 47	101+05.37	53.98' RT	M3-1	NORTH	2.00	1.00	2.00	ATTACH TO LIGHT POLE							
					M1-I100	IL RTE 47	2.00	2.00	4.00								
P-SGN1-11	WEST	IL ROUTE 47	93+99.92	71.88' LT	R1-1	STOP	3.00	3.00	9.00					15.00			
P-SGN1-12	SOUTH	IL ROUTE 47	95+85.81	57.12' LT	R3-8a	U-TURN AND THRU LANES	4.00	3.00		12.00							28.00
					R3-5R	RIGHT TURN ONLY	2.50	3.00	7.50							13.50	
P-SGN1-13	SOUTH	IL ROUTE 47	99+25.12	11.52' LT	R4-7	KEEP RIGHT (FACING NORTH)	2.00	2.50	5.00					14.00	1		
					OM1-3	OBJECT MARKER TYPE 1 (YELLOW)	1.50	1.50				1					
P-SGN1-14	SOUTH	IL ROUTE 47	100+72.90	11.50' RT	R4-7	KEEP RIGHT (FACING SOUTH)	2.00	2.50	5.00					14.00	1		
					OM1-3	OBJECT MARKER TYPE 1 (YELLOW)	1.50	1.50				1					
P-SGN1-15	NORTH	IL ROUTE 47	100+72.90	11.50' RT	R3-5	DUAL LEFT TURN ONLY	3.00	2.00	6.00								
P-SGN1-16	SOUTH	IL ROUTE 47	102+35.55	60.00' LT	R3-5R	RIGHT TURN ONLY	2.50	3.00	7.50					15.00			
P-SGN1-17	NORTH	IL ROUTE 47	104+90.00	4.00' LT	R4-7	KEEP RIGHT (FACING NORTH)	2.00	2.50	5.00					14.00	1		
					OM1-3	OBJECT MARKER TYPE 1 (YELLOW)	1.50	1.50				1					
P-SGN1-18	SOUTH	IL ROUTE 47	106+30.00	6.50' RT	R4-7	KEEP RIGHT (FACING SOUTH)	2.00	2.50	5.00					14.00	1		
					OM1-3	OBJECT MARKER TYPE 1 (YELLOW)	1.50	1.50				1					
P-SGN1-19	SOUTH	IL ROUTE 47	108+55.00	5.50' LT	R4-7	KEEP RIGHT (FACING SOUTH)	2.00	2.50	5.00					14.00	1		
					OM1-3	OBJECT MARKER TYPE 1 (YELLOW)	1.50	1.50				1					
P-SGN1-20	SOUTH	IL ROUTE 47	109+75.00	5.50' RT	R4-7	KEEP RIGHT (FACING SOUTH)	2.00	2.50	5.00					14.00	1		
					OM1-3	OBJECT MARKER TYPE 1 (YELLOW)	1.50	1.50				1					
P-SGN1-21	NORTH	IL ROUTE 47	111+80.00	5.50' LT	R4-7	KEEP RIGHT (FACING NORTH)	2.00	2.50	5.00					14.00	1		
					OM1-3	OBJECT MARKER TYPE 1 (YELLOW)	1.50	1.50				1					
P-SGN1-22	SOUTH	IL ROUTE 47	112+95.00	5.50' RT	R4-7	KEEP RIGHT (FACING SOUTH)	2.00	2.50	5.00					14.00	1		
					OM1-3	OBJECT MARKER TYPE 1 (YELLOW)	1.50	1.50				1					
P-SGN1-23	NORTH	IL ROUTE 47	115+30.00	5.50' LT	R4-7	KEEP RIGHT (FACING NORTH)	2.00	2.50	5.00					14.00	1		
					OM1-3	OBJECT MARKER TYPE 1 (YELLOW)	1.50	1.50				1					
P-SGN1-24	SOUTH	IL ROUTE 47	104+90.00	4.00' LT	R3-6a	OPTIONAL MOVEMENT LANE CONTROL/U-TURN	2.50	3.00	7.50	SAME SIGN SUPPORT AS POST FOR P-SGN1-17							
P-SGN1-25	NORTH	IL ROUTE 47	106+30.00	6.50' RT	R3-6a	OPTIONAL MOVEMENT LANE CONTROL/U-TURN	2.50	3.00	7.50	SAME SIGN SUPPORT AS POST FOR P-SGN1-18							
P-SGN1-26	SOUTH	IL ROUTE 47	108+55.00	5.50' LT	R3-6a	OPTIONAL MOVEMENT LANE CONTROL/U-TURN	2.50	3.00	7.50	SAME SIGN SUPPORT AS POST FOR P-SGN1-19							

NOTE:
FOR PROPOSED SIGN SCHEDULE TOTAL, SEE SHEET 686H

AECOM
303 EAST WACKER DRIVE, SUITE 1400
CHICAGO, IL 60601-5276
PHONE: (312) 373-7700 FAX: (312) 373-6800

USER NAME = PIMSARNO	DESIGNED - OPS	REVISED -	
	DRAWN - OPS	REVISED -	
PLOT SCALE = 100.0000 ' / in.	CHECKED - TJW	REVISED -	
PLOT DATE = 02/10/25	DATE - 02/06/2025	REVISED -	

STATE OF ILLINOIS
DEPARTMENT OF TRANSPORTATION

PROPOSED SIGN SCHEDULE

SCALE: NONE | SHEET 1 OF 14 SHEETS | STA. | TO STA.

F.A.P. RTE.	SECTION	COUNTY	TOTAL SHEETS	SHEET NO.
326	2024-1052-N,C,SW,FL	MCHENRY	941	681
		CONTRACT NO. 62X94		
		ILLINOIS	FED. AID PROJECT	

MODEL: Default
FILE NAME: pw:\\aecom-na-pw.bentley.com:AECOM DS21 NA 2020\Documents\60863201-IL-47900-CAD910 CAD\03 SHEETS\{\vlID160X17-sht-dpn-schedule-07.dgn

PROPOSED SIGN SCHEDULE:

SIGN NO.	SIGN FACING DIRECTION	ROADWAY	STATION	OFFSET	CODE	LEGEND/DESCRIPTION	PROPOSED DIMENSIONS		SIGN PANEL - TYPE 1	SIGN PANEL - TYPE 2	SIGN PANEL - TYPE 3	OBJECT MARKER - TYPE 1	OBJECT MARKER - TYPE 3	TELESCOPING STEEL SIGN SUPPORT	BASE FOR TELESCOPING STEEL SIGN SUPPORT	METAL POST - TYPE A	METAL POST - TYPE B
							WIDTH (FT)	HEIGHT (FT)	(SQ FT)	(SQ FT)	(SQ FT)	(EACH)	(EACH)	(FT)	(EACH)	(FT)	(FT)
P-SGN1-27	NORTH	IL ROUTE 47	109+75.00	5.50' RT	R3-6a	OPTIONAL MOVEMENT LANE CONTROL/U-TURN	2.50	3.00	7.50	SAME SIGN SUPPORT AS POST FOR P-SGN1-20							
P-SGN1-28	SOUTH	IL ROUTE 47	111+80.00	5.50' LT	R3-6a	OPTIONAL MOVEMENT LANE CONTROL/U-TURN	2.50	3.00	7.50	SAME SIGN SUPPORT AS POST FOR P-SGN1-21							
P-SGN1-29	NORTH	IL ROUTE 47	112+95.00	5.50' RT	R3-6a	OPTIONAL MOVEMENT LANE CONTROL/U-TURN	2.50	3.00	7.50	SAME SIGN SUPPORT AS POST FOR P-SGN1-22							
P-SGN1-30	SOUTH	IL ROUTE 47	115+30.00	5.50' LT	R3-6a	OPTIONAL MOVEMENT LANE CONTROL/U-TURN	2.50	3.00	7.50	SAME SIGN SUPPORT AS POST FOR P-SGN1-23							
P-SGN1-31	WEST	IL ROUTE 47	110+49.82	5.53' RT	R6-2R	ONE WAY	2.50	3.00	7.50					13.00	1		
P-SGN1-32	EAST	IL ROUTE 47	114+70.00	5.50' LT	R6-2R	ONE WAY	2.50	3.00	7.50					13.00	1		
P-SGN1-33	EAST	CATALPA LN	106+00.00	68.50' RT	R1-1	STOP	3.00	3.00	9.00					15.00			
P-SGN1-34	SOUTH	IL ROUTE 47	116+50.00	5.50' RT	R4-7	KEEP RIGHT (FACING SOUTH)	2.00	2.50	5.00					14.00	1		
					OM1-3	OBJECT MARKER TYPE 1 (YELLOW)	1.50	1.50	2.25								
P-SGN1-35	WEST	IL ROUTE 47	94+60.00	78.50' LT	D3-1	STREET NAME: EASTEWOOD DR	4.25	1.00	4.25					13.00			
P-SGN1-36	NORTH	IL ROUTE 47	99+25.12	11.52' LT	R3-5	DUAL LEFT TURN ONLY	3.00	2.00	6.00	SAME SIGN SUPPORT AS POST FOR P-SGN1-13							
P-SGN1-37	NORTHEAST	IL ROUTE 47	100+99.00	68.50' LT	M1-4	US RTE 14	3.00	3.00	9.00					20.00			
					M6-4	DIRECTIONAL ARROW AUXILIARY	1.75	1.25	2.19								
					M1-I100	IL RTE 47	3.50	2.50	8.75								
					M6-3	DIRECTIONAL ARROW AUXILIARY	1.75	1.25	2.19								
P-SGN1-38	SOUTH	IL ROUTE 47	103+30.00	59.00' RT	R2-1	SPEED LIMIT 35	2.50	3.00	7.50	ATTACH TO LIGHT POLE							
P-SGN1-39	NORTH	IL ROUTE 47	104+51.62	52.00' LT	D1-2	CRYSTAL LAKE WITH ARROW AND HARVARD WITH ARROW	5.50	2.50		13.75							27.00
P-SGN1-40	SOUTH	IL ROUTE 47	115+55.00	38.50' RT	R2-1	SPEED LIMIT 35	2.50	3.00	7.50					15.00			
P-SGN1-41	SOUTH	IL ROUTE 47	116+20.00	41.50' LT	R2-1	SPEED LIMIT 35	2.50	3.00	7.50					15.00			
P-SGN1-42	NORTH	IL ROUTE 47	93+00.00	40.50' RT	W11-15	BICYCLE AND PEDESTRIAN TRAFFIC	3.00	3.00	9.00					17.50			
					W11-15P	TRAIL CROSSING	1.50	1.50	2.25								
					W16-9P	AHEAD PLAQUE	2.00	1.00	2.00								
P-SGN1-43	NORTH	IL ROUTE 47	94+00.00	65.00' RT	W11-15	BICYCLE AND PEDESTRIAN TRAFFIC	3.00	3.00	9.00					16.00			
					W16-7P	LEFT DIAGONAL ARROW PLAQUE	2.00	1.00	2.00								
P-SGN1-44	SOUTH	IL ROUTE 47	94+65.00	46.00' RT	W11-15	BICYCLE AND PEDESTRIAN TRAFFIC	3.00	3.00	9.00					16.00			
					W16-7P	LEFT DIAGONAL ARROW PLAQUE	2.00	1.00	2.00								
P-SGN1-45	SOUTH	IL ROUTE 47	95+65.00	45.50' RT	W11-15	BICYCLE AND PEDESTRIAN TRAFFIC	3.00	3.00	9.00					17.50			
					W11-15P	TRAIL CROSSING	1.50	1.50	2.25								
					W16-9P	AHEAD PLAQUE	2.00	1.00	2.00								
P-SGN1-46	SOUTHWEST	IL ROUTE 47	98+05.10	75.10' RT	W11-15	BICYCLE AND PEDESTRIAN TRAFFIC	3.00	3.00	9.00					17.50			
					W11-15P	TRAIL CROSSING	1.50	1.50	2.25								
					W16-9P	AHEAD PLAQUE	2.00	1.00	2.00								
P-SGN1-47	SOUTHEAST	IL ROUTE 47	99+07.00	85.00' RT	W11-15	BICYCLE AND PEDESTRIAN TRAFFIC	3.00	3.00	9.00					16.00			
					W16-7P	LEFT DIAGONAL ARROW PLAQUE	2.00	1.00	2.00								
P-SGN1-48	NORTHEAST	IL ROUTE 47	100+80.00	70.00' RT	W11-15	BICYCLE AND PEDESTRIAN TRAFFIC	3.00	3.00	9.00					16.00			
					W16-7P	LEFT DIAGONAL ARROW PLAQUE	2.00	1.00	2.00								
P-SGN1-49	NORTH	IL ROUTE 47	101+77.85	43.52' RT	W11-15	BICYCLE AND PEDESTRIAN TRAFFIC	3.00	3.00	9.00					17.50			
					W11-15P	TRAIL CROSSING	1.50	1.50	2.25								
					W16-9P	AHEAD PLAQUE	2.00	1.00	2.00								
P-SGN1-50	SOUTH	IL ROUTE 47	104+40.00	60.00' RT	W11-15	BICYCLE AND PEDESTRIAN TRAFFIC	3.00	3.00	9.00					17.50			
					W11-15P	TRAIL CROSSING	1.50	1.50	2.25								
					W16-9P	AHEAD PLAQUE	2.00	1.00	2.00								
P-SGN1-51	SOUTH	IL ROUTE 47	105+43.01	67.45' RT	W11-15	BICYCLE AND PEDESTRIAN TRAFFIC	3.00	3.00	9.00					16.00			
					W16-7P	LEFT DIAGONAL ARROW PLAQUE	2.00	1.00	2.00								
P-SGN1-52	NORTH	IL ROUTE 47	106+18.00	50.50' RT	W11-15	BICYCLE AND PEDESTRIAN TRAFFIC	3.00	3.00	9.00					16.00			
					W16-7P	LEFT DIAGONAL ARROW PLAQUE	2.00	1.00	2.00								

NOTE:
FOR PROPOSED SIGN SCHEDULE TOTAL, SEE SHEET 686H

AECOM
303 EAST WACKER DRIVE, SUITE 1400
CHICAGO, IL 60601-5276
PHONE: (312) 373-7700 FAX: (312) 373-6800

USER NAME = PIMSARNO	DESIGNED - OPS	REVISED -	
	DRAWN - OPS	REVISED -	
PLOT SCALE = 100.0000 ' / in.	CHECKED - TJW	REVISED -	
PLOT DATE = 02/10/25	DATE - 02/06/2025	REVISED -	

STATE OF ILLINOIS
DEPARTMENT OF TRANSPORTATION

PROPOSED SIGN SCHEDULE

SCALE: NONE | SHEET 2 OF 14 SHEETS | STA. | TO STA.

F.A.P. RTE.	SECTION	COUNTY	TOTAL SHEETS	SHEET NO.
326	2024-1052-N,C,SW,FL	MCHENRY	941	682
		CONTRACT NO. 62X94		
	ILLINOIS FED. AID PROJECT			

MODEL: Default
FILE NAME: pw:\\aecom-na-pw.bentley.com:AECOM_0521_NA_2020\Documents\60632011-tl-417900-CAD\910_CAD\03_SHEETS\Civil\D160X17-sht-sign-schedule-07.dgn

PROPOSED SIGN SCHEDULE:

SIGN NO.	SIGN FACING DIRECTION	ROADWAY	STATION	OFFSET	CODE	LEGEND/DESCRIPTION	PROPOSED DIMENSIONS		SIGN PANEL - TYPE 1	SIGN PANEL - TYPE 2	SIGN PANEL - TYPE 3	OBJECT MARKER - TYPE 1	OBJECT MARKER - TYPE 3	TELESCOPING STEEL SIGN SUPPORT	BASE FOR TELESCOPING STEEL SIGN SUPPORT	METAL POST - TYPE A	METAL POST - TYPE B
							WIDTH (FT)	HEIGHT (FT)	(SQ FT)	(SQ FT)	(SQ FT)	(EACH)	(EACH)	(FT)	(EACH)	(FT)	(FT)
P-SGN1-53	NORTH	IL ROUTE 47	107+16.95	38.91' RT	W11-15	BICYCLE AND PEDESTRIAN TRAFFIC	3.00	3.00	9.00					17.50			
					W11-15P	TRAIL CROSSING	1.50	1.50	2.25								
					W16-9P	AHEAD PLAQUE	2.00	1.00	2.00								
P-SGN2-01	NORTH	IL ROUTE 47	116+50.42	5.68' RT	R3-6a	OPTIONAL MOVEMENT LANE CONTROL/U-TURN	2.50	3.00	7.50					13.00	1		
P-SGN2-02	NORTH	IL ROUTE 47	119+10.00	5.50' LT	R3-6a	OPTIONAL MOVEMENT LANE CONTROL/U-TURN	2.50	3.00	7.50								
P-SGN2-03	SOUTH	IL ROUTE 47	119+10.00	5.50' LT	R4-7	KEEP RIGHT (FACING SOUTH)	2.00	2.50	5.00					14.00	1		
					OM1-3	OBJECT MARKER TYPE 1 (YELLOW)	1.50	1.50				1					
P-SGN2-04	SOUTH	IL ROUTE 47	120+30.00	5.50' RT	R3-6a	OPTIONAL MOVEMENT LANE CONTROL/U-TURN	2.50	3.00	7.50								
P-SGN2-05	NORTH	IL ROUTE 47	120+30.00	5.50' RT	R4-7	KEEP RIGHT (FACING SOUTH)	2.00	2.50	5.00					14.00	1		
					OM1-3	OBJECT MARKER TYPE 1 (YELLOW)	1.50	1.50				1					
P-SGN2-06	NORTH	IL ROUTE 47	125+60.00	5.50' LT	R3-5L	LEFT TURN ONLY	3.00	2.50	7.50								
P-SGN2-07	SOUTH	IL ROUTE 47	125+60.00	5.50' LT	R4-7	KEEP RIGHT (FACING SOUTH)	2.00	2.50	5.00					14.00	1		
					OM1-3	OBJECT MARKER TYPE 1 (YELLOW)	1.50	1.50				1					
P-SGN2-08	SOUTH	IL ROUTE 47	126+90.00	4.50' RT	R3-5L	LEFT TURN ONLY	3.00	2.50	7.50								
P-SGN2-09	NORTH	IL ROUTE 47	126+90.00	4.50' RT	R4-7	KEEP RIGHT (FACING SOUTH)	2.00	2.50	5.00					14.00	1		
					OM1-3	OBJECT MARKER TYPE 1 (YELLOW)	1.50	1.50				1					
P-SGN2-10	NORTHWEST	IL ROUTE 47	119+63.85	67.69' LT	R1-1	STOP	3.00	3.00	9.00					15.00			
P-SGN2-11	WEST	IL ROUTE 47	120+38.36	66.48' LT	D3-1	STREET NAME: EASTWOOD DR	4.25	1.00	4.25					14.00			
					D3-1	STREET NAME: SOUTHVIEW DR	4.33	1.00	4.33								
P-SGN2-12	NB	IL ROUTE 47	127+99.78		NB-01-OH	NB IL-47, ROUNDABOUT WB LAKE AVE, EB LAKE AVE	17.50	8.50			148.75	SEE OVERHEAD SIGN STRUCTURE DETAILS FOR SIGN SUPPORTS AND QUANTITIES					
P-SGN2-13	SB	IL ROUTE 47	132+97.82		SB-01-OH	SB IL-47, ROUNDABOUT EB LAKE AVE, WB LAKE AVE	17.50	8.50			148.75	SEE OVERHEAD SIGN STRUCTURE DETAILS FOR SIGN SUPPORTS AND QUANTITIES					
P-SGN2-14	NB	IL ROUTE 47	135+75.00		NB-02-OH	NB IL-47, ROUNDABOUT EB MCCONNELL RD	13.50	8.50			114.75	SEE OVERHEAD SIGN STRUCTURE DETAILS FOR SIGN SUPPORTS AND QUANTITIES					
P-SGN2-15	SB	IL ROUTE 47	140+95.00		SB-02-OH	SB IL-47, ROUNDABOUT EB MCCONNELL RD	13.50	8.50			114.75	SEE OVERHEAD SIGN STRUCTURE DETAILS FOR SIGN SUPPORTS AND QUANTITIES					
P-SGN2-16	NORTH	IL ROUTE 47	127+85.68	33.56' RT	R3-5R	RIGHT TURN ONLY	3.00	2.50	7.50					14.50			
P-SGN2-17	NORTH	IL ROUTE 47	128+30.68	6.56' LT	R3-8	OPTIONAL MOVEMENT LANE CONTROL/U-TURN	3.00	3.00	9.00					13.00	1		
P-SGN2-18	SOUTH	IL ROUTE 47	134+60.00	30.00' LT	R3-8a	OPTIONAL MOVEMENT LANE CONTROL/U-TURN	4.00	3.00	12.00								28.00
P-SGN2-19	NORTH	IL ROUTE 47	135+04.95	28.85' RT	R3-8	OPTIONAL MOVEMENT LANE CONTROL/U-TURN	3.00	3.00	9.00					15.00			
P-SGN2-20	SOUTHWEST	IL ROUTE 47	128+02.00	47.50' LT	R2-1	SPEED LIMIT 35	2.50	3.00	7.50					15.00			
P-SGN2-21	NORTH	IL ROUTE 47	127+41.31	35.00' RT	W2-6	ROUNDABOUT AHEAD	3.00	3.00	9.00					16.50			
					W13-1	ADVISORY SPEED: 15 M.P.H.	1.50	1.50	2.25								
P-SGN2-22	NORTHEAST	IL ROUTE 47	136+00.00	26.00' LT	W2-6	ROUNDABOUT AHEAD	3.00	3.00	9.00					16.50			
					W13-1	ADVISORY SPEED: 15 M.P.H.	1.50	1.50	2.25								
P-SGN2-23	SOUTHWEST	IL ROUTE 47	128+45.00	48.00' RT	W11-15	BICYCLE AND PEDESTRIAN TRAFFIC	3.00	3.00	9.00					17.50			
					W11-15P	TRAIL CROSSING	1.50	1.50	2.25								
					W16-9P	AHEAD PLAQUE	2.00	1.00	2.00								
P-SGN2-24	SOUTHWEST	IL ROUTE 47	129+45.00	75.50' RT	W11-15	BICYCLE AND PEDESTRIAN TRAFFIC	3.00	3.00	9.00					16.00			
					W16-7P	LEFT DIAGONAL ARROW PLAQUE	2.00	1.00	2.00								
P-SGN2-25	NORTH	IL ROUTE 47	131+65.00	36.50' RT	W11-15	BICYCLE AND PEDESTRIAN TRAFFIC	3.00	3.00	9.00					17.50			
					W11-15P	TRAIL CROSSING	1.50	1.50	2.25								
					W16-9P	AHEAD PLAQUE	2.00	1.00	2.00								
P-SGN2-26	NORTHEAST	IL ROUTE 47	130+75.50	84.00' RT	W11-15	BICYCLE AND PEDESTRIAN TRAFFIC	3.00	3.00	9.00					16.00			
					W16-7P	LEFT DIAGONAL ARROW PLAQUE	2.00	1.00	2.00								
P-SGN2-27	SOUTH	IL ROUTE 47	132+00.00	47.00' RT	W11-15	BICYCLE AND PEDESTRIAN TRAFFIC	3.00	3.00	9.00					17.50			
					W11-15P	TRAIL CROSSING	1.50	1.50	2.25								
					W16-9P	AHEAD PLAQUE	2.00	1.00	2.00								
P-SGN2-28	SOUTH	IL ROUTE 47	133+00.00	45.00' RT	W11-15	BICYCLE AND PEDESTRIAN TRAFFIC	3.00	3.00	9.00					16.00			
					W16-7P	LEFT DIAGONAL ARROW PLAQUE	2.00	1.00	2.00								

NOTE:
FOR PROPOSED SIGN SCHEDULE TOTAL, SEE SHEET 686H

AECOM
303 EAST WACKER DRIVE, SUITE 1400
CHICAGO, IL 60601-5276
PHONE: (312) 373-7700 FAX: (312) 373-6800

USER NAME = PIMSARNO	DESIGNED - OPS	REVISED -	
	DRAWN - OPS	REVISED -	
PLOT SCALE = 100.0000 ' / in.	CHECKED - TJW	REVISED -	
PLOT DATE = 02/10/25	DATE - 02/06/2025	REVISED -	

STATE OF ILLINOIS
DEPARTMENT OF TRANSPORTATION

PROPOSED SIGN SCHEDULE

SCALE: NONE | SHEET 3 OF 14 SHEETS | STA. | TO STA.

F.A.P. RTE.	SECTION	COUNTY	TOTAL SHEETS	SHEET NO.
326	2024-1052-N,C,SW,FL	MCHENRY	941	683
		CONTRACT NO. 62X94		
	ILLINOIS FED. AID PROJECT			

MODEL: Default
FILE NAME: pw:\\aecom-na-pw.bentley.com:AECOM DS21 NA 2020\Documents\60632011-IL-47\900-CAD\910 CAD\03 SHEETS\Civil\D160X17-sht-sign-schedule-07.dgn

PROPOSED SIGN SCHEDULE:

SIGN NO.	SIGN FACING DIRECTION	ROADWAY	STATION	OFFSET	CODE	LEGEND/DESCRIPTION	PROPOSED DIMENSIONS		SIGN PANEL - TYPE 1	SIGN PANEL - TYPE 2	SIGN PANEL - TYPE 3	OBJECT MARKER - TYPE 1	OBJECT MARKER - TYPE 3	TELESCOPING STEEL SIGN SUPPORT	BASE FOR TELESCOPING STEEL SIGN SUPPORT	METAL POST - TYPE A	METAL POST - TYPE B
							WIDTH (FT)	HEIGHT (FT)	(SQ FT)	(SQ FT)	(SQ FT)	(EACH)	(EACH)	(FT)	(EACH)	(FT)	(FT)
P-SGN2-29	NORTH	IL ROUTE 47	134+68.00	29.00' RT	W11-15	BICYCLE AND PEDESTRIAN TRAFFIC	3.00	3.00	9.00					18.50			
					W11-15P	TRAIL CROSSING	1.50	1.50	2.25								
					W16-9P	AHEAD PLAQUE	2.00	1.00	2.00								
P-SGN2-30	NORTH	IL ROUTE 47	133+66.50	31.00' RT	W11-15	BICYCLE AND PEDESTRIAN TRAFFIC	3.00	3.00	9.00					16.00			
					W16-7P	LEFT DIAGONAL ARROW PLAQUE	2.00	1.00	2.00								
P-SGN2-31	SOUTHWEST	IL ROUTE 47	137+95.00	85.50' RT	W11-15	BICYCLE AND PEDESTRIAN TRAFFIC	3.00	3.00	9.00					17.50			
					W11-15P	TRAIL CROSSING	1.50	1.50	2.25								
					W16-9P	AHEAD PLAQUE	2.00	1.00	2.00								
P-SGN2-32	SOUTHWEST	IL ROUTE 47	138+67.00	157.00' RT	W11-15	BICYCLE AND PEDESTRIAN TRAFFIC	3.00	3.00	9.00					16.00			
					W16-7P	LEFT DIAGONAL ARROW PLAQUE	2.00	1.00	2.00								
P-SGN3-01	SOUTH	IL ROUTE 47	143+70.00	5.00' LT	R4-7	KEEP RIGHT (FACING SOUTH)	2.00	2.50	5.00					14.00	1		
					OM1-3	OBJECT MARKER TYPE 1 (YELLOW)	1.50	1.50	2.25				1				
P-SGN3-02	SOUTH	IL ROUTE 47	145+15.00	5.00' RT	R4-7	KEEP RIGHT (FACING SOUTH)	2.00	2.50	5.00					14.00	1		
					OM1-3	OBJECT MARKER TYPE 1 (YELLOW)	1.50	1.50	2.25				1				
P-SGN3-03	SOUTHEAST	IL ROUTE 47	151+65.00	4.00' LT	R4-7	KEEP RIGHT (FACING SOUTH)	2.00	2.50	5.00					14.00	1		
					OM1-3	OBJECT MARKER TYPE 1 (YELLOW)	1.50	1.50				1					
P-SGN3-04	SOUTHEAST	IL ROUTE 47	152+82.00	5.50' RT	R4-7	KEEP RIGHT (FACING SOUTH)	2.00	2.50	5.00					14.00	1		
					OM1-3	OBJECT MARKER TYPE 1 (YELLOW)	1.50	1.50				1					
P-SGN3-05	NORTH	IL ROUTE 47	143+70.00	5.00' LT	R3-5L	LEFT TURN ONLY	3.00	2.50	7.50	SAME SIGN SUPPORT AS POST FOR P-SGN3-01							
P-SGN3-06	NORTH	IL ROUTE 47	145+15.00	5.00' RT	R3-5L	LEFT TURN ONLY	3.00	2.50	7.50	SAME SIGN SUPPORT AS POST FOR P-SGN3-02							
P-SGN3-07	NORTHWEST	IL ROUTE 47	151+65.00	4.00' LT	R3-6a	OPTIONAL MOVEMENT LANE CONTROL/U-TURN	2.50	3.00	7.50	SAME SIGN SUPPORT AS POST FOR P-SGN3-03							
P-SGN3-08	NORTHWEST	IL ROUTE 47	152+82.00	5.50' RT	R3-5L	LEFT TURN ONLY	3.00	2.50	7.50	SAME SIGN SUPPORT AS POST FOR P-SGN3-04							
P-SGN3-09	EAST	IL ROUTE 47	146+69.82	0.27' RT	R6-2R	ONE WAY	2.50	3.00	7.50					13.00	1		
P-SGN3-10	WEST	IL ROUTE 47	148+40.00	6.50' LT	R6-2R	ONE WAY	2.50	3.00	7.50					13.00	1		
P-SGN3-11	NORTHWEST	IL ROUTE 47	149+67.30	7.88' LT	R6-2R	ONE WAY	2.50	3.00	7.50					13.00	1		
P-SGN3-12	SOUTHWEST	IL ROUTE 47	155+53.00	0.00'	R6-2R	ONE WAY	2.50	3.00	7.50					13.00	1		
P-SGN3-13	NORTHEAST	IL ROUTE 47	156+96.72	0.00'	R6-2R	ONE WAY	2.50	3.00	7.50					13.00	1		
P-SGN3-14	SOUTHWEST	IL ROUTE 47	157+25.00	0.00'	R6-2R	ONE WAY	2.50	3.00	7.50					13.00	1		
P-SGN3-15	NORTHEAST	IL ROUTE 47	161+65.00	5.50' RT	R6-2R	ONE WAY	2.50	3.00	7.50					13.00	1		
P-SGN3-16	NORTHEAST	IL ROUTE 47	163+86.60	3.36' LT	R6-2R	ONE WAY	2.50	3.00	7.50					13.00	1		
P-SGN3-17	SOUTHWEST	IL ROUTE 47	159+90.00	5.50' LT	R4-7	KEEP RIGHT (FACING SOUTHEAST)	2.00	2.50	5.00					14.00	1		
					OM1-3	OBJECT MARKER TYPE 1 (YELLOW)	1.50	1.50				1					
P-SGN3-18	NORTHEAST	IL ROUTE 47	159+90.00	5.50' LT	R3-5L	LEFT TURN ONLY	3.00	2.50	7.50								
P-SGN3-19	NORTHEAST	IL ROUTE 47	161+12.00	5.50' RT	R4-7	KEEP RIGHT (FACING SOUTHEAST)	2.00	2.50	5.00					14.00	1		
					OM1-3	OBJECT MARKER TYPE 1 (YELLOW)	1.50	1.50				1					
P-SGN3-20	SOUTHWEST	IL ROUTE 47	161+12.00	5.50' RT	R3-5L	LEFT TURN ONLY	3.00	2.50	7.50								
P-SGN3-21	NORTH	IL ROUTE 47	143+71.74	36.85' LT	W2-6	ROUNDABOUT AHEAD	3.00	3.00	9.00					16.50			
					W13-1	ADVISORY SPEED: 15 M.P.H.	1.50	1.50	2.25								
P-SGN3-22	SOUTHEAST	IL ROUTE 47	155+35.00	37.50' RT	CUSTOM	DRIVER SERVICES FACILITY WITH LEFT ARROW	3.50	3.50		12.25				15.50			
P-SGN3-23	NORTHWEST	IL ROUTE 47	159+18.00	37.00' LT	CUSTOM	DRIVER SERVICES FACILITY WITH RIGHT ARROW	3.50	3.50		12.25				15.50			
P-SGN4-01	SOUTHWEST	IL ROUTE 47	165+85.92	6.66' LT	R6-2R	ONE WAY	2.50	3.00	7.50					13.00	1		
P-SGN4-02	EAST	COUNTRY CLUB RD	167+04.60	88.87' RT	M1-I100	ILLINOIS STATE ROUTE 47	3.00	3.00	9.00					16.25			
					M6-4	DIRECTIONAL ARROW AUXILIARY	1.75	1.25	2.19								
P-SGN4-03	SOUTHEAST	IL ROUTE 47	166+45.00	6.75' LT	CUSTOM	OPTIONAL MOVEMENT LANE CONTROL/U-TURN	2.50	3.00	7.50					14.00	1		
P-SGN4-04	NORTHWEST	IL ROUTE 47	166+45.00	6.75' LT	R4-7	KEEP RIGHT (FACING SOUTHEAST)	2.00	2.50	5.00								
					OM1-3	OBJECT MARKER TYPE 1 (YELLOW)	1.50	1.50				1					

NOTE:
FOR PROPOSED SIGN SCHEDULE TOTAL, SEE SHEET 686H

AECOM
303 EAST WACKER DRIVE, SUITE 1400
CHICAGO, IL 60601-5276
PHONE: (312) 373-7700 FAX: (312) 373-6800

USER NAME = PIMSARNO	DESIGNED - OPS	REVISED -	
	DRAWN - OPS	REVISED -	
PLOT SCALE = 100.0000 ' / in.	CHECKED - TJW	REVISED -	
PLOT DATE = 02/10/25	DATE - 02/06/2025	REVISED -	

STATE OF ILLINOIS
DEPARTMENT OF TRANSPORTATION

PROPOSED SIGN SCHEDULE

SCALE: NONE | SHEET 4 OF 14 SHEETS | STA. | TO STA.

F.A.P. RTE.	SECTION	COUNTY	TOTAL SHEETS	SHEET NO.
326	2024-1052-N,C,SW,FL	MCHENRY	941	684
		CONTRACT NO. 62X94		
	ILLINOIS FED. AID PROJECT			

MODEL: Default
FILE NAME: pw:\\aecom-na-pw.bentley.com:AECOM DS21 NA 2020\Documents\60632011-IL-417900-CAD\910 CAD\03 SHEETS\Civil\D160X17-sht-sign-schedule-07.dgn

PROPOSED SIGN SCHEDULE:

SIGN NO.	SIGN FACING DIRECTION	ROADWAY	STATION	OFFSET	CODE	LEGEND/DESCRIPTION	PROPOSED DIMENSIONS		SIGN PANEL - TYPE 1	SIGN PANEL - TYPE 2	SIGN PANEL - TYPE 3	OBJECT MARKER - TYPE 1	OBJECT MARKER - TYPE 3	TELESCOPING STEEL SIGN SUPPORT	BASE FOR TELESCOPING STEEL SIGN SUPPORT	METAL POST - TYPE A	METAL POST - TYPE B
							WIDTH (FT)	HEIGHT (FT)	(SQ FT)	(SQ FT)	(SQ FT)	(EACH)	(EACH)	(FT)	(EACH)	(FT)	(FT)
P-SGN4-05	SOUTH EAST	SOUTH STREET	167+85.00	6.50' RT	R4-7	KEEP RIGHT (FACING SOUTHEAST)	2.00	2.50	5.00								
					OM1-3	OBJECT MARKER TYPE 1 (YELLOW)	1.50	1.50				1		14.00	1		
P-SGN4-06	NORTHWEST	IL ROUTE 47	167+85.00	6.50' RT	R3-8	OPTIONAL MOVEMENT LANE CONTROL/U-TURN	2.50	3.00	7.50								
P-SGN4-07	SOUTHWEST	IL ROUTE 47	170+15.29	6.89' RT	R6-2R	ONE WAY	2.50	3.00	7.50					13	1		
P-SGN4-08	NORTHEAST	IL ROUTE 47	170+64.70	2.71' RT	R6-2R	ONE WAY	2.50	3.00	7.50					13	1		
P-SGN4-09	SOUTHEAST	IL ROUTE 47	172+65.00	5.50' LT	R3-5L	LEFT TURN ONLY	3.00	2.50	7.50								
P-SGN4-10	NORTHWEST	IL ROUTE 47	172+65.00	5.50' LT	R4-7	KEEP RIGHT (FACING NORTHWEST)	2.00	2.50	5.00					14.00	1		
					OM1-3	OBJECT MARKER TYPE 1 (YELLOW)	1.50	1.50				1					
P-SGN4-11	NORTHWEST	IL ROUTE 47	174+17.00	3.00' RT	R4-7	KEEP RIGHT (FACING NORTHWEST)	2.00	2.50	5.00					14.00	1		
					OM1-3	OBJECT MARKER TYPE 1 (YELLOW)	1.50	1.50				1					
P-SGN4-12	SOUTHEAST	IL ROUTE 47	175+02.00	6.00' RT	R4-7	KEEP RIGHT (FACING SOUTHEAST)	2.00	2.50	5.00								
					OM1-3	OBJECT MARKER TYPE 1 (YELLOW)	1.50	1.50				1		14.00	1		
P-SGN4-13	NORTHWEST	IL ROUTE 47	175+02.00	6.00' RT	R3-8	OPTIONAL MOVEMENT LANE CONTROL/U-TURN	2.50	3.00	7.50								
P-SGN4-14	NORTHEAST	IL ROUTE 47	177+60.95	6.00' LT	R6-2R	ONE WAY	2.50	3.00	7.50					13.00	1		
P-SGN4-15	SOUTHEAST	IL ROUTE 47	177+75.00	5.86' LT	R3-5L	LEFT TURN ONLY	3.00	2.50	7.50								
P-SGN4-16	NORTHWEST	IL ROUTE 47	177+75.00	5.86' LT	R4-7	KEEP RIGHT (FACING NORTHWEST)	2.00	2.50	5.00					14.00	1		
					OM1-3	OBJECT MARKER TYPE 1 (YELLOW)	1.50	1.50				1					
P-SGN4-17	WEST	SOUTH STREET	167+40.13	79.00' LT	M1-I100	ILLINOIS STATE ROUTE 47	3.00	3.00	9.00					16.25			
					M6-4	DIRECTIONAL ARROW AUXILIARY	1.75	1.25	2.19								
P-SGN4-18	SOUTHEAST	IL ROUTE 47	178+95.00	5.50' RT	R3-5L	LEFT TURN ONLY	3.00	2.50	7.50								
P-SGN4-19	NORTHWEST	IL ROUTE 47	178+95.00	5.50' RT	R4-7	KEEP RIGHT (FACING NORTHEAST)	2.00	2.50	5.00					14.00	1		
					OM1-3	OBJECT MARKER TYPE 1 (YELLOW)	1.50	1.50				1					
P-SGN4-20	NORTHEAST	IL ROUTE 47	179+74.30	5.45' RT	R6-2R	ONE WAY	2.50	3.00	7.50					13.00	1		
P-SGN4-21	NORTHEAST	IL ROUTE 47	180+90.00	2.00' RT	R6-2R	ONE WAY	2.50	3.00	7.50					13.00	2		
P-SGN4-22	SB	IL ROUTE 47	181+15.00		NB-03-0H	NB IL-47, ROUNDABOUT NB IRVING AVE, WEST JUDD ST	17.50	8.50			148.75	SEE OVERHEAD SIGN STRUCTURE DETAILS FOR SIGN SUPPORTS AND QUANTITIES					
P-SGN4-23	SOUTHWEST	IL ROUTE 47	180+52.75	2.00' LT	R6-2R	ONE WAY	2.50	3.00	7.50					13.00	1		
P-SGN4-24	NORTHEAST	IL ROUTE 47	180+70.00	0.00'	R3-8	OPTIONAL MOVEMENT LANE CONTROL/U-TURN	3.00	3.00	9.00					13.00	1		
P-SGN4-25	SOUTHWEST	IRVING AVE	180+30.78	49.35' LT	R1-1	STOP	3.00	3.00	9.00					15.00			
P-SGN4-26	SB	IL ROUTE 47	186+15.00		SB-03-0H	SB IL-47, ROUNDABOUT NB IRVING AVE, WEST JUDD ST	17.50	8.50			148.75	SEE OVERHEAD SIGN STRUCTURE DETAILS FOR SIGN SUPPORTS AND QUANTITIES					
P-SGN4-27	SOUTHWEST	IL ROUTE 47	186+91.15	29.67' RT	R6-2R	ONE WAY	2.50	3.00	7.50					13	1		
P-SGN4-28	NORTHEAST	IL ROUTE 47	187+23.27	27.93' RT	R6-2R	ONE WAY	2.50	3.00	7.50					13	1		
P-SGN4-29	NORTHWEST	IL ROUTE 47	188+40.99	24.13' LT	R3-8	OPTIONAL MOVEMENT LANE CONTROL/U-TURN	3.00	3.00	9.00					15.00			
P-SGN4-30	NORTHWEST	IL ROUTE 47	189+92.00	8.00' RT	R3-5L	LEFT TURN ONLY	3.00	2.50	7.50								
P-SGN4-31	SOUTHEAST	IL ROUTE 47	189+92.00	8.00' RT	R4-7	KEEP RIGHT (FACING SOUTHEAST)	2.00	2.50	5.00					14.00	1		
					OM1-3	OBJECT MARKER TYPE 1 (YELLOW)	1.50	1.50				1					
P-SGN4-32	NORTHEAST	IL ROUTE 47	184+85.00	78.00' RT	R2-1	SPEED LIMIT 35	2.50	3.00	7.50					15.00			
P-SGN4-33	NORTHEAST	IL ROUTE 47	168+65.00	37.00' RT	R2-1	SPEED LIMIT 35	2.50	3.00	7.50					15.00			
P-SGN4-35	WEST	CALHOUN ST	172+60.01	64.86' LT	R1-1	STOP	3.00	3.00	9.00					17.50			
					R3-5L	LEFT TURN ONLY	3.00	2.50	7.50								
P-SGN4-36	NORTHWEST	IL ROUTE 47	165+40.00	48.00' LT	R1-1	STOP	3.00	3.00	9.00					15.00			
P-SGN4-37	SOUTH	IL ROUTE 47	168+32.00	72.00' LT	D3-1	STREET NAME: EASTWOOD DR	4.25	1.00	4.25					14.00			
					D3-1	STREET NAME: SOUTH ST	3.00	1.00	3.00								
P-SGN4-38	SLUTH	IL ROUTE 47	166+10.00	48.00' RT	D3-1	STREET NAME: EASTWOOD DR	4.25	1.00	4.25					14.00			
					D3-1	STREET NAME: COUNTRY CLUB RD	6.00	1.00	6.00								
P-SGN4-39	WEST	CALHOUN ST	172+88.02	56.67' LT	D3-1	STREET NAME: CALHOUN ST	4.00	1.00	4.00					16.00	1		
					R4-7	KEEP RIGHT (FACING WEST)	2.00	2.50	5.00								
					OM1-3	OBJECT MARKER TYPE 1 (YELLOW)	1.50	1.50				1					

NOTE:
FOR PROPOSED SIGN SCHEDULE TOTAL, SEE SHEET 686H

AECOM
303 EAST WACKER DRIVE, SUITE 1400
CHICAGO, IL 60601-5276
PHONE: (312) 373-7700 FAX: (312) 373-6800

USER NAME = PIMSARNO	DESIGNED - OPS	REVISED -
	DRAWN - OPS	REVISED -
PLOT SCALE = 100.0000 ' / in.	CHECKED - TJW	REVISED -
PLOT DATE = 02/10/25	DATE - 02/06/2025	REVISED -

STATE OF ILLINOIS
DEPARTMENT OF TRANSPORTATION

PROPOSED SIGN SCHEDULE

SCALE: NONE | SHEET 5 OF 14 SHEETS | STA. | TO STA.

F.A.P. RTE.	SECTION	COUNTY	TOTAL SHEETS	SHEET NO.
326	2024-1052-N,C,SW,FL	MCHENRY	941	685
		CONTRACT NO. 62X94		
		ILLINOIS	FED. AID PROJECT	

MODEL: Default
FILE NAME: pw:\\aecom-na-pw.bentley.com:AECOM DS21 NA 2020\Documents\60632011-IL-47900-CAD910 CAD\03 SHEETS\CivilD160X17-sht-dgn-schedule-07.dgn

PROPOSED SIGN SCHEDULE:

SIGN NO.	SIGN FACING DIRECTION	ROADWAY	STATION	OFFSET	CODE	LEGEND/DESCRIPTION	PROPOSED DIMENSIONS		SIGN PANEL - TYPE 1	SIGN PANEL - TYPE 2	SIGN PANEL - TYPE 3	OBJECT MARKER - TYPE 1	OBJECT MARKER - TYPE 3	TELESCOPING STEEL SIGN SUPPORT	BASE FOR TELESCOPING STEEL SIGN SUPPORT	METAL POST - TYPE A	METAL POST - TYPE B
							WIDTH (FT)	HEIGHT (FT)	(SQ FT)	(SQ FT)	(SQ FT)	(EACH)	(EACH)	(FT)	(EACH)	(FT)	(FT)
P-SGN4-40	NORTHWEST	IRVING AVE	180+93.00	50.00' LT	D3-1	STREET NAME: IRVING AV	3.00	1.00	3.00								
					D3-1	STREET NAME: EASTWOOD DR	4.25	1.00	4.25					14.00			
P-SGN4-41	NORTHEAST	IL ROUTE 47	178+95.00	37.34' RT	W2-6	ROUNDABOUT AHEAD	3.00	3.00	9.00								
					W13-1	ADVISORY SPEED: 15 M.P.H.	1.50	1.50	2.25					16.50			
P-SGN4-42	NORTHWEST	IL ROUTE 47	189+40.61	26.64' LT	CUSTOM	ROUNDABOUT AHEAD	3.00	3.00	9.00								
					W13-1	ADVISORY SPEED: 15 M.P.H.	1.50	1.50	2.25					16.50			
P-SGN4-43	NORTH	IL ROUTE 47	165+55.00	57.00' RT	W11-15	BICYCLE AND PEDESTRIAN TRAFFIC	3.00	3.00	9.00								
					W11-15P	TRAIL CROSSING	1.50	1.50	2.25					17.50			
					W16-9P	AHEAD PLAQUE	2.00	1.00	2.00								
P-SGN4-44	NORTHEAST	IL ROUTE 47	166+24.94	84.89' RT	W11-15	BICYCLE AND PEDESTRIAN TRAFFIC	3.00	3.00	9.00								
					W16-7P	LEFT DIAGONAL ARROW PLAQUE	2.00	1.00	2.00					16.00			
P-SGN4-45	NORTHWEST	IL ROUTE 47	168+14.00	46.00' RT	W11-15	BICYCLE AND PEDESTRIAN TRAFFIC	3.00	3.00	9.00								
					W11-15P	TRAIL CROSSING	1.50	1.50	2.25					17.50			
					W16-9P	AHEAD PLAQUE	2.00	1.00	2.00								
P-SGN4-46	NORTHWEST	IL ROUTE 47	167+17.26	67.37' RT	W11-15	BICYCLE AND PEDESTRIAN TRAFFIC	3.00	3.00	9.00								
					W16-7P	LEFT DIAGONAL ARROW PLAQUE	2.00	1.00	2.00					16.00			
P-SGN4-47	SOUTHEAST	IL ROUTE 47	173+15.00	52.00' RT	W11-15	BICYCLE AND PEDESTRIAN TRAFFIC	3.00	3.00	9.00								
					W11-15P	TRAIL CROSSING	1.50	1.50	2.25					17.50			
					W16-9P	AHEAD PLAQUE	2.00	1.00	2.00								
P-SGN4-48	SOUTHEAST	IL ROUTE 47	174+14.00	53.50' RT	W11-15	BICYCLE AND PEDESTRIAN TRAFFIC	3.00	3.00	9.00								
					W16-7P	LEFT DIAGONAL ARROW PLAQUE	2.00	1.00	2.00					16.00			
P-SGN4-49	NORTHWEST	IL ROUTE 47	176+28.00	37.50' RT	W11-15	BICYCLE AND PEDESTRIAN TRAFFIC	3.00	3.00	9.00								
					W11-15P	TRAIL CROSSING	1.50	1.50	2.25					17.50			
					W16-9P	AHEAD PLAQUE	2.00	1.00	2.00								
P-SGN4-50	NORTHWEST	IL ROUTE 47	175+28.00	37.50' RT	W11-15	BICYCLE AND PEDESTRIAN TRAFFIC	3.00	3.00	9.00								
					W16-7P	LEFT DIAGONAL ARROW PLAQUE	2.00	1.00	2.00								
P-SGN4-51	SOUTH	IL ROUTE 47	182+43.23	62.56' RT	W11-15	BICYCLE AND PEDESTRIAN TRAFFIC	3.00	3.00	9.00								
					W11-15P	TRAIL CROSSING	1.50	1.50	2.25					17.50			
					W16-9P	AHEAD PLAQUE	2.00	1.00	2.00								
P-SGN4-52	SOUTH	IL ROUTE 47	183+01.00	145.50' RT	W11-15	BICYCLE AND PEDESTRIAN TRAFFIC	3.00	3.00	9.00								
					W16-7P	LEFT DIAGONAL ARROW PLAQUE	2.00	1.00	2.00					16.00			
P-SGN4-53	SOUTHEAST	IL ROUTE 47	184+10.00	133.00' RT	W11-15	BICYCLE AND PEDESTRIAN TRAFFIC	3.00	3.00	9.00								
					W11-15P	TRAIL CROSSING	1.50	1.50	2.25					17.50			
					W16-9P	AHEAD PLAQUE	2.00	1.00	2.00								
P-SGN4-54	SOUTHEAST	IL ROUTE 47	184+60.00	96.50' RT	W11-15	BICYCLE AND PEDESTRIAN TRAFFIC	3.00	3.00	9.00								
					W16-7P	LEFT DIAGONAL ARROW PLAQUE	2.00	1.00	2.00					16.00			
P-SGN4-55	SOUTHWEST	IL ROUTE 47	184+85.09	78.04' RT	W11-15	BICYCLE AND PEDESTRIAN TRAFFIC	3.00	3.00	9.00								
					W11-15P	TRAIL CROSSING	1.50	1.50	2.25					17.50			
					W16-9P	AHEAD PLAQUE	2.00	1.00	2.00								
P-SGN4-56	NORTHWEST	IL ROUTE 47	183+95.03	123.03' RT	W11-15	BICYCLE AND PEDESTRIAN TRAFFIC	3.00	3.00	9.00								
					W16-7P	LEFT DIAGONAL ARROW PLAQUE	2.00	1.00	2.00					16.00			
P-SGN4-57	NORTHWEST	IL-47	181+05.00	48.00' LT	CUSTOM	CITY OF WOODSTOCK, ADOPT A HIGHWAY	3.50	2.00	7.00								
					CUSTOM	KEEP WOODSTOCK CLEAN	3.50	3.50	12.25					17.50			
P-SGN4-58	SOUTH	IRVING AVE	202+93.00 (EX BL IRVING AVE)	17.50' RT	CUSTOM	CITY OF WOODSTOCK, ADOPT A HIGHWAY	3.50	2.00	7.00								
					CUSTOM	ODDFELLOWS, GUARDAIN LODGE 60	4.00	1.50	6.00					17.50			
					CUSTOM	CITY OF WOODSTOCK, ADOPT A HIGHWAY	3.50	2.00	7.00								
P-SGN4-59	SOUTHEAST	IL ROUTE 47	171+37.25	37.86' RT	CUSTOM	WOODSTOCK OPERA HOUSE WITH LEFT ARROW	5.00	3.50		17.50				15.50			

NOTE:
FOR PROPOSED SIGN SCHEDULE TOTAL, SEE SHEET 686H

AECOM
303 EAST WACKER DRIVE, SUITE 1400
CHICAGO, IL 60601-5276
PHONE: (312) 373-7700 FAX: (312) 373-6800

USER NAME = PIMSARNO	DESIGNED - OPS	REVISED -	
	DRAWN - OPS	REVISED -	
PLOT SCALE = 100.0000 ' / in.	CHECKED - TJW	REVISED -	
PLOT DATE = 02/10/25	DATE - 02/06/2025	REVISED -	

STATE OF ILLINOIS
DEPARTMENT OF TRANSPORTATION

PROPOSED SIGN SCHEDULE

SCALE: NONE | SHEET 6 OF 14 SHEETS | STA. | TO STA.

F.A.P. RTE.	SECTION	COUNTY	TOTAL SHEETS	SHEET NO.
326	2024-1052-N,C,SW,FL	MCHENRY	941	686
		CONTRACT NO. 62X94		
		ILLINOIS	FED. AID PROJECT	

MODEL: Default
FILE NAME: pw:\\aecom-na-pw.bentley.com:AECOM_DS21_NA_2020\Documents\60632011-IL-47-900-CAD-910_CAD\03_SHEETS\CivilD160X17-sht-sign-schedule-07.dgn

PROPOSED SIGN SCHEDULE:

SIGN NO.	SIGN FACING DIRECTION	ROADWAY	STATION	OFFSET	CODE	LEGEND/DESCRIPTION	PROPOSED DIMENSIONS		SIGN PANEL - TYPE 1	SIGN PANEL - TYPE 2	SIGN PANEL - TYPE 3	OBJECT MARKER - TYPE 1	OBJECT MARKER - TYPE 3	TELESCOPING STEEL SIGN SUPPORT	BASE FOR TELESCOPING STEEL SIGN SUPPORT	METAL POST - TYPE A	METAL POST - TYPE B
							WIDTH (FT)	HEIGHT (FT)	(SQ FT)	(SQ FT)	(SQ FT)	(EACH)	(EACH)	(FT)	(EACH)	(FT)	(FT)
P-SGN4-60	NORTHWEST	IL ROUTE 47	174+36.00	37.50' LT	CUSTOM	WOODSTOCK OPERA HOUSE WITH RIGHT ARROW	5.00	3.50		17.50				15.50			
P-SGN4-61	SOUTHEAST	IL ROUTE 47	169+65.00	37.50' RT	CUSTOM	CITY OF WOODSTOCK, ADOPT A HIGHWAY	3.50	2.00	7.00					17.50			
					CUSTOM	PIONEER CENTER	3.50	1.50	5.25								
					CUSTOM	CITY OF WOODSTOCK, ADOPT A HIGHWAY	3.50	2.00	7.00								
P-SGN4-62	NORTHWEST	IL ROUTE 47	177+90.00	37.00' LT	R2-1	SPEED LIMIT 35	2.50	3.00	7.50					15.00			
P-SGN5-01	NORTHWEST	IL ROUTE 47	190+78.50	34.50' LT	W11-10	TRUCK	3.00	3.00	9.00					15.00			
P-SGN5-02	SOUTHEAST	IL ROUTE 47	190+85.00	35.00' LT	OM3-R	OBJECT MARKER TYPE 3	1.00	3.00					1	15.00			
P-SGN5-03	SOUTHEAST	IL ROUTE 47	191+12.00	3.00' RT	R4-7	KEEP RIGHT (FACING SOUTHEAST)	2.00	2.50	5.00					14.00	1		
					OM1-3	OBJECT MARKER TYPE 1 (YELLOW)	1.50	1.50				1					
P-SGN5-04	EAST	IL ROUTE 47	193+45.00	0.00'	R6-2R	ONE WAY	2.50	3.00	7.50					13.00	1		
P-SGN5-05	SOUTHEAST	IL ROUTE 47	194+33.50	35.50' RT	M2-1	JUNCTION	1.75	1.25	2.19					17.25	1		
					M1-I100	ILLINOIS STATE ROUTE 120	3.75	3.00		11.25							
					D3-1	MCHENRY AVE	4.33	1.00	4.33								
P-SGN5-06	NORTHWEST	IL ROUTE 47	194+55.00	42.50' LT	OM3-R	OBJECT MARKER TYPE 3	1.00	3.00					1	15.00			
P-SGN5-07	WEST	EASTWOOD COURT	195+86.91	43.38' LT	R1-1	STOP	3.00	3.00	9.00					15.00			
P-SGN5-08	SOUTHWEST	IL ROUTE 47	195+92.00	0.00'	R6-2R	ONE WAY	2.50	3.00	7.50					13.00	1		
P-SGN5-09	SOUTHEAST	IL ROUTE 47	196+42.50	36.00' RT	S1-1	SCHOOL CROSSING	3.00	3.00	9.00					16.00			
					W16-9P	AHEAD	2.00	1.00	2.00								
P-SGN5-10	SOUTHWEST	IL ROUTE 47	196+12.50	43.10' LT	D3-1	STREET NAME: EASTWOOD DR	4.25	1.00	4.25					14.00			
					D3-1	STREET NAME: EASTWOOD CT	4.25	1.00	4.25								
P-SGN5-11	WEST	IL ROUTE 47	197+58.00	60.00' RT	W14-1	DEAD END	3.00	3.00	9.00					15.00			
P-SGN5-12	NORTHEAST	CENTER STREET	198+09.64	54.09' RT	R1-1	STOP	3.00	3.00	9.00					15.00			
P-SGN5-13	NORTHEAST	IL ROUTE 47	198+00.00	5.50' LT	R6-2R	ONE WAY	2.50	3.00	7.50					13.00	1		
P-SGN5-14	NORTHEAST	IL ROUTE 47	199+20.00	35.00' LT	R2-1	SPEED LIMIT 35	2.50	3.00	7.50					15.00			
P-SGN5-15	NORTHWEST	IL ROUTE 47	199+66.00	40.00' LT	M3-3	SOUTH	2.00	1.00	2.00					16.00			
					M1-I100	ILLINOIS STATE ROUTE 47	3.00	3.00	9.00								
P-SGN5-16	NORTHWEST	IL ROUTE 120	200+10.62	104.44' LT	D3-1	STREET NAME: MCHENRY AVE	5.00	1.00	5.00					14.00			
					D3-2	STREET NAME: N SEMINARY AVE	5.00	1.00	5.00								
P-SGN5-17	WEST	IL ROUTE 47	200+18.58	86.52' LT	M1-I100	ILLINOIS STATE ROUTE 47	3.00	3.00	9.00					20.50			
					M6-4	DIRECTIONAL ARROW AUXILIARY	1.75	1.25	2.19								
					M1-I100	ILLINOIS STATE ROUTE 120	3.75	3.00		11.25							
					M6-3	DIRECTIONAL ARROW AUXILIARY	1.75	1.25	2.19								
P-SGN5-18	WEST	IL ROUTE 120	200+17.89	72.45' LT	R10-11a	NO TURN ON RED	2.00	2.50	5.00					15.50			
					S4-I103	ON SCHOOL DAYS WHEN CHILDREN ARE PRESENT	2.00	1.00	2.00								
P-SGN5-19	SOUTHEAST	IL ROUTE 47	199+30.00	36.00' RT	M1-I100	ILLINOIS STATE ROUTE 47	3.00	3.00	9.00					20.50			
					M6-2	DIRECTIONAL ARROW AUXILIARY	1.75	1.25	2.19								
					M1-I100	ILLINOIS STATE ROUTE 120	3.75	3.00		11.25							
					M6-4	DIRECTIONAL ARROW AUXILIARY	1.75	1.25	2.19								
P-SGN5-20	SOUTHEAST	IL ROUTE 120	200+37.50	41.00' RT	R10-11a	NO TURN ON RED	2.00	2.50	5.00					15.50			
					S4-I103	ON SCHOOL DAYS WHEN CHILDREN ARE PRESENT	2.00	1.00	2.00								
P-SGN5-21	NORTHWEST	IL ROUTE 120	201+27.00	42.00' LT	R10-11a	NO TURN ON RED	2.00	2.50	5.00					15.50			
					S4-I103	ON SCHOOL DAYS WHEN CHILDREN ARE PRESENT	2.00	1.00	2.00								
P-SGN5-22	NORTHWEST	IL ROUTE 47	201+59.16	40.71' LT	M1-I100	ILLINOIS STATE ROUTE 47	3.00	3.00	9.00					20.50			
					M6-2	DIRECTIONAL ARROW AUXILIARY	1.75	1.25	2.19								
					M1-I100	ILLINOIS STATE ROUTE 120	3.75	3.00		11.25							
					M6-4	DIRECTIONAL ARROW AUXILIARY	1.75	1.25	2.19								

NOTE:
FOR PROPOSED SIGN SCHEDULE TOTAL, SEE SHEET 686H

AECOM
303 EAST WACKER DRIVE, SUITE 1400
CHICAGO, IL 60601-5276
PHONE: (312) 373-7700 FAX: (312) 373-6800

USER NAME = PIMSARNO	DESIGNED - OPS	REVISED -
	DRAWN - OPS	REVISED -
PLOT SCALE = 100.0000 ' / in.	CHECKED - TJW	REVISED -
PLOT DATE = 02/10/25	DATE - 02/06/2025	REVISED -

STATE OF ILLINOIS
DEPARTMENT OF TRANSPORTATION

PROPOSED SIGN SCHEDULE

SCALE: NONE | SHEET 7 OF 14 SHEETS | STA. | TO STA.

F.A.P. RTE.	SECTION	COUNTY	TOTAL SHEETS	SHEET NO.
326	2024-1052-N,C,SW,FL	MCHENRY	941	686A
		CONTRACT NO. 62X94		
	ILLINOIS FED. AID PROJECT			

MODEL: Default
FILE NAME: pw:\\aecom-na-pw.bentley.com:AECOM DS21_NA 2020\Documents\60632011-tl-417900-CAD910_CAD\03 SHEETS\Civil\D160X17-sht-sign-schedule-07.dgn

PROPOSED SIGN SCHEDULE:

SIGN NO.	SIGN FACING DIRECTION	ROADWAY	STATION	OFFSET	CODE	LEGEND/DESCRIPTION	PROPOSED DIMENSIONS		SIGN PANEL - TYPE 1	SIGN PANEL - TYPE 2	SIGN PANEL - TYPE 3	OBJECT MARKER - TYPE 1	OBJECT MARKER - TYPE 3	TELESCOPING STEEL SIGN SUPPORT	BASE FOR TELESCOPING STEEL SIGN SUPPORT	METAL POST - TYPE A	METAL POST - TYPE B
							WIDTH (FT)	HEIGHT (FT)	(SQ FT)	(SQ FT)	(SQ FT)	(EACH)	(EACH)	(FT)	(EACH)	(FT)	(FT)
P-SGN5-23	NORTHEAST	IL ROUTE 120	201+56.00	76.00' RT	R10-11a	NO TURN ON RED	2.00	2.50	5.00					15.50			
					S4-I103	ON SCHOOL DAYS WHEN CHILDREN ARE PRESENT	2.00	1.00	2.00								
P-SGN5-24	SOUTH	IL ROUTE 47	202+25.00	35.50' RT	W4-2R	LANE ENDS (RIGHT)	3.00	3.00	9.00					15.00			
P-SGN5-25	SOUTH	IL ROUTE 47	203+30.00	35.50' RT	M3-1	NORTH	2.00	1.00	2.00					19.00			
					M1-I100	ILLINOIS STATE ROUTE 47	3.00	3.00	9.00								
					R2-1	SPEED LIMIT 30	2.50	3.00	7.50								
P-SGN5-26	NORTH	IL ROUTE 47	205+27.00	33.50' RT	CUSTOM	WATER SUPPLY PROTECTION AREA	4.00	3.00		12.00				16.00			
					CUSTOM	REPORT SPILLS	4.00	1.00	4.00								
P-SGN5-27	SOUTH	IL ROUTE 47	207+10.50	34.50' LT	CUSTOM	LEAVING	4.00	1.00	4.00	4.00				16.00			
					CUSTOM	WATER SUPPLY PROTECTION AREA	4.00	3.00		12.00							
P-SGN5-28	NORTH	IL ROUTE 47	207+75.00	33.00' LT	M2-1	JUNCTION	1.75	1.25	2.19					17.25			
					M1-I100	ILLINOIS ROUTE 120	3.75	3.00		11.25							
					D3-1	STREET NAME: MCHENRY AVE	4.33	1.00	4.33								
P-SGN5-29	EAST	CENTER ST	198+32.00	36.00' RT	D3-1	STREET NAME: CENTER LN	3.50	1.00	3.50					14.00			
					D3-1	STREET NAME: EASTWOOD DR	4.25	1.00	4.25								
P-SGN5-30	EAST	CENTER ST	197+93.00	102.00' RT	D3-1	STREET NAME: CENTER LN	3.50	1.00	3.50					14.00			
					D3-1	STREET NAME: CENTER ST	3.50	1.00	3.50								
P-SGN5-31	NORTHWEST	IL ROUTE 47	201+80.00	50.00' RT	M1-I100	ILLINOIS STATE ROUTE 47	3.00	3.00	9.00					20.50			
					M6-4	DIRECTIONAL ARROW AUXILIARY	1.75	1.25	2.19	2.19							
					M1-I100	ILLINOIS STATE ROUTE 120	3.75	3.00		11.25							
					M6-3	DIRECTIONAL ARROW AUXILIARY	1.75	1.25	2.19								
P-SGN5-32	SOUTHEAST	IL ROUTE 47	200+20.00	6.50' LT	R3-8	OPTIONAL MOVEMENT LANE CONTROL/U-TURN	2.50	3.00	7.50					14.00	1		
P-SGN5-33	NORTHEAST	IL ROUTE 47	200+20.00	6.50' LT	R4-7	KEEP RIGHT (FACING NORTHEAST)	2.00	2.50	5.00								
					OM1-3	OBJECT MARKER TYPE 1 (YELLOW)	1.50	1.50				1					
P-SGN5-34	SOUTHEAST	IL ROUTE 47	201+51.00	6.60' RT	R4-7	KEEP RIGHT (FACING SOUTHEAST)	2.00	2.50	5.00					14.00	1		
					OM1-3	OBJECT MARKER TYPE 1 (YELLOW)	1.50	1.50				1					
P-SGN5-35	NORTHWEST	IL ROUTE 47	201+51.00	6.60' RT	R3-5R	RIGHT TURN ONLY	2.50	3.00	7.50								
P-SGN5-36	NORTH	IL ROUTE 47	202+95.00	6.60' RT	R4-7	KEEP RIGHT (FACING SOUTHEAST)	2.00	2.50	5.00					16.00	1		
					OM1-3	OBJECT MARKER TYPE 1 (YELLOW)	1.50	1.50				1					
P-SGN5-37	SOUTHEAST	IL ROUTE 47	196+53.11	49.90' RT	W11-15	BICYCLE AND PEDESTRIAN TRAFFIC	3.00	3.00	9.00					17.50			
					W11-15P	TRAIL CROSSING	1.50	1.50	2.25								
					W16-9P	AHEAD PLAQUE	2.00	1.00	2.00								
P-SGN5-38	SOUTHEAST	IL ROUTE 47	197+55.00	50.00' RT	W11-15	BICYCLE AND PEDESTRIAN TRAFFIC	3.00	3.00	9.00					16.00			
					W16-7P	LEFT DIAGONAL ARROW PLAQUE	2.00	1.00	2.00								
P-SGN5-39	NORTHWEST	IL ROUTE 47	199+42.83	35.62' RT	W11-15	BICYCLE AND PEDESTRIAN TRAFFIC	3.00	3.00	9.00					17.50			
					W11-15P	TRAIL CROSSING	1.50	1.50	2.25								
					W16-9P	AHEAD PLAQUE	2.00	1.00	2.00								
P-SGN5-40	NORTHWEST	IL ROUTE 47	198+37.57	36.57' RT	W11-15	BICYCLE AND PEDESTRIAN TRAFFIC	3.00	3.00	9.00					16.00			
					W16-7P	LEFT DIAGONAL ARROW PLAQUE	2.00	1.00	2.00								
P-SGN5-41	SOUTHEAST	IL ROUTE 47	199+75.00	35.50' RT	W11-15	BICYCLE AND PEDESTRIAN TRAFFIC	3.00	3.00	9.00					17.50			
					W11-15P	TRAIL CROSSING	1.50	1.50	2.25								
					W16-9P	AHEAD PLAQUE	2.00	1.00	2.00								
P-SGN5-42	SOUTHEAST	IL ROUTE 47	200+78.50	72.00' RT	W11-15	BICYCLE AND PEDESTRIAN TRAFFIC	3.00	3.00	9.00					16.00			
					W16-7P	LEFT DIAGONAL ARROW PLAQUE	2.00	1.00	2.00								
P-SGN5-43	NORTH	IL ROUTE 47	202+83.50	35.50' RT	W11-15	BICYCLE AND PEDESTRIAN TRAFFIC	3.00	3.00	9.00					17.50			
					W11-15P	TRAIL CROSSING	1.50	1.50	2.25								
					W16-9P	AHEAD PLAQUE	2.00	1.00	2.00								

NOTE:
FOR PROPOSED SIGN SCHEDULE TOTAL, SEE SHEET 686H

AECOM
303 EAST WACKER DRIVE, SUITE 1400
CHICAGO, IL 60601-5276
PHONE: (312) 373-7700 FAX: (312) 373-6800

USER NAME = PIMSARNO	DESIGNED - OPS	REVISED -
	DRAWN - OPS	REVISED -
PLOT SCALE = 100.0000 ' / in.	CHECKED - TJW	REVISED -
PLOT DATE = 02/10/25	DATE - 02/06/2025	REVISED -

STATE OF ILLINOIS
DEPARTMENT OF TRANSPORTATION

PROPOSED SIGN SCHEDULE

SCALE: NONE | SHEET 8 OF 14 SHEETS | STA. | TO STA.

F.A.P. RTE.	SECTION	COUNTY	TOTAL SHEETS	SHEET NO.
326	2024-1052-N,C,SW,FL	MCHENRY	941	686B
		CONTRACT NO. 62X94		
	ILLINOIS FED. AID PROJECT			

MODEL: Default
FILE NAME: pw:\\aecom-na-pw.bentley.com:AECOM DS21_NA 2020\Documents\60632011-IL-417900-CAD910 CAD\03 SHEETS\Civil\D160X17-sht-sign-schedule-07.dgn

PROPOSED SIGN SCHEDULE:

SIGN NO.	SIGN FACING DIRECTION	ROADWAY	STATION	OFFSET	CODE	LEGEND/DESCRIPTION	PROPOSED DIMENSIONS		SIGN PANEL - TYPE 1	SIGN PANEL - TYPE 2	SIGN PANEL - TYPE 3	OBJECT MARKER - TYPE 1	OBJECT MARKER - TYPE 3	TELESCOPING STEEL SIGN SUPPORT	BASE FOR TELESCOPING STEEL SIGN SUPPORT	METAL POST - TYPE A	METAL POST - TYPE B
							WIDTH (FT)	HEIGHT (FT)	(SQ FT)	(SQ FT)	(SQ FT)	(EACH)	(EACH)	(FT)	(EACH)	(FT)	(FT)
P-SGN5-44	NORTHWEST	IL ROUTE 47	201+78.50	53.50' RT	W11-15	BICYCLE AND PEDESTRIAN TRAFFIC	3.00	3.00	9.00					16.00			
					W16-7P	LEFT DIAGONAL ARROW PLAQUE	2.00	1.00	2.00								
P-SGN5-45	SOUTH	IL-47	206+75.00	26.75' RT	CUSTOM	CITY OF WOODSTOCK, ADOPT A HIGHWAY	3.50	2.00	7.00					17.50			
					CUSTOM	KEEP WOODSTOCK CLEAN	3.50	3.50		12.25							
P-SGN5-46	NORTHWEST	IL ROUTE 120	201+36.00	62.50' LT	D3-1	STREET NAME: North St	3.00	1.00	3.00					14.00			
					D3-2	STREET NAME: N SEMINARY AVE	5.00	1.00	5.00								
P-SGN8-01	NORTHWEST	LAKE AVE	169+49.47 (EX BL LAKE AVE)	24.91' RT	W2-6	ROUNDABOUT AHEAD	3.00	3.00	9.00					16.50			
					W13-1	ADVISORY SPEED: 15 M.P.H.	1.50	1.50	2.25								
P-SGN8-02	SOUTHEAST	LAKE AVE	170+72.00 (EX BL LAKE AVE)	14.50' LT	R7-1	NO PARKING ANY TIME	1.00	1.50	1.50					13.50			
P-SGN8-03	SOUTHEAST	LAKE AVE	173+93.00 (EX BL LAKE AVE)	7.00' LT	R7-1	NO PARKING ANY TIME	1.00	1.50	1.50					13.50			
P-SGN8-04	NORTHWEST	LAKE AVE	174+74.65 (EX BL LAKE AVE)	43.45' RT	R4-7	KEEP RIGHT (FACING NORTHWEST)	2.00	2.50	1.50					14.00	1		
					OM1-3	OBJECT MARKER TYPE 1 (YELLOW)	1.50	1.50				1					
P-SGN8-05	SOUTHEAST	LAKE AVE	175+72.00 (EX BL LAKE AVE)	4.00' LT	CUSTOM	CITY OF WOODSTOCK, ADOPT A HIGHWAY	3.50	2.00	7.00					16.00			
					CUSTOM	KEEP WOODSTOCK CLEAN	3.50	2.00	7.00								
P-SGN9-01	SOUTH EAST	LAKE AVE	180+42.68 (EX BL LAKE AVE)	16.48' LT	R4-7	KEEP RIGHT (FACING SOUTHEAST)	2.00	2.50	1.50					16.00	1		
					OM1-3	OBJECT MARKER TYPE 1 (YELLOW)	1.50	1.50				1					
P-SGN9-02	EAST	LAKE AVE	181+28.89 (EX BL LAKE AVE)	57.68' LT	D3-1	STREET NAME: MARTHA LN	3.50	1.00	1.50					17.00			
					D3-1	STREET NAME : LAKE AVE	3.00	1.00	1.50								
					R1-1	STOP	3.00	3.00	9.00								
P-SGN9-03	SOUTHEAST	LAKE AVE	181+84.72 (EX BL LAKE AVE)	44.00' LT	R10-7	DO NOT BLOCK INTERSECTION	2.00	2.50	5.00					14.50			
P-SGN9-04	SOUTHEAST	LAKE AVE	184+40.36 (EX BL LAKE AVE)	23.13' LT	W2-6	ROUNDABOUT AHEAD	3.00	3.00	9.00					16.50			
					W13-1	ADVISORY SPEED: 15 M.P.H.	1.50	1.50	2.25								
P-SGN9-05	NORTHWEST	LAKE AVE	181+00.00 (EX BL LAKE AVE)	16.50' RT	CUSTOM	CITY OF WOODSTOCK, ADOPT A HIGHWAY	3.50	2.00	7.00					17.50			
					CUSTOM	STAR TOURING AND RIDING, WODDSTOCK, CHAPTER 193	3.50	1.50	5.25								
					CUSTOM	KEEP WOODSTOCK CLEAN	3.50	2.00	7.00								
P-SGN9-06	WEST	LAKE AVE	181+72.12 (EX BL LAKE AVE)	23.75' RT	R2-1	STOP	3.00	3.00	9.00					15.00			
P-SGN9-07	EAST	MCCONNELL RD	141+81.75 (EX BL MCCONNELL RD)	19.63' LT	R3-5R	RIGHT TURN ONLY	2.50	3.00	7.50					15.00			
P-SGN9-08	EAST	MCCONNELL RD	143+37.90 (EX BL MCCONNELL RD)	18.50' LT	W2-6	ROUNDABOUT AHEAD	3.00	3.00	9.00					16.50			
					W13-1	ADVISORY SPEED: 15 M.P.H.	1.50	1.50	2.25								
P-SGN9-09	WEST	MCCONNELL RD	140+95.00 (EX BL MCCONNELL RD)	28.00' RT	CUSTOM	CITY OF WOODSTOCK, ADOPT A HIGHWAY	3.50	2.00	7.00					19.50			
					CUSTOM	IN MEMORY OF SARAH MCCULLAGH	3.50	1.50	5.25								
					CUSTOM	ONE MILE	3.50	2.00	7.00								
					CUSTOM	KEEP WOODSTOCK CLEAN	3.50	2.00	7.00								
P-SGN9-10	WEST	LAKE AVE	182+50.00 (EX BL MCCONNELL RD)	24.00' RT	R2-1	SPEED LIMIT 40	2.50	3.00	7.50					15.00			
P-SGN10-01	WEST	SOUTH ST	111+26.61	22.48' RT	R7-1	NO PARKING ANY TIME	1.00	1.50	1.50					13.50			
P-SGN10-02	WEST	SOUTH ST	112+13.42	22.48' RT	R7-1	NO PARKING ANY TIME	1.00	1.50	1.50					13.50			
P-SGN10-03	EAST	SOUTH ST	111+46.65	29.81' LT	R7-1	NO PARKING ANY TIME	1.00	1.50	1.50					13.50			
P-SGN10-04	EAST	SOUTH ST	118+10.47	36.48' LT	R3-8b	MANDATORY MOVEMENT LANE CONTROL	4.00	2.50		10.00				14.50			

NOTE:
FOR PROPOSED SIGN SCHEDULE TOTAL, SEE SHEET 686H

AECOM
303 EAST WACKER DRIVE, SUITE 1400
CHICAGO, IL 60601-5276
PHONE: (312) 373-7700 FAX: (312) 373-6800

USER NAME = PIMSARNO	DESIGNED - OPS	REVISED -	
	DRAWN - OPS	REVISED -	
PLOT SCALE = 100.0000 ' / In.	CHECKED - TJW	REVISED -	
PLOT DATE = 02/10/25	DATE - 02/06/2025	REVISED -	

STATE OF ILLINOIS
DEPARTMENT OF TRANSPORTATION

PROPOSED SIGN SCHEDULE

SCALE: NONE | SHEET 9 OF 14 SHEETS | STA. | TO STA.

F.A.P. RTE.	SECTION	COUNTY	TOTAL SHEETS	SHEET NO.
326	2024-1052-N,C,SW,FL	MCHENRY	941	686C
		CONTRACT NO. 62X94		
	ILLINOIS	FED. AID PROJECT		

MODEL: Default
FILE NAME: pw:\\aecom-na-pw.bentley.com:AECOM DS2 - NA 2020\Documents\60632011-IL-47\900-CAD\910 CAD\03 SHEETS\CivilD160X17-sht-sdpn-schedule-07.dgn

PROPOSED SIGN SCHEDULE:

SIGN NO.	SIGN FACING DIRECTION	ROADWAY	STATION	OFFSET	CODE	LEGEND/DESCRIPTION	PROPOSED DIMENSIONS		SIGN PANEL - TYPE 1	SIGN PANEL - TYPE 2	SIGN PANEL - TYPE 3	OBJECT MARKER - TYPE 1	OBJECT MARKER - TYPE 3	TELESCOPING STEEL SIGN SUPPORT	BASE FOR TELESCOPING STEEL SIGN SUPPORT	METAL POST - TYPE A	METAL POST - TYPE B
							WIDTH (FT)	HEIGHT (FT)	(SQ FT)	(SQ FT)	(SQ FT)	(EACH)	(EACH)	(FT)	(EACH)	(FT)	(FT)
P-SGN10-05	WEST	SOUTH ST	116+50.00	30.00' RT	CUSTOM	CITY OF WOODSTOCK, ADOPT A HIGHWAY	3.50	2.00	7.00					17.50			
					CUSTOM	HIGH SCHOOL FBLA	4.00	1.50	6.00								
					CUSTOM	CITY OF WOODSTOCK, ADOPT A HIGHWAY	3.50	2.00	7.00								
P-SGN11-01	WEST	JUDD ST	108+83.61 (EX BL JUDD ST)	19.74' RT	W2-6	ROUNDABOUT AHEAD	3.00	3.00	9.00					16.50			
					W13-1	ADVISORY SPEED: 15 M.P.H.	1.50	1.50	2.25								
P-SGN11-02	WEST	JUDD ST	109+42.89 (EX BL JUDD ST)	6.79' LT	R4-7	KEEP RIGHT (FACING WEST)	2.00	2.50	5.00					14.00	1		
					OM1-3	OBJECT MARKER TYPE 1 (YELLOW)	1.50	1.50				1					
P-SGN11-03	SOUTH	JUDD ST	206+27.33 (EX BL IRVING AV)	17.68' LT	W2-6	ROUNDABOUT AHEAD	3.00	3.00	9.00					16.50			
					W13-1	ADVISORY SPEED: 15 M.P.H.	1.50	1.50	2.25								
P-SGN12-01	NORTHWEST	IL ROUTE 120	64+08.62	21.91' LT	M3-4	WEST	2.00	1.00	2.00					17.25			
					M1-I100	ILLINOIS STATE ROUTE 120	3.75	3.00		11.25							
					M5-1	DIRECTIONAL ARROW AUXILIARY	1.75	1.25	2.19								
P-SGN12-02	NORTHWEST	IL ROUTE 120	65+48.09	22.27' LT	W3-1	STOP AHEAD	3.00	3.00	9.00					16.00			
					D3-1	STREET NAME: MADISON ST	3.50	1.00	3.50								
P-SGN12-03	SOUTHWEST	IL ROUTE 120	69+60.00	22.00' RT	M3-2	EAST	2.00	1.00	2.00					19.00			
					M1-I100	ILLINOIS STATE ROUTE 120	3.75	3.00		11.25							
					R2-1	SPEED LIMIT 30 MPH	2.50	3.00	7.50								
P-SGN13-01	SOUTH	ROUNDABOUT	130+25.81	20.25' LT	R6-1R	ONE WAY (RIGHT)	3.00	1.00	3.00					14.50			
					OM1-3	OBJECT MARKER TYPE 1 (YELLOW)	1.50	1.50				1					
P-SGN13-02	EAST	ROUNDABOUT	130+43.99	8.57' LT	W1-8a	ONE WAY (RIGHT)	3.00	1.00	3.00					14.50			
					OM1-3	OBJECT MARKER TYPE 1 (YELLOW)	1.50	1.50				1					
P-SGN13-03	NORTH	ROUNDABOUT	130+65.42	33.34' LT	W1-8a	ONE WAY (RIGHT)	3.00	1.00	3.00					14.50			
					OM1-3	OBJECT MARKER TYPE 1 (YELLOW)	1.50	1.50				1					
P-SGN13-04	WEST	ROUNDABOUT	130+46.13	50.65' LT	R6-1R	ONE WAY (RIGHT)	3.00	1.00	3.00					14.50			
					OM1-3	OBJECT MARKER TYPE 1 (YELLOW)	1.50	1.50				1					
P-SGN13-05	WEST	IL ROUTE 47	129+63.00	27.50' RT	R1-2	YIELD	3.00	3.00	9.00					13.00	1		
P-SGN13-06	SOUTHWEST	IL ROUTE 47	129+39.00	68.00' LT	R1-2	YIELD	3.00	3.00	9.00					13.00	1		
P-SGN13-07	SOUTH	IL ROUTE 47	130+12.00	50.50' RT	R1-2	YIELD	3.00	3.00	9.00					13.00	1		
P-SGN13-08	SOUTH	IL ROUTE 47	130+68.00	57.00' RT	R1-2	YIELD	3.00	3.00	9.00					13.00	1		
P-SGN13-09	NORTHEAST	IL ROUTE 47	131+33.00	17.50' LT	R1-2	YIELD	3.00	3.00	9.00					13.00	1		
P-SGN13-10	NORTHEAST	IL ROUTE 47	131+37.94	67.92' LT	R1-2	YIELD	3.00	3.00	9.00					13.00	1		
P-SGN13-11	EAST	IL ROUTE 47	131+58.55	96.25' LT	R1-2	YIELD	3.00	3.00	9.00					15.00			
P-SGN13-12	NORTHWEST	LAKE AVE	129+71.00	95.00' LT	R1-2	YIELD	3.00	3.00	9.00					15.00			
P-SGN13-13	NORTHWEST	LAKE AVE	130+12.52	107.76' LT	R1-2	YIELD	3.00	3.00	9.00					13.00	1		
P-SGN13-14	SOUTHEAST	LAKE AVE	130+99.30	61.83' RT	R1-3	YIELD	3.00	3.00	9.00					15.00			
P-SGN13-15	SOUTHEAST	LAKE AVE	130+62.83	99.76' RT	W11-2	PEDESTRIAN	3.00	3.00	9.00					16.25			
					M6-2L	DIRECTIONAL ARROW (LEFT)	1.75	1.25	2.19								
P-SGN13-16	SOUTH	IL ROUTE 47	131+47.50	38.50' RT	W11-2	PEDESTRIAN	3.00	3.00	9.00					16.25			
					M6-2L	DIRECTIONAL ARROW (LEFT)	1.75	1.25	2.19								
P-SGN13-17	NORTHEAST	IL ROUTE 47	131+71.00	33.50' LT	W11-2	PEDESTRIAN	3.00	3.00	9.00					14.25	1		
					M6-2L	DIRECTIONAL ARROW (LEFT)	1.75	1.25	2.19								
P-SGN13-18	NORTHEAST	IL ROUTE 47	131+78.00	75.00' LT	W11-2	PEDESTRIAN	3.00	3.00	9.00					16.25			
					M6-2L	DIRECTIONAL ARROW (LEFT)	1.75	1.25	2.19								
P-SGN13-19	EAST	LAKE AVE	131+52.89	113.98' LT	W11-2	PEDESTRIAN	3.00	3.00	9.00					16.25			
					M6-2L	DIRECTIONAL ARROW (LEFT)	1.75	1.25	2.19								

NOTE:
FOR PROPOSED SIGN SCHEDULE TOTAL, SEE SHEET 686H

AECOM
303 EAST WACKER DRIVE, SUITE 1400
CHICAGO, IL 60601-5276
PHONE: (312) 373-7700 FAX: (312) 373-6800

USER NAME = PIMSARNO	DESIGNED - OPS	REVISED -
	DRAWN - OPS	REVISED -
PLOT SCALE = 100.0000 ' / in.	CHECKED - TJW	REVISED -
PLOT DATE = 02/10/25	DATE - 02/06/2025	REVISED -

STATE OF ILLINOIS
DEPARTMENT OF TRANSPORTATION

PROPOSED SIGN SCHEDULE

SCALE: NONE | SHEET 10 OF 14 SHEETS | STA. | TO STA.

F.A.P. RTE.	SECTION	COUNTY	TOTAL SHEETS	SHEET NO.
326	2024-1052-N,C,SW,FL	MCHENRY	941	686D
		CONTRACT NO. 62X94		
	ILLINOIS	FED. AID PROJECT		

MODEL: Default
FILE NAME: pw:\\aecom-na-pw.bentley.com:AECOM DS2 - NA 2020\Documents\60632011-IL-471900-CADD\10 CADD\03 SHEETS\Civil\D160X17-sht-sign-schedule-07.dgn

PROPOSED SIGN SCHEDULE:

SIGN NO.	SIGN FACING DIRECTION	ROADWAY	STATION	OFFSET	CODE	LEGEND/DESCRIPTION	PROPOSED DIMENSIONS		SIGN PANEL - TYPE 1	SIGN PANEL - TYPE 2	SIGN PANEL - TYPE 3	OBJECT MARKER - TYPE 1	OBJECT MARKER - TYPE 3	TELESCOPING STEEL SIGN SUPPORT	BASE FOR TELESCOPING STEEL SIGN SUPPORT	METAL POST - TYPE A	METAL POST - TYPE B
							WIDTH (FT)	HEIGHT (FT)	(SQ FT)	(SQ FT)	(SQ FT)	(EACH)	(EACH)	(FT)	(EACH)	(FT)	(FT)
P-SGN13-20	NORTHWEST	LAKE AVE	130+75.00	156.00' LT	W11-2	PEDESTRIAN	3.00	3.00	9.00					14.25	1		
					M6-2L	DIRECTIONAL ARROW (LEFT)	1.75	1.25	2.19								
P-SGN13-21	NORTHWEST	LAKE AVE	130+07.00	146.00' LT	W11-2	PEDESTRIAN	3.00	3.00	9.00					16.25			
					M6-2L	DIRECTIONAL ARROW (LEFT)	1.75	1.25	2.19								
P-SGN13-22	NORTH	IL ROUTE 47	129+39.00	68.00' LT	W11-2	PEDESTRIAN	3.00	3.00	9.00					16.25			
					M6-2L	DIRECTIONAL ARROW (LEFT)	1.75	1.25	2.19								
P-SGN13-23	SOUTHWEST	IL ROUTE 47	129+20.67	45.31' RT	W11-2	PEDESTRIAN	3.00	3.00	9.00					16.25			
					M6-2L	DIRECTIONAL ARROW (LEFT)	1.75	1.25	2.19								
P-SGN13-24	SOUTHEAST	LAKE AVE	130+17.96	102.98' RT	W11-2	PEDESTRIAN	3.00	3.00	9.00					14.25	1		
					M6-2L	DIRECTIONAL ARROW (LEFT)	1.75	1.25	2.19								
P-SGN13-25	WEST	IL ROUTE 47	129+35.55	56.96' RT	R1-3	YIELD	3.00	3.00	9.00					15.00			
P-SGN13-26	SOUTHEAST	LAKE AVE	129+85.88	84.89' RT	M6-2R	DIRECTIONAL ARROW (RIGHT)	1.75	1.25	2.19					14.25	1		
					W11-2	PEDESTRIAN	3.00	3.00	9.00								
P-SGN13-27	SOUTHEAST	LAKE AVE	130+54.67	72.78' RT	M6-2R	DIRECTIONAL ARROW (RIGHT)	1.75	1.25	2.19					14.25	1		
					W11-2	PEDESTRIAN	3.00	3.00	9.00								
P-SGN13-28	NORTHEAST	IL ROUTE 47	131+54.92	0.78' LT	M6-2R	DIRECTIONAL ARROW (RIGHT)	1.75	1.25	2.19					14.25	1		
					W11-2	PEDESTRIAN	3.00	3.00	9.00								
P-SGN13-29	NORTHEAST	IL ROUTE 47	131+55.25	59.12' LT	M6-2R	DIRECTIONAL ARROW (RIGHT)	1.75	1.25	2.19					14.25	1		
					W11-2	PEDESTRIAN	3.00	3.00	9.00								
P-SGN13-30	EAST	LAKE AVE	131+11.50	112.00' LT	M6-2R	DIRECTIONAL ARROW (RIGHT)	1.75	1.25	2.19					14.25	1		
					W11-2	PEDESTRIAN	3.00	3.00	9.00								
P-SGN13-31	NORTHWEST	LAKE AVE	130+27.50	132.00' LT	M6-2R	DIRECTIONAL ARROW (RIGHT)	1.75	1.25	2.19					14.25	1		
					W11-2	PEDESTRIAN	3.00	3.00	9.00								
P-SGN13-32	NORTH	IL ROUTE 47	129+51.32	34.82' LT	M6-2R	DIRECTIONAL ARROW (RIGHT)	1.75	1.25	2.19					14.25	1		
					W11-2	PEDESTRIAN	3.00	3.00	9.00								
P-SGN13-33	SOUTHWEST	IL ROUTE 47	129+33.02	15.08' RT	M6-2R	DIRECTIONAL ARROW (RIGHT)	1.75	1.25	2.19					14.25	1		
					W11-2	PEDESTRIAN	3.00	3.00	9.00								
P-SGN13-34	NORTHWEST	IL ROUTE 47	129+75.10	44.69' LT	M3-3	SOUTH	2.00	1.00	2.00					15.25	1		
					M1-1100	ILLINOIS STATE ROUTE 47	3.00	3.00	9.00								
					M6-2	DIRECTIONAL ARROW	1.75	1.25	2.19								
P-SGN13-35	SOUTH	IL ROUTE 47	128+30.68	6.56' LT	M3-1	NORTH	2.00	1.00	2.00					15.25	1		
					M1-1100	ILLINOIS STATE ROUTE 47	3.00	3.00	9.00								
					M6-2	DIRECTIONAL ARROW	1.75	1.25	2.19								
P-SGN13-36	SOUTHEAST	IL ROUTE 47	129+71.67	126.90' RT	M3-1	NORTH	2.00	1.00	2.00					15.25	1		
					M1-1100	ILLINOIS STATE ROUTE 47	3.00	3.00	9.00								
					M6-2	DIRECTIONAL ARROW	1.75	1.25	2.19								
P-SGN13-37	SOUTH	IL ROUTE 47	131+25.00	8.50' RT	M3-1	NORTH	2.00	1.00	2.00					15.25	1		
					M1-1100	ILLINOIS STATE ROUTE 47	3.00	3.00	9.00								
					M6-2	DIRECTIONAL ARROW	1.75	1.25	2.19								
P-SGN13-38	SOUTHEAST	LAKE AVE	130+08.30	134.85' RT	W12-1	DOUBLE ARROW	3.00	3.00	9.00					13.00	1		
P-SGN13-39	NORTHEAST	IL ROUTE 47	132+29.68	27.42' LT	W12-2	DOUBLE ARROW	3.00	3.00	9.00					13.00	1		
P-SGN13-40	SOUTH	IL ROUTE 47	129+15.78	11.21' RT	W12-3	DOUBLE ARROW	3.00	3.00	9.00					13.00	1		
P-SGN13-41	WEST	LAKE AVE	129+95.10	41.86' RT	D1-1d	STREET NAME: EAST LAKE AVE WITH ARROW	5.50	2.50		13.75				25.00	2		
P-SGN13-42	EAST	LAKE AVE	131+07.84	90.19' LT	D1-1d	STREET NAME: WEST LAKE AVE WITH ARROW	5.50	2.50		13.75				25.00	2		
P-SGN14-01	SOUTH	ROUNDABOUT	138+40.36	18.72' RT	R6-1R	ONE WAY (RIGHT)	3.00	1.00	3.00					14.50			
					OM1-3	OBJECT MARKER TYPE 1 (YELLOW)	1.50	1.50				1					

NOTE:
FOR PROPOSED SIGN SCHEDULE TOTAL, SEE SHEET 686H

AECOM
303 EAST WACKER DRIVE, SUITE 1400
CHICAGO, IL 60601-5276
PHONE: (312) 373-7700 FAX: (312) 373-6800

USER NAME = PIMSARNO	DESIGNED - OPS	REVISED -	
	DRAWN - OPS	REVISED -	
PLOT SCALE = 100.0000 ' / in.	CHECKED - TJW	REVISED -	
PLOT DATE = 02/10/25	DATE - 02/06/2025	REVISED -	

STATE OF ILLINOIS
DEPARTMENT OF TRANSPORTATION

PROPOSED SIGN SCHEDULE

SCALE: NONE | SHEET 11 OF 14 SHEETS | STA. | TO STA.

F.A.P. RTE.	SECTION	COUNTY	TOTAL SHEETS	SHEET NO.
326	2024-1052-N,C,SW,FL	MCHENRY	941	686E
		CONTRACT NO. 62X94		
	ILLINOIS	FED. AID PROJECT		

MODEL: Default
FILE NAME: pw:\\aecom-na-pw.bentley.com:AECOM_DS21_NA_2020\Documents\60632011-IL-47-900-CAD-910_CAD\03_SHEETS\[vlID160X17-4ht-sign-schedule-07.dgn

PROPOSED SIGN SCHEDULE:

SIGN NO.	SIGN FACING DIRECTION	ROADWAY	STATION	OFFSET	CODE	LEGEND/DESCRIPTION	PROPOSED DIMENSIONS		SIGN PANEL - TYPE 1	SIGN PANEL - TYPE 2	SIGN PANEL - TYPE 3	OBJECT MARKER - TYPE 1	OBJECT MARKER - TYPE 3	TELESCOPING STEEL SIGN SUPPORT	BASE FOR TELESCOPING STEEL SIGN SUPPORT	METAL POST - TYPE A	METAL POST - TYPE B
							WIDTH (FT)	HEIGHT (FT)	(SQ FT)	(SQ FT)	(SQ FT)	(EACH)	(EACH)	(FT)	(EACH)	(FT)	(FT)
P-SGN14-02	EAST	ROUNDABOUT	138+74.93	43.87' RT	R6-1R	ONE WAY (RIGHT)	3.00	1.00	3.00					14.50			
					OM1-3	OBJECT MARKER TYPE 1 (YELLOW)	1.50	1.50				1					
P-SGN14-03	NORTH	ROUNDABOUT	139+07.85	18.67' RT	R6-1R	ONE WAY (RIGHT)	3.00	1.00	3.00					14.50			
					OM1-3	OBJECT MARKER TYPE 1 (YELLOW)	1.50	1.50				1					
P-SGN14-04	WEST	ROUNDABOUT	138+74.93	6.90' LT	R6-1R	ONE WAY (RIGHT)	3.00	1.00	3.00					14.50			
					OM1-3	OBJECT MARKER TYPE 1 (YELLOW)	1.50	1.50				1					
P-SGN14-05	EAST	MCCONNELL RD	139+38.96	91.03' RT	R1-2	YIELD	3.00	3.00	9.00					13.00	1		
P-SGN14-06	SOUTHEAST	MCCONNELL RD	139+64.26	101.53' RT	R1-3	YIELD	3.00	3.00	9.00					15.00			
P-SGN14-07	NORTHEAST	IL ROUTE 47	139+52.00	17.00' RT	R1-4	YIELD	3.00	3.00	9.00					13.00	1		
P-SGN14-08	NORTHEAST	IL ROUTE 47	139+69.62	17.33' LT	R1-5	YIELD	3.00	3.00	9.00					15.00			
P-SGN14-09	WEST	IL ROUTE 47	138+01.00	19.50' RT	R1-6	YIELD	3.00	3.00	9.00					13.00	1		
P-SGN14-10	WEST	IL ROUTE 47	137+76.00	49.00' RT	R1-7	YIELD	3.00	3.00	9.00					15.00			
P-SGN14-11	EAST	MCCONNELL RD	139+59.66	138.95' RT	W11-2	PEDESTRIAN	3.00	3.00	9.00					16.25			
					M6-2L	DIRECTIONAL ARROW (LEFT)	1.75	1.25	2.19								
P-SGN14-12	SOUTH	IL ROUTE 47	139+78.43	81.68' RT	W11-2	PEDESTRIAN	3.00	3.00	9.00					16.25			
					M6-2L	DIRECTIONAL ARROW (LEFT)	1.75	1.25	2.19								
P-SGN14-13	NORTH	IL ROUTE 47	139+90.00	9.00' LT	W11-2	PEDESTRIAN	3.00	3.00	9.00					16.25			
					M6-2L	DIRECTIONAL ARROW (LEFT)	1.75	1.25	2.19								
P-SGN14-14	WEST	MCCONNELL RD	138+62.03	139.32' RT	W11-2	PEDESTRIAN	3.00	3.00	9.00					16.25			
					M6-2L	DIRECTIONAL ARROW (LEFT)	1.75	1.25	2.19								
P-SGN14-15	EAST	MCCONNELL RD	139+30.45	140.61' RT	W11-2	PEDESTRIAN	3.00	3.00	9.00					14.25	1		
					M6-2L	DIRECTIONAL ARROW (LEFT)	1.75	1.25	2.19								
P-SGN14-16	EAST	MCCONNELL RD	139+03.40	135.59' RT	W11-2	PEDESTRIAN	3.00	3.00	9.00					14.25	1		
					M6-2R	DIRECTIONAL ARROW (RIGHT)	1.75	1.25	2.19								
P-SGN14-17	EAST	MCCONNELL RD	139+35.21	139.84' RT	W11-2	PEDESTRIAN	3.00	3.00	9.00					14.25	1		
					M6-2R	DIRECTIONAL ARROW (RIGHT)	1.75	1.25	2.19								
P-SGN14-18	SOUTH	IL ROUTE 47	139+63.00	44.50' RT	W11-2	PEDESTRIAN	3.00	3.00	9.00					14.25	1		
					M6-2R	DIRECTIONAL ARROW (RIGHT)	1.75	1.25	2.19								
P-SGN14-19	NORTHEAST	IL ROUTE 47	139+74.00	25.00' RT	W11-2	PEDESTRIAN	3.00	3.00	9.00					14.25	1		
					M6-2R	DIRECTIONAL ARROW (RIGHT)	1.75	1.25	2.19								
P-SGN14-20	NORTH	IL ROUTE 47	138+12.00	22.00' LT	M3-3	SOUTH	2.00	1.00	2.00					15.25	1		
					M1-I100	ILLINOIS STATE ROUTE 47	3.00	3.00	9.00								
					M6-2	DIRECTIONAL ARROW	1.75	1.25	2.19								
P-SGN14-21	SOUTH	IL ROUTE 47	139+45.00	50.00' RT	M3-3	NORTH	2.00	1.00	2.00					15.25	1		
					M1-I100	ILLINOIS STATE ROUTE 47	3.00	3.00	9.00								
					M6-2	DIRECTIONAL ARROW	1.75	1.25	2.19								
P-SGN14-22	NORTHEAST	IL ROUTE 47	139+20.35	52.80' LT	D3-1 SPECIAL	STREET NAME: MCCONNELL RD WITH ARROW	6.50	1.50		9.75							25.00
P-SGN14-23	WEST	MCCONNELL RD	138+50.80	62.22' LT	R1-5	YIELD	3.00	3.00	9.00					15.00			
P-SGN14-24	SOUTH	IL ROUTE 47	137+62.84	0.79' LT	R4-7	KEEP RIGHT (FACING SOUTH)	2.00	2.50	5.00					14.00	1		
					OM1-3	OBJECT MARKER TYPE 1 (YELLOW)	1.50	1.50	2.25								
P-SGN14-25	EAST	MCCONNELL RD	139+12.46	164.55' RT	R4-7	KEEP RIGHT (FACING EAST)	2.00	2.50	5.00					14.00	1		
					OM1-3	OBJECT MARKER TYPE 1 (YELLOW)	1.50	1.50	2.25								
P-SGN14-26	EAST	MCCONNELL RD	139+36.54	158.40' RT	W12-1	DOUBLE ARROW	3.00	3.00	9.00					13.00	1		
P-SGN14-27	WEST	MCCONNELL RD	138+74.71	110.11' RT	D3-1 SPECIAL	STREET NAME: MCCONNELL RD WITH ARROW	6.50	1.50		9.75							25.00
P-SGN14-28	WEST	MCCONNELL RD	138+85.92	124.44' RT	W11-2	PEDESTRIAN	3.00	3.00	9.00					14.25	1		
					M6-2R	DIRECTIONAL ARROW (RIGHT)	1.75	1.25	2.19								
P-SGN14-29	EAST	MCCONNELL RD	139+02.79	105.89' RT	R1-5	YIELD	3.00	3.00	9.00					13.00	1		

NOTE:
FOR PROPOSED SIGN SCHEDULE TOTAL, SEE SHEET 686H

AECOM
303 EAST WACKER DRIVE, SUITE 1400
CHICAGO, IL 60601-5276
PHONE: (312) 373-7700 FAX: (312) 373-6800

USER NAME = PIMSARNO	DESIGNED - OPS	REVISED -
	DRAWN - OPS	REVISED -
PLOT SCALE = 100.0000 ' / in.	CHECKED - TJW	REVISED -
PLOT DATE = 02/10/25	DATE - 02/06/2025	REVISED -

STATE OF ILLINOIS
DEPARTMENT OF TRANSPORTATION

PROPOSED SIGN SCHEDULE

SCALE: NONE | SHEET 12 OF 14 SHEETS | STA. | TO STA.

F.A.P. RTE.	SECTION	COUNTY	TOTAL SHEETS	SHEET NO.
326	2024-1052-N,C,SW,FL	MCHENRY	941	686F
		CONTRACT NO. 62X94		
	ILLINOIS FED. AID PROJECT			

MODEL: Default
FILE NAME: pw:\\aecom-na-pw.bentley.com:AECOM DS21_NA 2020\Documents\60632011-IL-417900-CAD910 CAD\03 SHEETS\Civil\D160X17-sht-sign-schedule-07.dgn

PROPOSED SIGN SCHEDULE:

SIGN NO.	SIGN FACING DIRECTION	ROADWAY	STATION	OFFSET	CODE	LEGEND/DESCRIPTION	PROPOSED DIMENSIONS		SIGN PANEL - TYPE 1	SIGN PANEL - TYPE 2	SIGN PANEL - TYPE 3	OBJECT MARKER - TYPE 1	OBJECT MARKER - TYPE 3	TELESCOPING STEEL SIGN SUPPORT	BASE FOR TELESCOPING STEEL SIGN SUPPORT	METAL POST - TYPE A	METAL POST - TYPE B
							WIDTH (FT)	HEIGHT (FT)	(SQ FT)	(SQ FT)	(SQ FT)	(EACH)	(EACH)	(FT)	(EACH)	(FT)	(FT)
P-SGN15-01	NORTH	ROUNDABOUT	183+57.88	28.47' RT	R6-1R	ONE WAY (RIGHT)	3.00	1.00	3.00					14.50			
					OM1-3	OBJECT MARKER TYPE 1 (YELLOW)	1.50	1.50				1					
P-SGN15-02	SOUTHEAST	ROUNDABOUT	183+21.00	22.86' RT	R6-1R	ONE WAY (RIGHT)	3.00	1.00	3.00					14.50			
					OM1-3	OBJECT MARKER TYPE 1 (YELLOW)	1.50	1.50				1					
P-SGN15-03	SOUTH	ROUNDABOUT	183+27.04	14.69' LT	R6-1R	ONE WAY (RIGHT)	3.00	1.00	3.00					14.50			
					OM1-3	OBJECT MARKER TYPE 1 (YELLOW)	1.50	1.50				1					
P-SGN15-04	NORTHEWEST	ROUNDABOUT	183+65.93	8.12' LT	R6-1R	ONE WAY (RIGHT)	3.00	1.00	3.00					14.50			
					OM1-3	OBJECT MARKER TYPE 1 (YELLOW)	1.50	1.50				1					
P-SGN15-05	SOUTH	IL ROUTE 47	182+61.83	9.96' RT	R1-2	YIELD	3.00	3.00	9.00					13.00	1		
P-SGN15-06	SOUTH	IL ROUTE 47	182+72.65	67.79' RT	R1-2	YIELD	3.00	3.00	9.00					13.00			
P-SGN15-07	EAST	IRVING AVE	183+62.83	103.43' RT	R1-2	YIELD	3.00	3.00	9.00					13.00	1		
P-SGN15-08	EAST	IRVING AVE	183+98.43	113.21' RT	R1-2	YIELD	3.00	3.00	9.00					15.00			
P-SGN15-09	NORTH	IL ROUTE 47	184+30.71	15.25' RT	R1-2	YIELD	3.00	3.00	9.00					13.00	1		
P-SGN15-10	NORTH	IL ROUTE 47	184+51.46	11.99' LT	R1-2	YIELD	3.00	3.00	9.00					15.00			
P-SGN15-11	WEST	JUDD ST	183+61.01	79.49' LT	R1-2	YIELD	3.00	3.00	9.00					13.00	1		
P-SGN15-12	WEST	JUDD ST	183+42.68	99.37' LT	R1-2	YIELD	3.00	3.00	9.00					15.00			
P-SGN15-13	WEST	IL ROUTE 47	182+50.73	57.62' LT	W11-2	PEDESTRIAN	3.00	3.00	9.00					16.25			
					M6-2L	DIRECTIONAL ARROW (LEFT)	1.75	1.25	2.19								
P-SGN15-14	SOUTH	IL ROUTE 47	182+20.40	29.56' RT	W11-2	PEDESTRIAN	3.00	3.00	9.00					16.25			
					M6-2L	DIRECTIONAL ARROW (LEFT)	1.75	1.25	2.19								
P-SGN15-15	SOUTH	IL ROUTE 47	183+06.38	123.56' RT	W11-2	PEDESTRIAN	3.00	3.00	9.00					16.25			
					M6-2L	DIRECTIONAL ARROW (LEFT)	1.75	1.25	2.19								
P-SGN15-16	NORTHEAST	IRVING AVE	183+94.84	139.48' RT	W11-2	PEDESTRIAN	3.00	3.00	9.00					16.25			
					M6-2L	DIRECTIONAL ARROW (LEFT)	1.75	1.25	2.19								
P-SGN15-17	EAST	IL ROUTE 47	184+42.51	84.47' RT	W11-2	PEDESTRIAN	3.00	3.00	9.00					16.25			
					M6-2L	DIRECTIONAL ARROW (LEFT)	1.75	1.25	2.19								
P-SGN15-18	NORTH	IL ROUTE 47	184+67.57	1.80' LT	W11-2	PEDESTRIAN	3.00	3.00	9.00					16.25			
					M6-2L	DIRECTIONAL ARROW (LEFT)	1.75	1.25	2.19								
P-SGN15-19	NORTHEAST	JUDD ST	184+17.49	84.90' LT	W11-2	PEDESTRIAN	3.00	3.00	9.00					16.25			
					M6-2L	DIRECTIONAL ARROW (LEFT)	1.75	1.25	2.19								
P-SGN15-20	WEST	JUDD ST	183+52.33	116.08' LT	W11-2	PEDESTRIAN	3.00	3.00	9.00					16.25			
					M6-2L	DIRECTIONAL ARROW (LEFT)	1.75	1.25	2.19								
P-SGN15-21	SOUTH	IL ROUTE 47	182+35.83	3.32' LT	W11-2	PEDESTRIAN	3.00	3.00	9.00					14.25	1		
					M6-2R	DIRECTIONAL ARROW (RIGHT)	1.75	1.25	2.19								
P-SGN15-22	SOUTH	IL ROUTE 47	183+30.74	110.04' RT	W11-2	PEDESTRIAN	3.00	3.00	9.00					14.25	1		
					M6-2R	DIRECTIONAL ARROW (RIGHT)	1.75	1.25	2.19								
P-SGN15-23	EAST	IRVING AVE	183+58.55	135.30' RT	W11-2	PEDESTRIAN	3.00	3.00	9.00					14.25	1		
					M6-2R	DIRECTIONAL ARROW (RIGHT)	1.75	1.25	2.19								
P-SGN15-24	EAST	IL ROUTE 47	184+37.48	51.09' RT	W11-2	PEDESTRIAN	3.00	3.00	9.00					14.25	1		
					M6-2R	DIRECTIONAL ARROW (RIGHT)	1.75	1.25	2.19								
P-SGN15-25	NORTH	IL ROUTE 47	184+55.59	29.12' RT	W11-2	PEDESTRIAN	3.00	3.00	9.00					14.25	1		
					M6-2R	DIRECTIONAL ARROW (RIGHT)	1.75	1.25	2.19								
P-SGN15-26	NORTHEAST	JUDD ST	183+92.00	84.81' LT	W11-2	PEDESTRIAN	3.00	3.00	9.00					14.25	1		
					M6-2R	DIRECTIONAL ARROW (RIGHT)	1.75	1.25	2.19								
P-SGN15-27	WEST	JUDD ST	183+77.59	104.03' LT	W11-2	PEDESTRIAN	3.00	3.00	9.00					14.25	1		
					M6-2R	DIRECTIONAL ARROW (RIGHT)	1.75	1.25	2.19								

NOTE:
FOR PROPOSED SIGN SCHEDULE TOTAL, SEE SHEET 686H

AECOM
303 EAST WACKER DRIVE, SUITE 1400
CHICAGO, IL 60601-5276
PHONE: (312) 373-7700 FAX: (312) 373-6800

USER NAME = PIMSARNO	DESIGNED - OPS	REVISED -	
	DRAWN - OPS	REVISED -	
PLOT SCALE = 100.0000 ' / in.	CHECKED - TJW	REVISED -	
PLOT DATE = 02/10/25	DATE - 02/06/2025	REVISED -	

STATE OF ILLINOIS
DEPARTMENT OF TRANSPORTATION

PROPOSED SIGN SCHEDULE

SCALE: NONE | SHEET 13 OF 14 SHEETS | STA. | TO STA.

F.A.P. RTE.	SECTION	COUNTY	TOTAL SHEETS	SHEET NO.
326	2024-1052-N,C,SW,FL	MCHENRY	941	686G
		CONTRACT NO. 62X94		
	ILLINOIS FED. AID PROJECT			

MODEL: Default
FILE NAME: pw:\\aecom-na-pw.bentley.com:AECOM DS21_NA 2020\Documents\60632011-IL-417900-CAD\910 CAD\03 SHEETS\Civil\D160X17-sht-sign-schedule-07.dgn

SIGN NO.	SIGN FACING DIRECTION	ROADWAY	STATION	OFFSET	CODE	LEGEND/DESCRIPTION	PROPOSED DIMENSIONS		SIGN PANEL - TYPE 1	SIGN PANEL - TYPE 2	SIGN PANEL - TYPE 3	OBJECT MARKER - TYPE 1	OBJECT MARKER - TYPE 3	TELESCOPING STEEL SIGN SUPPORT	BASE FOR TELESCOPING STEEL SIGN SUPPORT	METAL POST - TYPE A	METAL POST - TYPE B
							WIDTH (FT)	HEIGHT (FT)	(SQ FT)	(SQ FT)	(SQ FT)	(EACH)	(EACH)	(FT)	(EACH)	(FT)	(FT)
P-SGN15-28	NORTHWEST	IL ROUTE 47	182+57.88	27.03' LT	W11-2	PEDESTRIAN	3.00	3.00	9.00					14.25	1		
					M6-2R	DIRECTIONAL ARROW (RIGHT)	1.75	1.25	2.19								
P-SGN15-29	WEST	IL ROUTE 47	182+70.76	28.72' LT	M3-3	SOUTH	2.00	1.00	2.00					15.25	1		
					M1-I100	ILLINOIS STATE ROUTE 47	3.00	3.00	9.00								
					M6-2	DIRECTIONAL ARROW	1.75	1.25	2.19								
P-SGN15-30	EAST	IL ROUTE 47	184+21.73	53.15' RT	M3-3	NORTH	2.00	1.00	2.00					15.25	1		
					M1-I100	ILLINOIS STATE ROUTE 47	3.00	3.00	9.00								
					M6-2	DIRECTIONAL ARROW	1.75	1.25	2.19								
P-SGN15-31	NORTH	JUDD ST	183+92.12	65.65' LT	D1-1d	STREET NAME: JUDD ST WITH ARROW	5.00	1.50	7.50					13.50			25.00
P-SGN15-32	SOUTH	IRVING AVE	183+26.85	101.06' RT	D1-1d	STREET NAME: IRVING AV WITH ARROW	5.00	1.50	7.50					13.50			25.00
P-SGN15-33	NORTH	IRVING AVE	183+62.78	161.71' RT	R4-7	KEEP RIGHT (FACING NORTH)	2.00	2.50	5.00					14.00	1		
					OM1-3	OBJECT MARKER TYPE 1 (YELLOW)	1.50	1.50	2.25			1					
								TOTAL	2,977.31	288.44	824.50	47	4	4,587.25	123	13.50	210.00

MODEL: Default
FILE NAME: pw:\\aecom-na-piw.bentley.com:AECOM DS21 NA 2020\Documents\60632011-IL-47900-CAD910 CAD\03 SHEETS\CivilD160X17-dht-sign-schedule-07.dgn

AECOM
303 EAST WACKER DRIVE, SUITE 1400
CHICAGO, IL 60601-5276
PHONE: (312) 373-7700 FAX: (312) 373-6800

USER NAME = PIMSARNO	DESIGNED -	REVISED -	OPS
	DRAWN -	REVISED -	OPS
PLOT SCALE = 100.0000 ' / in.	CHECKED -	REVISED -	TJW
PLOT DATE = 02/10/25	DATE -	REVISED -	02/06/2025

STATE OF ILLINOIS
DEPARTMENT OF TRANSPORTATION

PROPOSED SIGN SCHEDULE

SCALE: | SHEET 14 OF 14 SHEETS | STA. | TO STA.

F.A.P. RTE.	SECTION	COUNTY	TOTAL SHEETS	SHEET NO.
326	2024-1052-N,C,SW,FL	MCHENRY	941	686H
		CONTRACT NO. 62X94		
	ILLINOIS FED. AID PROJECT			

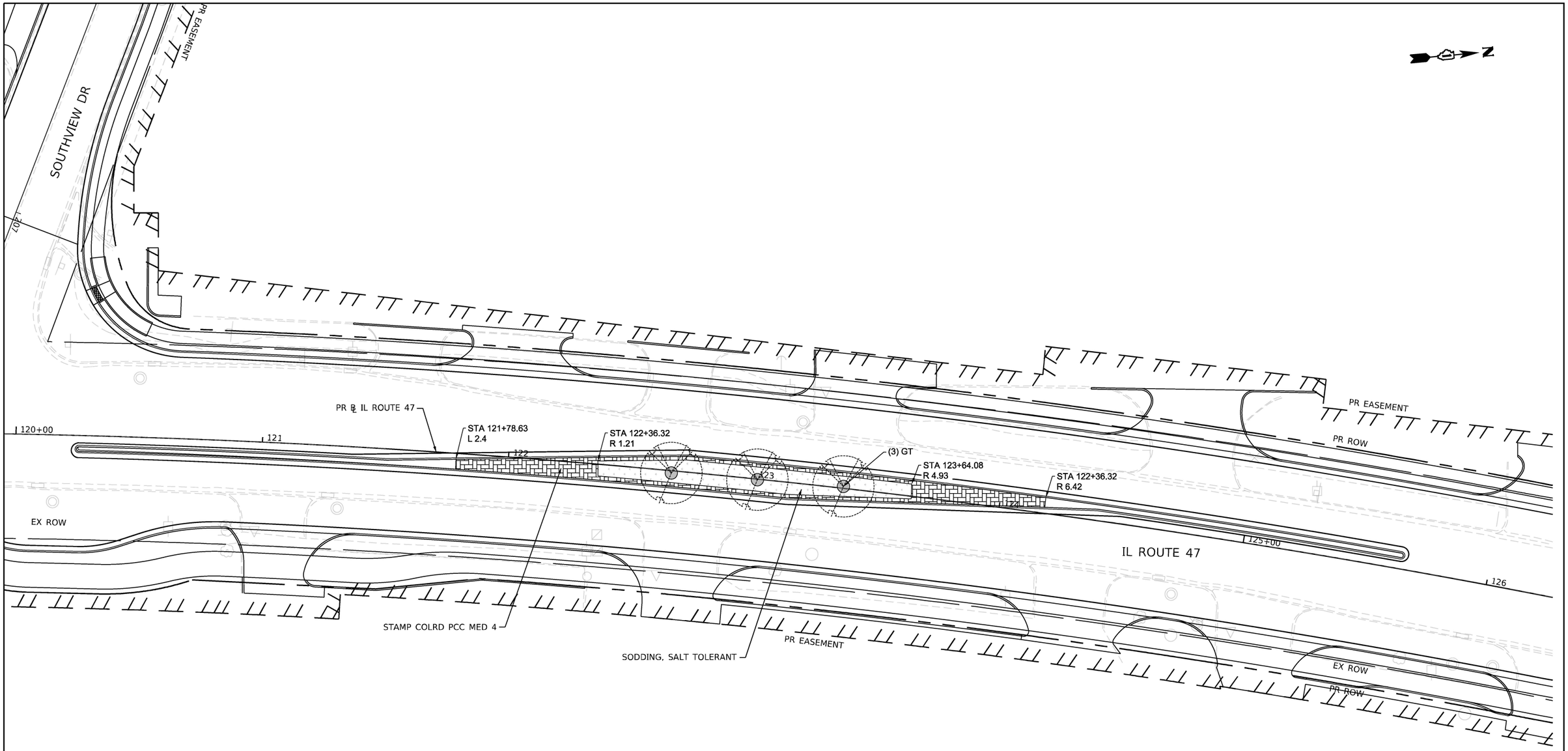

KEY MAP

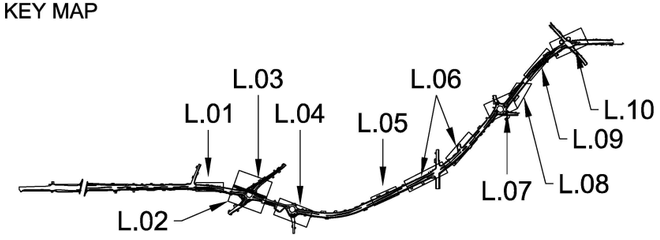

LEGEND

- SODDING, SALT TOLERANT
- SHREDDED BARK MULCH 4"
- STAMPED COLORED PORTLAND CEMENT CONCRETE MEDIAN SURFACE, SIDEWALK, OR CROSSWALK
- SHADE TREE
- SHRUB
- GRASS
- PERENNIAL

L.01

HRG PROJECT NO.: $PROJECTNO$
HRG PROJ. CONTACT: $HRGPM$
FILE NAME: D16OXI7-sht-Land-02.dgn
PLOT DRIVER: PLT_DRV
PEN TABLE: PEN_TABLE

HRGreen.com
Illinois Professional Design Firm
184-001322

USER NAME = mzuzzio	DESIGNED - JFR	REVISED -	
	DRAWN - JFR	REVISED -	
PLOT SCALE = 40.0000 ' / in.	CHECKED - JTK	REVISED -	
PLOT DATE = 02/06/2025	DATE -	REVISED -	

STATE OF ILLINOIS
DEPARTMENT OF TRANSPORTATION

STREETSCAPE PLAN
IL ROUTE 47

SCALE: 1"=20' | SHEET 1 OF 11 SHEETS | STA. TO STA.

F.A.P RTE.	SECTION NO.	COUNTY	TOTAL SHEETS	SHEET NO.
326	2024-1052-N, C, SW, FL	McHENRY	941	687
		CONTRACT NO. 62X94		
FED. ROAD DIST. NO.	ILLINOIS	FED. AID PROJECT		

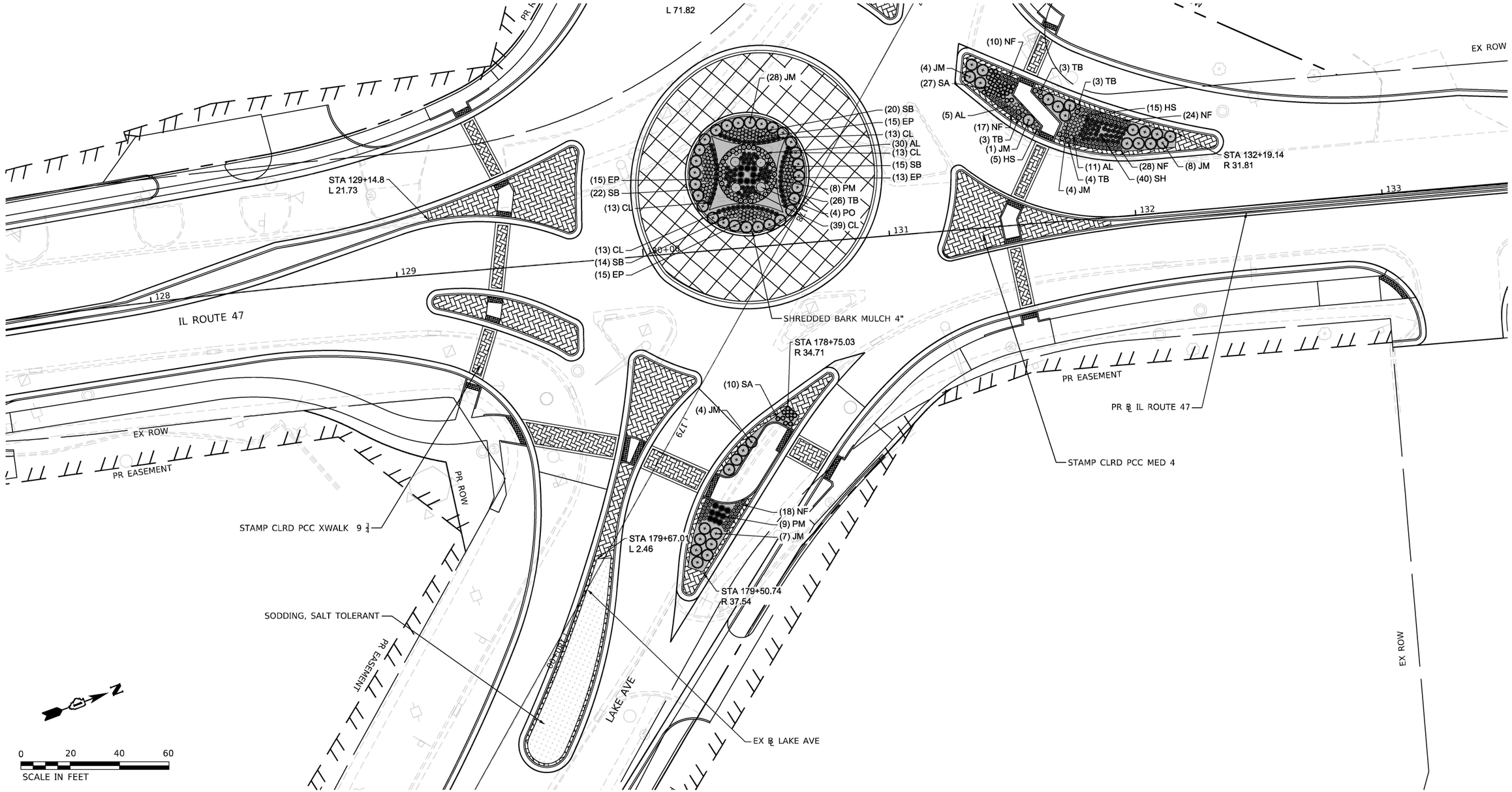

KEY MAP

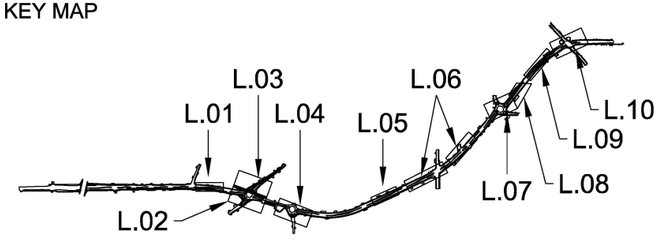

LEGEND

	SODDING, SALT TOLERANT		SHADE TREE
	SHREDDED BARK MULCH 4"		SHRUB
	STAMPED COLORED PORTLAND CEMENT CONCRETE MEDIAN SURFACE, SIDEWALK, OR CROSSWALK		GRASS
			PERENNIAL

L.02

HRG PROJECT NO.: $PROJECTNO$
HRG PROJ. CONTACT: $HRGPM$
FILE NAME: DIGOXIT-sht-Land-03.dgn
PLOT DRIVER: PLT_DRV
PEN TABLE: PEN_TABLE

HRGreen.com
Illinois Professional Design Firm
184-001322

USER NAME = mzuzzio	DESIGNED - JFR	REVISED -	
	DRAWN - JFR	REVISED -	
PLOT SCALE = 40.0000 ' / in.	CHECKED - JTK	REVISED -	
PLOT DATE = 02/06/2025	DATE -	REVISED -	

STATE OF ILLINOIS
DEPARTMENT OF TRANSPORTATION

STREETSCAPE PLAN
IL ROUTE 47

SCALE: 1"=20' | SHEET 2 OF 11 SHEETS | STA. | TO STA.

F.A.P RTE.	SECTION NO.	COUNTY	TOTAL SHEETS	SHEET NO.
326	2024-1052-N, C, SW, FL	McHENRY	941	688
		CONTRACT NO. 62X94		
FED. ROAD DIST. NO.	ILLINOIS	FED. AID PROJECT		

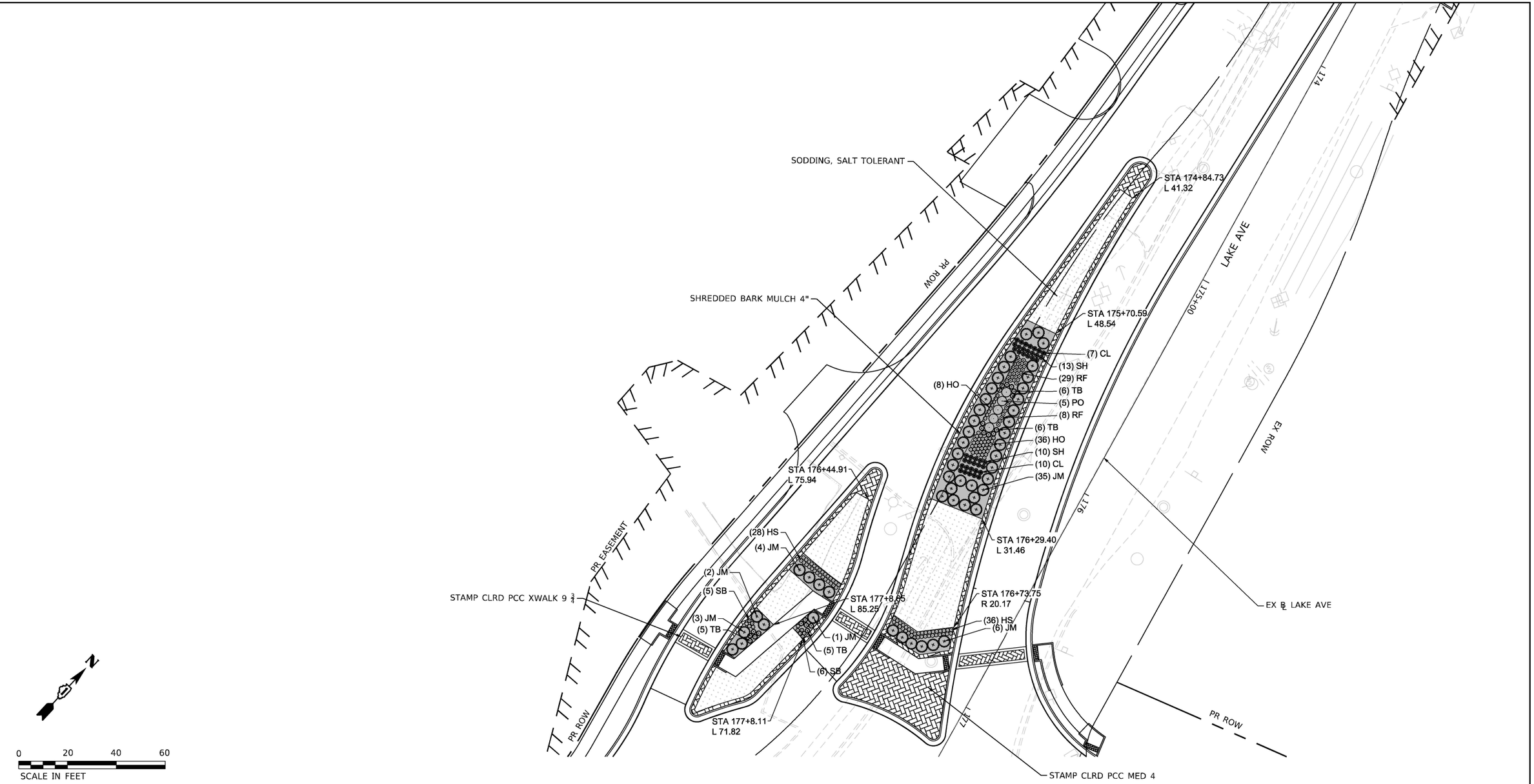

KEY MAP

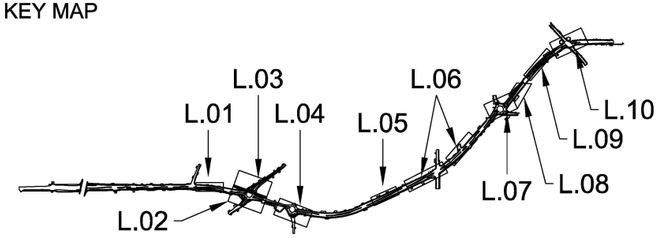

LEGEND

- SODDING, SALT TOLERANT
- SHREDDED BARK MULCH 4"
- STAMPED COLORED PORTLAND CEMENT CONCRETE MEDIAN SURFACE, SIDEWALK, OR CROSSWALK
- SHADE TREE
- SHRUB
- GRASS
- PERENNIAL

L.03

HRG PROJECT NO.: $PROJECTNO$
HRG PROJ. CONTACT: $HRGPM$
FILE NAME: D160X17-sht-Land-04.dgn
PLOT DRIVER: PLT_DRV
PEN TABLE: PEN_TABLE

HRGreen.com
Illinois Professional Design Firm
184-001322

USER NAME = mzuzzio	DESIGNED - JFR	REVISED -	
	DRAWN - JFR	REVISED -	
PLOT SCALE = 40.0000 ' / in.	CHECKED - JTK	REVISED -	
PLOT DATE = 02/06/2025	DATE -	REVISED -	

STATE OF ILLINOIS
DEPARTMENT OF TRANSPORTATION

STREETSCAPE PLAN
IL ROUTE 47

SCALE: 1"=20' | SHEET 3 OF 11 SHEETS | STA. TO STA.

F.A.P RTE.	SECTION NO.	COUNTY	TOTAL SHEETS	SHEET NO.
326	2024-1052-N, C, SW, FL	McHENRY	941	689
		CONTRACT NO. 62X94		
FED. ROAD DIST. NO.	ILLINOIS	FED. AID PROJECT		

SHREDDED BARK MULCH 4"

PR ROW

EX ROW

PR PERM EASEMENT

IL ROUTE 47

STAMPED CLRD PCC XWALK 9 3/4

PR ℄ IL ROUTE 47

STA 140+16.46
R 23.13

STAMPED CLRD PCC MED 4

MCCONNELL RD

PR EASEMENT

(6) JM
(9) EP
(14) SB
(12) CL
(16) CL
(14) CL
(44) SB
(8) JM
(20) EP
(56) SB
(9) JM
(40) EP
(39) CL
(8) PM
(30) AL
(4) PO
(26) TB
(14) CL
(14) SB
(16) EP
(7) JM

136
137
138
139
140+00
141
142
2646
2647
2648

0 20 40 60
SCALE IN FEET

KEY MAP

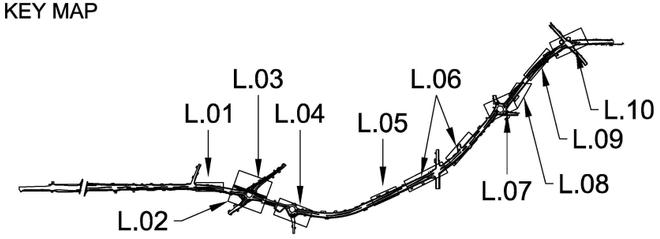

LEGEND

- SODDING, SALT TOLERANT
- SHREDDED BARK MULCH 4"
- STAMPED COLORED PORTLAND CEMENT CONCRETE MEDIAN SURFACE, SIDEWALK, OR CROSSWALK
- SHADE TREE
- SHRUB
- GRASS
- PERENNIAL

L.04

HRG PROJECT NO.: #PROJECT#0#
HRG PROJ. CONTACT: #HRGPM#
FILE NAME: D:\GDX17-sh1-Land-05.dgn
PLOT DRIVER: #PLT_DRV#
PEN TABLE: #PEN_TABLE#

HRGreen.com
Illinois Professional Design Firm
184-001322

USER NAME = mzuzzio	DESIGNED - JFR	REVISED -
	DRAWN - JFR	REVISED -
PLOT SCALE = 40.0000 ' / in.	CHECKED - JTK	REVISED -
PLOT DATE = 02/06/2025	DATE -	REVISED -

STATE OF ILLINOIS
DEPARTMENT OF TRANSPORTATION

STREETSCAPE PLAN
IL ROUTE 47

SCALE: 1"=20' | SHEET 4 OF 11 SHEETS | STA. | TO STA.

F.A.P RTE.	SECTION NO.	COUNTY	TOTAL SHEETS	SHEET NO.
326	2024-1052-N, C, SW, FL	McHENRY	941	690
		CONTRACT NO. 62X94		
FED. ROAD DIST. NO.	ILLINOIS	FED. AID PROJECT		

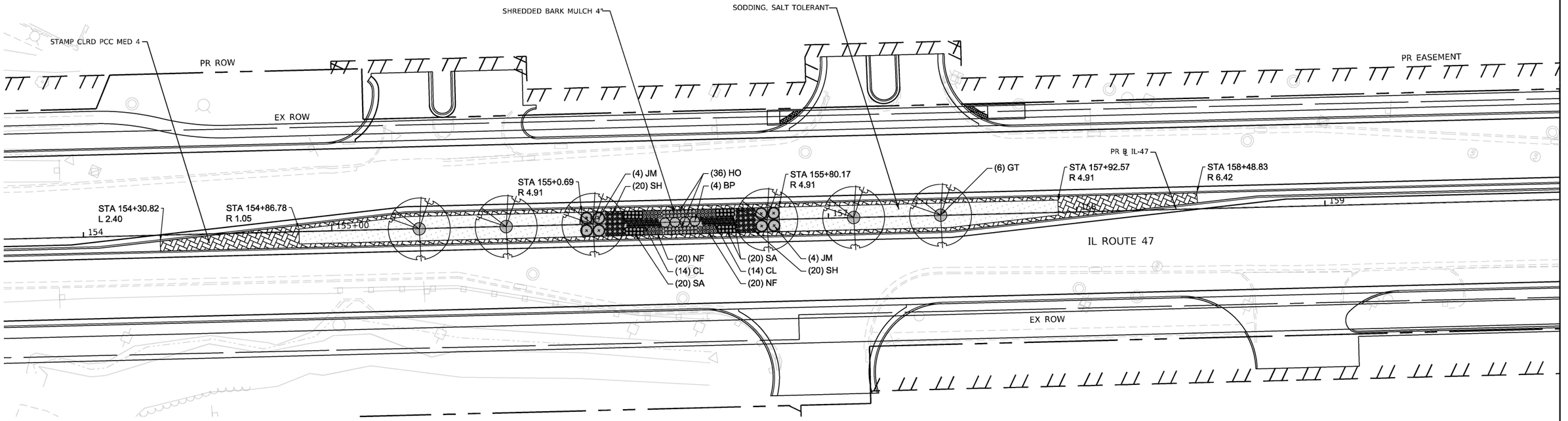

KEY MAP

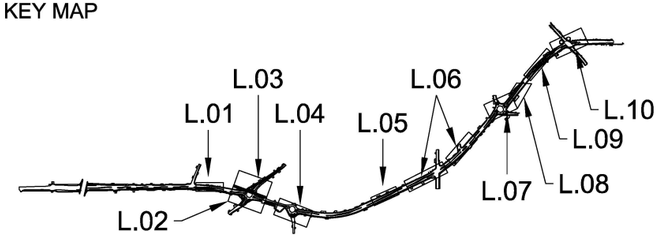

LEGEND

- SODDING, SALT TOLERANT
- SHREDDED BARK MULCH 4"
- STAMPED COLORED PORTLAND CEMENT CONCRETE MEDIAN SURFACE, SIDEWALK, OR CROSSWALK
- SHADE TREE
- SHRUB
- GRASS
- PERENNIAL

0 20 40 60
SCALE IN FEET

L.05

HRG PROJECT NO.: $PROJECTNO$
HRG PROJ CONTACT: $HRGPM$
FILE NAME: D:\2017-sht-Land-06.dgn
PLOT DRIVER: PLT_DRV
PEN TABLE: PEN_TABLE

HRGreen.com
Illinois Professional Design Firm
184-001322

USER NAME = mzuzzio	DESIGNED - JFR	REVISED -
	DRAWN - JFR	REVISED -
PLOT SCALE = 40.0000 ' / in.	CHECKED - JTK	REVISED -
PLOT DATE = 02/06/2025	DATE -	REVISED -

STATE OF ILLINOIS
DEPARTMENT OF TRANSPORTATION

STREETSCAPE PLAN
IL ROUTE 47

SCALE: 1"=20' | SHEET 5 OF 11 SHEETS | STA. | TO STA.

F.A.P RTE.	SECTION NO.	COUNTY	TOTAL SHEETS	SHEET NO.
326	2024-1052-N, C, SW, FL	McHENRY	941	691
		CONTRACT NO. 62X94		
FED. ROAD DIST. NO.	ILLINOIS	FED. AID PROJECT		

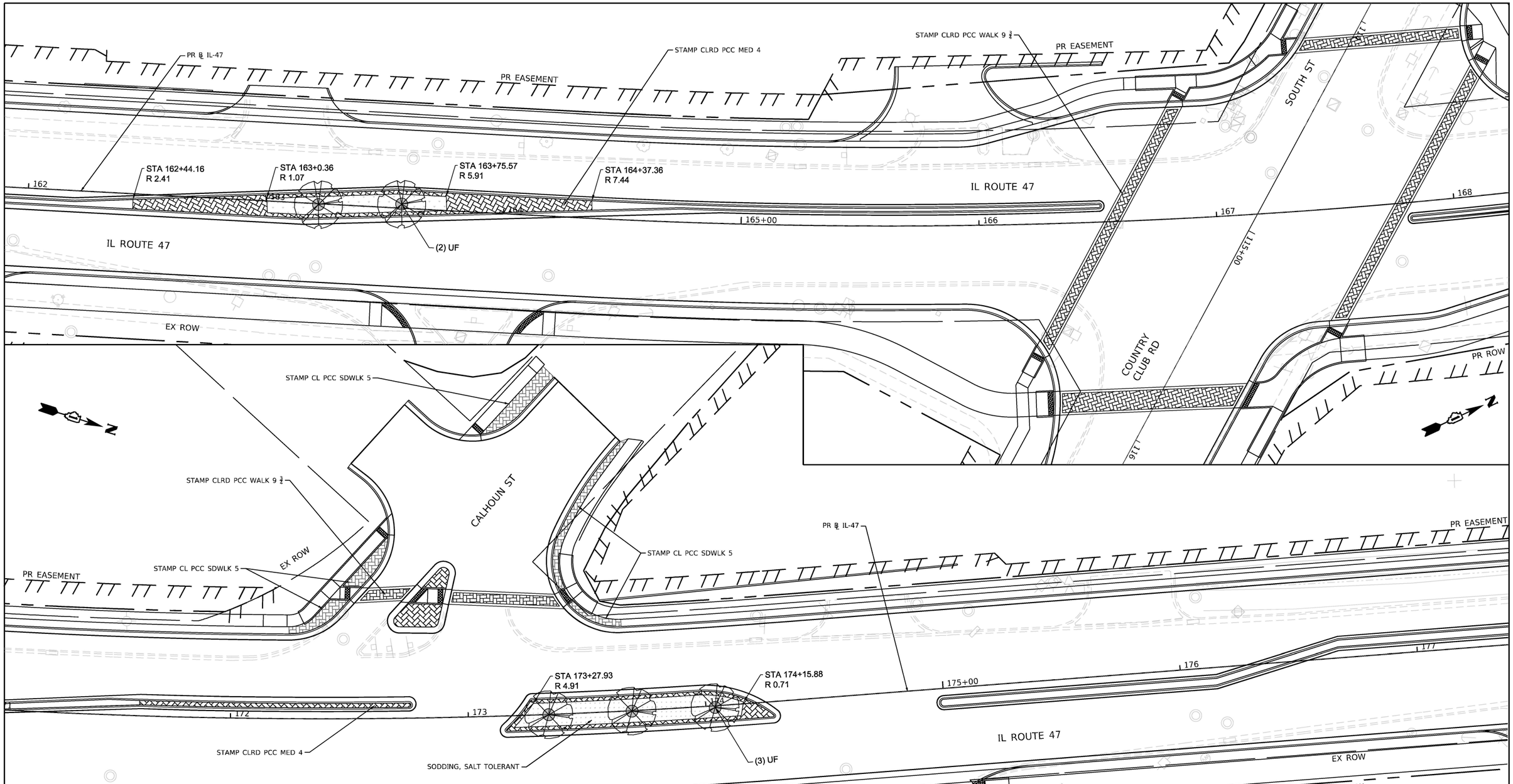

KEY MAP

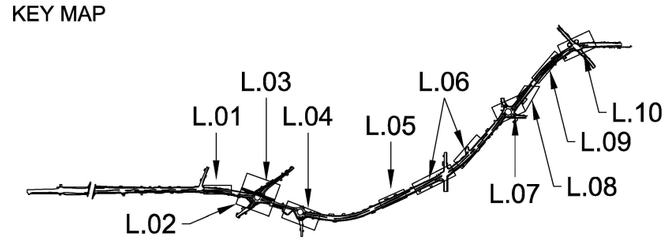

LEGEND

- SODDING, SALT TOLERANT
- SHREDDED BARK MULCH 4"
- STAMPED COLORED PORTLAND CEMENT CONCRETE MEDIAN SURFACE, SIDEWALK, OR CROSSWALK
- SHADE TREE
- SHRUB
- GRASS
- PERENNIAL

0 20 40 60
SCALE IN FEET

L.06

HRG PROJECT NO.: $PROJECTNO$
HRG PROJ. CONTACT: $HRGPM$
FILE NAME: D160X17-sht-Land-07.dgn
PLOT DRIVER: PLT_DRV
PEN TABLE: PEN_TABLE

HRGreen.com
Illinois Professional Design Firm
184-001322

USER NAME = mzuzzio	DESIGNED - JFR	REVISED -	
	DRAWN - JFR	REVISED -	
PLOT SCALE = 40.0000 ' / in.	CHECKED - JTK	REVISED -	
PLOT DATE = 02/06/2025	DATE -	REVISED -	

STATE OF ILLINOIS
DEPARTMENT OF TRANSPORTATION

STREETSCAPE PLAN
IL ROUTE 47

SCALE: 1"=20' | SHEET 6 OF 11 SHEETS | STA. | TO STA.

F.A.P RTE.	SECTION NO.	COUNTY	TOTAL SHEETS	SHEET NO.
326	2024-1052-N, C, SW, FL	McHENRY	941	692
		CONTRACT NO. 62X94		
FED. ROAD DIST. NO.	ILLINOIS	FED. AID PROJECT		

EX ℄ JUDD ST

JUDD ST

PR EASEMENT

PR ROW

PR ℄ IL-47

STA 181+79.63
R 11.84

STA 180+20.78
L 2.46

STA 180+42.15
R 0.92

SODDING, SALT TOLERANT

STAMP CLRD PCC XWALK 9 3/4

EX ROW

EX ℄ IRVING AVE

IRVING AVE

PR ROW

PR ROW

PR EASEMENT

IL ROUTE 47

STAMP CLRD PCC MED 4

SHREDDED BARK MULCH 4"

STA 185+94.64
L 29.99

STA 184+94.84
L 35.23

(7) JM
(15) EP
(14) SB
(13) CL

(13) CL
(8) SB
(13) EP
(7) JM
(7) SB

(13) CL
(22) SB
(7) JM
(15) EP

(8) PM
(4) PO
(26) TB
(30) AL
(39) CL

(13) CL
(20) SB
(7) JM
(15) EP

(20) CP
(20) SH
(4) JM

(6) UF

L 180+00
L 181
L 182
L 183
L 184
L 185+00
L 186
L 200+00
L 201
L 202
L 203

0 20 40 60
SCALE IN FEET

N

KEY MAP

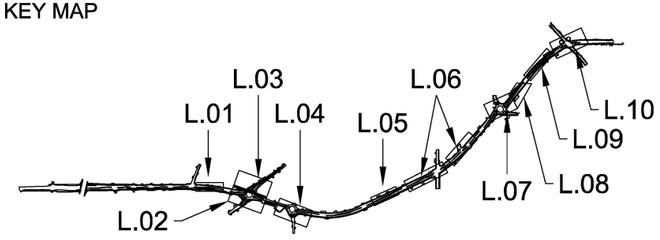

LEGEND

- SODDING, SALT TOLERANT
- SHREDDED BARK MULCH 4"
- STAMPED COLORED PORTLAND CEMENT CONCRETE MEDIAN SURFACE, SIDEWALK, OR CROSSWALK
- SHADE TREE
- SHRUB
- GRASS
- PERENNIAL

L.07

HRG PROJECT NO.: #PROJECTNO#
HRG PROJ CONTACT: #HRGPM#
FILE NAME: D:\GDOT\7-sht-1.ord-08.dgn
PLOT DRIVER: #PLT_DRV#
PEN TABLE: #PEN_TABLE#

HRGreen.com
Illinois Professional Design Firm
184-001322

USER NAME = mzuzzio	DESIGNED - JFR	REVISED -
	DRAWN - JFR	REVISED -
PLOT SCALE = 40.0000 ' / in.	CHECKED - JTK	REVISED -
PLOT DATE = 02/06/2025	DATE -	REVISED -

STATE OF ILLINOIS
DEPARTMENT OF TRANSPORTATION

STREETSCAPE PLAN
IL ROUTE 47

SCALE: 1"=20' | SHEET 7 OF 11 SHEETS | STA. | TO STA.

F.A.P RTE.	SECTION NO.	COUNTY	TOTAL SHEETS	SHEET NO.
326	2024-1052-N, C, SW, FL	McHENRY	941	693
		CONTRACT NO. 62X94		
FED. ROAD DIST. NO.	ILLINOIS	FED. AID PROJECT		

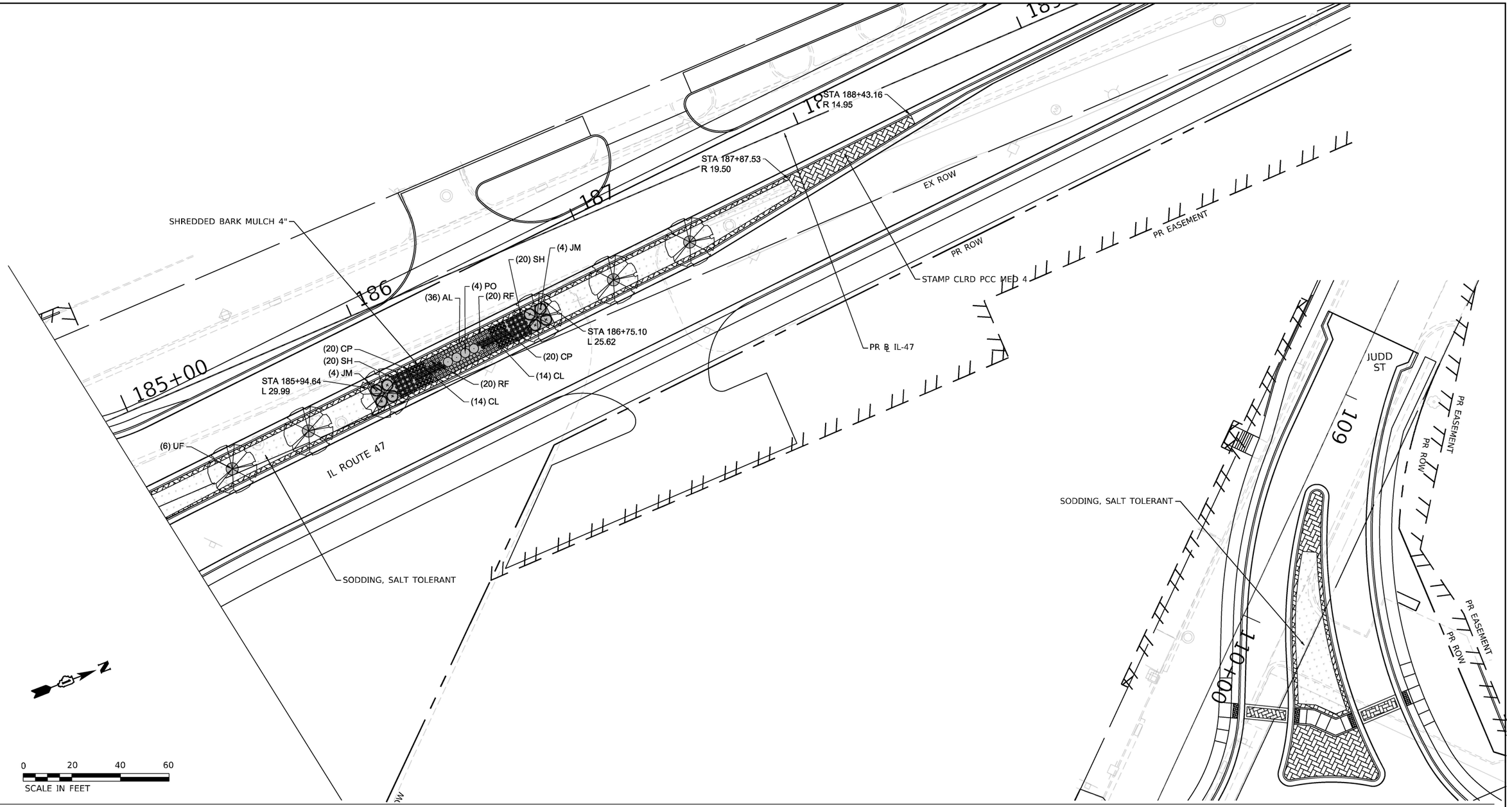

KEY MAP

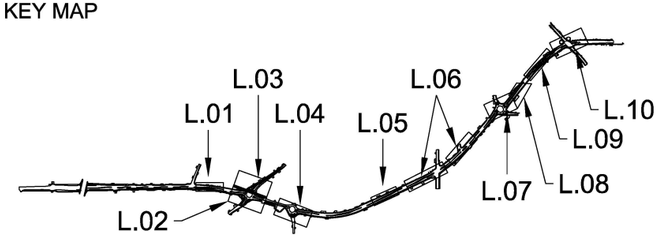

LEGEND

	SODDING, SALT TOLERANT		SHADE TREE
	SHREDDED BARK MULCH 4"		SHRUB
	STAMPED COLORED PORTLAND CEMENT CONCRETE MEDIAN SURFACE, SIDEWALK, OR CROSSWALK		GRASS
			PERENNIAL

L.08

HRG PROJECT NO.: $PROJECTNO$
HRG PROJ. CONTACT: $HRGPM$
FILE NAME: D160X17-sht-Land-09.dgn
PLOT DRIVER: PLT_DRV
PEN TABLE: PEN_TABLE

HRGreen.com
Illinois Professional Design Firm
184-001322

USER NAME = mzuzzio	DESIGNED - JFR	REVISED -	
	DRAWN - JFR	REVISED -	
PLOT SCALE = 40.0000 ' / in.	CHECKED - JTK	REVISED -	
PLOT DATE = 02/06/2025	DATE -	REVISED -	

STATE OF ILLINOIS
DEPARTMENT OF TRANSPORTATION

STREETSCAPE PLAN
IL ROUTE 47

SCALE: 1"=20' | SHEET 8 OF 11 SHEETS | STA. TO STA.

F.A.P RTE.	SECTION NO.	COUNTY	TOTAL SHEETS	SHEET NO.
326	2024-1052-N, C, SW, FL	McHENRY	941	694
		CONTRACT NO. 62X94		
FED. ROAD DIST. NO.	ILLINOIS	FED. AID PROJECT		

N

EX ROW

EASTWOOD CT

PR EASEMENT

PR ROW

IL ROUTE 47

STA 197+77.67
R 6.43

STA 196+10.79
R 4.91
L 197

STA 195+80.95
R 4.85
L 196

(14) CL
(20) SA
(20) SH
(4) JM
(20) NF
(14) CL
(36) HO
(3) AM
(20) NF
(4) BP
(20) SA
(20) SH
(4) JM

PR ROW
STAMP CLRD PCC MED 4

STA 194+39.70
R 4.79
STA 194+97.43
R 4.82

(20) RF
(14) CL
(20) CP
(20) RF
(14) CL
(4) JM
(20) SH
(20) CP
(4) PO
(36) AL

STA 193+57.40
L 4.85

(6) UF
(20) SA
STA 192+99.16
R 4.90
(14) CL
(4) BP
(20) NF
(36) HO
(20) SA
(20) SH
(4) JM
(14) CL
(20) NF
(20) SH
(4) JM
(20) SH
(4) JM

L 193

(3) AF
STA 192+18.40
L 3.63

L 192

PR EASEMENT

SODDING, SALT TOLERANT

SHREDDED BARK MULCH 4"

PR ℄ IL RTE 47

KEY MAP

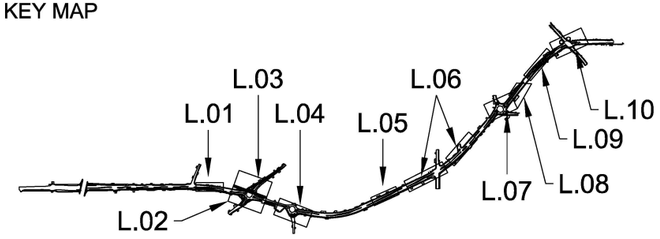

LEGEND

- SODDING, SALT TOLERANT
- SHREDDED BARK MULCH 4"
- STAMPED COLORED PORTLAND CEMENT CONCRETE MEDIAN SURFACE, SIDEWALK, OR CROSSWALK
- SHADE TREE
- SHRUB
- GRASS
- PERENNIAL

0 20 40 60
SCALE IN FEET

L.09

HRG PROJECT NO.: $PROJECTNO$
HRG PROJ.CONTACT: $HRGPM$
FILE NAME: D:\2017-sht-Land-00.dgn
PLOT DRIVER: PLT_DRV
PEN TABLE: PEN_TABLE

HRGreen.com
Illinois Professional Design Firm
184-001322

USER NAME = mzuzzio	DESIGNED - JFR	REVISED -
	DRAWN - JFR	REVISED -
PLOT SCALE = 40.0000 ' / in.	CHECKED - JTK	REVISED -
PLOT DATE = 02/06/2025	DATE -	REVISED -

STATE OF ILLINOIS
DEPARTMENT OF TRANSPORTATION

STREETSCAPE PLAN
IL ROUTE 47

SCALE: 1"=20' | SHEET 9 OF 11 SHEETS | STA. | TO STA.

F.A.P RTE.	SECTION NO.	COUNTY	TOTAL SHEETS	SHEET NO.
326	2024-1052-N, C, SW, FL	McHENRY	941	695
		CONTRACT NO. 62X94		
FED. ROAD DIST. NO.	ILLINOIS	FED. AID PROJECT		

PR EASEMENT

IL 120

66

IL ROUTE 47

204

203

202

201

67

PR ℄ IL ROUTE 47

EX ROW

1200+00

STAMP CLRD XWALK 9 ¾"

68

PR EASEMENT

1199

PR ROW

69

1198

N

0 20 40 60

SCALE IN FEET

KEY MAP

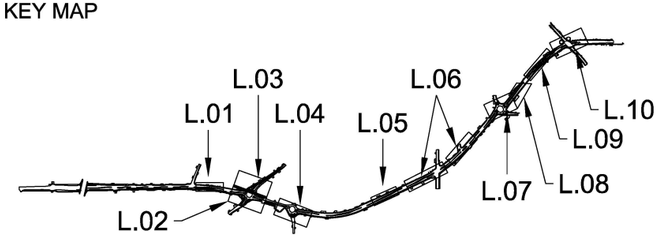

LEGEND

SODDING, SALT TOLERANT		SHADE TREE	
SHREDDED BARK MULCH 4"		SHRUB	
STAMPED COLORED PORTLAND CEMENT CONCRETE MEDIAN SURFACE, SIDEWALK, OR CROSSWALK		GRASS	
		PERENNIAL	

L.10

HRG PROJECT NO.: $PROJECTNO$
HRG PROJ. CONTACT: $HRGPM$
FILE NAME: D:\GDOT\7-sht-Land-2.dgn
PLOT DRIVER: PLT_DRV
PEN TABLE: PEN_TABLE

HRGreen.com
Illinois Professional Design Firm
184-001322

USER NAME = mzuzzio	DESIGNED - JFR	REVISED -
	DRAWN - JFR	REVISED -
PLOT SCALE = 40.0000 ' / in.	CHECKED - JTK	REVISED -
PLOT DATE = 02/06/2025	DATE -	REVISED -

STATE OF ILLINOIS
DEPARTMENT OF TRANSPORTATION

STREETSCAPE PLAN
IL ROUTE 47

SCALE: 1"=20' | SHEET 10 OF 11 SHEETS | STA. | TO STA.

F.A.P RTE.	SECTION NO.	COUNTY	TOTAL SHEETS	SHEET NO.
326	2024-1052-N, C, SW, FL	McHENRY	941	696
		CONTRACT NO. 62X94		
FED. ROAD DIST. NO.	ILLINOIS	FED. AID PROJECT		

PLANT SCHEDULE

SYMBOL	CODE	QTY	BOTANICAL / COMMON NAME	PLANTING SIZE	
DECIDUOUS TREES					
	AF	3	ACER X FREEMANII 'CELZAM' TM CELEBRATION FREEMAN MAPLE	2.5" CAL.	
	AM	3	AMELANCHIER CANADENSIS SHADBLOW SERVICEBERRY	2" CAL.	
	GT	9	GLEDITSIA TRIACANTHOS INERMIS 'SKYCOLE' TM SKYLINE HONEY LOCUST	2.5" CAL.	
	UF	17	ULMUS X 'FRONTIER' FRONTIER ELM	2.5" CAL.	
SYMBOL	CODE	QTY	BOTANICAL / COMMON NAME	SIZE	SPACING
DECIDUOUS SHRUBS					
	BP	12	BUDDLEJA X `SMNBDBT` PUGSTER BLUE® DWARF BUTTERFLY BUSH	5 GAL.	48" o.c.
	CP	80	CERATOSTIGMA PLUMBAGINOIDES DWARF PLUMBAGO	5 GAL.	18" o.c.
	PO	25	PHYSOCARPUS OPULIFOLIUS 'LITTLE DEVIL' TM DWARF NINEBARK	5 GAL.	48" o.c.
	TB	113	THUJA OCCIDENTALIS 'BOBOZAM' TM MR. BOWLING BALL ARBORVITAE	5 GAL.	24" o.c.
EVERGREEN SHRUBS					
	JM	205	JUNIPERUS SABINA 'MONARD' TM MOOR-DENSE JUNIPER	5 GAL.	60" o.c.
GRASSES					
	CL	434	CHASMANTHIUM LATIFOLIUM NORTHERN SEA OATS	1 GAL.	24" o.c.
	PM	33	PENNISETUM ALOPECUROIDES 'MOUDRY' MOUDRY FOUNTAIN GRASS	1 GAL.	36" o.c.
	SA	157	SESLERIA AUTUMNALIS AUTUMN MOOR GRASS	1 GAL.	24" o.c.
	SH	263	SPOROBOLUS HETEROLEPIS PRAIRIE DROPSEED	1 GAL.	24" o.c.
PERENNIALS					
	AL	178	ALLIUM LUSITANICUM 'SUMMER BEAUTY' SUMMER BEAUTY ORNAMENTAL ONION	1 GAL.	18" o.c.
	EP	201	ECHINACEA PURPUREA CONEFLOWER	1 GAL.	18" o.c.
	HS	84	HEMEROCALLIS X 'STELLA DE ORO' STELLA DE ORO DAYLILY	1 GAL.	18" o.c.
	HO	152	HEUCHERA X 'OBSIDIAN' OBSIDIAN CORAL BELLS	1 GAL.	18" o.c.
	NF	230	NEPETA X FAASSENII 'WALKER'S LOW' WALKER'S LOW CATMINT	1 GAL.	18" o.c.
	RF	117	RUDBECKIA FULGIDA SULLIVANTII 'LITTLE GOLDSTAR' BLACK-EYED SUSAN	1 GAL.	18" o.c.
	SB	281	SEDUM X 'BLACK BEAUTY' BLACK BEAUTY SEDUM	1 GAL.	18" o.c.

L.11

HRG PROJECT NO.: $PROJECTNO$
HRG PROJ. CONTACT: $HRGPM$
FILE NAME: D160X17-sht-Land-ll.dgn
PLOT DRIVER: PLT_DRV
PEN TABLE: PEN_TABLE

HRGreen.com
Illinois Professional Design Firm
184-001322

USER NAME = mzuzzio	DESIGNED - JFR	REVISED -	STATE OF ILLINOIS DEPARTMENT OF TRANSPORTATION
	DRAWN - JFR	REVISED -	
PLOT SCALE = 40.0000 ' / in.	CHECKED - JTK	REVISED -	
PLOT DATE = 02/06/2025	DATE -	REVISED -	

STREETSCAPE PLAN
IL ROUTE 47

SCALE: 1"=20' | SHEET 10 OF 11 SHEETS | STA. TO STA.

F.A.P RTE.	SECTION NO.	COUNTY	TOTAL SHEETS	SHEET NO.
326	2024-1052-N, C, SW, FL	McHENRY	941	697
		CONTRACT NO. 62X94		

FED. ROAD DIST. NO. | ILLINOIS | FED. AID PROJECT

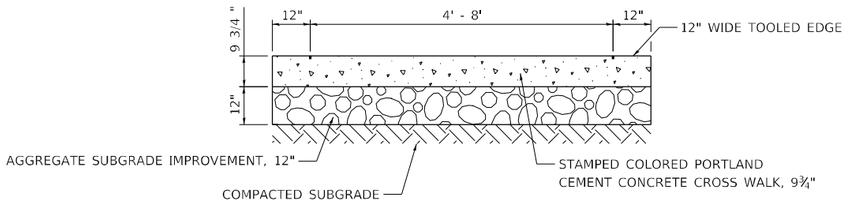

STAMPED COLORED PORTLAND CEMENT CONCRETE CROSS WALK

NOTE:
SHALL INCLUDE HERRINGBONE BRICK PATTERN AND THE
COLOR SHALL BE 2.5YR2/8 FROM THE MUNSELL COLOR CHART

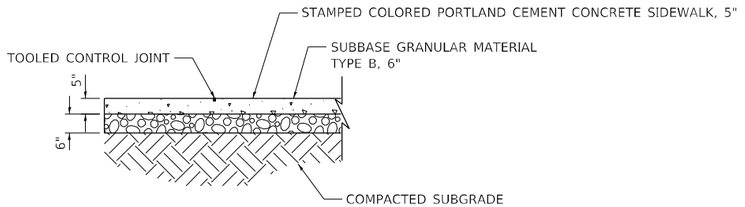

STAMPED COLORED PORTLAND CEMENT CONCRETE SIDEWALK, 5 INCH

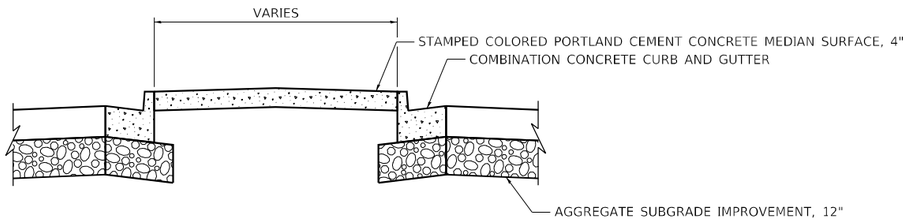

STAMPED COLORED PORTLAND CEMENT CONCRETE MEDIAN SURFACE, 4"

L.12

HRG PROJECT NO.: $PROJECTNO$
HRG PROJ. CONTACT: $HRGPM$
FILE NAME: DIGOXIT-sht-Details-01.dgn
PLOT DRIVER: PLT_DRV
PEN TABLE: PEN_TABLE

HRGreen.com
Illinois Professional Design Firm
184-001322

USER NAME = mzuzzio	DESIGNED - TEH	REVISED -	STATE OF ILLINOIS DEPARTMENT OF TRANSPORTATION
	DRAWN - WJH	REVISED -	
PLOT SCALE = 2.0000 ' / in.	CHECKED - JTK	REVISED -	
PLOT DATE = 2/06/2025	DATE -	REVISED -	

STREETSCAPE PLAN
IL ROUTE 47

SCALE: N/A | SHEET 11 OF 11 SHEETS | STA. TO STA.

F.A.P. RTE.	SECTION	COUNTY	TOTAL SHEETS	SHEET NO.
326	2024-1052-N, C, SW, FL	McHENRY	941	698

CONTRACT NO. 62X94

ILLINOIS FED. AID PROJECT

IRRIGATION LEGEND

SYMBOL	DESCRIPTION
▲ ▲ ▲	MP ROTATOR SPRINKLER: HUNTER PROS-12-PRS40-CV MP1000 NOZZLE PRESSURE: 40 PSI RADIUS: 10-14 FEET FLOW (GPM): Q - 0.19 H - 0.37 F - 0.75 6"POP UP HEIGHT Precip. rate (in/hr): 0.40
▲ ▲ ▲	MP ROTATOR SPRINKLER: HUNTER PROS-12-PRS40-CV MP3000 NOZZLE PRESSURE: 40 PSI RADIUS: 22-30 FEET FLOW (GPM): Q - 0.86 H - 1.82 F - 3.64 6"POP UP HEIGHT Precip. rate (in/hr): 0.40
▲ ▲ ▲	SPRAY SPRINKLER: HUNTER PROS-06-PRS30-CV W/ 5' TORO PRECISION SPRAY NOZ PRESSURE: 30 PSI RADIUS: 5 FEET FLOW (GPM): Q - 0.06 H - 0.13 F - 0.26 Precip. rate (in/hr): 1.2
● ⊖ ⊕	SPRAY SPRINKLER: HUNTER PROS-06-PRS30-CV W/ 8' TORO PRECISION SPRAY NOZ PRESSURE: 30 PSI RADIUS: 8 FEET FLOW (GPM): Q - 0.17 H - 0.33 F - 0.66 Precip. rate (in/hr): 1.2
◆ ■ ■	SPRAY SPRINKLER: HUNTER PROS-06-PRS30-CV W/ 10' TORO PRECISION SPRAY NOZ PRESSURE: 30 PSI RADIUS: 10 FEET FLOW (GPM): Q - 0.23 H - 0.51 F - 1.03 Precip. rate (in/hr): 1.2
	BACKFLOW PREVENTER: 3/4" FEBCO 825YA REFER TO DETAILS.
	ZONE CONTROL VALVE: HUNTER ICV SIZE AS NOTED
	DRIP CONTROL VALVE ASSEMBLY: HUNTER ICZ DRIP ZONE KIT 1" VALVE
QC	QUICK COUPLER: RAINBIRD 44LRC
	GATE VALVE - RESILIENT WEDGE, SQUARE NUT TOP, LINE SIZE
	EMITTER LATERAL PIPE: UV RADIATION RESISTANT POLYETHYLENE, 1" SIZE (ROUTING IS DIAGRAMMATIC) INSTALL CHECK VALVE IN LINE ON DRIP LATERAL EVERY 10' OF ELEVATION DIFFERENCES THAT ARE MORE THAN 10' IN ONE ZONE.
	DRIP FLUSH PLUG ASSEMBLY
	MAINLINE PIPE: 1 1/2" BELL END CLASS 200 PVC WITH GLUED FITTINGS.
	LATERAL PIPE TO SPRINKLERS: CLASS 200 PVC (1-INCH UNLESS OTHERWISE NOTED) NOTE ALL 1" AND 1½" LATERAL PIPES FEEDING SPRINKLER HEADS THROUGH SLEEVES RUN TO PULL BOXES ARE TO BE POLYETHYLENE AND BE CONTINUOUS RUNS BETWEEN PULL BOXES, NO FITTINGS ALLOWED IN SLEEVES ONLY IN PULL BOXES IF NECESSARY.
	UNCONNECTED PIPE CROSSING
	UNCONNECTED PIPE CROSSING, TWO DIFFERENT PIPES
	P.O.C. - POINT OF CONNECTION
	CLASS 200 PVC SLEEVING, 4" UNLESS OTHERWISE NOTED
A1 15 1"	A1 — INDICATES CONTROLLER AND CONTROLLER STATION NUMBER 15 — INDICATES LATERAL DISCHARGE IN GPM 1" — INDICATES REMOTE CONTROL VALVE SIZE IN INCHES
ⒶⒷⒸⒹ	NEW HUNTER ACC2 TWO WIRE 225 STATION CONTROLLERS IN PLASTIC PEDESTAL ENCLOSURE. MODEL # A2C-225-PP. INSTALL GROUNDING AT CONTROLLER AND ALONG TWO WIRE PATH AS REQUIRED PER HUNTER SPECIFICATIONS. USE 1 STATION HUNTER DECODERS FOR EACH SINGLE VALVE MODEL # ICD-100, INSTALL PER HUNTER SPECIFICATIONS. INSTALL GROUNDING ALONG MAINLINE PATH AND AT CONTROLLER PER HUNTER REQUIREMENTS. CONTRACTOR TO PROVIDE SHOP DRAWINGS FOR ALL FINAL EQUIPMENT AND INSTALLATION DETAILS PRE HUNTER SPECIFICATIONS.
PB	PULL BOX FOR LONG SLEEVE RUNS. STUB SLEEVES INTO JUMBO VALVE BOXES INSTALL AS SHOWN ON PLANS FOR LONG SLEEVE RUNS INSTALL PULL ROPE IN EACH SLEEVE FOR PULLING PIPES.
MV	HUNTER 1 1/2" MASTER VALVE MODEL# ICV 1 1/2"
FS	HUNTER 1" FLOW SENSOR MODEL# FTC-100
SS	HUNTER WIRELESS SOLAR SYNC MODEL # WSS-SEN

IRRIGATION NOTES

1. Irrigation system is designed to operate off of an existing pressure of 80 psi after water meter and backflow preventer. Contractor to verify pressure PRIOR TO INSTALLATION and notify OWNER of any differences. Design pressure at heads to be as noted in legend.
2. No irrigation work to begin until final grade has been approved.
3. Locate all heads 6" min. from any wall, walk, or curb, and 12" min. from any curb adjacent to parking stalls.
4. Bury all mainlines 24" underground to top of pipe. Bury all laterals 12"" underground to top of pipe.
5. Pipes in shared trenches are not allowed.
6. Brand all appropriate box lids with 1" minimum letters with the following abbreviations:
   - QC Quick Coupler
   - GV Gate Valve
   - SV# Section Valve & Corresponding Controller Station #
   - FC Drip Flush Cap
7. All pipe under pavement to be sleeved in 4" minimum PVC class 200 extend 12" beyond each edge of pavement, sloped to drain. Install prior to paving. Sleeve wires separately in 4" min. pipe.
8. All valve wire is to be 14 gauge direct burial Paige 2-wire. All wire splices shall be done with 3M DBR/Y wire splices.
9. Heads will be diagrammatic. Contractor to select and install correct arcs as needed for part circle heads. Adjust radii and arc as necessary for no overspray/backwash onto adjacent buildings, walls, or fences.
10. Plan has been prepared using limited on-site observation. Plan is diagrammatic and does not reflect all equipment, etc., that could be encountered during construction. All tie locations, mainline locations and lateral locations are approximate and shall require exact location by Contractor.
11. Install drip emitters as described below:

1 gallon material	Rain Bird XB-05PC	1 ea.
5 gallon material	Rain Bird XB-10PC	2 ea.
Deciduous Trees (1-1/2"-2 1/2")	Rain Bird XB-20PC	4 ea.
Deciduous Trees (3"-4" CAL.)	Rain Bird XB-20PC	6 ea.
Evergreen Trees (6'-10')	Rain Bird XB-20PC	4 ea.
Evergreen Trees (11'-14')	Rain Bird XB-20PC	6 ea.

12. See sheet 12.0 and 12.1 for irrigation details.
13. Install drip rings at all trees in native seed areas per detail 1/12.1.

HRG PROJECT NO.: $PROJECTNO$
HRG PROJ. CONTACT: $HRGPM$
FILE NAME: D:\2024\2024-1052-n_c_sw_fl\irrigation\irrigation-02.dgn
PLOT DRIVER: PLT_DRV
PEN TABLE: PEN_TABLE

Munding Design, LLC
Irrigation Design and Landscape Architecture
302 E. Geneseo St.
Lafayette, Colorado 80026
720-273-3884

USER NAME = mzuzzio	DESIGNED - JFR	REVISED -
	DRAWN - JFR	REVISED -
PLOT SCALE = 44.0000 ' / in.	CHECKED - JTK	REVISED -
PLOT DATE = 2/6/2025	DATE -	REVISED -

STATE OF ILLINOIS
DEPARTMENT OF TRANSPORTATION

PROPOSED IRRIGATION PLAN
IL ROUTE 47

SCALE: N/A | SHEET 1 OF 10 SHEETS | STA. | TO STA.

F.A.P RTE.	SECTION NO.	COUNTY	TOTAL SHEETS	SHEET NO.
326	2024-1052-N, C, SW, FL	McHENRY	941	699
		CONTRACT NO. 62X94		
FED. ROAD DIST. NO.	ILLINOIS	FED. AID PROJECT		

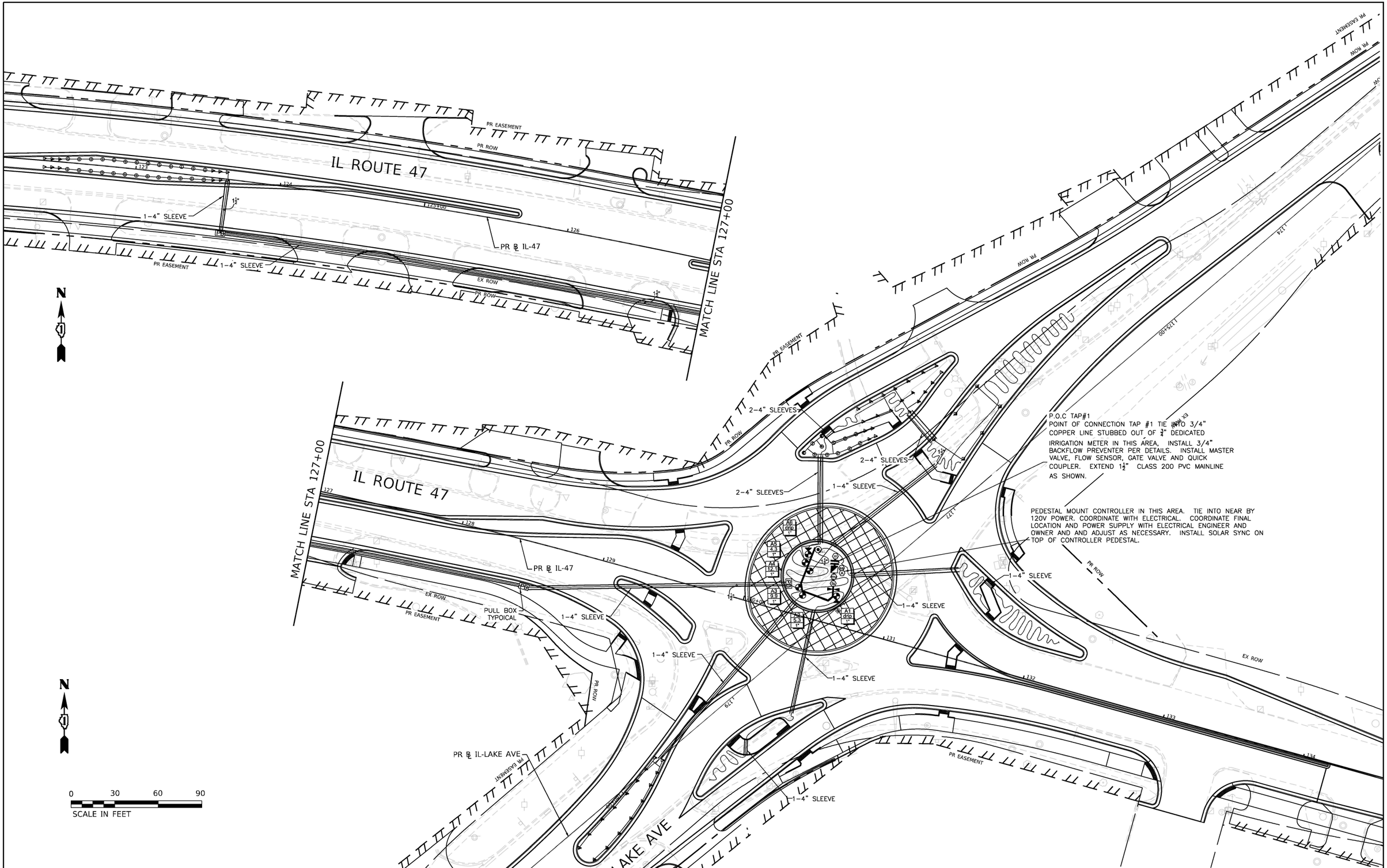

HRG PROJECT NO.: $PROJECTNO$
HRG PROJ. CONTACT: $HRGPM$
FILE NAME: DI6OXI7-sht-irrigation-03.dgn
PLOT DRIVER: PLT_DRV
PEN TABLE: PEN_TABLE

Munding Design, LLC Irrigation Design and Landscape Architecture 302 E. Geneseo St. Lafayette, Colorado 80026 720-273-3884	USER NAME = mzuzzio	DESIGNED - JFR	REVISED -
		DRAWN - JFR	REVISED -
	PLOT SCALE = 60.0000 ' / in.	CHECKED - JTK	REVISED -
	PLOT DATE = 2/6/2025	DATE -	REVISED -

STATE OF ILLINOIS
DEPARTMENT OF TRANSPORTATION

PROPOSED IRRIGATION PLAN – TAP #1
IL ROUTE 47

SCALE: 1"=30' | SHEET 2 OF 10 SHEETS | STA. TO STA.

F.A.P RTE.	SECTION NO.	COUNTY	TOTAL SHEETS	SHEET NO.
326	2024-1052-N, C, SW, FL	McHENRY	941	700
		CONTRACT NO. 62X94		
FED. ROAD DIST. NO.	ILLINOIS	FED. AID PROJECT		