NOTE:

1) ALL FIBER OPTIC JUMP CABLES SHALL BE LC-LC CONNECTOR TYPE UNLESS APPROVED BY THE ENGINEER. NO ADAPTERS OR CONVERSION DEVICES WILL BE ALLOWED.

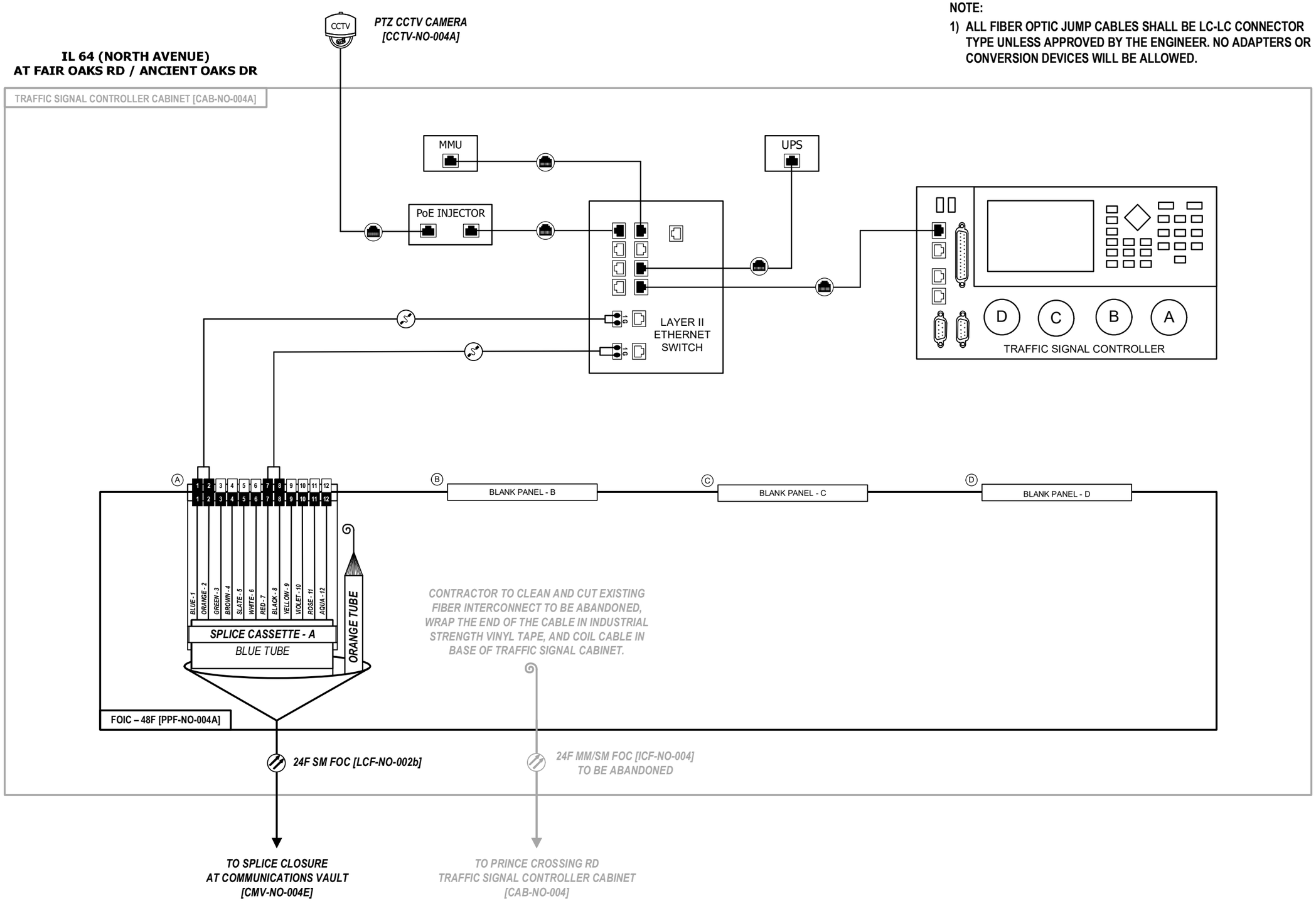


D108121-ahb-comm-visio

Kimley»Horn

| | | |
|---|---|---|
| USER NAME = | DESIGNED - | REVISED - |
| | DRAWN - | REVISED - |
| PLOT SCALE = N.T.S. | CHECKED - | REVISED - |
| PLOT DATE = | DATE - | REVISED - |

STATE OF ILLINOIS
DEPARTMENT OF TRANSPORTATION

FIBER SPLICING AND CABINET CONNECTION DETAILS
TRAFFIC SIGNAL CONTROLLER CABINET [CAB-NO-004A]

SCALE: SHEET OF SHEETS STA. TO STA.

| F.A.P. RTE. | SECTION | COUNTY | TOTAL SHEETS | SHEET NO. |
|---|---|---|---|---|
| 307 | 2020-263-SUR,SW&TS | DUPAGE | 529 | 401 |
| | | CONTRACT NO. 62N33 | | |

ILLINOIS FED. AID PROJECT

NOTE:

1) ALL FIBER OPTIC JUMP CABLES SHALL BE LC-LC CONNECTOR TYPE UNLESS APPROVED BY THE ENGINEER. NO ADAPTERS OR CONVERSION DEVICES WILL BE ALLOWED.

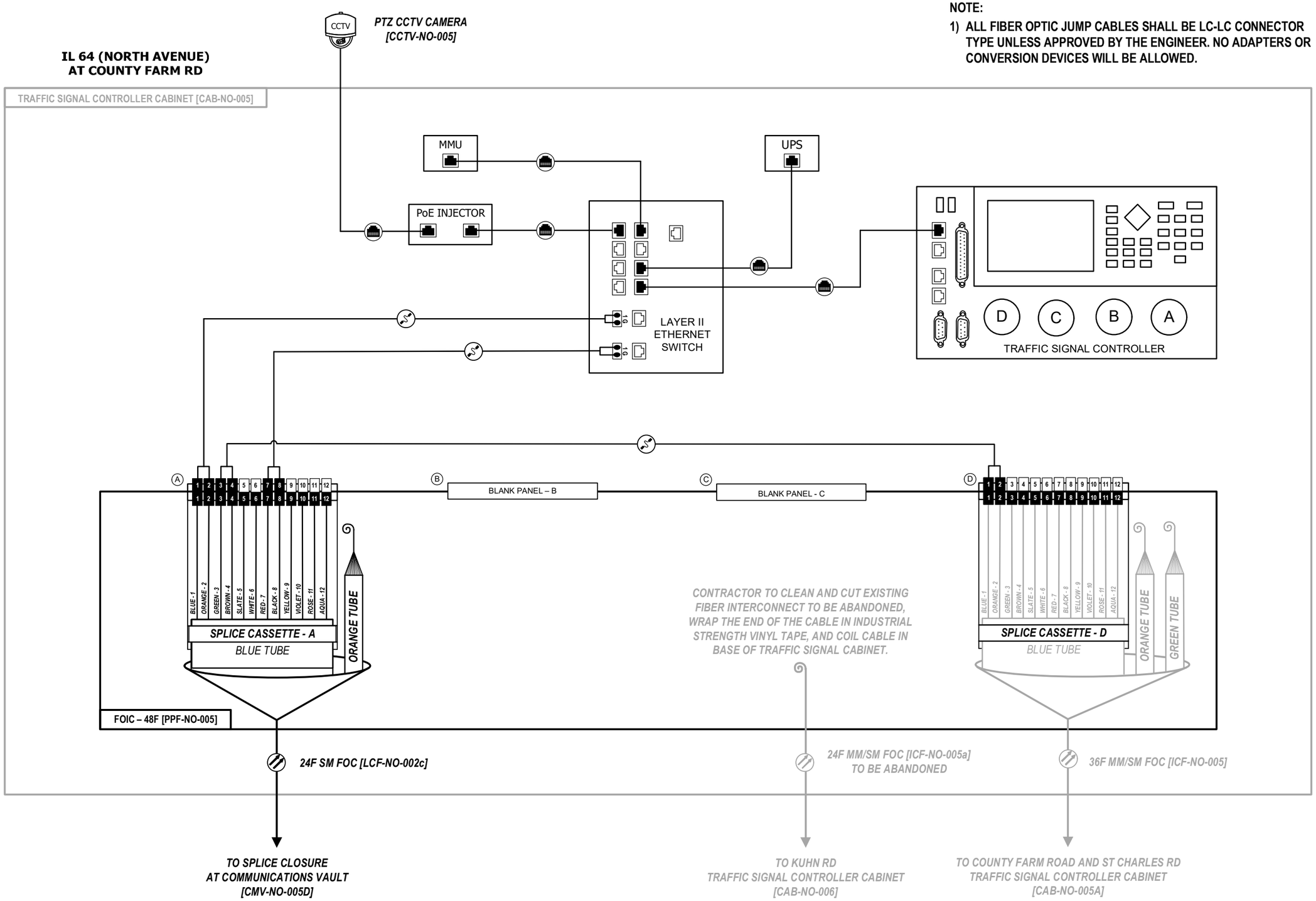


D108121-sht-comm.visio

Kimley»Horn

| | | |
|---|---|---|
| USER NAME = | DESIGNED - | REVISED - |
| | DRAWN - | REVISED - |
| PLOT SCALE = N.T.S. | CHECKED - | REVISED - |
| PLOT DATE = | DATE - | REVISED - |

STATE OF ILLINOIS
DEPARTMENT OF TRANSPORTATION

FIBER SPLICING AND CABINET CONNECTION DETAILS
TRAFFIC SIGNAL CONTROLLER CABINET [CAB-NO-005]

SCALE: SHEET OF SHEETS STA. TO STA.

| F.A.P. RTE. | SECTION | COUNTY | TOTAL SHEETS | SHEET NO. |
|---|---|---|---|---|
| 307 | 2020-263-SUR,SW&TS | DUPAGE | 529 | 402 |
| | | CONTRACT NO. 62N33 | | |

ILLINOIS FED. AID PROJECT

NOTE:

1) ALL FIBER OPTIC JUMP CABLES SHALL BE LC-LC CONNECTOR TYPE UNLESS APPROVED BY THE ENGINEER. NO ADAPTERS OR CONVERSION DEVICES WILL BE ALLOWED.

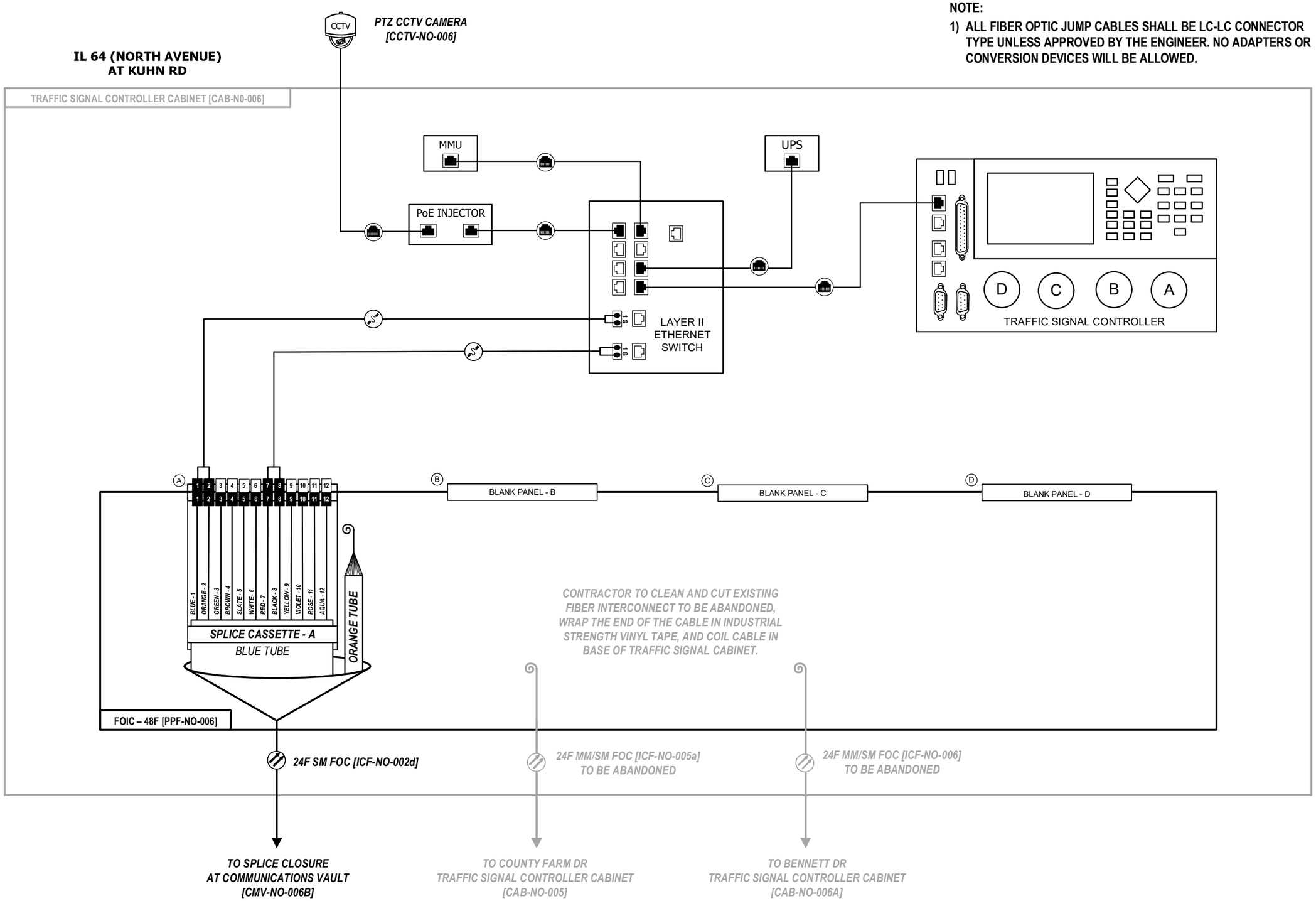


D108121-elt-comm-visio

Kimley»Horn

| | | |
|---|---|---|
| USER NAME = | DESIGNED - | REVISED - |
| | DRAWN - | REVISED - |
| PLOT SCALE = N.T.S. | CHECKED - | REVISED - |
| PLOT DATE = | DATE - | REVISED - |

**STATE OF ILLINOIS**
**DEPARTMENT OF TRANSPORTATION**

**FIBER SPLICING AND CABINET CONNECTION DETAILS**
**TRAFFIC SIGNAL CONTROLLER CABINET [CAB-NO-006]**

SCALE: SHEET OF SHEETS STA. TO STA.

| F.A.P. RTE. | SECTION | COUNTY | TOTAL SHEETS | SHEET NO. |
|---|---|---|---|---|
| 307 | 2020-263-SUR,SW&TS | DUPAGE | 529 | 403 |
| | | CONTRACT NO. 62N33 | | |

ILLINOIS FED. AID PROJECT

NOTE:

1) ALL FIBER OPTIC JUMP CABLES SHALL BE LC-LC CONNECTOR TYPE UNLESS APPROVED BY THE ENGINEER. NO ADAPTERS OR CONVERSION DEVICES WILL BE ALLOWED.

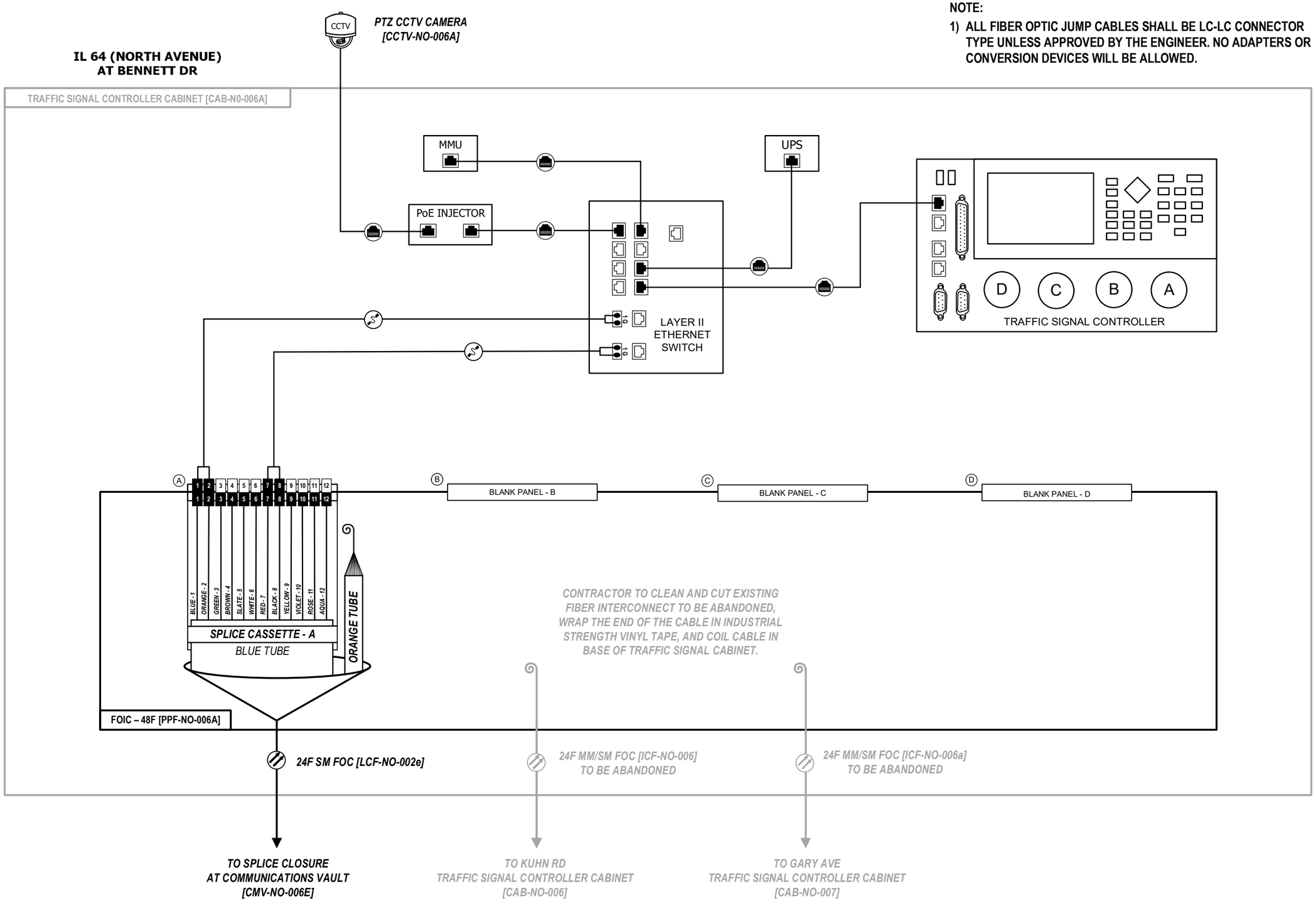


D108121-ahb-comm-visio

Kimley»Horn

| | | |
|---|---|---|
| USER NAME = | DESIGNED - | REVISED - |
| | DRAWN - | REVISED - |
| PLOT SCALE = N.T.S. | CHECKED - | REVISED - |
| PLOT DATE = | DATE - | REVISED - |

STATE OF ILLINOIS
DEPARTMENT OF TRANSPORTATION

FIBER SPLICING AND CABINET CONNECTION DETAILS
TRAFFIC SIGNAL CONTROLLER CABINET [CAB-NO-006A]

SCALE: SHEET OF SHEETS STA. TO STA.

| F.A.P. RTE. | SECTION | COUNTY | TOTAL SHEETS | SHEET NO. |
|---|---|---|---|---|
| 307 | 2020-263-SUR,SW&TS | DUPAGE | 529 | 404 |
| | | CONTRACT NO. 62N33 | | |

ILLINOIS FED. AID PROJECT

NOTE:

1) ALL FIBER OPTIC JUMP CABLES SHALL BE LC-LC CONNECTOR TYPE UNLESS APPROVED BY THE ENGINEER. NO ADAPTERS OR CONVERSION DEVICES WILL BE ALLOWED.

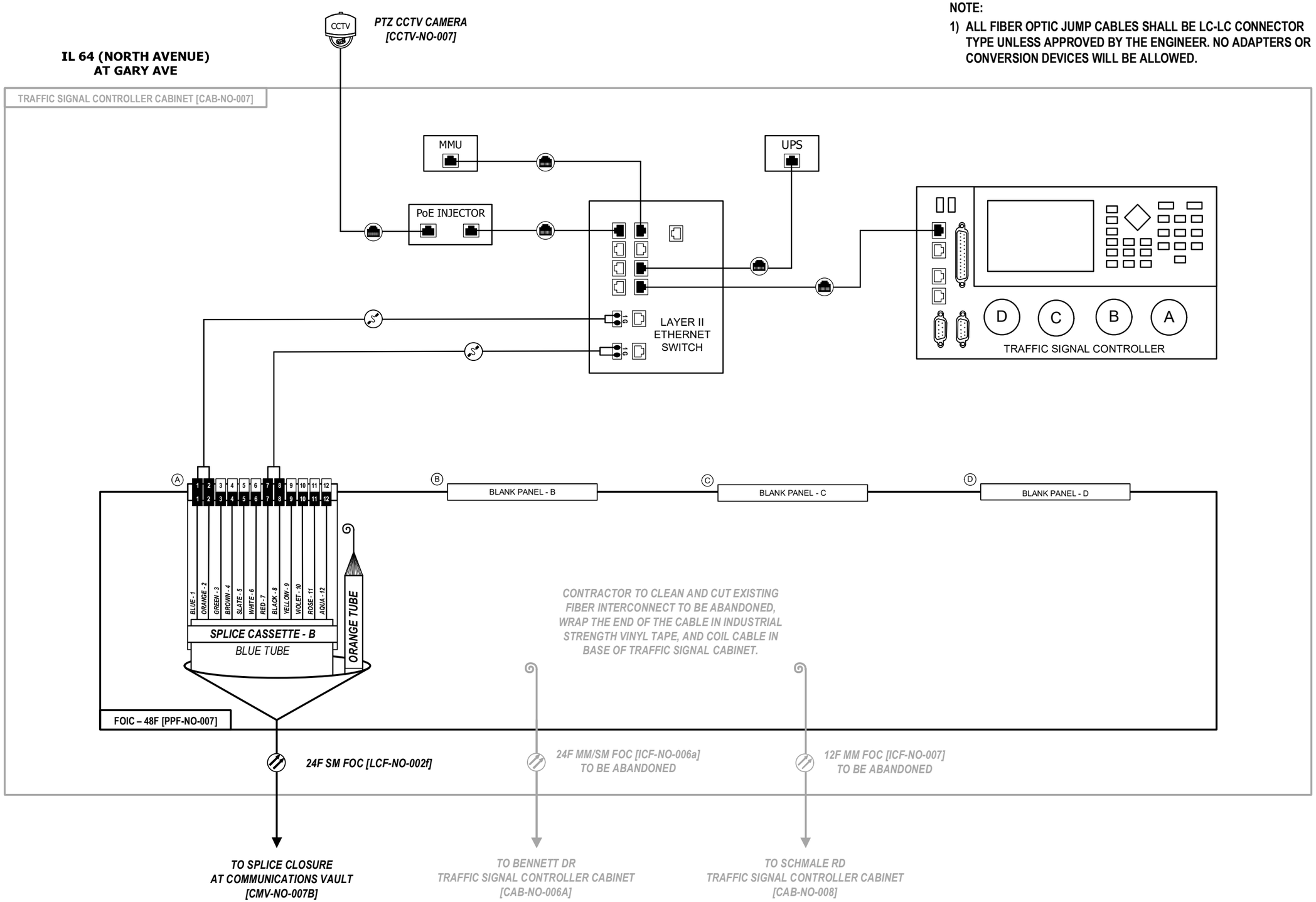


D108121-elt-comm-visio

Kimley»Horn

| | | |
|---|---|---|
| USER NAME = | DESIGNED - | REVISED - |
| | DRAWN - | REVISED - |
| PLOT SCALE = N.T.S. | CHECKED - | REVISED - |
| PLOT DATE = | DATE - | REVISED - |

STATE OF ILLINOIS
DEPARTMENT OF TRANSPORTATION

FIBER SPLICING AND CABINET CONNECTION DETAILS
TRAFFIC SIGNAL CONTROLLER CABINET [CAB-NO-007]

SCALE: SHEET OF SHEETS STA. TO STA.

| F.A.P. RTE. | SECTION | COUNTY | TOTAL SHEETS | SHEET NO. |
|---|---|---|---|---|
| 307 | 2020-263-SUR,SW&TS | DUPAGE | 529 | 405 |
| | | CONTRACT NO. 62N33 | | |

ILLINOIS FED. AID PROJECT

NOTE:

1) ALL FIBER OPTIC JUMP CABLES SHALL BE LC-LC CONNECTOR TYPE UNLESS APPROVED BY THE ENGINEER. NO ADAPTERS OR CONVERSION DEVICES WILL BE ALLOWED.

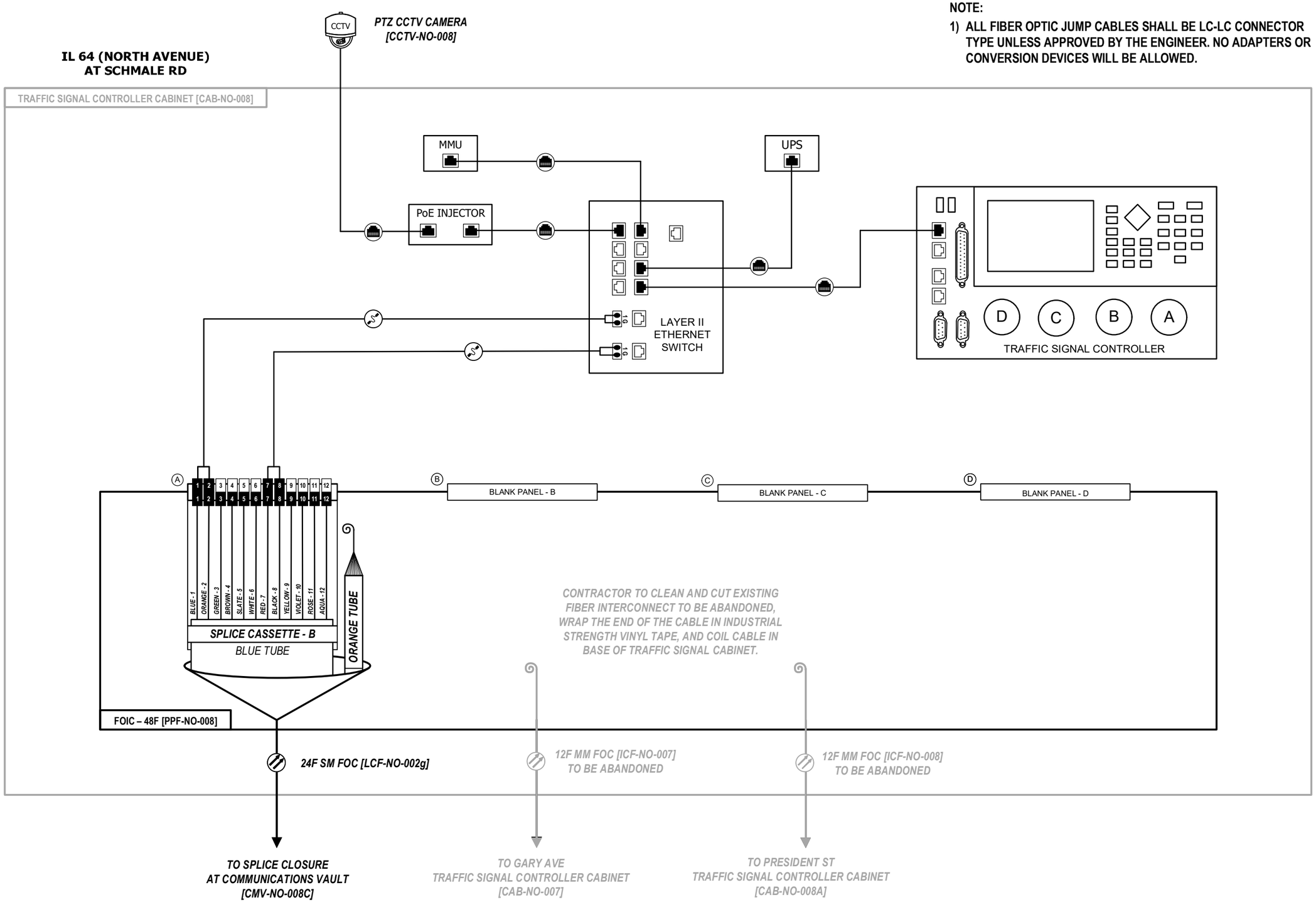


D108121-elt-comm-visio

Kimley»Horn

| | | |
|---|---|---|
| USER NAME = | DESIGNED - | REVISED - |
| | DRAWN - | REVISED - |
| PLOT SCALE = N.T.S. | CHECKED - | REVISED - |
| PLOT DATE = | DATE - | REVISED - |

**STATE OF ILLINOIS**
**DEPARTMENT OF TRANSPORTATION**

**FIBER SPLICING AND CABINET CONNECTION DETAILS**
**TRAFFIC SIGNAL CONTROLLER CABINET [CAB-NO-008]**

SCALE: SHEET OF SHEETS STA. TO STA.

| F.A.P. RTE. | SECTION | COUNTY | TOTAL SHEETS | SHEET NO. |
|---|---|---|---|---|
| 307 | 2020-263-SUR,SW&TS | DUPAGE | 529 | 406 |
| | | CONTRACT NO. 62N33 | | |

ILLINOIS FED. AID PROJECT

NOTE:

1) ALL FIBER OPTIC JUMP CABLES SHALL BE LC-LC CONNECTOR TYPE UNLESS APPROVED BY THE ENGINEER. NO ADAPTERS OR CONVERSION DEVICES WILL BE ALLOWED.

**IL 64 (NORTH AVENUE)**
**AT PRESIDENT ST**

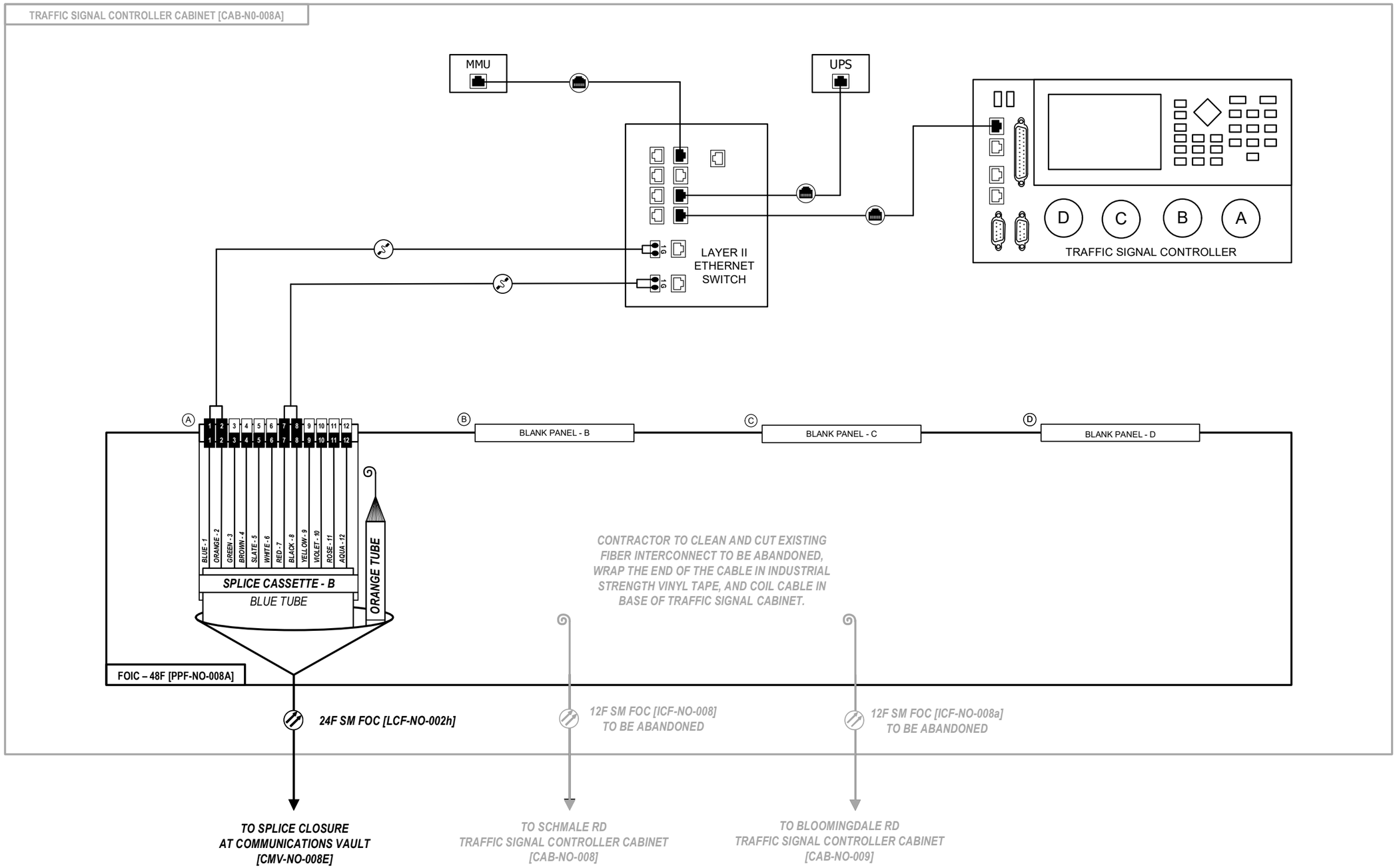


D108121-elt-comm-visio

Kimley»Horn

| | | |
|---|---|---|
| USER NAME = | DESIGNED - | REVISED - |
| | DRAWN - | REVISED - |
| PLOT SCALE = N.T.S. | CHECKED - | REVISED - |
| PLOT DATE = | DATE - | REVISED - |

**STATE OF ILLINOIS**
**DEPARTMENT OF TRANSPORTATION**

**FIBER SPLICING AND CABINET CONNECTION DETAILS**
**TRAFFIC SIGNAL CONTROLLER CABINET [CAB-NO-008A]**

SCALE: SHEET OF SHEETS STA. TO STA.

| F.A.P. RTE. | SECTION | COUNTY | TOTAL SHEETS | SHEET NO. |
|---|---|---|---|---|
| 307 | 2020-263-SUR,SW&TS | DUPAGE | 529 | 407 |
| | | CONTRACT NO. 62N33 | | |

ILLINOIS FED. AID PROJECT

NOTE:

1) ALL FIBER OPTIC JUMP CABLES SHALL BE LC-LC CONNECTOR TYPE UNLESS APPROVED BY THE ENGINEER. NO ADAPTERS OR CONVERSION DEVICES WILL BE ALLOWED.

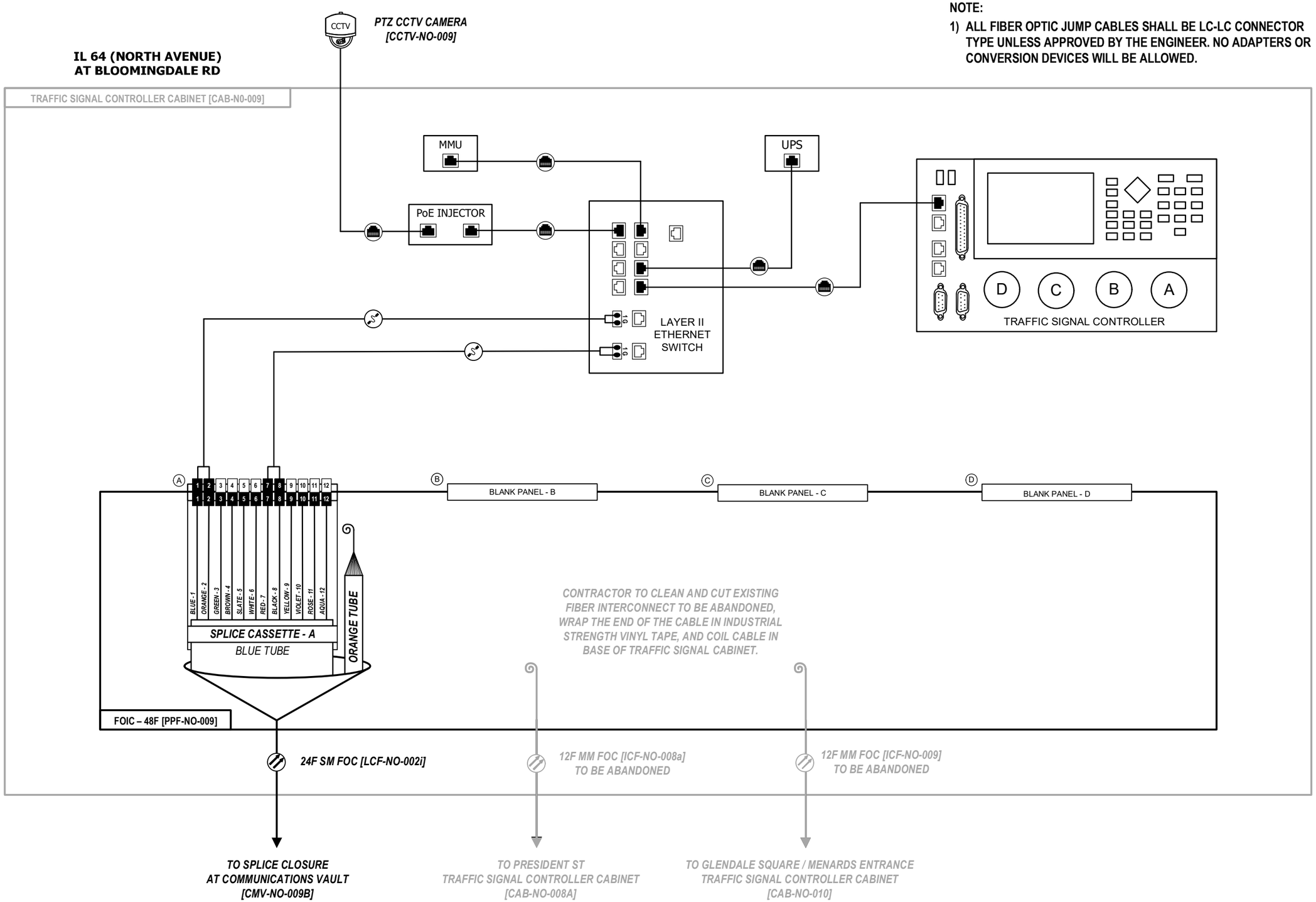


D108121-ahb-comm-visio

Kimley»Horn

| | | |
|---|---|---|
| USER NAME = | DESIGNED - | REVISED - |
| | DRAWN - | REVISED - |
| PLOT SCALE = N.T.S. | CHECKED - | REVISED - |
| PLOT DATE = | DATE - | REVISED - |

**STATE OF ILLINOIS**
**DEPARTMENT OF TRANSPORTATION**

**FIBER SPLICING AND CABINET CONNECTION DETAILS**
**TRAFFIC SIGNAL CONTROLLER CABINET [CAB-NO-009]**

SCALE: SHEET OF SHEETS STA. TO STA.

| F.A.P. RTE. | SECTION | COUNTY | TOTAL SHEETS | SHEET NO. |
|---|---|---|---|---|
| 307 | 2020-263-SUR,SW&TS | DUPAGE | 529 | 408 |
| | | CONTRACT NO. 62N33 | | |

ILLINOIS FED. AID PROJECT

NOTE:

1) ALL FIBER OPTIC JUMP CABLES SHALL BE LC-LC CONNECTOR TYPE UNLESS APPROVED BY THE ENGINEER. NO ADAPTERS OR CONVERSION DEVICES WILL BE ALLOWED.

**IL 64 (NORTH AVENUE)**
**AT GLENDALE SQUARE / MENARDS ENTRANCE**

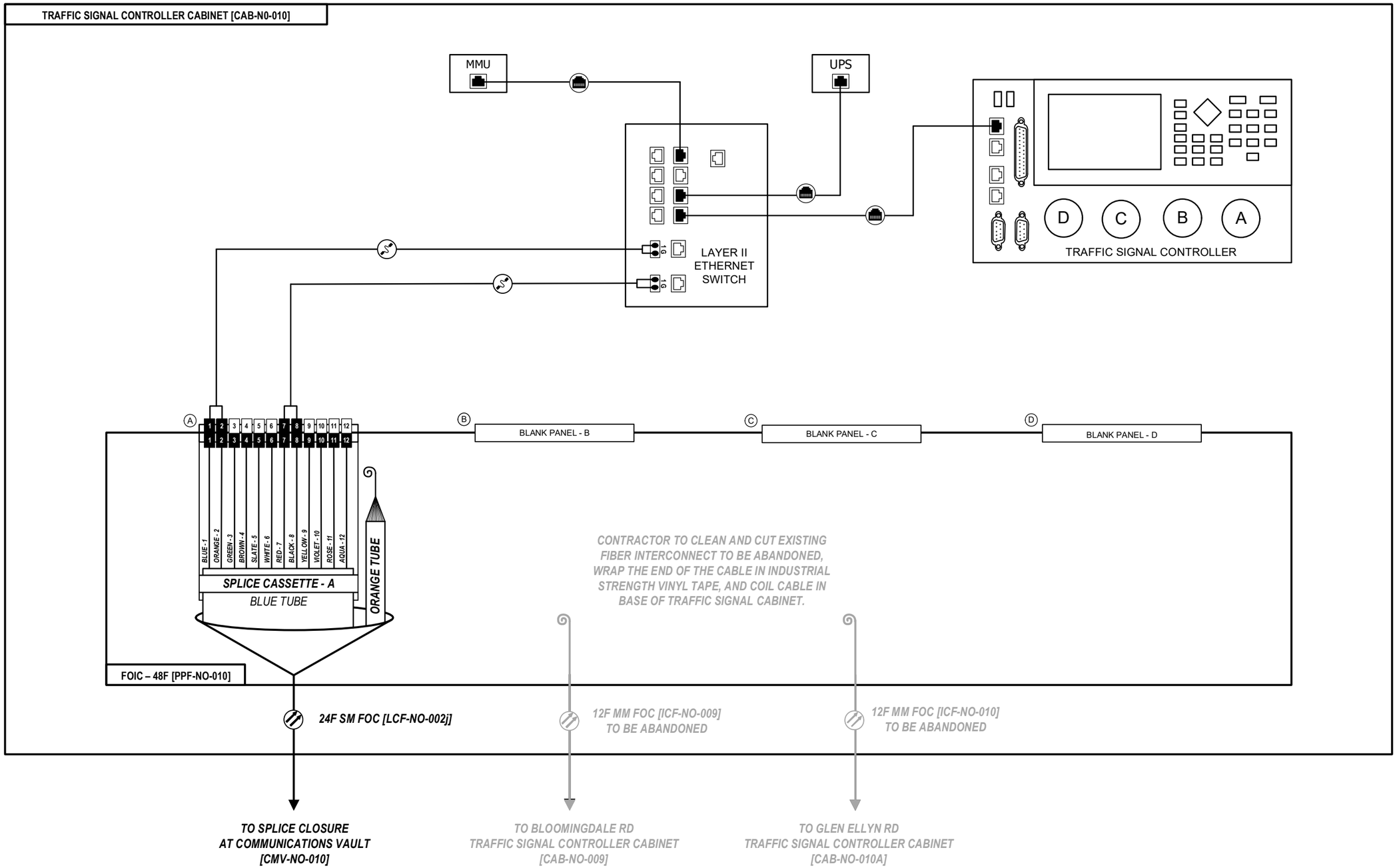


D108121-elt-comm-visio

Kimley»Horn

| | | |
|---|---|---|
| USER NAME = | DESIGNED - | REVISED - |
| | DRAWN - | REVISED - |
| PLOT SCALE = N.T.S. | CHECKED - | REVISED - |
| PLOT DATE = | DATE - | REVISED - |

**STATE OF ILLINOIS**
**DEPARTMENT OF TRANSPORTATION**

**FIBER SPLICING AND CABINET CONNECTION DETAILS**
**TRAFFIC SIGNAL CONTROLLER CABINET [CAB-NO-010]**

SCALE: SHEET OF SHEETS STA. TO STA.

| F.A.P. RTE. | SECTION | COUNTY | TOTAL SHEETS | SHEET NO. |
|---|---|---|---|---|
| 307 | 2020-263-SUR,SW&TS | DUPAGE | 529 | 409 |
| | | CONTRACT NO. 62N33 | | |

ILLINOIS FED. AID PROJECT

NOTE:

1) ALL FIBER OPTIC JUMP CABLES SHALL BE LC-LC CONNECTOR TYPE UNLESS APPROVED BY THE ENGINEER. NO ADAPTERS OR CONVERSION DEVICES WILL BE ALLOWED.

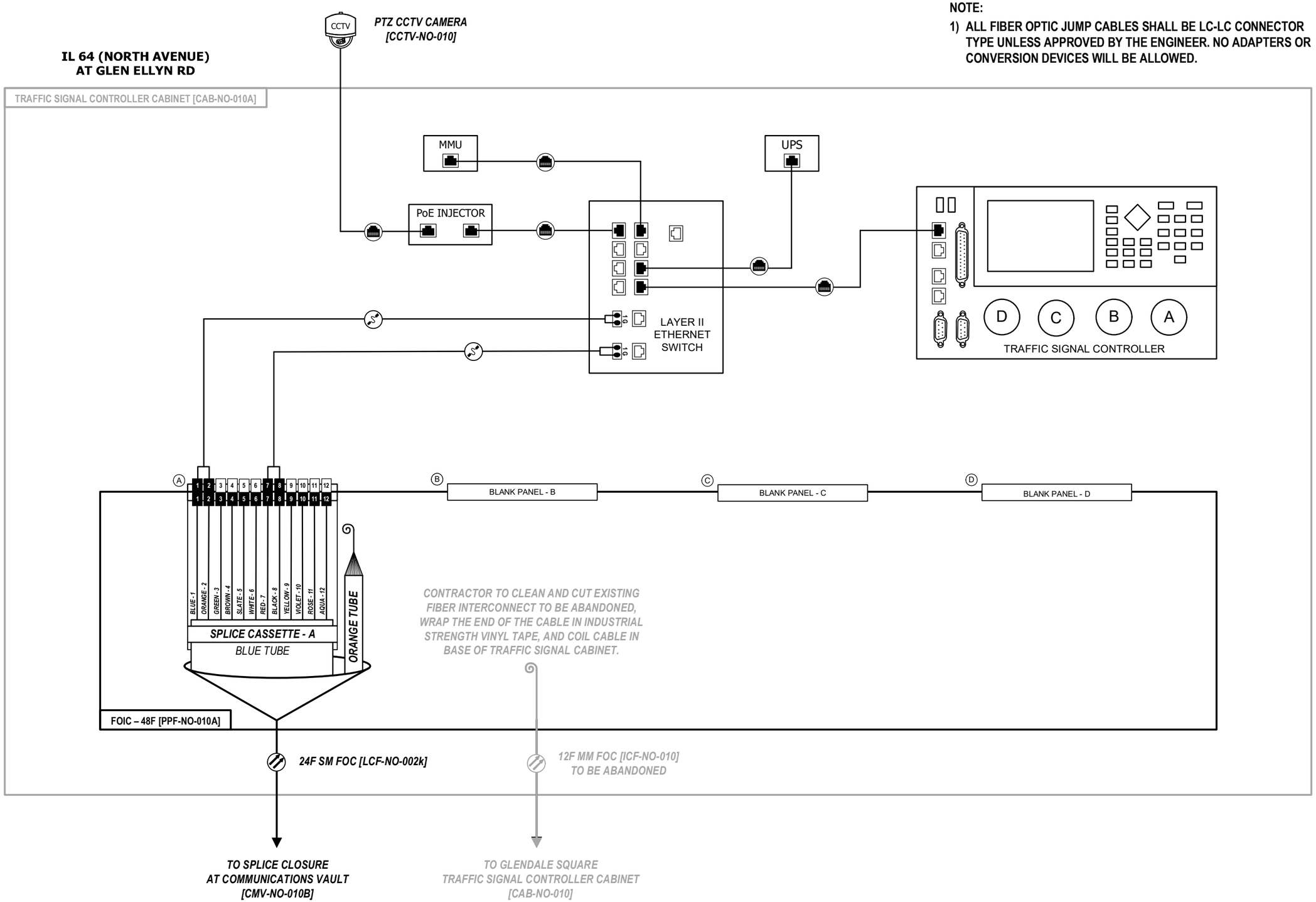


D108121-ahk-comm-visio

Kimley»Horn

| | | |
|---|---|---|
| USER NAME = | DESIGNED - | REVISED - |
| | DRAWN - | REVISED - |
| PLOT SCALE = N.T.S. | CHECKED - | REVISED - |
| PLOT DATE = | DATE - | REVISED - |

STATE OF ILLINOIS
DEPARTMENT OF TRANSPORTATION

FIBER SPLICING AND CABINET CONNECTION DETAILS
TRAFFIC SIGNAL CONTROLLER CABINET [CAB-NO-010A]

SCALE: SHEET OF SHEETS STA. TO STA.

| F.A.P. RTE. | SECTION | COUNTY | TOTAL SHEETS | SHEET NO. |
|---|---|---|---|---|
| 307 | 2020-263-SUR,SW&TS | DUPAGE | 529 | 410 |
| | | CONTRACT NO. 62N33 | | |
| | ILLINOIS | FED. AID PROJECT | | |

NOTE:

1) ALL FIBER OPTIC JUMP CABLES SHALL BE LC-LC CONNECTOR TYPE UNLESS APPROVED BY THE ENGINEER. NO ADAPTERS OR CONVERSION DEVICES WILL BE ALLOWED.

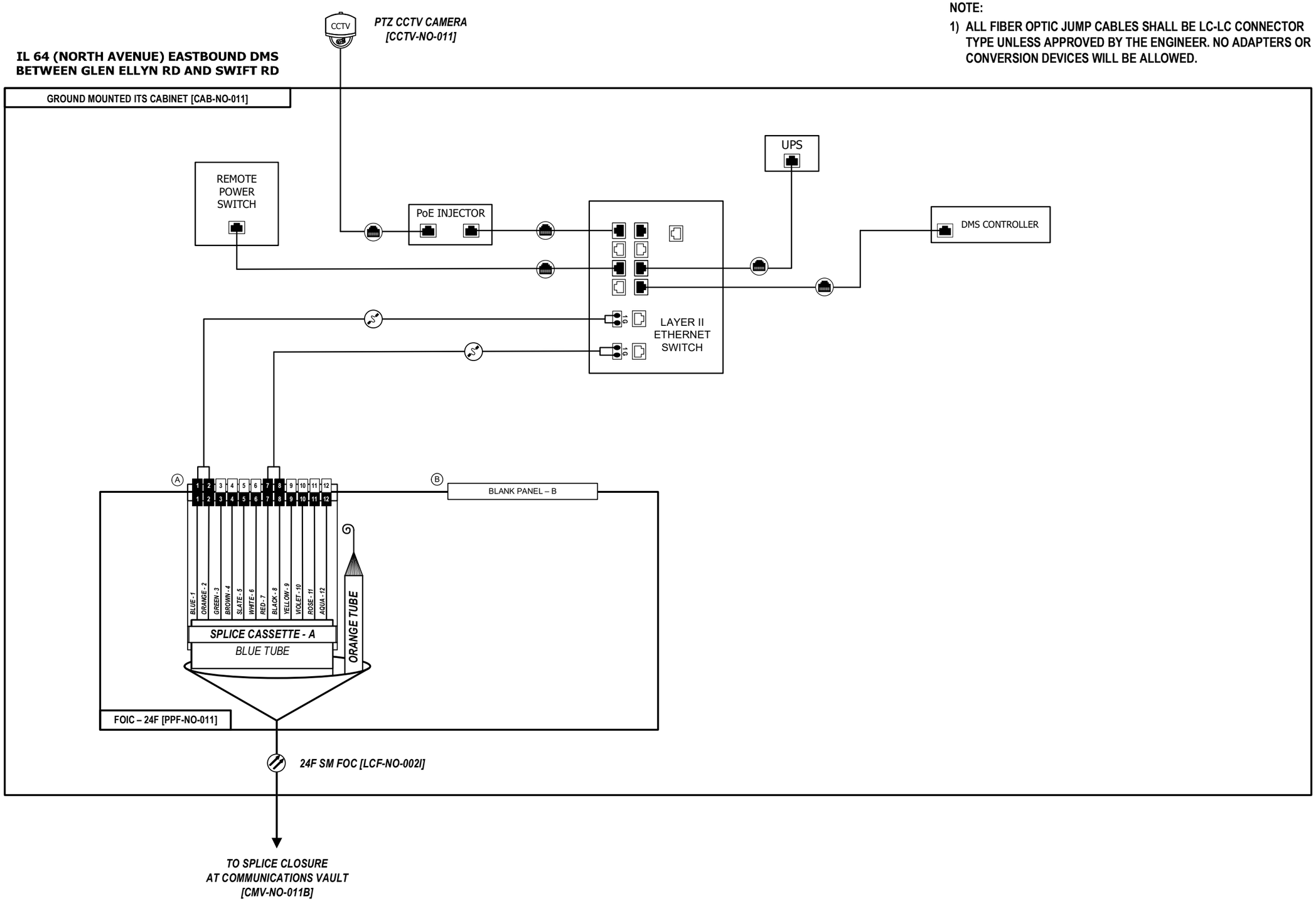


D108121-elt-comm-visio

Kimley»Horn

| | | |
|---|---|---|
| USER NAME = | DESIGNED - | REVISED - |
| | DRAWN - | REVISED - |
| PLOT SCALE = N.T.S. | CHECKED - | REVISED - |
| PLOT DATE = | DATE - | REVISED - |

**STATE OF ILLINOIS**
**DEPARTMENT OF TRANSPORTATION**

**FIBER SPLICING AND CABINET CONNECTION DETAILS**
**GROUND MOUNTED ITS CABINET [CAB-NO-011]**

SCALE: SHEET OF SHEETS STA. TO STA.

| F.A.P. RTE. | SECTION | COUNTY | TOTAL SHEETS | SHEET NO. |
|---|---|---|---|---|
| 307 | 2020-263-SUR,SW&TS | DUPAGE | 529 | 411 |
| | | CONTRACT NO. 62N33 | | |

ILLINOIS FED. AID PROJECT

NOTE:

1) ALL FIBER OPTIC JUMP CABLES SHALL BE LC-LC CONNECTOR TYPE UNLESS APPROVED BY THE ENGINEER. NO ADAPTERS OR CONVERSION DEVICES WILL BE ALLOWED.

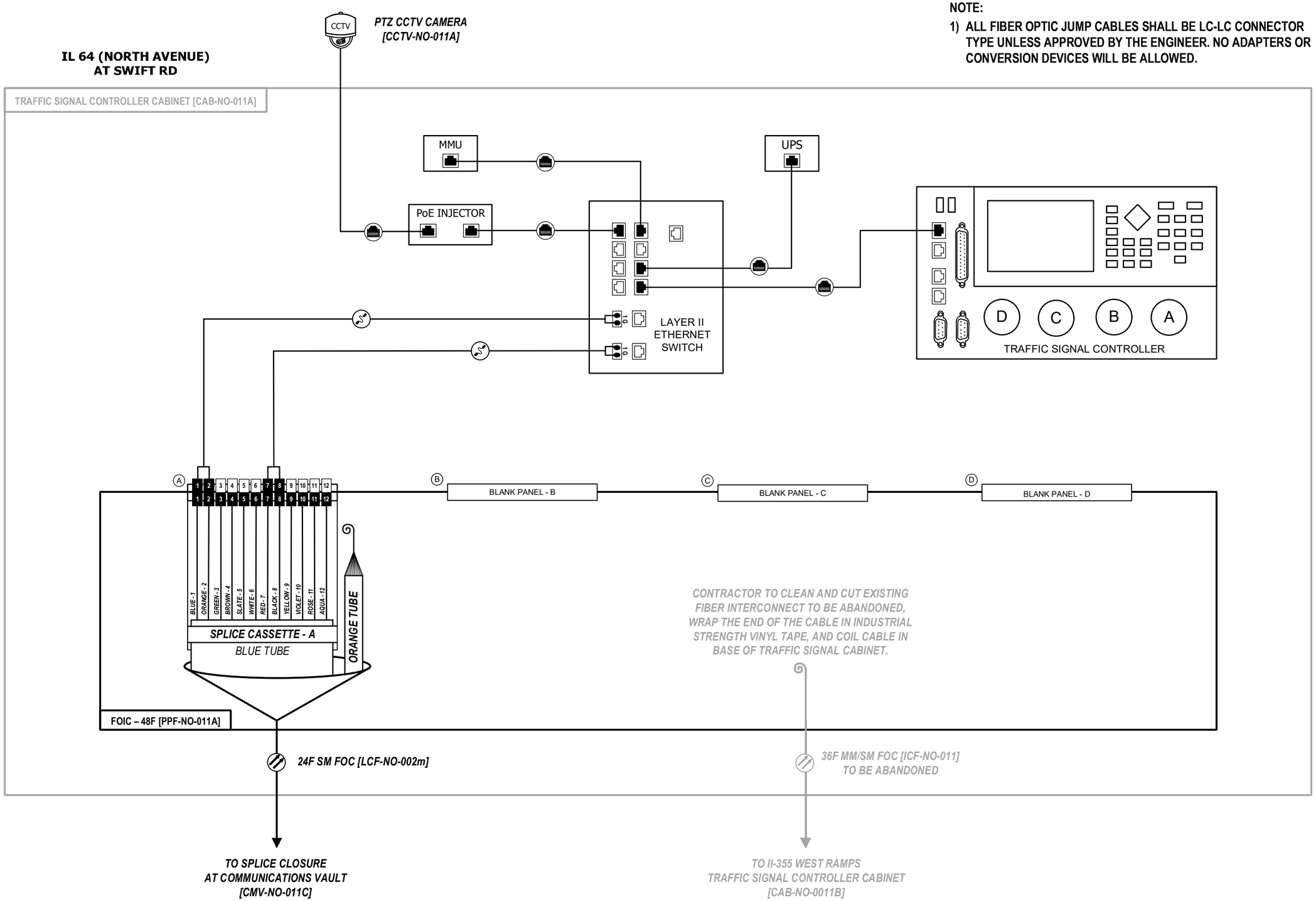


D108121-ahl-comm.visio

Kimley»Horn

| | | |
|---|---|---|
| USER NAME = | DESIGNED - | REVISED - |
| | DRAWN - | REVISED - |
| PLOT SCALE = N.T.S. | CHECKED - | REVISED - |
| PLOT DATE = | DATE - | REVISED - |

STATE OF ILLINOIS
DEPARTMENT OF TRANSPORTATION

FIBER SPLICING AND CABINET CONNECTION DETAILS
TRAFFIC SIGNAL CONTROLLER CABINET [CAB-NO-011A]

SCALE: SHEET OF SHEETS STA. TO STA.

| F.A.P. RTE. | SECTION | COUNTY | TOTAL SHEETS | SHEET NO. |
|---|---|---|---|---|
| 307 | 2020-263-SUR,SW&TS | DUPAGE | 529 | 412 |
| | | CONTRACT NO. 62N33 | | |

ILLINOIS FED. AID PROJECT

NOTE:

1) ALL FIBER OPTIC JUMP CABLES SHALL BE LC-LC CONNECTOR TYPE UNLESS APPROVED BY THE ENGINEER. NO ADAPTERS OR CONVERSION DEVICES WILL BE ALLOWED.

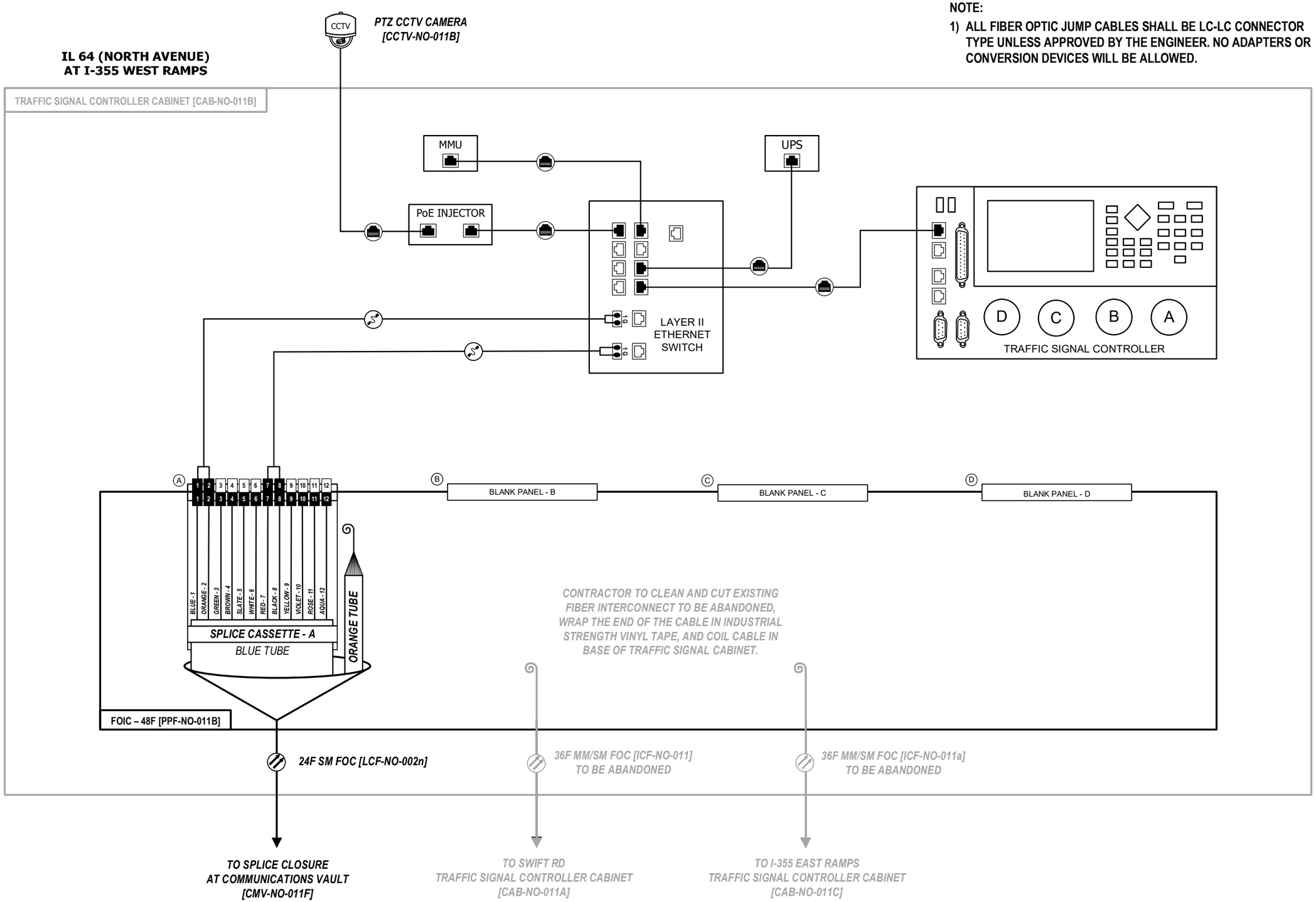


D108121-elt-comm-visio

Kimley»Horn

| | | |
|---|---|---|
| USER NAME = | DESIGNED - | REVISED - |
| | DRAWN - | REVISED - |
| PLOT SCALE = N.T.S. | CHECKED - | REVISED - |
| PLOT DATE = | DATE - | REVISED - |

STATE OF ILLINOIS
DEPARTMENT OF TRANSPORTATION

FIBER SPLICING AND CABINET CONNECTION DETAILS
TRAFFIC SIGNAL CONTROLLER CABINET [CAB-NO-011B]

SCALE: SHEET OF SHEETS STA. TO STA.

| F.A.P. RTE. | SECTION | COUNTY | TOTAL SHEETS | SHEET NO. |
|---|---|---|---|---|
| 307 | 2020-263-SUR,SW&TS | DUPAGE | 529 | 413 |
| | | CONTRACT NO. 62N33 | | |

ILLINOIS FED. AID PROJECT

NOTE:

1) ALL FIBER OPTIC JUMP CABLES SHALL BE LC-LC CONNECTOR TYPE UNLESS APPROVED BY THE ENGINEER. NO ADAPTERS OR CONVERSION DEVICES WILL BE ALLOWED.

**IL 64 (NORTH AVENUE)**
**AT I-355 EAST RAMPS**

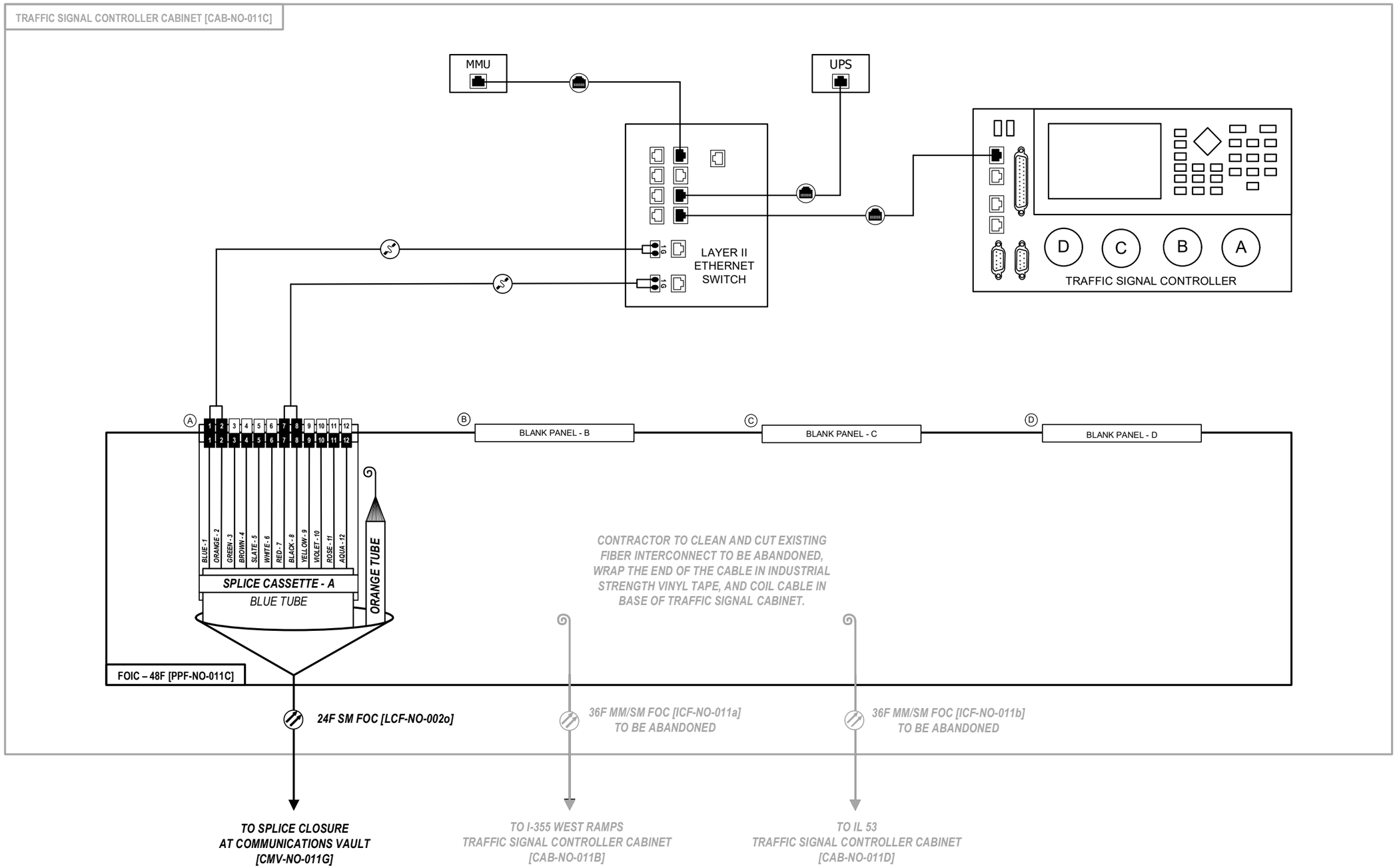


D108121-elt-comm-visio

Kimley»Horn

| | | |
|---|---|---|
| USER NAME = | DESIGNED - | REVISED - |
| | DRAWN - | REVISED - |
| PLOT SCALE = N.T.S. | CHECKED - | REVISED - |
| PLOT DATE = | DATE - | REVISED - |

**STATE OF ILLINOIS**
**DEPARTMENT OF TRANSPORTATION**

**FIBER SPLICING AND CABINET CONNECTION DETAILS**
**TRAFFIC SIGNAL CONTROLLER CABINET [CAB-NO-011C]**

SCALE: SHEET OF SHEETS STA. TO STA.

| F.A.P. RTE. | SECTION | COUNTY | TOTAL SHEETS | SHEET NO. |
|---|---|---|---|---|
| 307 | 2020-263-SUR,SW&TS | DUPAGE | 529 | 414 |
| | | CONTRACT NO. 62N33 | | |

ILLINOIS FED. AID PROJECT

NOTE:

1) ALL FIBER OPTIC JUMP CABLES SHALL BE LC-LC CONNECTOR TYPE UNLESS APPROVED BY THE ENGINEER. NO ADAPTERS OR CONVERSION DEVICES WILL BE ALLOWED.

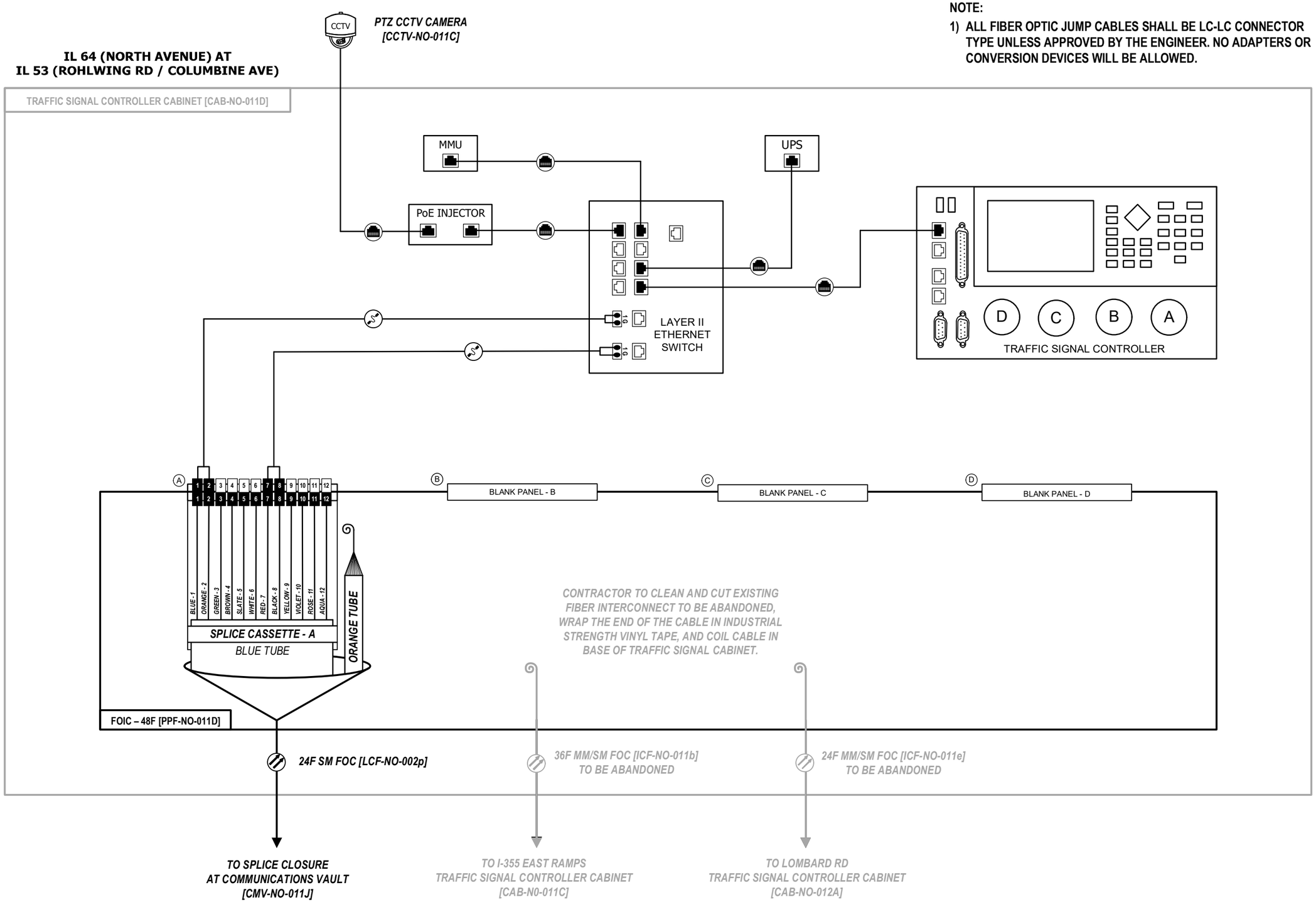


D108121-elt-comm-visio

Kimley»Horn

| | | |
|---|---|---|
| USER NAME = | DESIGNED - | REVISED - |
| | DRAWN - | REVISED - |
| PLOT SCALE = N.T.S. | CHECKED - | REVISED - |
| PLOT DATE = | DATE - | REVISED - |

STATE OF ILLINOIS
DEPARTMENT OF TRANSPORTATION

FIBER SPLICING AND CABINET CONNECTION DETAILS
TRAFFIC SIGNAL CONTROLLER CABINET [CAB-NO-011D]

SCALE: SHEET OF SHEETS STA. TO STA.

| F.A.P. RTE. | SECTION | COUNTY | TOTAL SHEETS | SHEET NO. |
|---|---|---|---|---|
| 307 | 2020-263-SUR,SW&TS | DUPAGE | 529 | 415 |
| | | CONTRACT NO. 62N33 | | |

ILLINOIS FED. AID PROJECT

## IL 64 (NORTH AVENUE) AT IL 53

IDOT COMMUNICATIONS NODE CABINET [CAB-NO-011E]

**NOTE:**

1) ALL FIBER OPTIC JUMP CABLES SHALL BE LC-LC CONNECTOR TYPE UNLESS APPROVED BY THE ENGINEER. NO ADAPTERS OR CONVERSION DEVICES WILL BE ALLOWED.

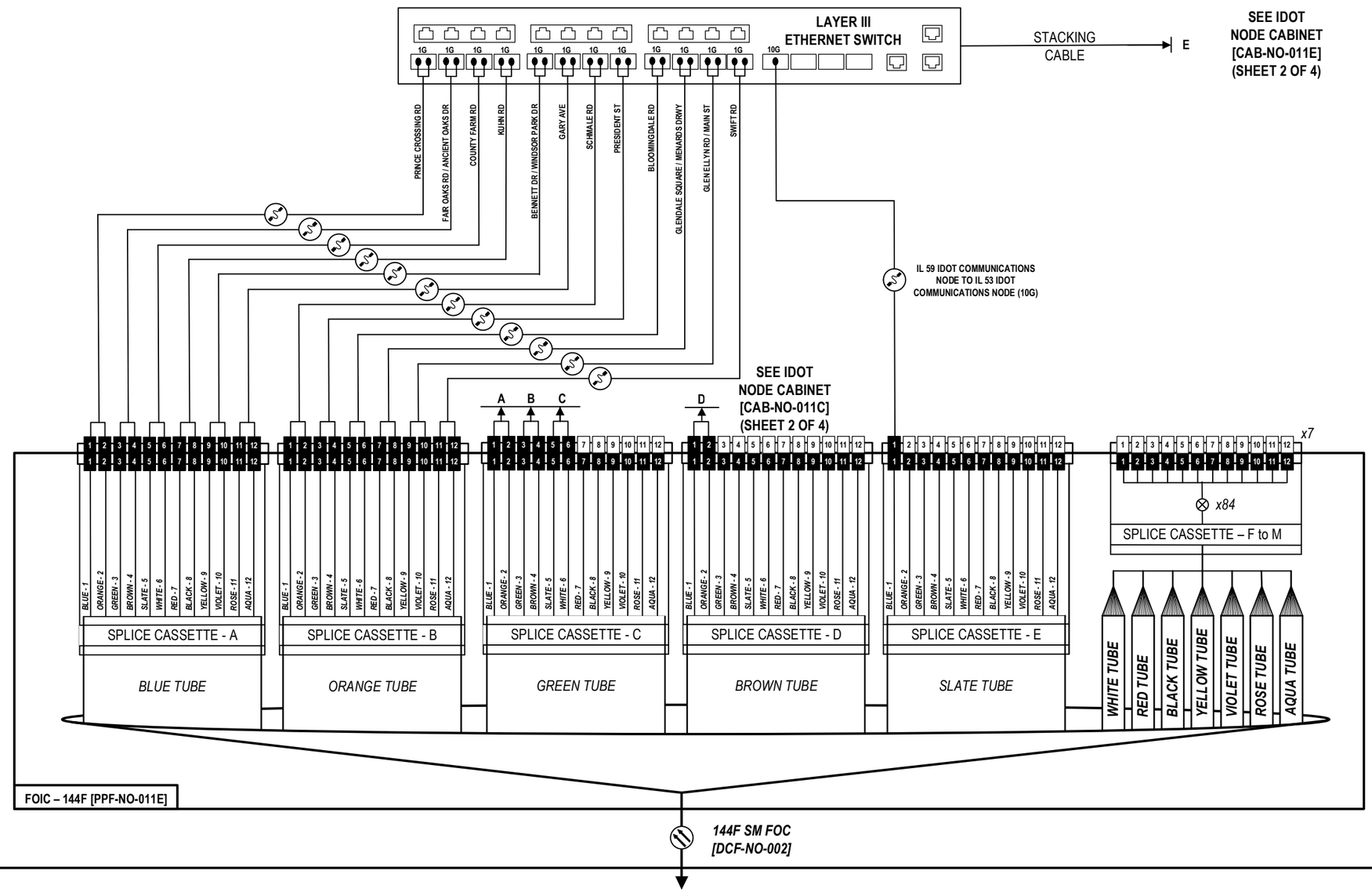


TOSCOMMUNICATIONS VAULT [CMV-NO-011J]

D108121-sht-comm-visio

| | | | | | | | | | | |
|---|---|---|---|---|---|---|---|---|---|---|
| Kimley»Horn | USER NAME = | DESIGNED - | REVISED - | STATE OF ILLINOIS DEPARTMENT OF TRANSPORTATION | FIBER SPLICING AND CABINET CONNECTION DETAILS IDOT NODE CABINET [CAB-NO-011E] (SHEET 1 OF 4) | F.A.P. RTE. | SECTION | COUNTY | TOTAL SHEETS | SHEET NO. |
| | | DRAWN - | REVISED - | | | 307 | 2020-263-SUR,SW&TS | DUPAGE | 529 | 416 |
| | PLOT SCALE = N.T.S. | CHECKED - | REVISED - | | | | | CONTRACT NO. 62N33 | | |
| | PLOT DATE = | DATE - | REVISED - | | SCALE: SHEET OF SHEETS STA. TO STA. | | ILLINOIS | FED. AID PROJECT | | |

## IL 64 (NORTH AVENUE) AT IL 53

IDOT COMMUNICATIONS NODE CABINET [CAB-NO-011E]

**NOTE:**

1) ALL FIBER OPTIC JUMP CABLES SHALL BE LC-LC CONNECTOR TYPE UNLESS APPROVED BY THE ENGINEER. NO ADAPTERS OR CONVERSION DEVICES WILL BE ALLOWED.

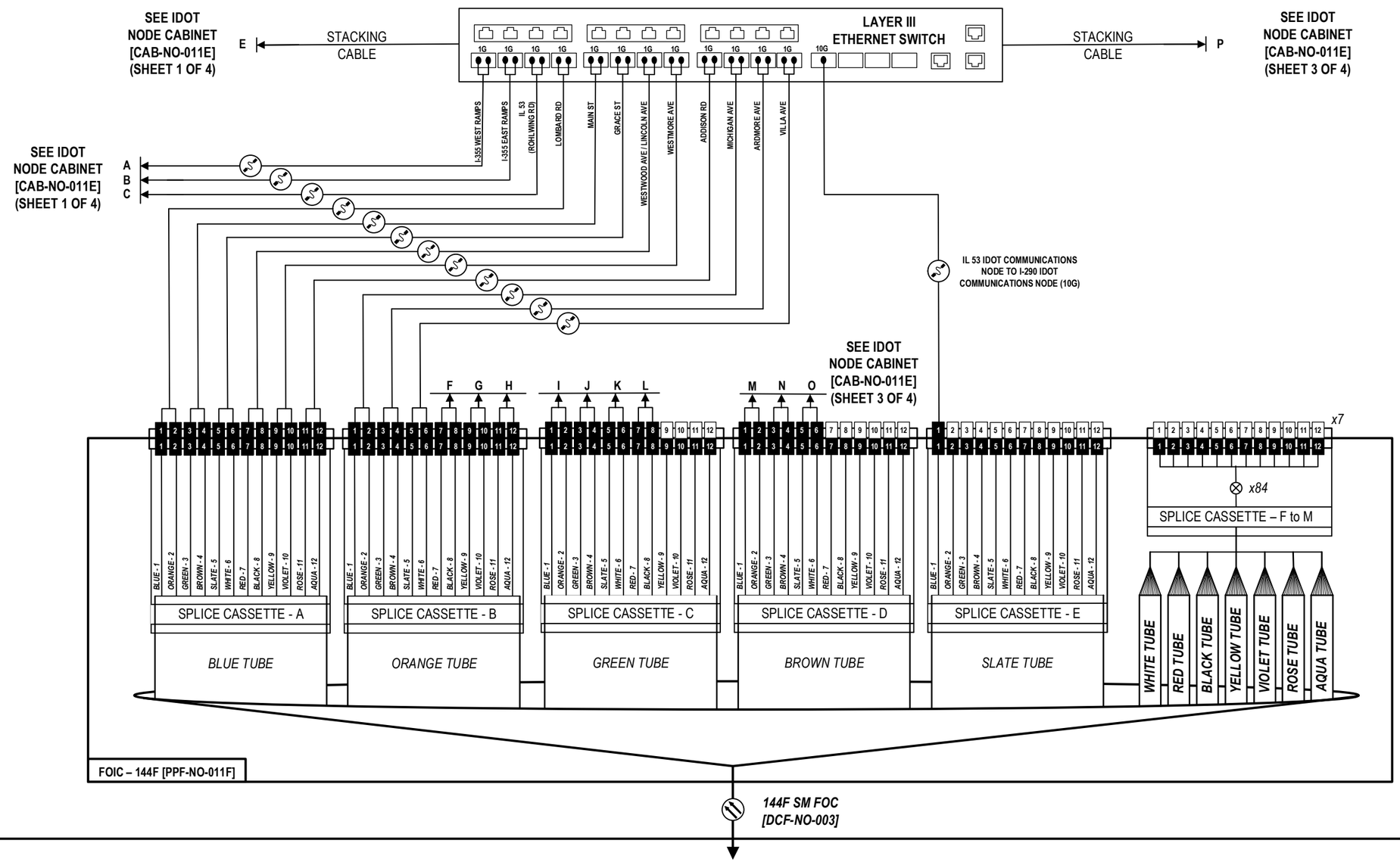


D108121-sht-comm-visio

| | | | | | | | | | | |
|---|---|---|---|---|---|---|---|---|---|---|
| Kimley»Horn | USER NAME = | DESIGNED - | REVISED - | STATE OF ILLINOIS DEPARTMENT OF TRANSPORTATION | FIBER SPLICING AND CABINET CONNECTION DETAILS IDOT NODE CABINET [CAB-NO-011E] (SHEET 2 OF 4) | F.A.P. RTE. | SECTION | COUNTY | TOTAL SHEETS | SHEET NO. |
| | | DRAWN - | REVISED - | | | 307 | 2020-263-SUR,SW&TS | DUPAGE | 529 | 417 |
| | PLOT SCALE = N.T.S. | CHECKED - | REVISED - | | | | | CONTRACT NO. 62N33 | | |
| | PLOT DATE = | DATE - | REVISED - | | SCALE: SHEET OF SHEETS STA. TO STA. | | ILLINOIS | FED. AID PROJECT | | |

**IL 64 (NORTH AVENUE) AT IL 53**

**IDOT COMMUNICATIONS NODE CABINET [CAB-NO-011E]**

**NOTE:**

1) **ALL FIBER OPTIC JUMP CABLES SHALL BE LC-LC CONNECTOR TYPE UNLESS APPROVED BY THE ENGINEER. NO ADAPTERS OR CONVERSION DEVICES WILL BE ALLOWED.**

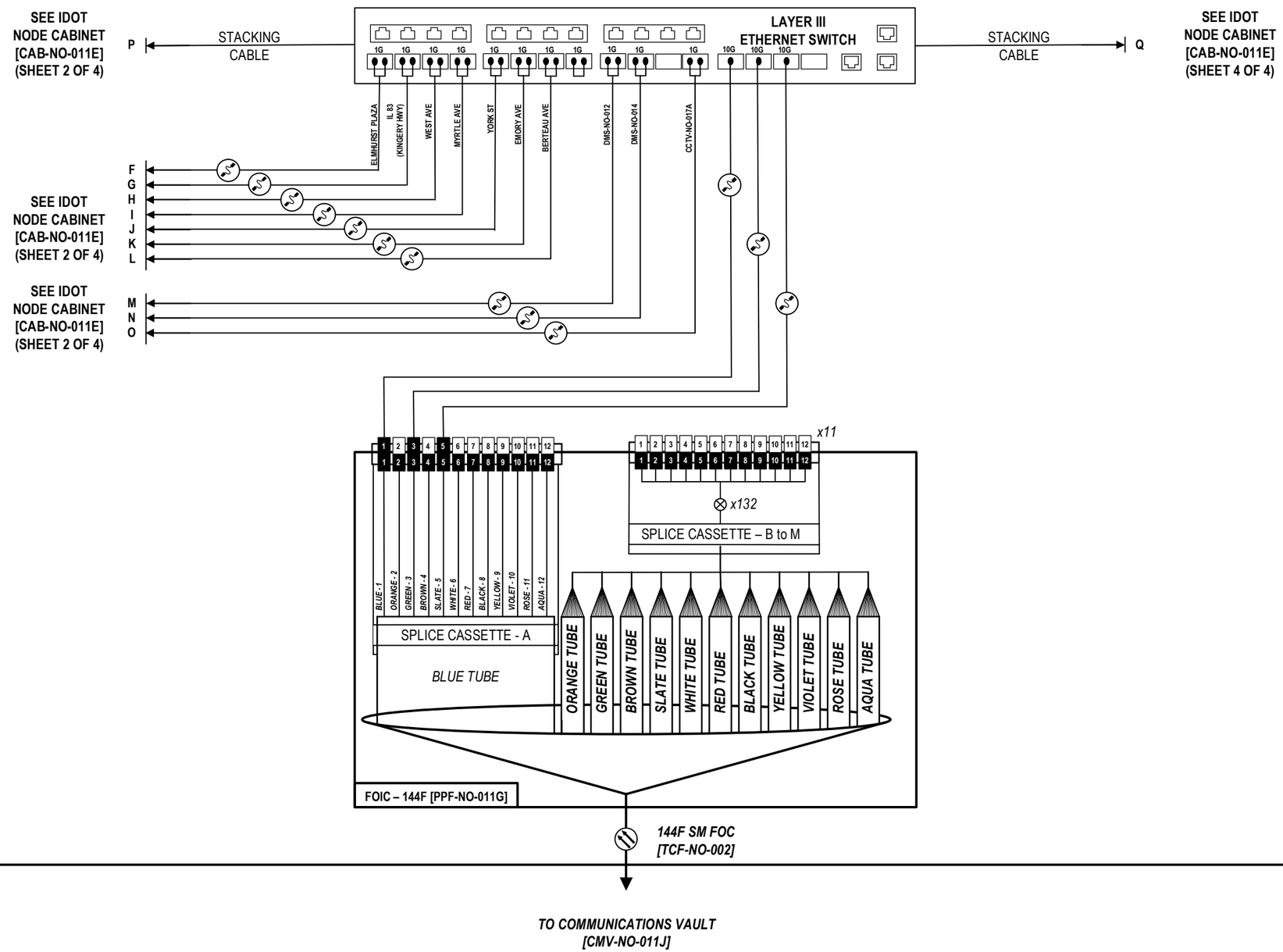


D108121-sht-comm-visio

Kimley»Horn

| USER NAME = | DESIGNED - | REVISED - |
|---|---|---|
| | DRAWN - | REVISED - |
| PLOT SCALE = N.T.S. | CHECKED - | REVISED - |
| PLOT DATE = | DATE - | REVISED - |

**STATE OF ILLINOIS**
**DEPARTMENT OF TRANSPORTATION**

**FIBER SPLICING AND CABINET CONNECTION DETAILS**
**IDOT NODE CABINET [CAB-NO-011E] (SHEET 3 OF 4)**

SCALE: SHEET OF SHEETS STA. TO STA.

| F.A.P. RTE. | SECTION | COUNTY | TOTAL SHEETS | SHEET NO. |
|---|---|---|---|---|
| 307 | 2020-263-SUR,SW&TS | DUPAGE | 529 | 418 |
| | | CONTRACT NO. 62N33 | | |

ILLINOIS FED. AID PROJECT

## IL 64 (NORTH AVENUE) AT IL 53

IDOT COMMUNICATIONS NODE CABINET [CAB-NO-011E]

**NOTE:**

1) ALL FIBER OPTIC JUMP CABLES SHALL BE LC-LC CONNECTOR TYPE UNLESS APPROVED BY THE ENGINEER. NO ADAPTERS OR CONVERSION DEVICES WILL BE ALLOWED.

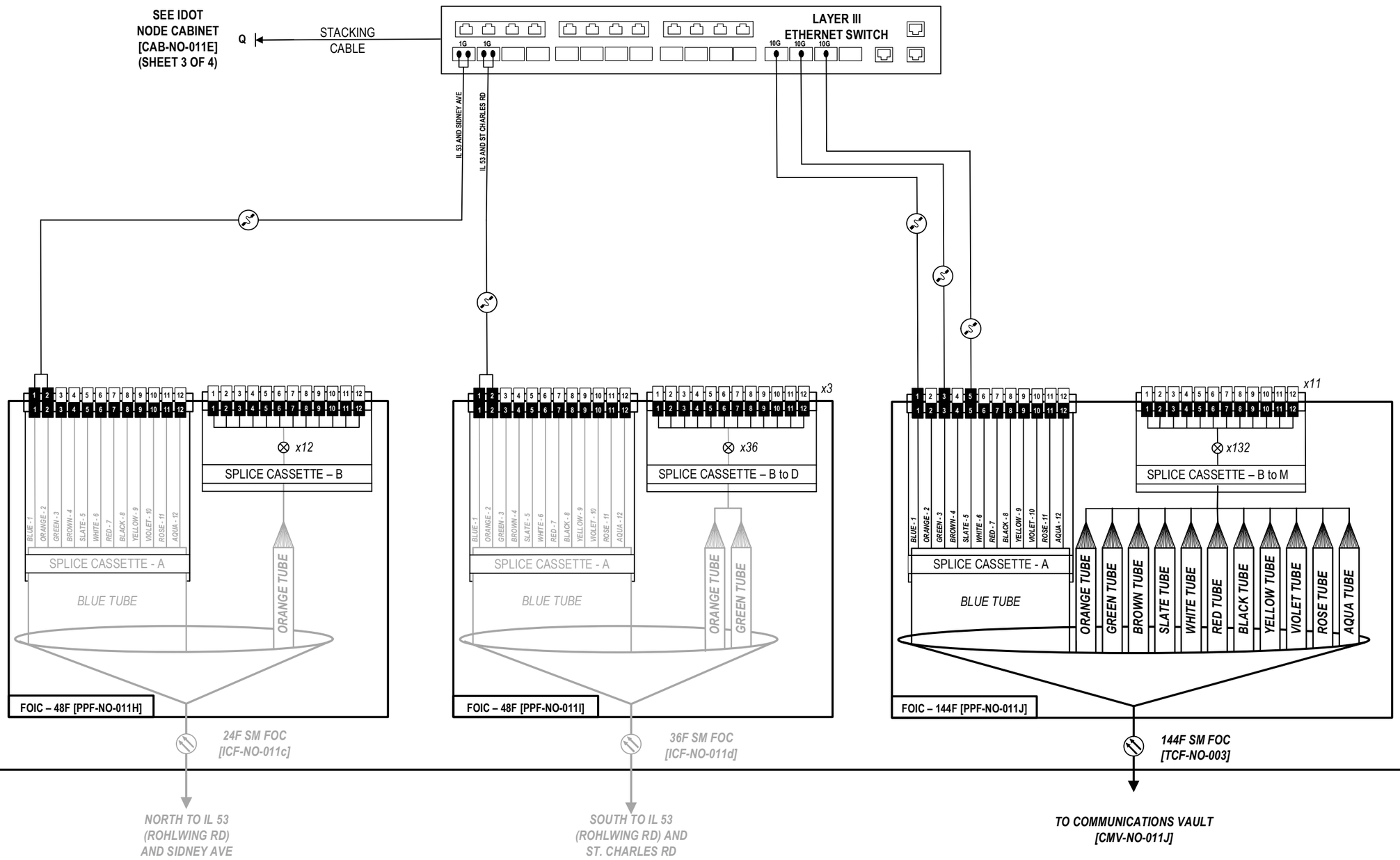


| | | | |
|---|---|---|---|
| Kimley»Horn | USER NAME = | DESIGNED - | REVISED - |
| | | DRAWN - | REVISED - |
| | PLOT SCALE = N.T.S. | CHECKED - | REVISED - |
| | PLOT DATE = | DATE - | REVISED - |

**STATE OF ILLINOIS**
**DEPARTMENT OF TRANSPORTATION**

**FIBER SPLICING AND CABINET CONNECTION DETAILS**
**IDOT NODE CABINET [CAB-NO-011E] (SHEET 4 OF 4)**

SCALE: | SHEET OF SHEETS | STA. TO STA.

| F.A.P. RTE. | SECTION | COUNTY | TOTAL SHEETS | SHEET NO. |
|---|---|---|---|---|
| 307 | 2020-263-SUR,SW&TS | DUPAGE | 529 | 419 |
| | | CONTRACT NO. 62N33 | | |
| | ILLINOIS | FED. AID PROJECT | | |

D108121-sht-comm-visio

NOTE:

1) ALL FIBER OPTIC JUMP CABLES SHALL BE LC-LC CONNECTOR TYPE UNLESS APPROVED BY THE ENGINEER. NO ADAPTERS OR CONVERSION DEVICES WILL BE ALLOWED.

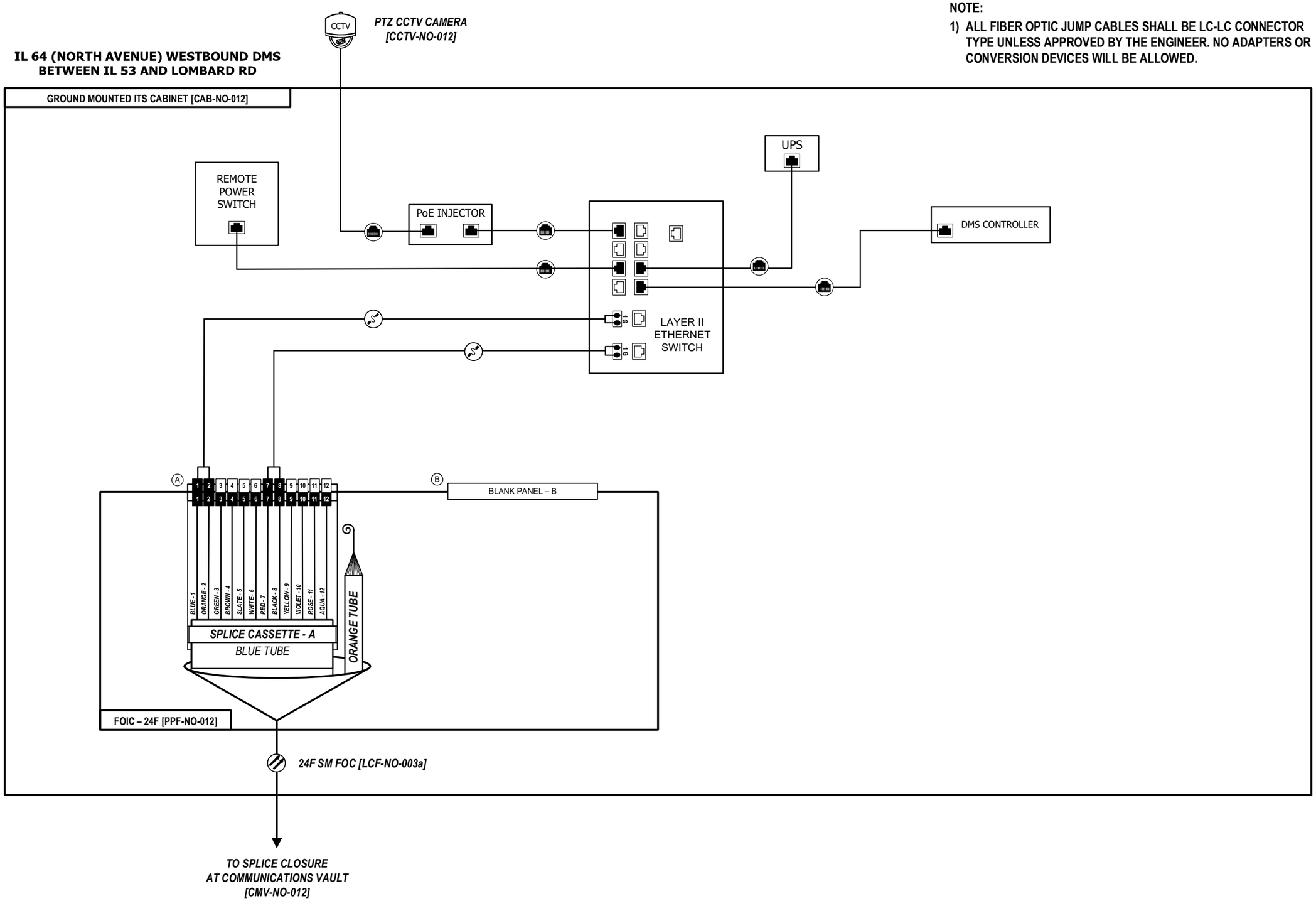


D108121-alt-comm-visio

Kimley»Horn

| | | |
|---|---|---|
| USER NAME = | DESIGNED - | REVISED - |
| | DRAWN - | REVISED - |
| PLOT SCALE = N.T.S. | CHECKED - | REVISED - |
| PLOT DATE = | DATE - | REVISED - |

**STATE OF ILLINOIS**
**DEPARTMENT OF TRANSPORTATION**

**FIBER SPLICING AND CABINET CONNECTION DETAILS**
**GROUND MOUNTED ITS CABINET [CAB-NO-012]**

SCALE: SHEET OF SHEETS STA. TO STA.

| F.A.P. RTE. | SECTION | COUNTY | TOTAL SHEETS | SHEET NO. |
|---|---|---|---|---|
| 307 | 2020-263-SUR,SW&TS | DUPAGE | 529 | 420 |
| | | CONTRACT NO. 62N33 | | |
| | ILLINOIS | FED. AID PROJECT | | |

NOTE:

1) ALL FIBER OPTIC JUMP CABLES SHALL BE LC-LC CONNECTOR TYPE UNLESS APPROVED BY THE ENGINEER. NO ADAPTERS OR CONVERSION DEVICES WILL BE ALLOWED.

**IL 64 (NORTH AVENUE)**
**AT LOMBARD RD**

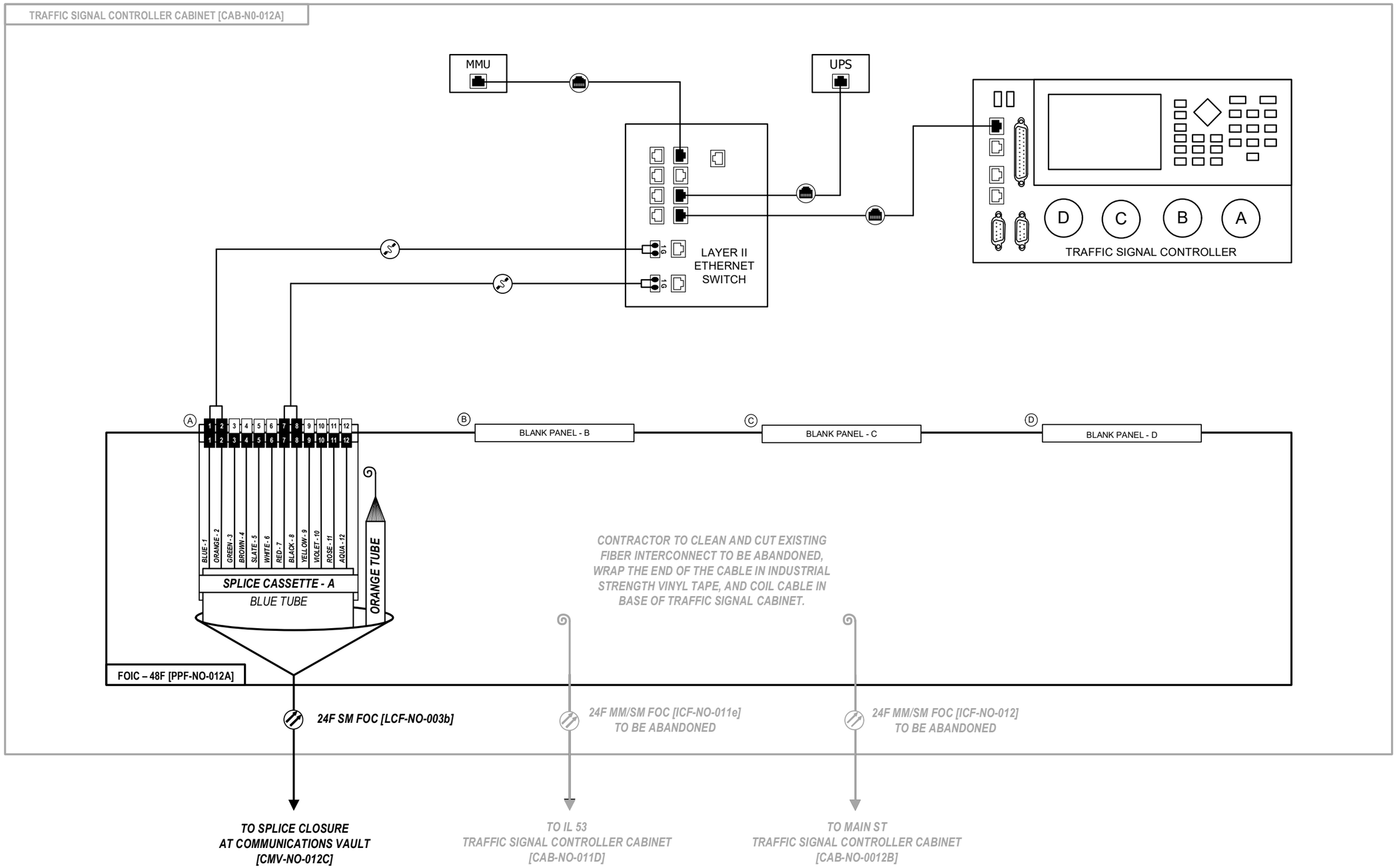


D108121-ahb-comm-visio

Kimley»Horn

| | | |
|---|---|---|
| USER NAME = | DESIGNED - | REVISED - |
| | DRAWN - | REVISED - |
| PLOT SCALE = N.T.S. | CHECKED - | REVISED - |
| PLOT DATE = | DATE - | REVISED - |

**STATE OF ILLINOIS**
**DEPARTMENT OF TRANSPORTATION**

**FIBER SPLICING AND CABINET CONNECTION DETAILS**
**TRAFFIC SIGNAL CONTROLLER CABINET [CAB-NO-012A]**

SCALE: SHEET OF SHEETS STA. TO STA.

| F.A.P. RTE. | SECTION | COUNTY | TOTAL SHEETS | SHEET NO. |
|---|---|---|---|---|
| 307 | 2020-263-SUR,SW&TS | DUPAGE | 529 | 421 |
| | | CONTRACT NO. 62N33 | | |

ILLINOIS FED. AID PROJECT

NOTE:

1) ALL FIBER OPTIC JUMP CABLES SHALL BE LC-LC CONNECTOR TYPE UNLESS APPROVED BY THE ENGINEER. NO ADAPTERS OR CONVERSION DEVICES WILL BE ALLOWED.

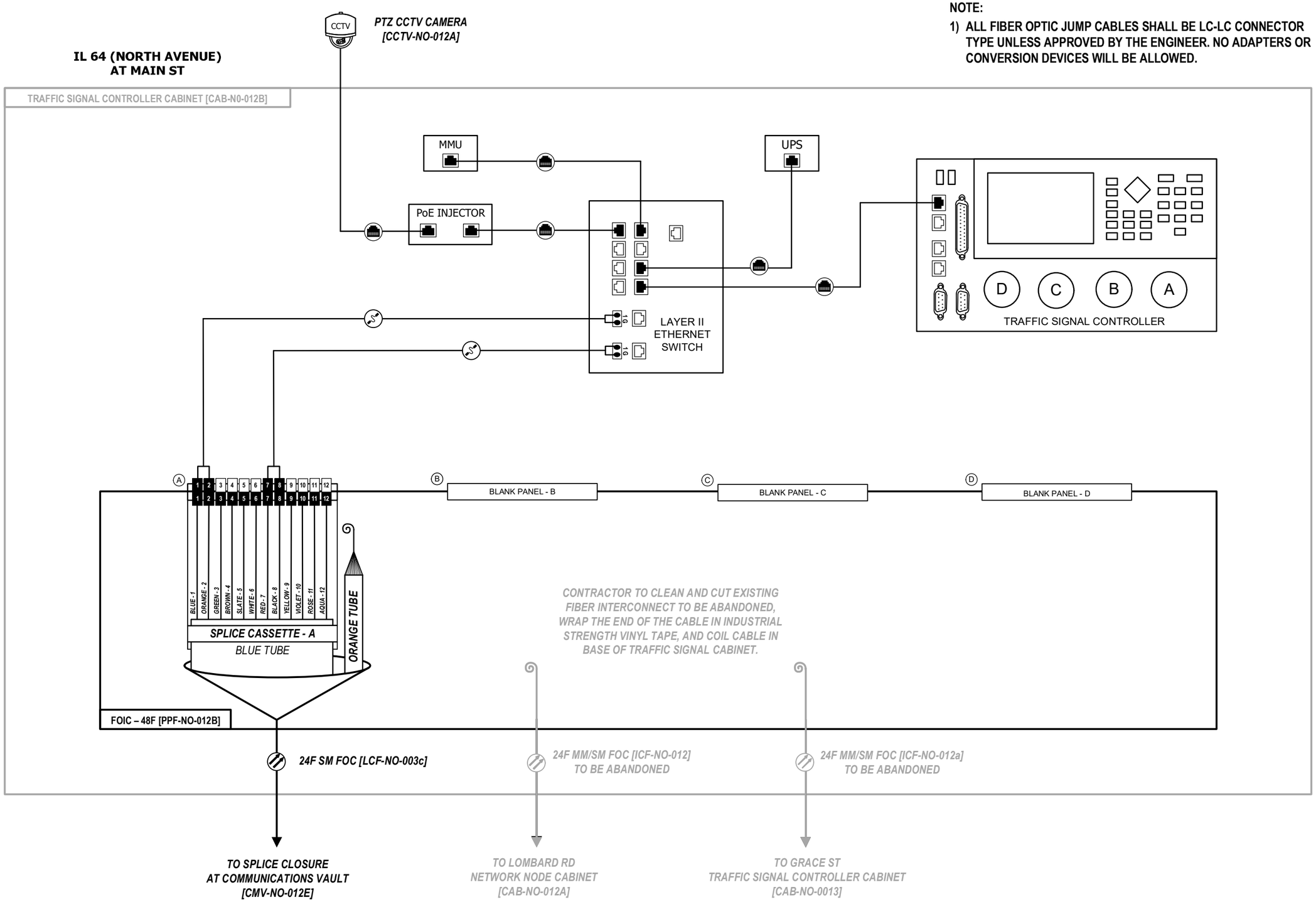


D108121-ahl-comm-visio

Kimley»Horn

| | | |
|---|---|---|
| USER NAME = | DESIGNED - | REVISED - |
| | DRAWN - | REVISED - |
| PLOT SCALE = N.T.S. | CHECKED - | REVISED - |
| PLOT DATE = | DATE - | REVISED - |

**STATE OF ILLINOIS**
**DEPARTMENT OF TRANSPORTATION**

**FIBER SPLICING AND CABINET CONNECTION DETAILS**
**TRAFFIC SIGNAL CONTROLLER CABINET [CAB-NO-012B]**

SCALE: SHEET OF SHEETS STA. TO STA.

| F.A.P. RTE. | SECTION | COUNTY | TOTAL SHEETS | SHEET NO. |
|---|---|---|---|---|
| 307 | 2020-263-SUR,SW&TS | DUPAGE | 529 | 422 |
| | | CONTRACT NO. 62N33 | | |

ILLINOIS FED. AID PROJECT

NOTE:

1) ALL FIBER OPTIC JUMP CABLES SHALL BE LC-LC CONNECTOR TYPE UNLESS APPROVED BY THE ENGINEER. NO ADAPTERS OR CONVERSION DEVICES WILL BE ALLOWED.

**IL 64 (NORTH AVENUE)**
**AT GRACE ST**

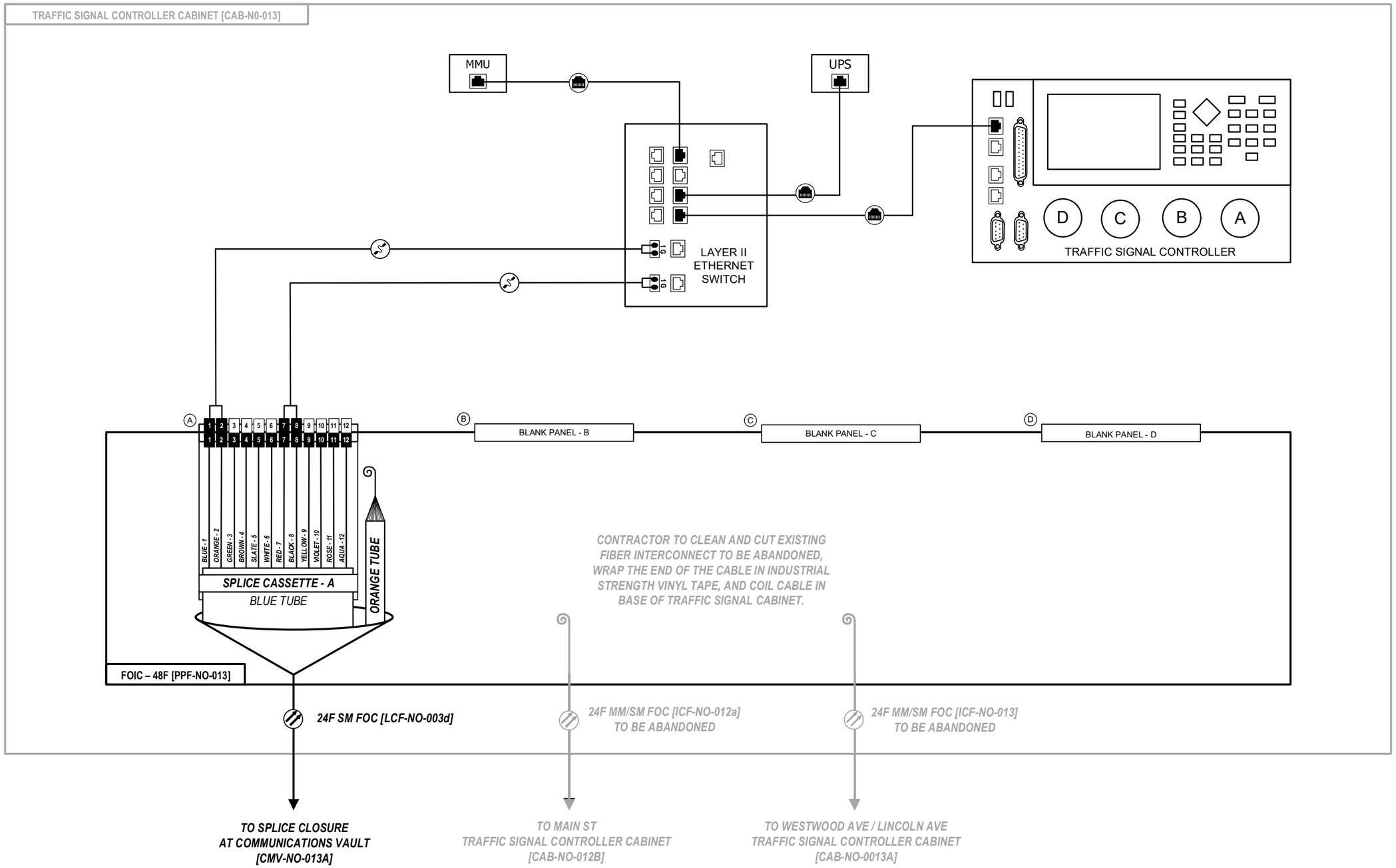


D108121-ahl-comm-visio

Kimley»Horn

| | | |
|---|---|---|
| USER NAME = | DESIGNED - | REVISED - |
| | DRAWN - | REVISED - |
| PLOT SCALE = N.T.S. | CHECKED - | REVISED - |
| PLOT DATE = | DATE - | REVISED - |

**STATE OF ILLINOIS**
**DEPARTMENT OF TRANSPORTATION**

**FIBER SPLICING AND CABINET CONNECTION DETAILS**
**TRAFFIC SIGNAL CONTROLLER CABINET [CAB-NO-013]**

SCALE: SHEET OF SHEETS STA. TO STA.

| F.A.P. RTE. | SECTION | COUNTY | TOTAL SHEETS | SHEET NO. |
|---|---|---|---|---|
| 307 | 2020-263-SUR,SW&TS | DUPAGE | 529 | 423 |
| | | CONTRACT NO. 62N33 | | |

ILLINOIS FED. AID PROJECT

NOTE:

1) ALL FIBER OPTIC JUMP CABLES SHALL BE LC-LC CONNECTOR TYPE UNLESS APPROVED BY THE ENGINEER. NO ADAPTERS OR CONVERSION DEVICES WILL BE ALLOWED.

**IL 64 (NORTH AVENUE)**
**AT WESTWOOD AVE / LINCOLN AVE**

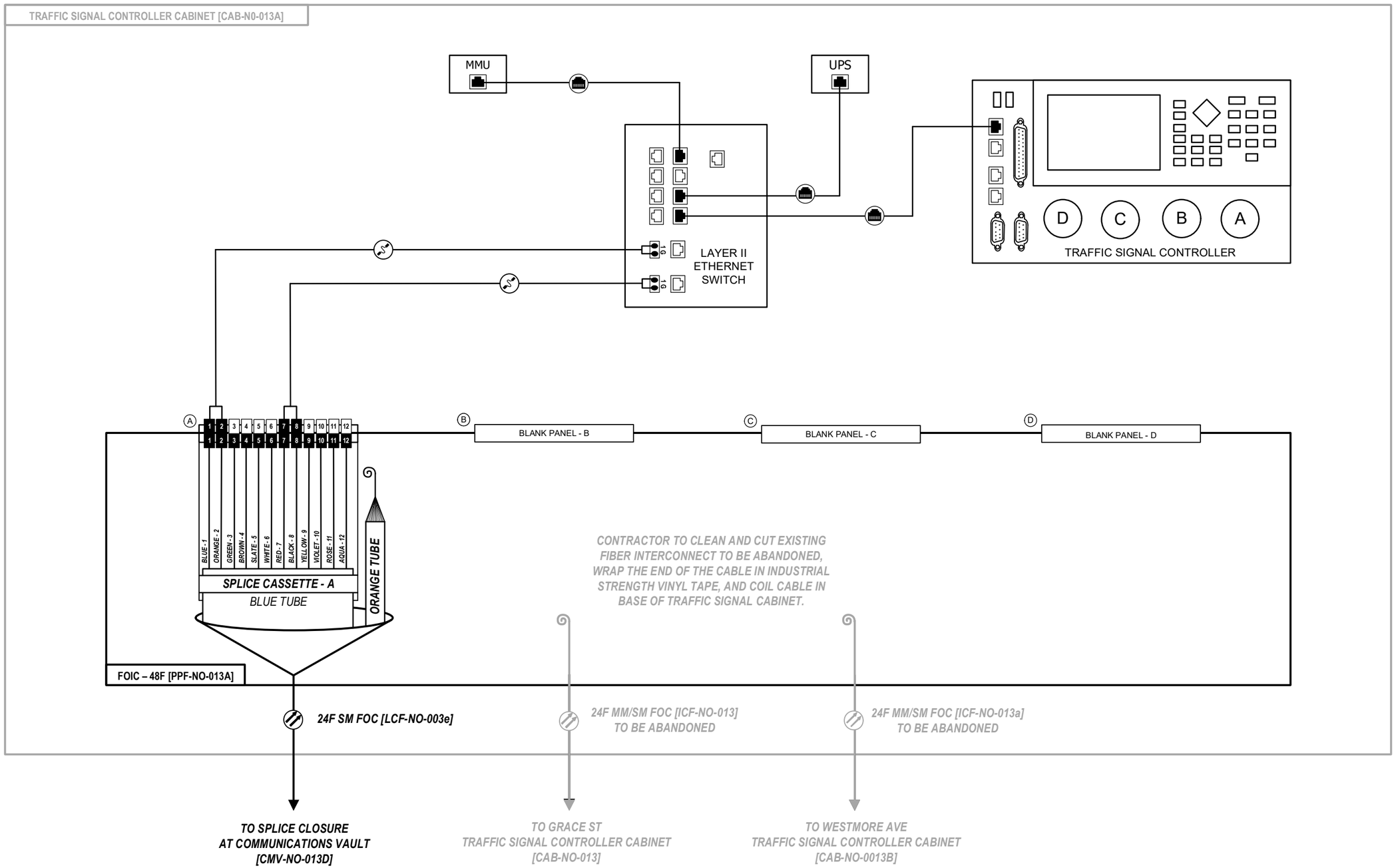


D108121-ahl-comm-visio

Kimley»Horn

| | | |
|---|---|---|
| USER NAME = | DESIGNED - | REVISED - |
| | DRAWN - | REVISED - |
| PLOT SCALE = N.T.S. | CHECKED - | REVISED - |
| PLOT DATE = | DATE - | REVISED - |

**STATE OF ILLINOIS**
**DEPARTMENT OF TRANSPORTATION**

**FIBER SPLICING AND CABINET CONNECTION DETAILS**
**TRAFFIC SIGNAL CONTROLLER CABINET [CAB-NO-013A]**

SCALE: SHEET OF SHEETS STA. TO STA.

| F.A.P. RTE. | SECTION | COUNTY | TOTAL SHEETS | SHEET NO. |
|---|---|---|---|---|
| 307 | 2020-263-SUR,SW&TS | DUPAGE | 529 | 424 |
| | | CONTRACT NO. 62N33 | | |

ILLINOIS FED. AID PROJECT

NOTE:

1) ALL FIBER OPTIC JUMP CABLES SHALL BE LC-LC CONNECTOR TYPE UNLESS APPROVED BY THE ENGINEER. NO ADAPTERS OR CONVERSION DEVICES WILL BE ALLOWED.

**IL 64 (NORTH AVENUE)**
**AT WESTMORE AVE**

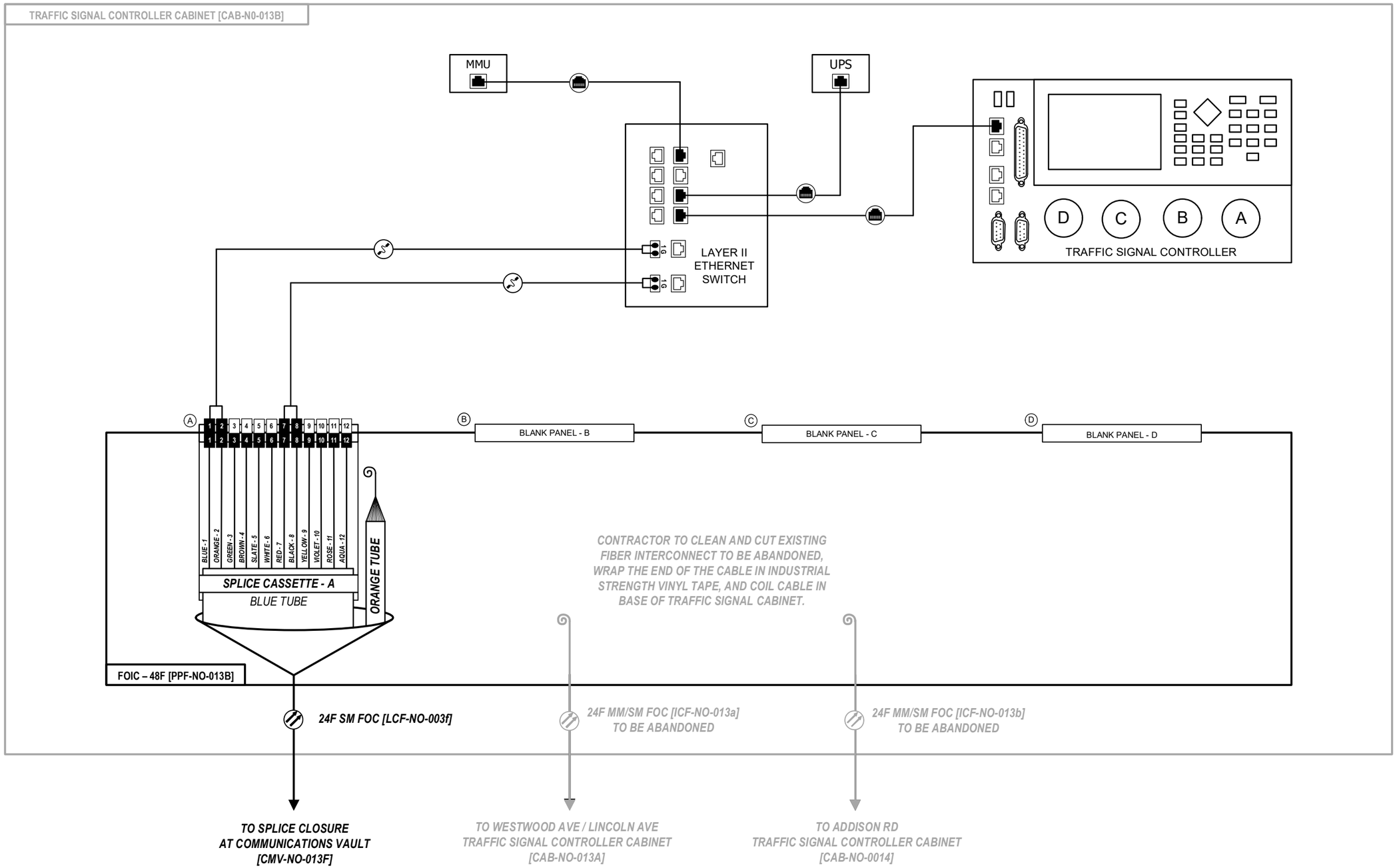


D108121-ahb-comm-visio

Kimley»Horn

| | | |
|---|---|---|
| USER NAME = | DESIGNED - | REVISED - |
| | DRAWN - | REVISED - |
| PLOT SCALE = N.T.S. | CHECKED - | REVISED - |
| PLOT DATE = | DATE - | REVISED - |

**STATE OF ILLINOIS**
**DEPARTMENT OF TRANSPORTATION**

**FIBER SPLICING AND CABINET CONNECTION DETAILS**
**TRAFFIC SIGNAL CONTROLLER CABINET [CAB-NO-013B]**

SCALE: SHEET OF SHEETS STA. TO STA.

| F.A.P. RTE. | SECTION | COUNTY | TOTAL SHEETS | SHEET NO. |
|---|---|---|---|---|
| 307 | 2020-263-SUR,SW&TS | DUPAGE | 529 | 425 |
| | | CONTRACT NO. 62N33 | | |

ILLINOIS FED. AID PROJECT

NOTE:

1) ALL FIBER OPTIC JUMP CABLES SHALL BE LC-LC CONNECTOR TYPE UNLESS APPROVED BY THE ENGINEER. NO ADAPTERS OR CONVERSION DEVICES WILL BE ALLOWED.

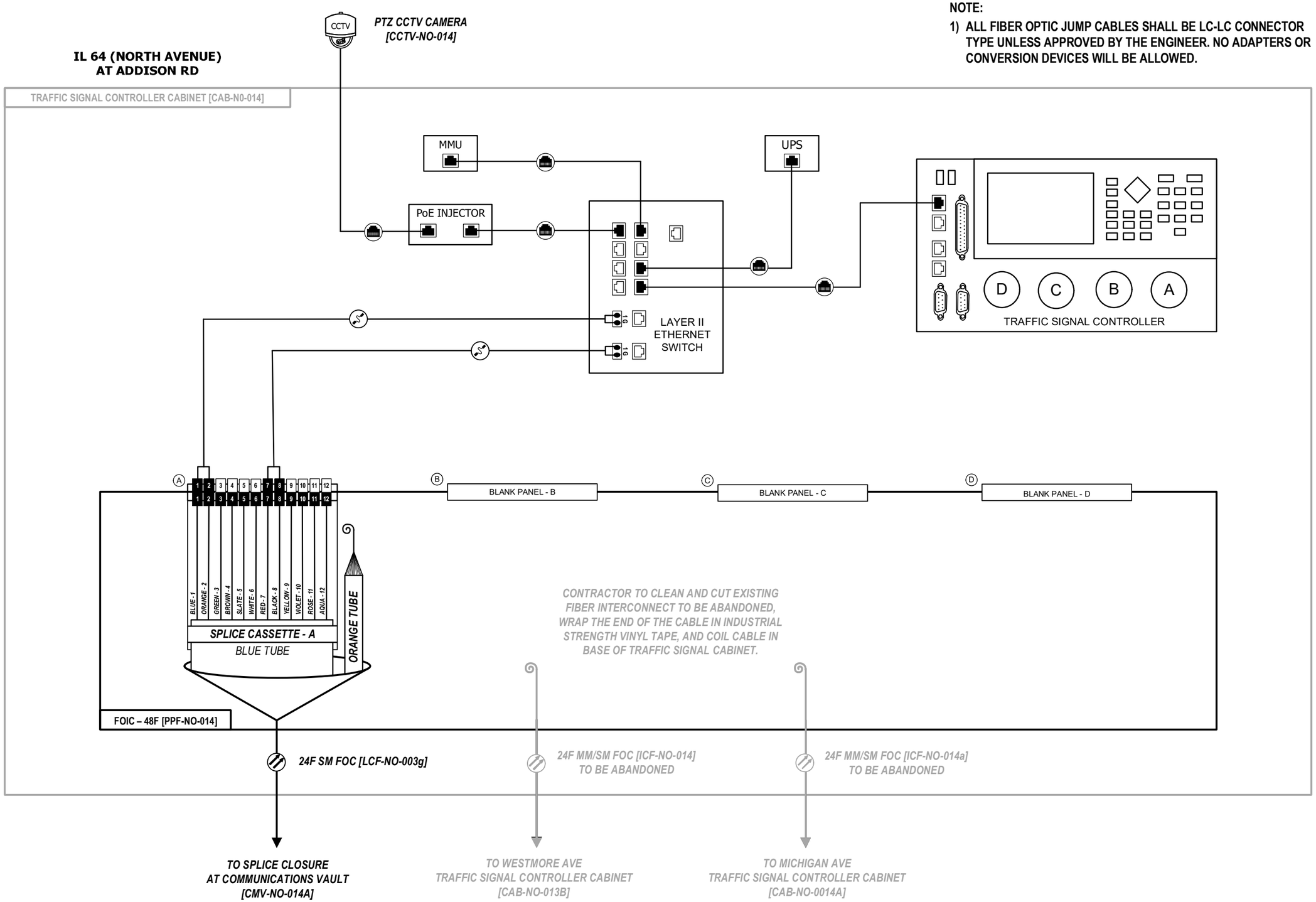


D108121-sht-comm-visio

Kimley»Horn

| | | |
|---|---|---|
| USER NAME = | DESIGNED - | REVISED - |
| | DRAWN - | REVISED - |
| PLOT SCALE = N.T.S. | CHECKED - | REVISED - |
| PLOT DATE = | DATE - | REVISED - |

STATE OF ILLINOIS
DEPARTMENT OF TRANSPORTATION

FIBER SPLICING AND CABINET CONNECTION DETAILS
TRAFFIC SIGNAL CONTROLLER CABINET [CAB-NO-014]

SCALE: SHEET OF SHEETS STA. TO STA.

| F.A.P. RTE. | SECTION | COUNTY | TOTAL SHEETS | SHEET NO. |
|---|---|---|---|---|
| 307 | 2020-263-SUR,SW&TS | DUPAGE | 529 | 426 |
| | | CONTRACT NO. 62N33 | | |

ILLINOIS FED. AID PROJECT

NOTE:

1) ALL FIBER OPTIC JUMP CABLES SHALL BE LC-LC CONNECTOR TYPE UNLESS APPROVED BY THE ENGINEER. NO ADAPTERS OR CONVERSION DEVICES WILL BE ALLOWED.

**IL 64 (NORTH AVENUE)**
**AT MICHIGAN AVE**

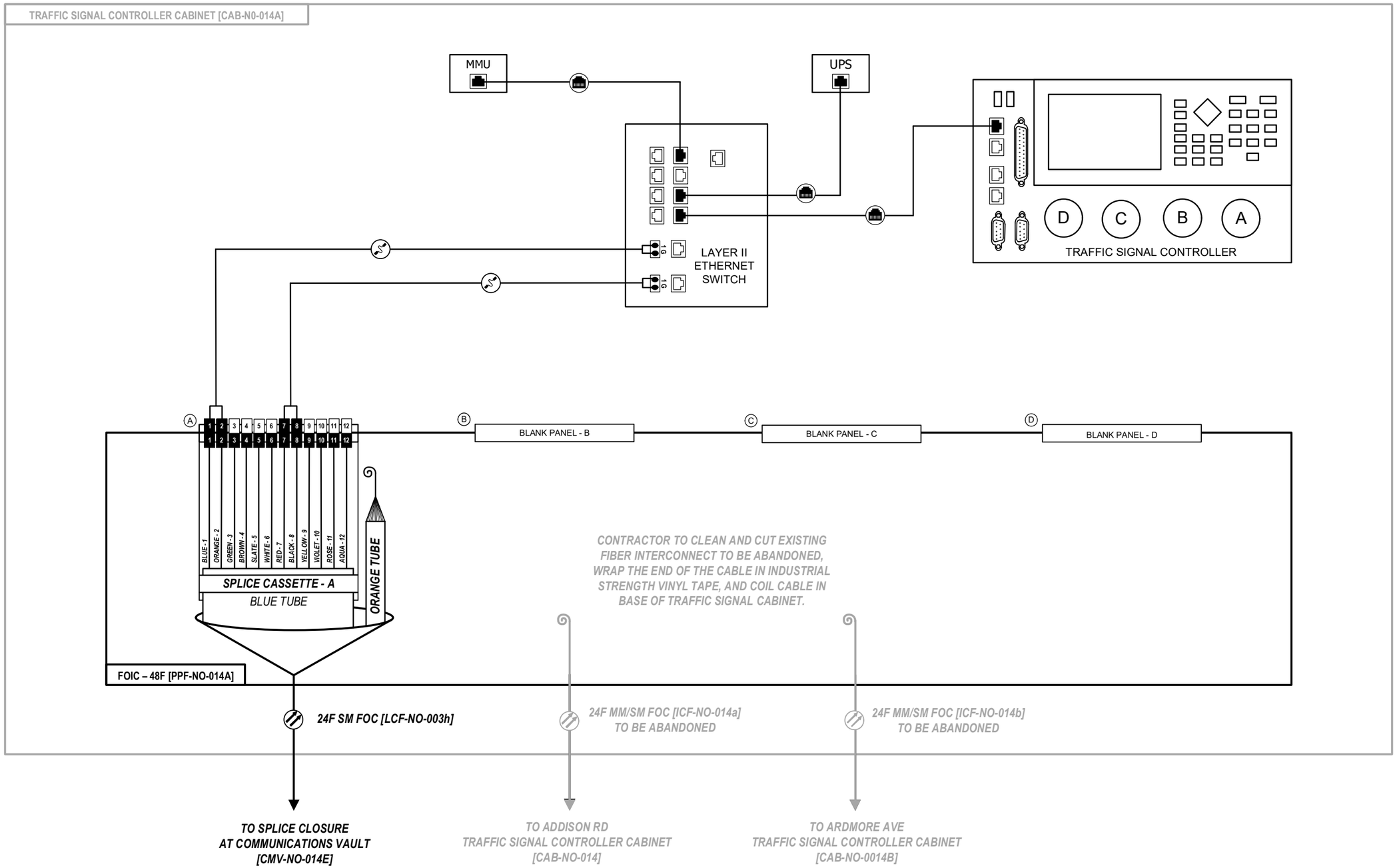


D108121-ahl-comm-visio

Kimley»Horn

| | | |
|---|---|---|
| USER NAME = | DESIGNED - | REVISED - |
| | DRAWN - | REVISED - |
| PLOT SCALE = N.T.S. | CHECKED - | REVISED - |
| PLOT DATE = | DATE - | REVISED - |

**STATE OF ILLINOIS**
**DEPARTMENT OF TRANSPORTATION**

**FIBER SPLICING AND CABINET CONNECTION DETAILS**
**TRAFFIC SIGNAL CONTROLLER CABINET [CAB-NO-014A]**

SCALE: SHEET OF SHEETS STA. TO STA.

| F.A.P. RTE. | SECTION | COUNTY | TOTAL SHEETS | SHEET NO. |
|---|---|---|---|---|
| 307 | 2020-263-SUR,SW&TS | DUPAGE | 529 | 427 |
| | | CONTRACT NO. 62N33 | | |

ILLINOIS FED. AID PROJECT

NOTE:

1) ALL FIBER OPTIC JUMP CABLES SHALL BE LC-LC CONNECTOR TYPE UNLESS APPROVED BY THE ENGINEER. NO ADAPTERS OR CONVERSION DEVICES WILL BE ALLOWED.

**IL 64 (NORTH AVENUE)**
**AT ARDMORE AVE**

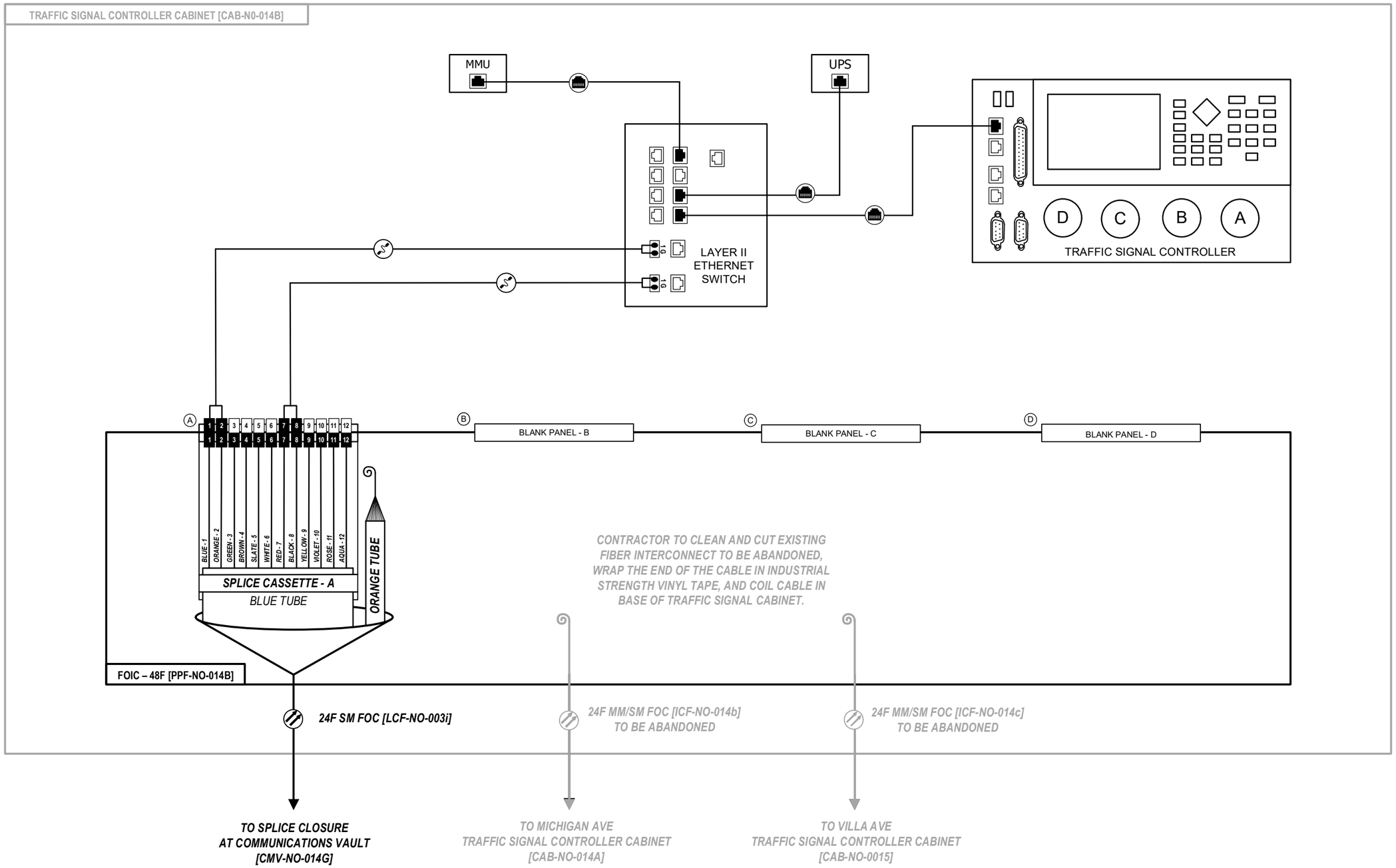


D108121-ahl-comm-visio

Kimley»Horn

| | | |
|---|---|---|
| USER NAME = | DESIGNED - | REVISED - |
| | DRAWN - | REVISED - |
| PLOT SCALE = N.T.S. | CHECKED - | REVISED - |
| PLOT DATE = | DATE - | REVISED - |

**STATE OF ILLINOIS**
**DEPARTMENT OF TRANSPORTATION**

**FIBER SPLICING AND CABINET CONNECTION DETAILS**
**TRAFFIC SIGNAL CONTROLLER CABINET [CAB-NO-014B]**

SCALE: SHEET OF SHEETS STA. TO STA.

| F.A.P. RTE. | SECTION | COUNTY | TOTAL SHEETS | SHEET NO. |
|---|---|---|---|---|
| 307 | 2020-263-SUR,SW&TS | DUPAGE | 529 | 428 |
| | | CONTRACT NO. 62N33 | | |

ILLINOIS FED. AID PROJECT

NOTE:

1) ALL FIBER OPTIC JUMP CABLES SHALL BE LC-LC CONNECTOR TYPE UNLESS APPROVED BY THE ENGINEER. NO ADAPTERS OR CONVERSION DEVICES WILL BE ALLOWED.

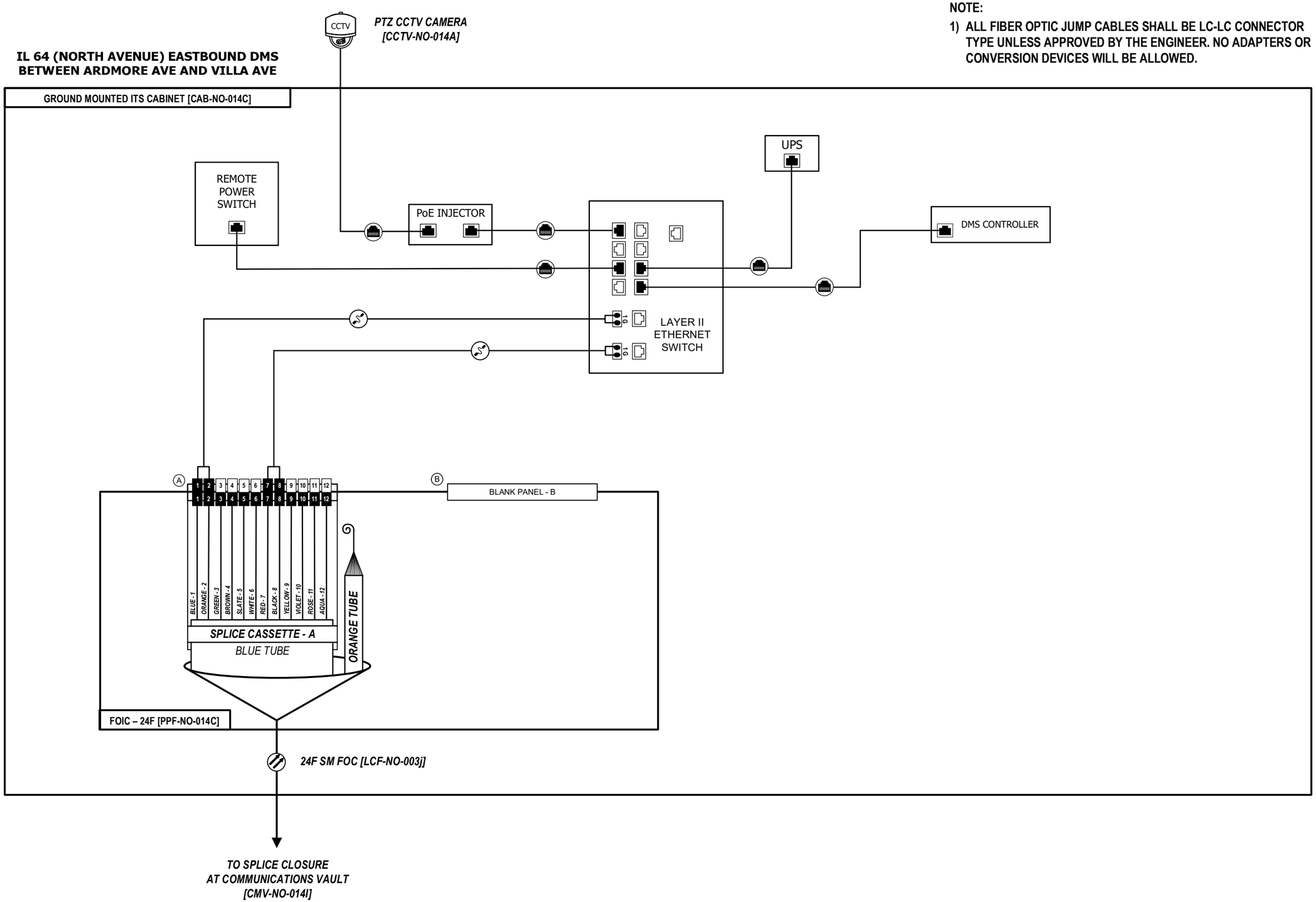


D108121-elt-comm-visio

Kimley»Horn

| | | |
|---|---|---|
| USER NAME = | DESIGNED - | REVISED - |
| | DRAWN - | REVISED - |
| PLOT SCALE = N.T.S. | CHECKED - | REVISED - |
| PLOT DATE = | DATE - | REVISED - |

STATE OF ILLINOIS
DEPARTMENT OF TRANSPORTATION

FIBER SPLICING AND CABINET CONNECTION DETAILS
GROUND MOUNTED ITS CABINET [CAB-NO-014C]

SCALE: SHEET OF SHEETS STA. TO STA.

| F.A.P. RTE. | SECTION | COUNTY | TOTAL SHEETS | SHEET NO. |
|---|---|---|---|---|
| 307 | 2020-263-SUR,SW&TS | DUPAGE | 529 | 429 |
| | | CONTRACT NO. 62N33 | | |
| | ILLINOIS | FED. AID PROJECT | | |

NOTE:

1) ALL FIBER OPTIC JUMP CABLES SHALL BE LC-LC CONNECTOR TYPE UNLESS APPROVED BY THE ENGINEER. NO ADAPTERS OR CONVERSION DEVICES WILL BE ALLOWED.

**IL 64 (NORTH AVENUE)**
**AT VILLA AVE**

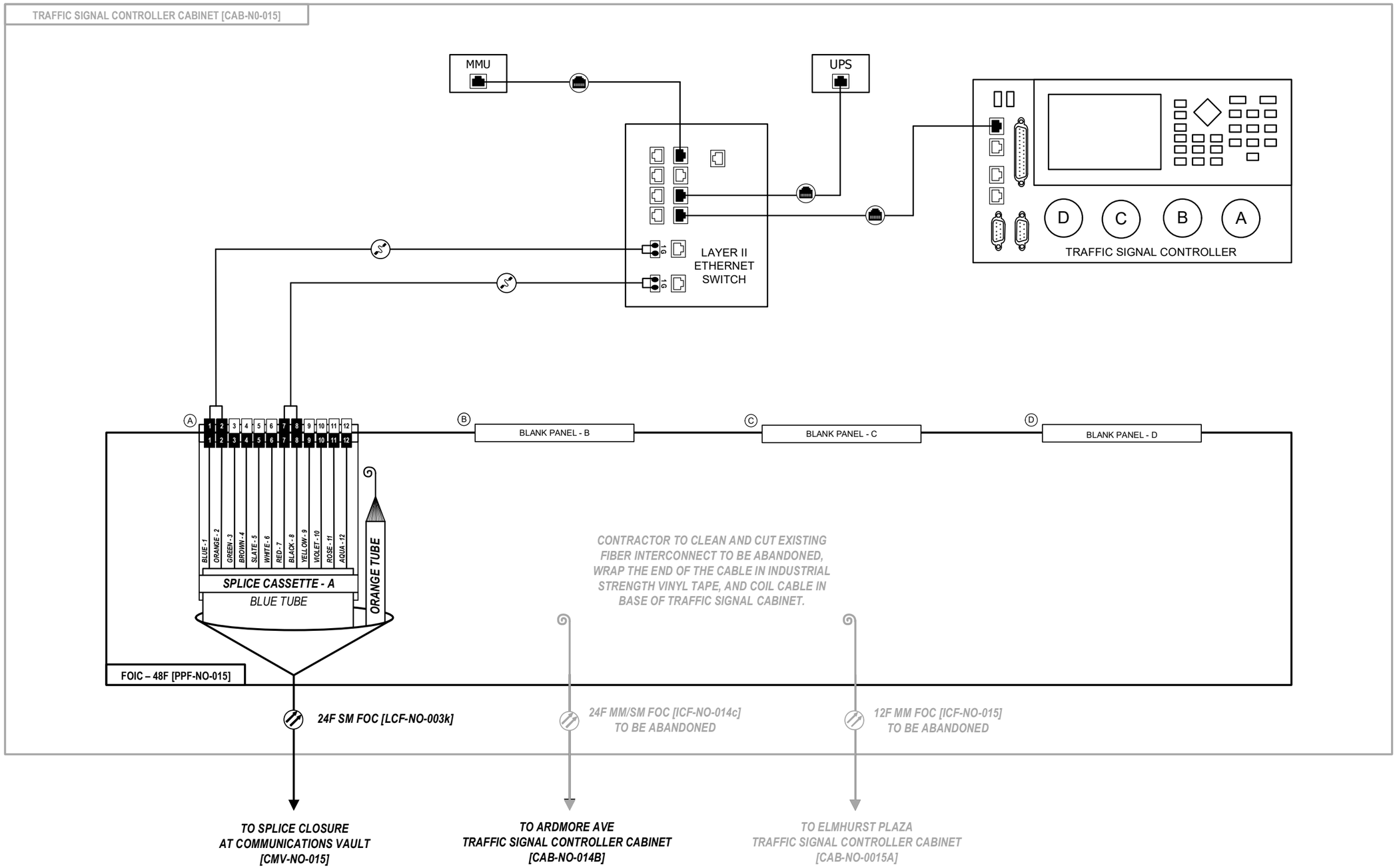


D108121-elt-comm-visio

Kimley»Horn

| | | |
|---|---|---|
| USER NAME = | DESIGNED - | REVISED - |
| | DRAWN - | REVISED - |
| PLOT SCALE = N.T.S. | CHECKED - | REVISED - |
| PLOT DATE = | DATE - | REVISED - |

**STATE OF ILLINOIS**
**DEPARTMENT OF TRANSPORTATION**

**FIBER SPLICING AND CABINET CONNECTION DETAILS**
**TRAFFIC SIGNAL CONTROLLER CABINET [CAB-NO-015]**

SCALE: SHEET OF SHEETS STA. TO STA.

| F.A.P. RTE. | SECTION | COUNTY | TOTAL SHEETS | SHEET NO. |
|---|---|---|---|---|
| 307 | 2020-263-SUR,SW&TS | DUPAGE | 529 | 430 |
| | | CONTRACT NO. 62N33 | | |

ILLINOIS FED. AID PROJECT

NOTE:

1) ALL FIBER OPTIC JUMP CABLES SHALL BE LC-LC CONNECTOR TYPE UNLESS APPROVED BY THE ENGINEER. NO ADAPTERS OR CONVERSION DEVICES WILL BE ALLOWED.

**IL 64 (NORTH AVENUE)**
**AT ELMHURST PLAZA**

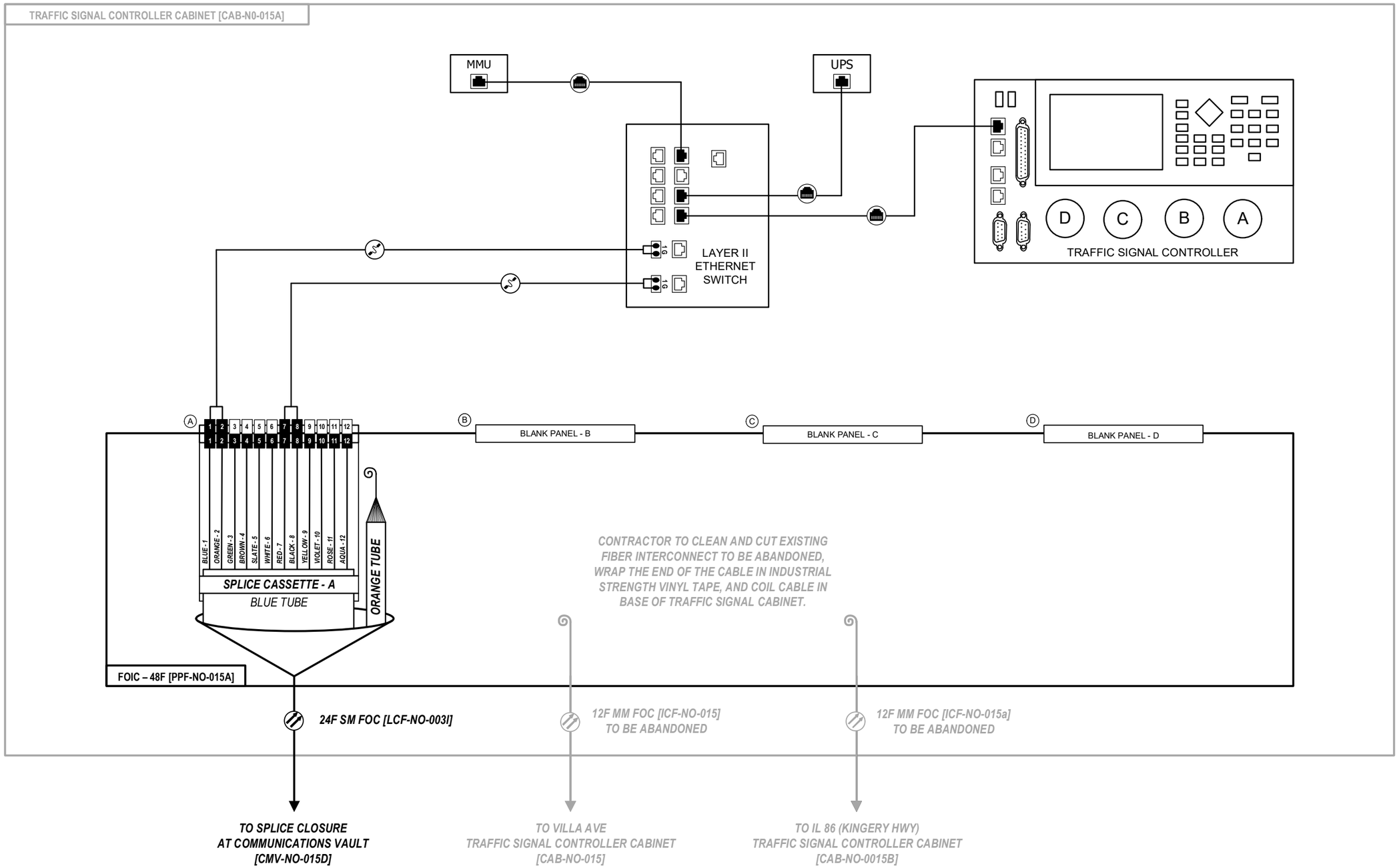


D108121-elt-comm-visio

Kimley»Horn

| | | |
|---|---|---|
| USER NAME = | DESIGNED - | REVISED - |
| | DRAWN - | REVISED - |
| PLOT SCALE = N.T.S. | CHECKED - | REVISED - |
| PLOT DATE = | DATE - | REVISED - |

**STATE OF ILLINOIS**
**DEPARTMENT OF TRANSPORTATION**

**FIBER SPLICING AND CABINET CONNECTION DETAILS**
**TRAFFIC SIGNAL CONTROLLER CABINET [CAB-NO-015A]**

SCALE: SHEET OF SHEETS STA. TO STA.

| F.A.P. RTE. | SECTION | COUNTY | TOTAL SHEETS | SHEET NO. |
|---|---|---|---|---|
| 307 | 2020-263-SUR,SW&TS | DUPAGE | 529 | 431 |
| | | CONTRACT NO. 62N33 | | |

ILLINOIS FED. AID PROJECT

NOTE:

1) ALL FIBER OPTIC JUMP CABLES SHALL BE LC-LC CONNECTOR TYPE UNLESS APPROVED BY THE ENGINEER. NO ADAPTERS OR CONVERSION DEVICES WILL BE ALLOWED.

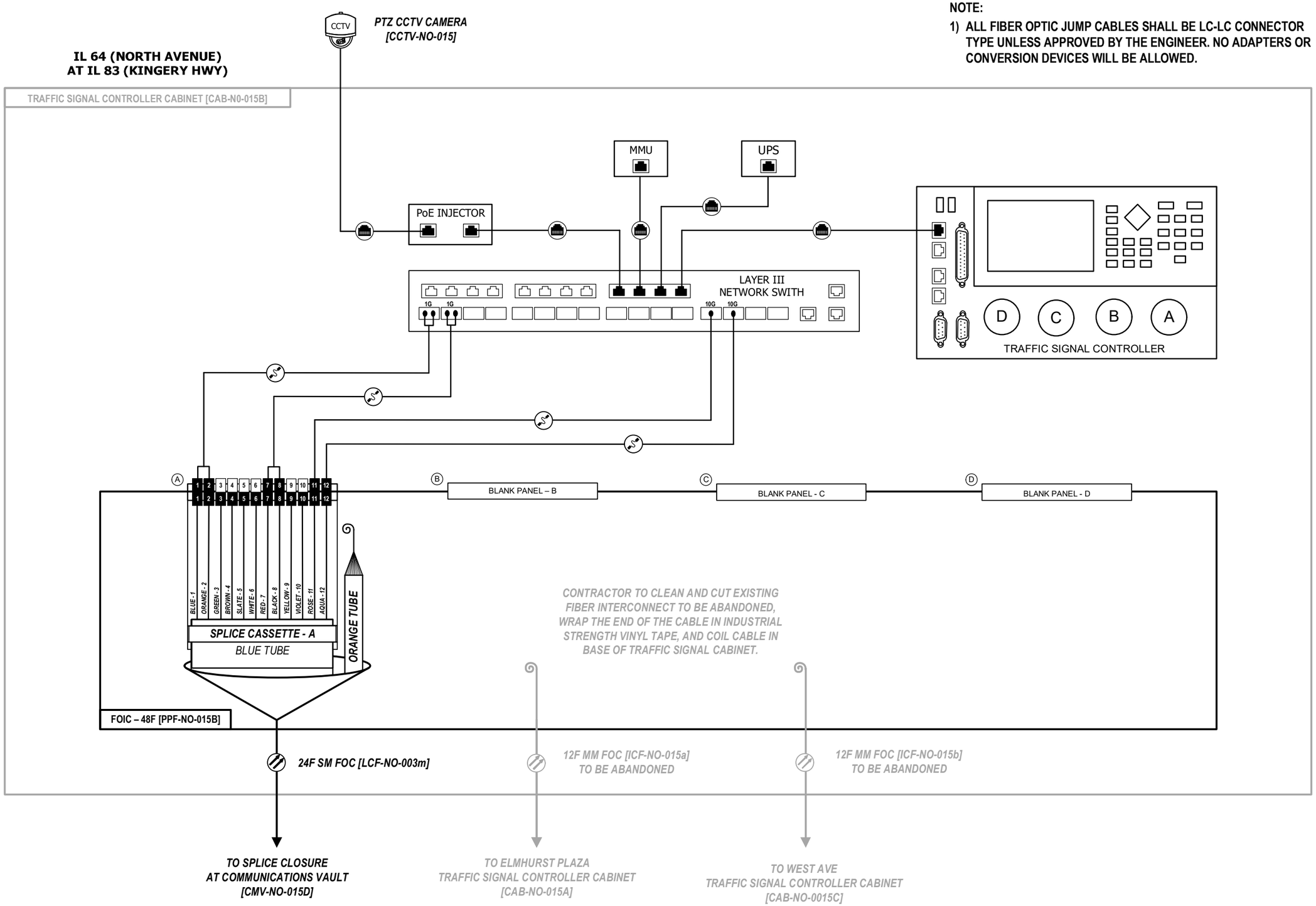


D108121-ahb-comm-visio

Kimley»Horn

| | | |
|---|---|---|
| USER NAME = | DESIGNED - | REVISED - |
| | DRAWN - | REVISED - |
| PLOT SCALE = N.T.S. | CHECKED - | REVISED - |
| PLOT DATE = | DATE - | REVISED - |

STATE OF ILLINOIS
DEPARTMENT OF TRANSPORTATION

FIBER SPLICING AND CABINET CONNECTION DETAILS
TRAFFIC SIGNAL CONTROLLER CABINET [CAB-NO-015B]

SCALE: SHEET OF SHEETS STA. TO STA.

| F.A.P. RTE. | SECTION | COUNTY | TOTAL SHEETS | SHEET NO. |
|---|---|---|---|---|
| 307 | 2020-263-SUR,SW&TS | DUPAGE | 529 | 432 |
| | | CONTRACT NO. 62N33 | | |

ILLINOIS FED. AID PROJECT

NOTE:

1) ALL FIBER OPTIC JUMP CABLES SHALL BE LC-LC CONNECTOR TYPE UNLESS APPROVED BY THE ENGINEER. NO ADAPTERS OR CONVERSION DEVICES WILL BE ALLOWED.

**IL 64 (NORTH AVENUE)**
**AT WEST AVE**

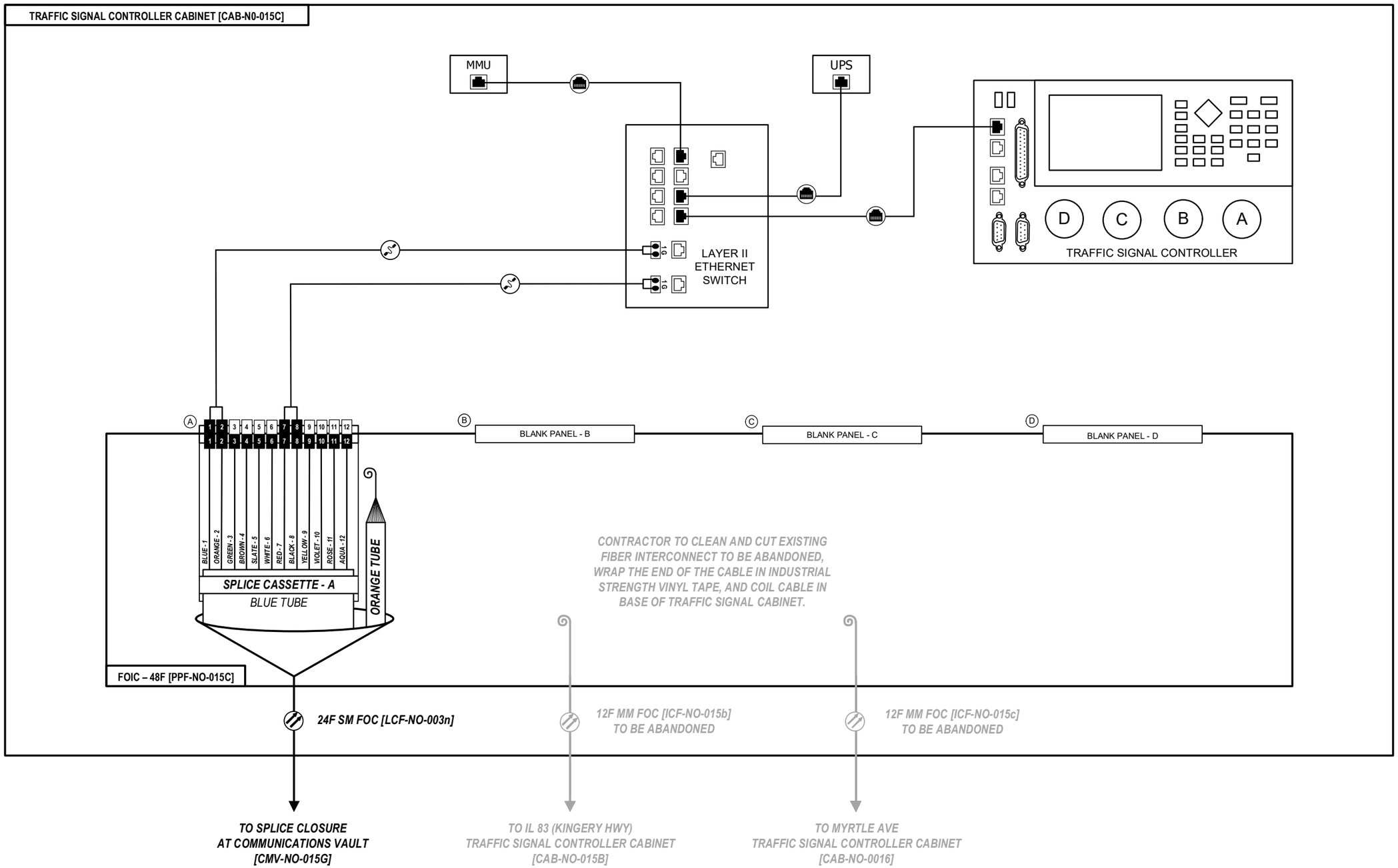


D108121-ahl-comm.visio

Kimley»Horn

| | | |
|---|---|---|
| USER NAME = | DESIGNED - | REVISED - |
| | DRAWN - | REVISED - |
| PLOT SCALE = N.T.S. | CHECKED - | REVISED - |
| PLOT DATE = | DATE - | REVISED - |

**STATE OF ILLINOIS**
**DEPARTMENT OF TRANSPORTATION**

**FIBER SPLICING AND CABINET CONNECTION DETAILS**
**TRAFFIC SIGNAL CONTROLLER CABINET [CAB-NO-015C]**

SCALE: SHEET OF SHEETS STA. TO STA.

| F.A.P. RTE. | SECTION | COUNTY | TOTAL SHEETS | SHEET NO. |
|---|---|---|---|---|
| 307 | 2020-263-SUR,SW&TS | DUPAGE | 529 | 433 |
| | | CONTRACT NO. 62N33 | | |

ILLINOIS FED. AID PROJECT

NOTE:

1) ALL FIBER OPTIC JUMP CABLES SHALL BE LC-LC CONNECTOR TYPE UNLESS APPROVED BY THE ENGINEER. NO ADAPTERS OR CONVERSION DEVICES WILL BE ALLOWED.

**IL 64 (NORTH AVENUE)**
**AT MYRTLE AVE**

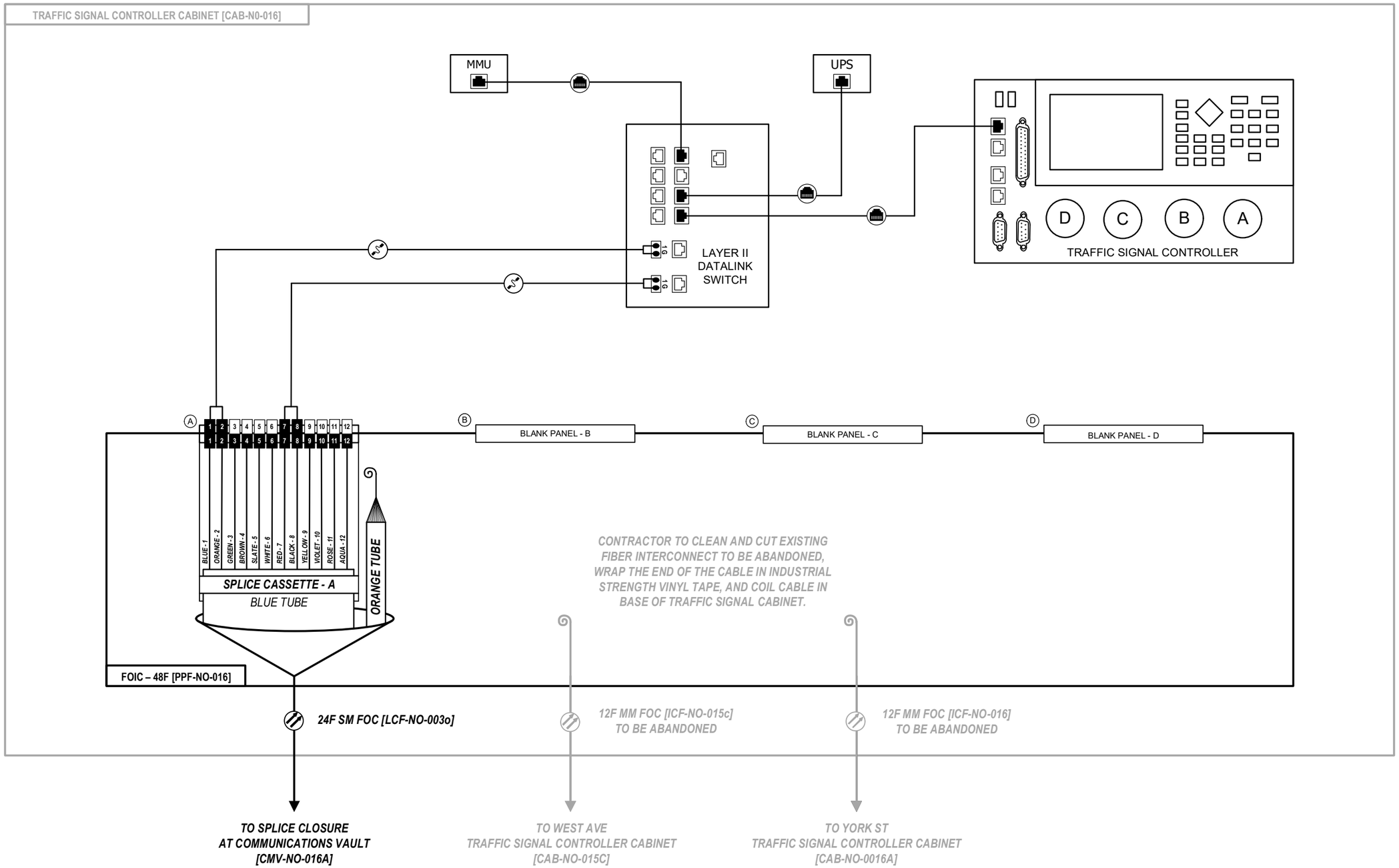


D108121-elt-comm-visio

Kimley»Horn

| | | |
|---|---|---|
| USER NAME = | DESIGNED - | REVISED - |
| | DRAWN - | REVISED - |
| PLOT SCALE = N.T.S. | CHECKED - | REVISED - |
| PLOT DATE = | DATE - | REVISED - |

**STATE OF ILLINOIS**
**DEPARTMENT OF TRANSPORTATION**

**FIBER SPLICING AND CABINET CONNECTION DETAILS**
**TRAFFIC SIGNAL CONTROLLER CABINET [CAB-NO-016]**

SCALE: SHEET OF SHEETS STA. TO STA.

| F.A.P. RTE. | SECTION | COUNTY | TOTAL SHEETS | SHEET NO. |
|---|---|---|---|---|
| 307 | 2020-263-SUR,SW&TS | DUPAGE | 529 | 434 |
| | | CONTRACT NO. 62N33 | | |

ILLINOIS FED. AID PROJECT

NOTE:

1) ALL FIBER OPTIC JUMP CABLES SHALL BE LC-LC CONNECTOR TYPE UNLESS APPROVED BY THE ENGINEER. NO ADAPTERS OR CONVERSION DEVICES WILL BE ALLOWED.

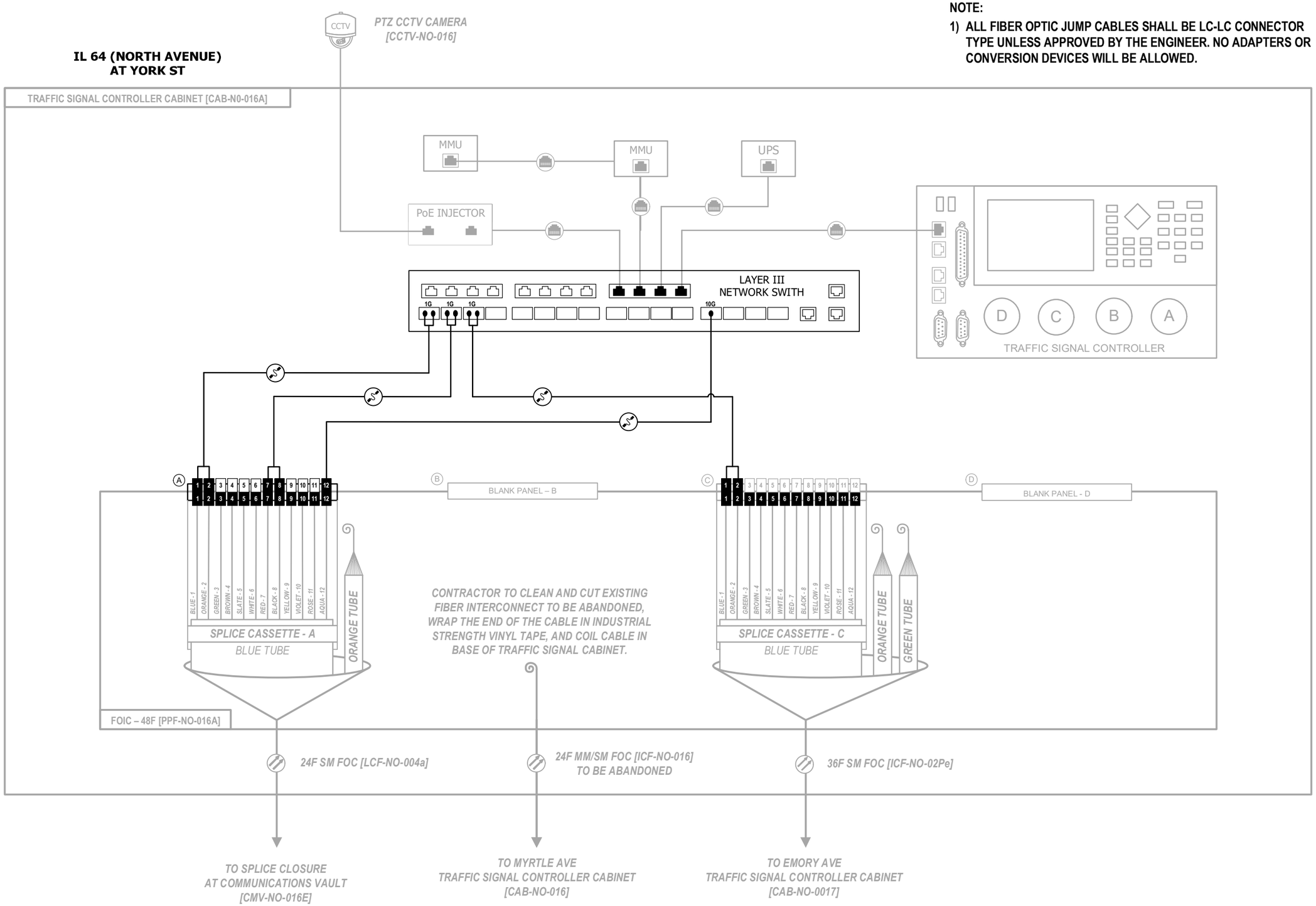


D108121-elt-comm-visio

Kimley»Horn

| | | |
|---|---|---|
| USER NAME = | DESIGNED - | REVISED - |
| | DRAWN - | REVISED - |
| PLOT SCALE = N.T.S. | CHECKED - | REVISED - |
| PLOT DATE = | DATE - | REVISED - |

**STATE OF ILLINOIS**
**DEPARTMENT OF TRANSPORTATION**

**FIBER SPLICING AND CABINET CONNECTION DETAILS**
**TRAFFIC SIGNAL CONTROLLER CABINET [CAB-NO-016A]**

SCALE: SHEET OF SHEETS STA. TO STA.

| F.A.P. RTE. | SECTION | COUNTY | TOTAL SHEETS | SHEET NO. |
|---|---|---|---|---|
| 307 | 2020-263-SUR,SW&TS | DUPAGE | 529 | 435 |
| | | CONTRACT NO. 62N33 | | |

ILLINOIS FED. AID PROJECT

TRUNK CABLE FIBER ASSIGNMENTS

TRUNK CABLE DESIGNATION: TCF-NO-002

ORIGINATION: CAB-NO-002C (IDOT COMMUNICATIONS NODE)

DESTINATION: CAB-NO-011C (IDOT COMMUNICATIONS NODE)

| BUFFER TUBE | FIBER | FIBER NO. | ASSIGNMENT |
|---|---|---|---|
| BLUE | Blue 1 | 1 | IL 59 NODE CABINET TO I-355 NODE CABINET (10G LINK) |
| | Orange 2 | 2 | DARK |
| | Green 3 | 3 | IL 59 NODE CABINET TO NORDIC TOWER CORE SWITCH (10G LINK) |
| | Brown 4 | 4 | DARK |
| | Slate 5 | 5 | IL 59 NODE CABINET TO HILLSIDE TOWER CORE SWITCH (10G LINK) |
| | White 6 | 6 | DARK |
| | Red 7 | 7 | DARK |
| | Black 8 | 8 | DARK |
| | Yellow 9 | 9 | DARK |
| | Violet 10 | 10 | DARK |
| | Rose 11 | 11 | DARK |
| | Aqua 12 | 12 | DARK |
| ORANGE | Blue 1 | 13 | DARK |
| | Orange 2 | 14 | DARK |
| | Green 3 | 15 | DARK |
| | Brown 4 | 16 | DARK |
| | Slate 5 | 17 | DARK |
| | White 6 | 18 | DARK |
| | Red 7 | 19 | DARK |
| | Black 8 | 20 | DARK |
| | Yellow 9 | 21 | DARK |
| | Violet 10 | 22 | DARK |
| | Rose 11 | 23 | DARK |
| | Aqua 12 | 24 | DARK |
| GREEN | Blue 1 | 25 | DARK |
| | Orange 2 | 26 | DARK |
| | Green 3 | 27 | DARK |
| | Brown 4 | 28 | DARK |
| | Slate 5 | 29 | DARK |
| | White 6 | 30 | DARK |
| | Red 7 | 31 | DARK |
| | Black 8 | 32 | DARK |
| | Yellow 9 | 33 | DARK |
| | Violet 10 | 34 | DARK |
| | Rose 11 | 35 | DARK |
| | Aqua 12 | 36 | DARK |
| BROWN | Blue 1 | 37 | DARK |
| | Orange 2 | 38 | DARK |
| | Green 3 | 39 | DARK |
| | Brown 4 | 40 | DARK |
| | Slate 5 | 41 | DARK |
| | White 6 | 42 | DARK |
| | Red 7 | 43 | DARK |
| | Black 8 | 44 | DARK |
| | Yellow 9 | 45 | DARK |
| | Violet 10 | 46 | DARK |
| | Rose 11 | 47 | DARK |
| | Aqua 12 | 48 | DARK |
| SLATE | Blue 1 | 49 | DARK |
| | Orange 2 | 50 | DARK |
| | Green 3 | 51 | DARK |
| | Brown 4 | 52 | DARK |
| | Slate 5 | 53 | DARK |
| | White 6 | 54 | DARK |
| | Red 7 | 55 | DARK |
| | Black 8 | 56 | DARK |
| | Yellow 9 | 57 | DARK |
| | Violet 10 | 58 | DARK |
| | Rose 11 | 59 | DARK |
| | Aqua 12 | 60 | DARK |
| WHITE | Blue 1 | 61 | DARK |
| | Orange 2 | 62 | DARK |
| | Green 3 | 63 | DARK |
| | Brown 4 | 64 | DARK |
| | Slate 5 | 65 | DARK |
| | White 6 | 66 | DARK |
| | Red 7 | 67 | DARK |
| | Black 8 | 68 | DARK |
| | Yellow 9 | 69 | DARK |
| | Violet 10 | 70 | DARK |
| | Rose 11 | 71 | DARK |
| | Aqua 12 | 72 | DARK |

| BUFFER TUBE | FIBER | FIBER NO. | ASSIGNMENT |
|---|---|---|---|
| RED | Blue 1 | 73 | DARK |
| | Orange 2 | 74 | DARK |
| | Green 3 | 75 | DARK |
| | Brown 4 | 76 | DARK |
| | Slate 5 | 77 | DARK |
| | White 6 | 78 | DARK |
| | Red 7 | 79 | DARK |
| | Black 8 | 80 | DARK |
| | Yellow 9 | 81 | DARK |
| | Violet 10 | 82 | DARK |
| | Rose 11 | 83 | DARK |
| | Aqua 12 | 84 | DARK |
| BLACK | Blue 1 | 85 | DARK |
| | Orange 2 | 86 | DARK |
| | Green 3 | 87 | DARK |
| | Brown 4 | 88 | DARK |
| | Slate 5 | 89 | DARK |
| | White 6 | 90 | DARK |
| | Red 7 | 91 | DARK |
| | Black 8 | 92 | DARK |
| | Yellow 9 | 93 | DARK |
| | Violet 10 | 94 | DARK |
| | Rose 11 | 95 | DARK |
| | Aqua 12 | 96 | DARK |
| YELLOW | Blue 1 | 97 | DARK |
| | Orange 2 | 98 | DARK |
| | Green 3 | 99 | DARK |
| | Brown 4 | 100 | DARK |
| | Slate 5 | 101 | DARK |
| | White 6 | 102 | DARK |
| | Red 7 | 103 | DARK |
| | Black 8 | 104 | DARK |
| | Yellow 9 | 105 | DARK |
| | Violet 10 | 106 | DARK |
| | Rose 11 | 107 | DARK |
| | Aqua 12 | 108 | DARK |
| VIOLET | Blue 1 | 109 | DARK |
| | Orange 2 | 110 | DARK |
| | Green 3 | 111 | DARK |
| | Brown 4 | 112 | DARK |
| | Slate 5 | 113 | DARK |
| | White 6 | 114 | DARK |
| | Red 7 | 115 | DARK |
| | Black 8 | 116 | DARK |
| | Yellow 9 | 117 | DARK |
| | Violet 10 | 118 | DARK |
| | Rose 11 | 119 | DARK |
| | Aqua 12 | 120 | DARK |
| ROSE | Blue 1 | 121 | DARK |
| | Orange 2 | 122 | DARK |
| | Green 3 | 123 | DARK |
| | Brown 4 | 124 | DARK |
| | Slate 5 | 125 | DARK |
| | White 6 | 126 | DARK |
| | Red 7 | 127 | DARK |
| | Black 8 | 128 | DARK |
| | Yellow 9 | 129 | DARK |
| | Violet 10 | 130 | DARK |
| | Rose 11 | 131 | DARK |
| | Aqua 12 | 132 | DARK |
| AQUA | Blue 1 | 133 | DARK |
| | Orange 2 | 134 | DARK |
| | Green 3 | 135 | DARK |
| | Brown 4 | 136 | DARK |
| | Slate 5 | 137 | DARK |
| | White 6 | 138 | DARK |
| | Red 7 | 139 | DARK |
| | Black 8 | 140 | DARK |
| | Yellow 9 | 141 | DARK |
| | Violet 10 | 142 | DARK |
| | Rose 11 | 143 | DARK |
| | Aqua 12 | 144 | DARK |

MODEL: Default
FILE NAME: pw:\\ih-pw.bentley.com:ih-pw01\Documents\01 Active Projects\MW-CHS-1698959100 - IL 64/Phase III\2 Design\CADD\Plan Sheets\Communications\West Corridor\010821-sht-comm-trunk-01_RHA.dgn

Kimley»Horn
© 2022 KIMLEY-HORN AND ASSOCIATES, INC.
4201 WINFIELD ROAD, SUITE 600
WARRENVILLE, IL 60555
PHONE: 630-487-5550
WWW.KIMLEY-HORN.COM

| | | |
|---|---|---|
| USER NAME = | DESIGNED - | REVISED - |
| | DRAWN - | REVISED - |
| PLOT SCALE = | CHECKED - | REVISED - |
| PLOT DATE = | DATE - | REVISED - |

STATE OF ILLINOIS
DEPARTMENT OF TRANSPORTATION

FIBER OPTIC TRUNK CABLE SPLICE ASSIGNMENTS
TCF–NO–002

SCALE: SHEET OF SHEETS STA. TO STA.

| F.A.P. RTE. | SECTION | COUNTY | TOTAL SHEETS | SHEET NO. |
|---|---|---|---|---|
| 307 | 2020-263-SUR,SW&TS | DUPAGE | 529 | 436 |
| | | CONTRACT NO. 62N33 | | |
| | ILLINOIS | FED. AID PROJECT | | |

TRUNK CABLE FIBER ASSIGNMENTS

TRUNK CABLE DESIGNATION: TCF-NO-003

ORIGINATION: CAB-NO-011C (IDOT COMMUNICATIONS NODE)

DESTINATION: CAB-NO-017C (IDOT COMMUNICATIONS NODE)

| BUFFER TUBE | FIBER | FIBER NO. | ASSIGNMENT |
|---|---|---|---|
| BLUE | Blue 1 | 1 | IL 53 NODE CABINET TO I-290 NODE CABINET (10G LINK) |
| | Orange 2 | 2 | DARK |
| | Green 3 | 3 | IL 59 NODE CABINET TO NORDIC TOWER CORE SWITCH (10G LINK) |
| | Brown 4 | 4 | DARK |
| | Slate 5 | 5 | IL 59 NODE CABINET TO HILLSIDE TOWER CORE SWITCH (10G LINK) |
| | White 6 | 6 | DARK |
| | Red 7 | 7 | DARK |
| | Black 8 | 8 | DARK |
| | Yellow 9 | 9 | DARK |
| | Violet 10 | 10 | DARK |
| | Rose 11 | 11 | DARK |
| | Aqua 12 | 12 | DARK |
| ORANGE | Blue 1 | 13 | DARK |
| | Orange 2 | 14 | DARK |
| | Green 3 | 15 | DARK |
| | Brown 4 | 16 | DARK |
| | Slate 5 | 17 | DARK |
| | White 6 | 18 | DARK |
| | Red 7 | 19 | DARK |
| | Black 8 | 20 | DARK |
| | Yellow 9 | 21 | DARK |
| | Violet 10 | 22 | DARK |
| | Rose 11 | 23 | DARK |
| | Aqua 12 | 24 | DARK |
| GREEN | Blue 1 | 25 | DARK |
| | Orange 2 | 26 | DARK |
| | Green 3 | 27 | DARK |
| | Brown 4 | 28 | DARK |
| | Slate 5 | 29 | DARK |
| | White 6 | 30 | DARK |
| | Red 7 | 31 | DARK |
| | Black 8 | 32 | DARK |
| | Yellow 9 | 33 | DARK |
| | Violet 10 | 34 | DARK |
| | Rose 11 | 35 | DARK |
| | Aqua 12 | 36 | DARK |
| BROWN | Blue 1 | 37 | DARK |
| | Orange 2 | 38 | DARK |
| | Green 3 | 39 | DARK |
| | Brown 4 | 40 | DARK |
| | Slate 5 | 41 | DARK |
| | White 6 | 42 | DARK |
| | Red 7 | 43 | DARK |
| | Black 8 | 44 | DARK |
| | Yellow 9 | 45 | DARK |
| | Violet 10 | 46 | DARK |
| | Rose 11 | 47 | DARK |
| | Aqua 12 | 48 | DARK |
| SLATE | Blue 1 | 49 | DARK |
| | Orange 2 | 50 | DARK |
| | Green 3 | 51 | DARK |
| | Brown 4 | 52 | DARK |
| | Slate 5 | 53 | DARK |
| | White 6 | 54 | DARK |
| | Red 7 | 55 | DARK |
| | Black 8 | 56 | DARK |
| | Yellow 9 | 57 | DARK |
| | Violet 10 | 58 | DARK |
| | Rose 11 | 59 | DARK |
| | Aqua 12 | 60 | DARK |
| WHITE | Blue 1 | 61 | DARK |
| | Orange 2 | 62 | DARK |
| | Green 3 | 63 | DARK |
| | Brown 4 | 64 | DARK |
| | Slate 5 | 65 | DARK |
| | White 6 | 66 | DARK |
| | Red 7 | 67 | DARK |
| | Black 8 | 68 | DARK |
| | Yellow 9 | 69 | DARK |
| | Violet 10 | 70 | DARK |
| | Rose 11 | 71 | DARK |
| | Aqua 12 | 72 | DARK |

| BUFFER TUBE | FIBER | FIBER NO. | ASSIGNMENT |
|---|---|---|---|
| RED | Blue 1 | 73 | DARK |
| | Orange 2 | 74 | DARK |
| | Green 3 | 75 | DARK |
| | Brown 4 | 76 | DARK |
| | Slate 5 | 77 | DARK |
| | White 6 | 78 | DARK |
| | Red 7 | 79 | DARK |
| | Black 8 | 80 | DARK |
| | Yellow 9 | 81 | DARK |
| | Violet 10 | 82 | DARK |
| | Rose 11 | 83 | DARK |
| | Aqua 12 | 84 | DARK |
| BLACK | Blue 1 | 85 | DARK |
| | Orange 2 | 86 | DARK |
| | Green 3 | 87 | DARK |
| | Brown 4 | 88 | DARK |
| | Slate 5 | 89 | DARK |
| | White 6 | 90 | DARK |
| | Red 7 | 91 | DARK |
| | Black 8 | 92 | DARK |
| | Yellow 9 | 93 | DARK |
| | Violet 10 | 94 | DARK |
| | Rose 11 | 95 | DARK |
| | Aqua 12 | 96 | DARK |
| YELLOW | Blue 1 | 97 | DARK |
| | Orange 2 | 98 | DARK |
| | Green 3 | 99 | DARK |
| | Brown 4 | 100 | DARK |
| | Slate 5 | 101 | DARK |
| | White 6 | 102 | DARK |
| | Red 7 | 103 | DARK |
| | Black 8 | 104 | DARK |
| | Yellow 9 | 105 | DARK |
| | Violet 10 | 106 | DARK |
| | Rose 11 | 107 | DARK |
| | Aqua 12 | 108 | DARK |
| VIOLET | Blue 1 | 109 | DARK |
| | Orange 2 | 110 | DARK |
| | Green 3 | 111 | DARK |
| | Brown 4 | 112 | DARK |
| | Slate 5 | 113 | DARK |
| | White 6 | 114 | DARK |
| | Red 7 | 115 | DARK |
| | Black 8 | 116 | DARK |
| | Yellow 9 | 117 | DARK |
| | Violet 10 | 118 | DARK |
| | Rose 11 | 119 | DARK |
| | Aqua 12 | 120 | DARK |
| ROSE | Blue 1 | 121 | DARK |
| | Orange 2 | 122 | DARK |
| | Green 3 | 123 | DARK |
| | Brown 4 | 124 | DARK |
| | Slate 5 | 125 | DARK |
| | White 6 | 126 | DARK |
| | Red 7 | 127 | DARK |
| | Black 8 | 128 | DARK |
| | Yellow 9 | 129 | DARK |
| | Violet 10 | 130 | DARK |
| | Rose 11 | 131 | DARK |
| | Aqua 12 | 132 | DARK |
| AQUA | Blue 1 | 133 | DARK |
| | Orange 2 | 134 | DARK |
| | Green 3 | 135 | DARK |
| | Brown 4 | 136 | DARK |
| | Slate 5 | 137 | DARK |
| | White 6 | 138 | DARK |
| | Red 7 | 139 | DARK |
| | Black 8 | 140 | DARK |
| | Yellow 9 | 141 | DARK |
| | Violet 10 | 142 | DARK |
| | Rose 11 | 143 | DARK |
| | Aqua 12 | 144 | DARK |

MODEL: Default
FILE NAME: pw:\\ih-pw.bentley.com:ih-pw-01\Documents\01 Active Projects\IWI-CHS-168959100 - IL 64\Phase III\2 Design\CAD\Plan Sheets\Communications\West Corridor\D1082 I-ihl-comm-trunk-02_KHA.dgn

Kimley»Horn
© 2022 KIMLEY-HORN AND ASSOCIATES, INC.
4201 WINFIELD ROAD, SUITE 600
WARRENVILLE, IL 60555
PHONE: 630-487-5550
WWW.KIMLEY-HORN.COM

| | | | |
|---|---|---|---|
| USER NAME = | DESIGNED - | REVISED - | |
| | DRAWN - | REVISED - | |
| PLOT SCALE = | CHECKED - | REVISED - | |
| PLOT DATE = | DATE - | REVISED - | |

STATE OF ILLINOIS
DEPARTMENT OF TRANSPORTATION

FIBER OPTIC TRUNK CABLE SPLICE ASSIGNMENTS
TCF–NO–003

SCALE: | SHEET OF SHEETS | STA. TO STA.

| F.A.P. RTE. | SECTION | COUNTY | TOTAL SHEETS | SHEET NO. |
|---|---|---|---|---|
| 307 | 2020-263-SUR,SW&TS | DUPAGE | 529 | 437 |
| | | CONTRACT NO. 62N33 | | |
| | ILLINOIS | FED. AID PROJECT | | |

| DISTRIBUTION CABLE FIBER ASSIGNMENTS | | | | ORIGINATION | CAB-NO-000 (SMITH RD / KAUTZ RD TRAFFC SIGNAL CABINET) | | |
|---|---|---|---|---|---|---|---|
| DISTRIBUTION CABLE DESIGNATION | | | DCF-NO-001 | DESTINATION | CAB-NO-002E (IDOT COMMUNICATIONS NODE AT IL 59) | | |
| BUFFER TUBE | FIBER | FIBER NO. | ASSIGNMENT | BUFFER TUBE | FIBER | FIBER NO. | ASSIGNMENT |
| BLUE | Blue 1 | 1 | TRAFFIC SIGNAL CONTROLLER CABINET CAB-NO-000 | RED | Blue 1 | 73 | DARK |
| | Orange 2 | 2 | TRAFFIC SIGNAL CONTROLLER CABINET CAB-NO-000 | | Orange 2 | 74 | DARK |
| | Green 3 | 3 | TRAFFIC SIGNAL CONTROLLER CABINET CAB-NO-000A | | Green 3 | 75 | DARK |
| | Brown 4 | 4 | TRAFFIC SIGNAL CONTROLLER CABINET CAB-NO-000A | | Brown 4 | 76 | DARK |
| | Slate 5 | 5 | TRAFFIC SIGNAL CONTROLLER CABINET CAB-NO-001 | | Slate 5 | 77 | DARK |
| | White 6 | 6 | TRAFFIC SIGNAL CONTROLLER CABINET CAB-NO-001 | | White 6 | 78 | DARK |
| | Red 7 | 7 | TRAFFIC SIGNAL CONTROLLER CABINET CAB-NO-002 | | Red 7 | 79 | DARK |
| | Black 8 | 8 | TRAFFIC SIGNAL CONTROLLER CABINET CAB-NO-002 | | Black 8 | 80 | DARK |
| | Yellow 9 | 9 | TRAFFIC SIGNAL CONTROLLER CABINET CAB-NO-002A | | Yellow 9 | 81 | DARK |
| | Violet 10 | 10 | TRAFFIC SIGNAL CONTROLLER CABINET CAB-NO-002A | | Violet 10 | 82 | DARK |
| | Rose 11 | 11 | TRAFFIC SIGNAL CONTROLLER CABINET CAB-NO-002B | | Rose 11 | 83 | DARK |
| | Aqua 12 | 12 | TRAFFIC SIGNAL CONTROLLER CABINET CAB-NO-002B | | Aqua 12 | 84 | DARK |
| ORANGE | Blue 1 | 13 | DARK | BLACK | Blue 1 | 85 | DARK |
| | Orange 2 | 14 | DARK | | Orange 2 | 86 | DARK |
| | Green 3 | 15 | DARK | | Green 3 | 87 | DARK |
| | Brown 4 | 16 | DARK | | Brown 4 | 88 | DARK |
| | Slate 5 | 17 | DARK | | Slate 5 | 89 | DARK |
| | White 6 | 18 | DARK | | White 6 | 90 | DARK |
| | Red 7 | 19 | DARK | | Red 7 | 91 | DARK |
| | Black 8 | 20 | DARK | | Black 8 | 92 | DARK |
| | Yellow 9 | 21 | DARK | | Yellow 9 | 93 | DARK |
| | Violet 10 | 22 | DARK | | Violet 10 | 94 | DARK |
| | Rose 11 | 23 | DARK | | Rose 11 | 95 | DARK |
| | Aqua 12 | 24 | DARK | | Aqua 12 | 96 | DARK |
| GREEN | Blue 1 | 25 | DARK | YELLOW | Blue 1 | 97 | DARK |
| | Orange 2 | 26 | DARK | | Orange 2 | 98 | DARK |
| | Green 3 | 27 | DARK | | Green 3 | 99 | DARK |
| | Brown 4 | 28 | DARK | | Brown 4 | 100 | DARK |
| | Slate 5 | 29 | DARK | | Slate 5 | 101 | DARK |
| | White 6 | 30 | DARK | | White 6 | 102 | DARK |
| | Red 7 | 31 | DARK | | Red 7 | 103 | DARK |
| | Black 8 | 32 | DARK | | Black 8 | 104 | DARK |
| | Yellow 9 | 33 | DARK | | Yellow 9 | 105 | DARK |
| | Violet 10 | 34 | DARK | | Violet 10 | 106 | DARK |
| | Rose 11 | 35 | DARK | | Rose 11 | 107 | DARK |
| | Aqua 12 | 36 | DARK | | Aqua 12 | 108 | DARK |
| BROWN | Blue 1 | 37 | DARK | VIOLET | Blue 1 | 109 | DARK |
| | Orange 2 | 38 | DARK | | Orange 2 | 110 | DARK |
| | Green 3 | 39 | DARK | | Green 3 | 111 | DARK |
| | Brown 4 | 40 | DARK | | Brown 4 | 112 | DARK |
| | Slate 5 | 41 | DARK | | Slate 5 | 113 | DARK |
| | White 6 | 42 | DARK | | White 6 | 114 | DARK |
| | Red 7 | 43 | DARK | | Red 7 | 115 | DARK |
| | Black 8 | 44 | DARK | | Black 8 | 116 | DARK |
| | Yellow 9 | 45 | DARK | | Yellow 9 | 117 | DARK |
| | Violet 10 | 46 | DARK | | Violet 10 | 118 | DARK |
| | Rose 11 | 47 | DARK | | Rose 11 | 119 | DARK |
| | Aqua 12 | 48 | DARK | | Aqua 12 | 120 | DARK |
| SLATE | Blue 1 | 49 | DARK | ROSE | Blue 1 | 121 | DARK |
| | Orange 2 | 50 | DARK | | Orange 2 | 122 | DARK |
| | Green 3 | 51 | DARK | | Green 3 | 123 | DARK |
| | Brown 4 | 52 | DARK | | Brown 4 | 124 | DARK |
| | Slate 5 | 53 | DARK | | Slate 5 | 125 | DARK |
| | White 6 | 54 | DARK | | White 6 | 126 | DARK |
| | Red 7 | 55 | SMITH RD / KAUTZ RD LAYER III SWITCH TO IL 59 CORE SWITCH (10G LINK) | | Red 7 | 127 | DARK |
| | Black 8 | 56 | DARK | | Black 8 | 128 | DARK |
| | Yellow 9 | 57 | DARK | | Yellow 9 | 129 | DARK |
| | Violet 10 | 58 | DARK | | Violet 10 | 130 | DARK |
| | Rose 11 | 59 | DARK | | Rose 11 | 131 | DARK |
| | Aqua 12 | 60 | DARK | | Aqua 12 | 132 | DARK |
| WHITE | Blue 1 | 61 | DARK | AQUA | Blue 1 | 133 | DARK |
| | Orange 2 | 62 | DARK | | Orange 2 | 134 | DARK |
| | Green 3 | 63 | DARK | | Green 3 | 135 | DARK |
| | Brown 4 | 64 | DARK | | Brown 4 | 136 | DARK |
| | Slate 5 | 65 | DARK | | Slate 5 | 137 | DARK |
| | White 6 | 66 | DARK | | White 6 | 138 | DARK |
| | Red 7 | 67 | DARK | | Red 7 | 139 | DARK |
| | Black 8 | 68 | DARK | | Black 8 | 140 | DARK |
| | Yellow 9 | 69 | DARK | | Yellow 9 | 141 | DARK |
| | Violet 10 | 70 | DARK | | Violet 10 | 142 | DARK |
| | Rose 11 | 71 | DARK | | Rose 11 | 143 | DARK |
| | Aqua 12 | 72 | DARK | | Aqua 12 | 144 | DARK |

MODEL: Default
FILE NAME: pw:\\ih-pw.bentley.com:ih-pw-01\Documents\01 Active Projects\NV-CHS-1589591\00 - IL 64\Phase II\2 Design\CAD\Plan Sheets\Communications\West Corridor\D1082 I-chs-comm-dis-01_KHA.dgn

Kimley»Horn
© 2022 KIMLEY-HORN AND ASSOCIATES, INC.
4201 WINFIELD ROAD, SUITE 600
WARRENVILLE, IL 60555
PHONE: 630-487-5550
WWW.KIMLEY-HORN.COM

| USER NAME = | DESIGNED - | REVISED - |
|---|---|---|
| | DRAWN - | REVISED - |
| PLOT SCALE = | CHECKED - | REVISED - |
| PLOT DATE = | DATE - | REVISED - |

**STATE OF ILLINOIS**
**DEPARTMENT OF TRANSPORTATION**

**FIBER OPTIC DISTRIBUTION CABLE SPLICE ASSIGNMENTS**
**DCF–NO–001**

SCALE: | SHEET OF SHEETS | STA. TO STA.

| F.A.P. RTE. | SECTION | COUNTY | TOTAL SHEETS | SHEET NO. |
|---|---|---|---|---|
| 307 | 2020-263-SUR,SW&TS | DUPAGE | 529 | 438 |
| | | CONTRACT NO. 62N33 | | |
| | ILLINOIS | FED. AID PROJECT | | |

DISTRIBUTION CABLE FIBER ASSIGNMENTS

DISTRIBUTION CABLE DESIGNATION: DCF-NO-001

| BUFFER TUBE | FIBER | FIBER NO. | ASSIGNMENT |
|---|---|---|---|
| BLUE | Blue 1 | 1 | TRAFFIC SIGNAL CONTROLLER CABINET CAB-NO-000 |
| | Orange 2 | 2 | TRAFFIC SIGNAL CONTROLLER CABINET CAB-NO-000 |
| | Green 3 | 3 | TRAFFIC SIGNAL CONTROLLER CABINET CAB-NO-000A |
| | Brown 4 | 4 | TRAFFIC SIGNAL CONTROLLER CABINET CAB-NO-000A |
| | Slate 5 | 5 | TRAFFIC SIGNAL CONTROLLER CABINET CAB-NO-001 |
| | White 6 | 6 | TRAFFIC SIGNAL CONTROLLER CABINET CAB-NO-001 |
| | Red 7 | 7 | TRAFFIC SIGNAL CONTROLLER CABINET CAB-NO-002 |
| | Black 8 | 8 | TRAFFIC SIGNAL CONTROLLER CABINET CAB-NO-002 |
| | Yellow 9 | 9 | TRAFFIC SIGNAL CONTROLLER CABINET CAB-NO-002A |
| | Violet 10 | 10 | TRAFFIC SIGNAL CONTROLLER CABINET CAB-NO-002A |
| | Rose 11 | 11 | TRAFFIC SIGNAL CONTROLLER CABINET CAB-NO-002B |
| | Aqua 12 | 12 | TRAFFIC SIGNAL CONTROLLER CABINET CAB-NO-002B |
| ORANGE | Blue 1 | 13 | DARK |
| | Orange 2 | 14 | DARK |
| | Green 3 | 15 | DARK |
| | Brown 4 | 16 | DARK |
| | Slate 5 | 17 | DARK |
| | White 6 | 18 | DARK |
| | Red 7 | 19 | DARK |
| | Black 8 | 20 | DARK |
| | Yellow 9 | 21 | DARK |
| | Violet 10 | 22 | DARK |
| | Rose 11 | 23 | DARK |
| | Aqua 12 | 24 | DARK |
| GREEN | Blue 1 | 25 | DARK |
| | Orange 2 | 26 | DARK |
| | Green 3 | 27 | DARK |
| | Brown 4 | 28 | DARK |
| | Slate 5 | 29 | DARK |
| | White 6 | 30 | DARK |
| | Red 7 | 31 | DARK |
| | Black 8 | 32 | DARK |
| | Yellow 9 | 33 | DARK |
| | Violet 10 | 34 | DARK |
| | Rose 11 | 35 | DARK |
| | Aqua 12 | 36 | DARK |
| BROWN | Blue 1 | 37 | DARK |
| | Orange 2 | 38 | DARK |
| | Green 3 | 39 | DARK |
| | Brown 4 | 40 | DARK |
| | Slate 5 | 41 | DARK |
| | White 6 | 42 | DARK |
| | Red 7 | 43 | DARK |
| | Black 8 | 44 | DARK |
| | Yellow 9 | 45 | DARK |
| | Violet 10 | 46 | DARK |
| | Rose 11 | 47 | DARK |
| | Aqua 12 | 48 | DARK |
| SLATE | Blue 1 | 49 | DARK |
| | Orange 2 | 50 | DARK |
| | Green 3 | 51 | DARK |
| | Brown 4 | 52 | DARK |
| | Slate 5 | 53 | DARK |
| | White 6 | 54 | DARK |
| | Red 7 | 55 | SMITH RD / KAUTZ RD LAYER III SWITCH TO IL 59 CORE SWITCH (10G LINK) |
| | Black 8 | 56 | DARK |
| | Yellow 9 | 57 | DARK |
| | Violet 10 | 58 | DARK |
| | Rose 11 | 59 | DARK |
| | Aqua 12 | 60 | DARK |
| WHITE | Blue 1 | 61 | DARK |
| | Orange 2 | 62 | DARK |
| | Green 3 | 63 | DARK |
| | Brown 4 | 64 | DARK |
| | Slate 5 | 65 | DARK |
| | White 6 | 66 | DARK |
| | Red 7 | 67 | DARK |
| | Black 8 | 68 | DARK |
| | Yellow 9 | 69 | DARK |
| | Violet 10 | 70 | DARK |
| | Rose 11 | 71 | DARK |
| | Aqua 12 | 72 | DARK |

ORIGINATION: CAB-NO-000 (SMITH RD / KAUTZ RD TRAFFC SIGNAL CABINET)

DESTINATION: CAB-NO-002E (IDOT COMMUNICATIONS NODE AT IL 59)

| BUFFER TUBE | FIBER | FIBER NO. | ASSIGNMENT |
|---|---|---|---|
| RED | Blue 1 | 73 | DARK |
| | Orange 2 | 74 | DARK |
| | Green 3 | 75 | DARK |
| | Brown 4 | 76 | DARK |
| | Slate 5 | 77 | DARK |
| | White 6 | 78 | DARK |
| | Red 7 | 79 | DARK |
| | Black 8 | 80 | DARK |
| | Yellow 9 | 81 | DARK |
| | Violet 10 | 82 | DARK |
| | Rose 11 | 83 | DARK |
| | Aqua 12 | 84 | DARK |
| BLACK | Blue 1 | 85 | DARK |
| | Orange 2 | 86 | DARK |
| | Green 3 | 87 | DARK |
| | Brown 4 | 88 | DARK |
| | Slate 5 | 89 | DARK |
| | White 6 | 90 | DARK |
| | Red 7 | 91 | DARK |
| | Black 8 | 92 | DARK |
| | Yellow 9 | 93 | DARK |
| | Violet 10 | 94 | DARK |
| | Rose 11 | 95 | DARK |
| | Aqua 12 | 96 | DARK |
| YELLOW | Blue 1 | 97 | DARK |
| | Orange 2 | 98 | DARK |
| | Green 3 | 99 | DARK |
| | Brown 4 | 100 | DARK |
| | Slate 5 | 101 | DARK |
| | White 6 | 102 | DARK |
| | Red 7 | 103 | DARK |
| | Black 8 | 104 | DARK |
| | Yellow 9 | 105 | DARK |
| | Violet 10 | 106 | DARK |
| | Rose 11 | 107 | DARK |
| | Aqua 12 | 108 | DARK |
| VIOLET | Blue 1 | 109 | DARK |
| | Orange 2 | 110 | DARK |
| | Green 3 | 111 | DARK |
| | Brown 4 | 112 | DARK |
| | Slate 5 | 113 | DARK |
| | White 6 | 114 | DARK |
| | Red 7 | 115 | DARK |
| | Black 8 | 116 | DARK |
| | Yellow 9 | 117 | DARK |
| | Violet 10 | 118 | DARK |
| | Rose 11 | 119 | DARK |
| | Aqua 12 | 120 | DARK |
| ROSE | Blue 1 | 121 | DARK |
| | Orange 2 | 122 | DARK |
| | Green 3 | 123 | DARK |
| | Brown 4 | 124 | DARK |
| | Slate 5 | 125 | DARK |
| | White 6 | 126 | DARK |
| | Red 7 | 127 | DARK |
| | Black 8 | 128 | DARK |
| | Yellow 9 | 129 | DARK |
| | Violet 10 | 130 | DARK |
| | Rose 11 | 131 | DARK |
| | Aqua 12 | 132 | DARK |
| AQUA | Blue 1 | 133 | DARK |
| | Orange 2 | 134 | DARK |
| | Green 3 | 135 | DARK |
| | Brown 4 | 136 | DARK |
| | Slate 5 | 137 | DARK |
| | White 6 | 138 | DARK |
| | Red 7 | 139 | DARK |
| | Black 8 | 140 | DARK |
| | Yellow 9 | 141 | DARK |
| | Violet 10 | 142 | DARK |
| | Rose 11 | 143 | DARK |
| | Aqua 12 | 144 | DARK |

MODEL: Default
FILE NAME: pw:\\ih-pw.bentley.com:ih-pw-01\Documents\01 Active Projects\IW-CHS-1\59959100 - IL 64\Phase III\2 Design\CAD\Plan Sheets\Communications\West Corridor\D1082 I-ihl-comm-dfc-02_KHA.dgn

Kimley»Horn
© 2022 KIMLEY-HORN AND ASSOCIATES, INC.
4001 WHITE OAK ROAD, SUITE 160
WARRENVILLE, IL 60555
PHONE: 630-487-5550
WWW.KIMLEYHORN.COM

| | | |
|---|---|---|
| USER NAME = | DESIGNED - | REVISED - |
| | DRAWN - | REVISED - |
| PLOT SCALE = | CHECKED - | REVISED - |
| PLOT DATE = | DATE - | REVISED - |

STATE OF ILLINOIS
DEPARTMENT OF TRANSPORTATION

FIBER OPTIC DISTRIBUTION CABLE SPLICE ASSIGNMENTS
DCF–NO–002

SCALE: | SHEET OF SHEETS | STA. TO STA.

| F.A.P. RTE. | SECTION | COUNTY | TOTAL SHEETS | SHEET NO. |
|---|---|---|---|---|
| 307 | 2020-263-SUR,SW&TS | DUPAGE | 529 | 439 |
| | | CONTRACT NO. 62N33 | | |
| | ILLINOIS | FED. AID PROJECT | | |

| DISTRIBUTION CABLE FIBER ASSIGNMENTS | | | | ORIGINATION | CAB-NO-011E (IDOT COMMUNICATIONS NODE AT IL 53) | | |
|---|---|---|---|---|---|---|---|
| DISTRIBUTION CABLE DESIGNATION | | | DCF-NO-003 | DESTINATION | CAB-NO-017C (IDOT COMMUNICATIONS NODE AT I-290) | | |
| BUFFER TUBE | FIBER | FIBER NO. | ASSIGNMENT | BUFFER TUBE | FIBER | FIBER NO. | ASSIGNMENT |
| BLUE | Blue 1 | 1 | DARK | RED | Blue 1 | 73 | DARK |
| | Orange 2 | 2 | DARK | | Orange 2 | 74 | DARK |
| | Green 3 | 3 | DARK | | Green 3 | 75 | DARK |
| | Brown 4 | 4 | DARK | | Brown 4 | 76 | DARK |
| | Slate 5 | 5 | DARK | | Slate 5 | 77 | DARK |
| | White 6 | 6 | DARK | | White 6 | 78 | DARK |
| | Red 7 | 7 | DARK | | Red 7 | 79 | DARK |
| | Black 8 | 8 | DARK | | Black 8 | 80 | DARK |
| | Yellow 9 | 9 | TRAFFIC SIGNAL CONTROLLER CABINET CAB-NO-016 | | Yellow 9 | 81 | DARK |
| | Violet 10 | 10 | TRAFFIC SIGNAL CONTROLLER CABINET CAB-NO-016 | | Violet 10 | 82 | DARK |
| | Rose 11 | 11 | TRAFFIC SIGNAL CONTROLLER CABINET CAB-NO-016A | | Rose 11 | 83 | DARK |
| | Aqua 12 | 12 | TRAFFIC SIGNAL CONTROLLER CABINET CAB-NO-016A | | Aqua 12 | 84 | DARK |
| ORANGE | Blue 1 | 13 | TRAFFIC SIGNAL CONTROLLER CABINET CAB-NO-012A | BLACK | Blue 1 | 85 | DARK |
| | Orange 2 | 14 | TRAFFIC SIGNAL CONTROLLER CABINET CAB-NO-012A | | Orange 2 | 86 | DARK |
| | Green 3 | 15 | TRAFFIC SIGNAL CONTROLLER CABINET CAB-NO-012B | | Green 3 | 87 | DARK |
| | Brown 4 | 16 | TRAFFIC SIGNAL CONTROLLER CABINET CAB-NO-012B | | Brown 4 | 88 | DARK |
| | Slate 5 | 17 | TRAFFIC SIGNAL CONTROLLER CABINET CAB-NO-013 | | Slate 5 | 89 | DARK |
| | White 6 | 18 | TRAFFIC SIGNAL CONTROLLER CABINET CAB-NO-013 | | White 6 | 90 | DARK |
| | Red 7 | 19 | TRAFFIC SIGNAL CONTROLLER CABINET CAB-NO-013A | | Red 7 | 91 | DARK |
| | Black 8 | 20 | TRAFFIC SIGNAL CONTROLLER CABINET CAB-NO-013A | | Black 8 | 92 | DARK |
| | Yellow 9 | 21 | TRAFFIC SIGNAL CONTROLLER CABINET CAB-NO-013B | | Yellow 9 | 93 | DARK |
| | Violet 10 | 22 | TRAFFIC SIGNAL CONTROLLER CABINET CAB-NO-013B | | Violet 10 | 94 | DARK |
| | Rose 11 | 23 | TRAFFIC SIGNAL CONTROLLER CABINET CAB-NO-014 | | Rose 11 | 95 | DARK |
| | Aqua 12 | 24 | TRAFFIC SIGNAL CONTROLLER CABINET CAB-NO-014 | | Aqua 12 | 96 | DARK |
| GREEN | Blue 1 | 25 | TRAFFIC SIGNAL CONTROLLER CABINET CAB-NO-014A | YELLOW | Blue 1 | 97 | DARK |
| | Orange 2 | 26 | TRAFFIC SIGNAL CONTROLLER CABINET CAB-NO-014A | | Orange 2 | 98 | DARK |
| | Green 3 | 27 | TRAFFIC SIGNAL CONTROLLER CABINET CAB-NO-014B | | Green 3 | 99 | DARK |
| | Brown 4 | 28 | TRAFFIC SIGNAL CONTROLLER CABINET CAB-NO-014B | | Brown 4 | 100 | DARK |
| | Slate 5 | 29 | TRAFFIC SIGNAL CONTROLLER CABINET CAB-NO-015 | | Slate 5 | 101 | DARK |
| | White 6 | 30 | TRAFFIC SIGNAL CONTROLLER CABINET CAB-NO-015 | | White 6 | 102 | DARK |
| | Red 7 | 31 | TRAFFIC SIGNAL CONTROLLER CABINET CAB-NO-015A | | Red 7 | 103 | DARK |
| | Black 8 | 32 | TRAFFIC SIGNAL CONTROLLER CABINET CAB-NO-015A | | Black 8 | 104 | DARK |
| | Yellow 9 | 33 | TRAFFIC SIGNAL CONTROLLER CABINET CAB-NO-015B | | Yellow 9 | 105 | DARK |
| | Violet 10 | 34 | TRAFFIC SIGNAL CONTROLLER CABINET CAB-NO-015B | | Violet 10 | 106 | DARK |
| | Rose 11 | 35 | TRAFFIC SIGNAL CONTROLLER CABINET CAB-NO-015C | | Rose 11 | 107 | DARK |
| | Aqua 12 | 36 | TRAFFIC SIGNAL CONTROLLER CABINET CAB-NO-015C | | Aqua 12 | 108 | DARK |
| BROWN | Blue 1 | 37 | DMS-NO-012 | VIOLET | Blue 1 | 109 | DARK |
| | Orange 2 | 38 | DMS-NO-012 | | Orange 2 | 110 | DARK |
| | Green 3 | 39 | DMS-NO-014 | | Green 3 | 111 | DARK |
| | Brown 4 | 40 | DMS-NO-014 | | Brown 4 | 112 | DARK |
| | Slate 5 | 41 | DARK | | Slate 5 | 113 | DARK |
| | White 6 | 42 | DARK | | White 6 | 114 | DARK |
| | Red 7 | 43 | DARK | | Red 7 | 115 | DARK |
| | Black 8 | 44 | DARK | | Black 8 | 116 | DARK |
| | Yellow 9 | 45 | DARK | | Yellow 9 | 117 | DARK |
| | Violet 10 | 46 | DARK | | Violet 10 | 118 | DARK |
| | Rose 11 | 47 | DARK | | Rose 11 | 119 | DARK |
| | Aqua 12 | 48 | DARK | | Aqua 12 | 120 | DARK |
| SLATE | Blue 1 | 49 | IL 59 CORE SWITCH SMITH TO I-290 CORE SWITCH (10G LINK) | ROSE | Blue 1 | 121 | DARK |
| | Orange 2 | 50 | DARK | | Orange 2 | 122 | DARK |
| | Green 3 | 51 | DARK | | Green 3 | 123 | DARK |
| | Brown 4 | 52 | DARK | | Brown 4 | 124 | DARK |
| | Slate 5 | 53 | DARK | | Slate 5 | 125 | DARK |
| | White 6 | 54 | DARK | | White 6 | 126 | DARK |
| | Red 7 | 55 | IL 59 CORE SWITCH SMITH TO I-290 CORE SWITCH (10G LINK) | | Red 7 | 127 | DARK |
| | Black 8 | 56 | DARK | | Black 8 | 128 | DARK |
| | Yellow 9 | 57 | DARK | | Yellow 9 | 129 | DARK |
| | Violet 10 | 58 | DARK | | Violet 10 | 130 | DARK |
| | Rose 11 | 59 | DARK | | Rose 11 | 131 | DARK |
| | Aqua 12 | 60 | DARK | | Aqua 12 | 132 | DARK |
| WHITE | Blue 1 | 61 | DARK | AQUA | Blue 1 | 133 | DARK |
| | Orange 2 | 62 | DARK | | Orange 2 | 134 | DARK |
| | Green 3 | 63 | DARK | | Green 3 | 135 | DARK |
| | Brown 4 | 64 | DARK | | Brown 4 | 136 | DARK |
| | Slate 5 | 65 | DARK | | Slate 5 | 137 | DARK |
| | White 6 | 66 | DARK | | White 6 | 138 | DARK |
| | Red 7 | 67 | DARK | | Red 7 | 139 | DARK |
| | Black 8 | 68 | DARK | | Black 8 | 140 | DARK |
| | Yellow 9 | 69 | DARK | | Yellow 9 | 141 | DARK |
| | Violet 10 | 70 | DARK | | Violet 10 | 142 | DARK |
| | Rose 11 | 71 | DARK | | Rose 11 | 143 | DARK |
| | Aqua 12 | 72 | DARK | | Aqua 12 | 144 | DARK |

MODEL: Default
FILE NAME: pw:\\uh-pw.bentley.com:dh-pw-01\Documents\01 Active Projects\IW-CHS-1\59959100 - IL 64\Phase III\2 Design\CAD\Plan Sheets\Communications\West Corridor\D1082 I-ihs-comm-dis-03_KHA.dgn

Kimley»Horn
© 2022 KIMLEY-HORN AND ASSOCIATES, INC.
4201 WINFIELD ROAD, SUITE 600
WARRENVILLE, IL 60555
PHONE: 630-487-5550
WWW.KIMLEY-HORN.COM

| USER NAME = | DESIGNED - | REVISED - |
|---|---|---|
| | DRAWN - | REVISED - |
| PLOT SCALE = | CHECKED - | REVISED - |
| PLOT DATE = | DATE - | REVISED - |

**STATE OF ILLINOIS**
**DEPARTMENT OF TRANSPORTATION**

**FIBER OPTIC DISTRIBUTION CABLE SPLICE ASSIGNMENTS**
**DCF–NO–003**

SCALE: SHEET OF SHEETS STA. TO STA.

| F.A.P. RTE. | SECTION | COUNTY | TOTAL SHEETS | SHEET NO. |
|---|---|---|---|---|
| 307 | 2020-263-SUR,SW&TS | DUPAGE | 529 | 440 |
| | | CONTRACT NO. 62N33 | | |
| | ILLINOIS | FED. AID PROJECT | | |

| LATERAL CABLE FIBER ASSIGNMENTS | | | | ORIGINATION | CAB-NO-000 |
|---|---|---|---|---|---|
| LATERAL CABLE DESIGNATION | | | LCF-NO-001a | DESTINATION | CMV-NO-000 |
| BUFFER TUBE | FIBER | FIBER NO. | CABINET CONNECTIONS | DISTRIBUTION CABLE CONNECTIONS | |
| BLUE | Blue 1 | 1 | PATCH PANEL "A" PORT 1 (JUMPERED TO LAYER III ETHERNET SWITCH) | DCF-NO-001 (EB), FIBER 1 | |
| | Orange 2 | 2 | PATCH PANEL "A" PORT 2 (JUMPERED TO LAYER III ETHERNET SWITCH) | DCF-NO-001 (EB), FIBER 2 | |
| | Green 3 | 3 | PATCH PANEL "A" PORT 3 | NO CONNECTION (LATERAL STRANDS COILED IN SPLICE CLOSURE) | |
| | Brown 4 | 4 | PATCH PANEL "A" PORT 4 | NO CONNECTION (LATERAL STRANDS COILED IN SPLICE CLOSURE) | |
| | Slate 5 | 5 | PATCH PANEL "A" PORT 5 | NO CONNECTION (LATERAL STRANDS COILED IN SPLICE CLOSURE) | |
| | White 6 | 6 | PATCH PANEL "A" PORT 6 | NO CONNECTION (LATERAL STRANDS COILED IN SPLICE CLOSURE) | |
| | Red 7 | 7 | PATCH PANEL "A" PORT 7 (JUMPERED TO LAYER III ETHERNET SWITCH) | DCF-NO-001 (EB), FIBER 55 | |
| | Black 8 | 8 | PATCH PANEL "A" PORT 8 | NO CONNECTION (LATERAL STRANDS COILED IN SPLICE CLOSURE) | |
| | Yellow 9 | 9 | PATCH PANEL "A" PORT 9 | NO CONNECTION (LATERAL STRANDS COILED IN SPLICE CLOSURE) | |
| | Violet 10 | 10 | PATCH PANEL "A" PORT 10 | NO CONNECTION (LATERAL STRANDS COILED IN SPLICE CLOSURE) | |
| | Rose 11 | 11 | PATCH PANEL "A" PORT 11 | NO CONNECTION (LATERAL STRANDS COILED IN SPLICE CLOSURE) | |
| | Aqua 12 | 12 | PATCH PANEL "A" PORT 12 | NO CONNECTION (LATERAL STRANDS COILED IN SPLICE CLOSURE) | |
| ORANGE | Blue 1 | 13 | COILED IN FIBER OPTIC INTERCONNECT CENTER | NO CONNECTION (LATERAL STRANDS COILED IN SPLICE CLOSURE) | |
| | Orange 2 | 14 | COILED IN FIBER OPTIC INTERCONNECT CENTER | NO CONNECTION (LATERAL STRANDS COILED IN SPLICE CLOSURE) | |
| | Green 3 | 15 | COILED IN FIBER OPTIC INTERCONNECT CENTER | NO CONNECTION (LATERAL STRANDS COILED IN SPLICE CLOSURE) | |
| | Brown 4 | 16 | COILED IN FIBER OPTIC INTERCONNECT CENTER | NO CONNECTION (LATERAL STRANDS COILED IN SPLICE CLOSURE) | |
| | Slate 5 | 17 | COILED IN FIBER OPTIC INTERCONNECT CENTER | NO CONNECTION (LATERAL STRANDS COILED IN SPLICE CLOSURE) | |
| | White 6 | 18 | COILED IN FIBER OPTIC INTERCONNECT CENTER | NO CONNECTION (LATERAL STRANDS COILED IN SPLICE CLOSURE) | |
| | Red 7 | 19 | COILED IN FIBER OPTIC INTERCONNECT CENTER | NO CONNECTION (LATERAL STRANDS COILED IN SPLICE CLOSURE) | |
| | Black 8 | 20 | COILED IN FIBER OPTIC INTERCONNECT CENTER | NO CONNECTION (LATERAL STRANDS COILED IN SPLICE CLOSURE) | |
| | Yellow 9 | 21 | COILED IN FIBER OPTIC INTERCONNECT CENTER | NO CONNECTION (LATERAL STRANDS COILED IN SPLICE CLOSURE) | |
| | Violet 10 | 22 | COILED IN FIBER OPTIC INTERCONNECT CENTER | NO CONNECTION (LATERAL STRANDS COILED IN SPLICE CLOSURE) | |
| | Rose 11 | 23 | COILED IN FIBER OPTIC INTERCONNECT CENTER | NO CONNECTION (LATERAL STRANDS COILED IN SPLICE CLOSURE) | |
| | Aqua 12 | 24 | COILED IN FIBER OPTIC INTERCONNECT CENTER | NO CONNECTION (LATERAL STRANDS COILED IN SPLICE CLOSURE) | |

MODEL: Default
FILE NAME: pw:\\jk-pw.bentley.com:jk-pw-01\Documents\01 Active Projects\HWY-CHS-1689593100 - IL 64\Phase III\2 Design\CADD\Plan Sheets\Communications\West Corridor\108121-sht-comm-lateral-01_KHA.dgn

Kimley»Horn
© 2023 KIMLEY-HORN AND ASSOCIATES, INC.
4001 WARRENVILLE ROAD, SUITE 650
WARRENVILLE, IL 60555
PHONE: 630-487-5550
WWW.KIMLEY-HORN.COM

| | | |
|---|---|---|
| USER NAME = | DESIGNED - | REVISED - |
| | DRAWN - | REVISED - |
| PLOT SCALE = | CHECKED - | REVISED - |
| PLOT DATE = | DATE - | REVISED - |

**STATE OF ILLINOIS**
**DEPARTMENT OF TRANSPORTATION**

**FIBER OPTIC LATERAL CABLE SPLICE ASSIGNMENTS**
**LCF–NO–001a**

SCALE: | SHEET OF SHEETS | STA. TO STA.

| F.A.P. RTE. | SECTION | COUNTY | TOTAL SHEETS | SHEET NO. |
|---|---|---|---|---|
| 307 | 2020-263-SUR,SW&TS | DUPAGE | 529 | 441 |
| | | CONTRACT NO. 62N33 | | |
| | ILLINOIS | FED. AID PROJECT | | |

| LATERAL CABLE FIBER ASSIGNMENTS | | | | ORIGINATION | CAB-NO-000A |
|---|---|---|---|---|---|
| LATERAL CABLE DESIGNATION | | | LCF-NO-001b | DESTINATION | CMV-NO-000C |
| BUFFER TUBE | FIBER | FIBER NO. | CABINET CONNECTIONS | DISTRIBUTION CABLE CONNECTIONS | |
| BLUE | Blue 1 | 1 | PATCH PANEL "A" PORT 1 (JUMPERED TO LAYER II ETHERNET SWITCH) | DCF-NO-001 (WB), FIBER 3 | |
| | Orange 2 | 2 | PATCH PANEL "A" PORT 2 (JUMPERED TO LAYER II ETHERNET SWITCH) | DCF-NO-001 (WB), FIBER 4 | |
| | Green 3 | 3 | PATCH PANEL "A" PORT 3 | NO CONNECTION (LATERAL STRANDS COILED IN SPLICE CLOSURE) | |
| | Brown 4 | 4 | PATCH PANEL "A" PORT 4 | NO CONNECTION (LATERAL STRANDS COILED IN SPLICE CLOSURE) | |
| | Slate 5 | 5 | PATCH PANEL "A" PORT 5 | NO CONNECTION (LATERAL STRANDS COILED IN SPLICE CLOSURE) | |
| | White 6 | 6 | PATCH PANEL "A" PORT 6 | NO CONNECTION (LATERAL STRANDS COILED IN SPLICE CLOSURE) | |
| | Red 7 | 7 | PATCH PANEL "A" PORT 7 (JUMPERED TO LAYER II ETHERNET SWITCH) | DCF-NO-001 (EB), FIBER 3 | |
| | Black 8 | 8 | PATCH PANEL "A" PORT 8 (JUMPERED TO LAYER II ETHERNET SWITCH) | DCF-NO-001 (EB), FIBER 4 | |
| | Yellow 9 | 9 | PATCH PANEL "A" PORT 9 | NO CONNECTION (LATERAL STRANDS COILED IN SPLICE CLOSURE) | |
| | Violet 10 | 10 | PATCH PANEL "A" PORT 10 | NO CONNECTION (LATERAL STRANDS COILED IN SPLICE CLOSURE) | |
| | Rose 11 | 11 | PATCH PANEL "A" PORT 11 | NO CONNECTION (LATERAL STRANDS COILED IN SPLICE CLOSURE) | |
| | Aqua 12 | 12 | PATCH PANEL "A" PORT 12 | NO CONNECTION (LATERAL STRANDS COILED IN SPLICE CLOSURE) | |
| ORANGE | Blue 1 | 13 | COILED IN FIBER OPTIC INTERCONNECT CENTER | NO CONNECTION (LATERAL STRANDS COILED IN SPLICE CLOSURE) | |
| | Orange 2 | 14 | COILED IN FIBER OPTIC INTERCONNECT CENTER | NO CONNECTION (LATERAL STRANDS COILED IN SPLICE CLOSURE) | |
| | Green 3 | 15 | COILED IN FIBER OPTIC INTERCONNECT CENTER | NO CONNECTION (LATERAL STRANDS COILED IN SPLICE CLOSURE) | |
| | Brown 4 | 16 | COILED IN FIBER OPTIC INTERCONNECT CENTER | NO CONNECTION (LATERAL STRANDS COILED IN SPLICE CLOSURE) | |
| | Slate 5 | 17 | COILED IN FIBER OPTIC INTERCONNECT CENTER | NO CONNECTION (LATERAL STRANDS COILED IN SPLICE CLOSURE) | |
| | White 6 | 18 | COILED IN FIBER OPTIC INTERCONNECT CENTER | NO CONNECTION (LATERAL STRANDS COILED IN SPLICE CLOSURE) | |
| | Red 7 | 19 | COILED IN FIBER OPTIC INTERCONNECT CENTER | NO CONNECTION (LATERAL STRANDS COILED IN SPLICE CLOSURE) | |
| | Black 8 | 20 | COILED IN FIBER OPTIC INTERCONNECT CENTER | NO CONNECTION (LATERAL STRANDS COILED IN SPLICE CLOSURE) | |
| | Yellow 9 | 21 | COILED IN FIBER OPTIC INTERCONNECT CENTER | NO CONNECTION (LATERAL STRANDS COILED IN SPLICE CLOSURE) | |
| | Violet 10 | 22 | COILED IN FIBER OPTIC INTERCONNECT CENTER | NO CONNECTION (LATERAL STRANDS COILED IN SPLICE CLOSURE) | |
| | Rose 11 | 23 | COILED IN FIBER OPTIC INTERCONNECT CENTER | NO CONNECTION (LATERAL STRANDS COILED IN SPLICE CLOSURE) | |
| | Aqua 12 | 24 | COILED IN FIBER OPTIC INTERCONNECT CENTER | NO CONNECTION (LATERAL STRANDS COILED IN SPLICE CLOSURE) | |

MODEL: Default
FILE NAME: pw:\\jk-pw.bentley.com:jk-pw-01\Documents\01 Active Projects\HAVC-CHS-1689593100 - IL 64\Phase III\2 Design\CADD\Plan Sheets\Communications\West Corridor\108121-sht-comm-lateral-02_KHA.dgn

Kimley»Horn

© 2023 KIMLEY-HORN AND ASSOCIATES, INC.
4201 WINFIELD ROAD, SUITE 600
WARRENVILLE, IL 60555
PHONE: 630-487-5550
WWW.KIMLEY-HORN.COM

| | | |
|---|---|---|
| USER NAME = | DESIGNED - | REVISED - |
| | DRAWN - | REVISED - |
| PLOT SCALE = | CHECKED - | REVISED - |
| PLOT DATE = | DATE - | REVISED - |

**STATE OF ILLINOIS**
**DEPARTMENT OF TRANSPORTATION**

**FIBER OPTIC LATERAL CABLE SPLICE ASSIGNMENTS**
**LCF–NO–001b**

SCALE: | SHEET OF SHEETS | STA. TO STA.

| F.A.P. RTE. | SECTION | COUNTY | TOTAL SHEETS | SHEET NO. |
|---|---|---|---|---|
| 307 | 2020-263-SUR,SW&TS | DUPAGE | 529 | 442 |
| | | CONTRACT NO. 62N33 | | |
| | ILLINOIS | FED. AID PROJECT | | |

| LATERAL CABLE FIBER ASSIGNMENTS | | | | ORIGINATION | CAB-NO-001 |
|---|---|---|---|---|---|
| LATERAL CABLE DESIGNATION | | | LCF-NO-001c | DESTINATION | CMV-NO-001A |
| BUFFER TUBE | FIBER | FIBER NO. | CABINET CONNECTIONS | DISTRIBUTION CABLE CONNECTIONS | |
| BLUE | Blue 1 | 1 | PATCH PANEL "A" PORT 1 (JUMPERED TO LAYER II ETHERNET SWITCH) | DCF-NO-001 (WB), FIBER 5 | |
| | Orange 2 | 2 | PATCH PANEL "A" PORT 2 (JUMPERED TO LAYER II ETHERNET SWITCH) | DCF-NO-001 (WB), FIBER 6 | |
| | Green 3 | 3 | PATCH PANEL "A" PORT 3 | NO CONNECTION (LATERAL STRANDS COILED IN SPLICE CLOSURE) | |
| | Brown 4 | 4 | PATCH PANEL "A" PORT 4 | NO CONNECTION (LATERAL STRANDS COILED IN SPLICE CLOSURE) | |
| | Slate 5 | 5 | PATCH PANEL "A" PORT 5 | NO CONNECTION (LATERAL STRANDS COILED IN SPLICE CLOSURE) | |
| | White 6 | 6 | PATCH PANEL "A" PORT 6 | NO CONNECTION (LATERAL STRANDS COILED IN SPLICE CLOSURE) | |
| | Red 7 | 7 | PATCH PANEL "A" PORT 7 (JUMPERED TO LAYER II ETHERNET SWITCH) | DCF-NO-001 (EB), FIBER 5 | |
| | Black 8 | 8 | PATCH PANEL "A" PORT 8 (JUMPERED TO LAYER II ETHERNET SWITCH) | DCF-NO-001 (EB), FIBER 6 | |
| | Yellow 9 | 9 | PATCH PANEL "A" PORT 9 | NO CONNECTION (LATERAL STRANDS COILED IN SPLICE CLOSURE) | |
| | Violet 10 | 10 | PATCH PANEL "A" PORT 10 | NO CONNECTION (LATERAL STRANDS COILED IN SPLICE CLOSURE) | |
| | Rose 11 | 11 | PATCH PANEL "A" PORT 11 | NO CONNECTION (LATERAL STRANDS COILED IN SPLICE CLOSURE) | |
| | Aqua 12 | 12 | PATCH PANEL "A" PORT 12 | NO CONNECTION (LATERAL STRANDS COILED IN SPLICE CLOSURE) | |
| ORANGE | Blue 1 | 13 | COILED IN FIBER OPTIC INTERCONNECT CENTER | NO CONNECTION (LATERAL STRANDS COILED IN SPLICE CLOSURE) | |
| | Orange 2 | 14 | COILED IN FIBER OPTIC INTERCONNECT CENTER | NO CONNECTION (LATERAL STRANDS COILED IN SPLICE CLOSURE) | |
| | Green 3 | 15 | COILED IN FIBER OPTIC INTERCONNECT CENTER | NO CONNECTION (LATERAL STRANDS COILED IN SPLICE CLOSURE) | |
| | Brown 4 | 16 | COILED IN FIBER OPTIC INTERCONNECT CENTER | NO CONNECTION (LATERAL STRANDS COILED IN SPLICE CLOSURE) | |
| | Slate 5 | 17 | COILED IN FIBER OPTIC INTERCONNECT CENTER | NO CONNECTION (LATERAL STRANDS COILED IN SPLICE CLOSURE) | |
| | White 6 | 18 | COILED IN FIBER OPTIC INTERCONNECT CENTER | NO CONNECTION (LATERAL STRANDS COILED IN SPLICE CLOSURE) | |
| | Red 7 | 19 | COILED IN FIBER OPTIC INTERCONNECT CENTER | NO CONNECTION (LATERAL STRANDS COILED IN SPLICE CLOSURE) | |
| | Black 8 | 20 | COILED IN FIBER OPTIC INTERCONNECT CENTER | NO CONNECTION (LATERAL STRANDS COILED IN SPLICE CLOSURE) | |
| | Yellow 9 | 21 | COILED IN FIBER OPTIC INTERCONNECT CENTER | NO CONNECTION (LATERAL STRANDS COILED IN SPLICE CLOSURE) | |
| | Violet 10 | 22 | COILED IN FIBER OPTIC INTERCONNECT CENTER | NO CONNECTION (LATERAL STRANDS COILED IN SPLICE CLOSURE) | |
| | Rose 11 | 23 | COILED IN FIBER OPTIC INTERCONNECT CENTER | NO CONNECTION (LATERAL STRANDS COILED IN SPLICE CLOSURE) | |
| | Aqua 12 | 24 | COILED IN FIBER OPTIC INTERCONNECT CENTER | NO CONNECTION (LATERAL STRANDS COILED IN SPLICE CLOSURE) | |

MODEL: Default
FILE NAME: pw:\\jk-pw.bentley.com:jk-pw-01\Documents\01 Active Projects\HAVC-CHS-1689593100 - IL 64\Phase III\2 Design\CADD\Plan Sheets\Communications\West Corridor\108121-sht-comm-lateral-03_KHA.dgn

Kimley»Horn
© 2023 KIMLEY-HORN AND ASSOCIATES, INC.
4201 WINFIELD ROAD, SUITE 600
WARRENVILLE, IL 60555
PHONE: 630-487-5550
WWW.KIMLEY-HORN.COM

| | | |
|---|---|---|
| USER NAME = | DESIGNED - | REVISED - |
| | DRAWN - | REVISED - |
| PLOT SCALE = | CHECKED - | REVISED - |
| PLOT DATE = | DATE - | REVISED - |

**STATE OF ILLINOIS**
**DEPARTMENT OF TRANSPORTATION**

**FIBER OPTIC LATERAL CABLE SPLICE ASSIGNMENTS**
**LCF–NO–001c**

SCALE: | SHEET OF SHEETS | STA. TO STA.

| F.A.P. RTE. | SECTION | COUNTY | TOTAL SHEETS | SHEET NO. |
|---|---|---|---|---|
| 307 | 2020-263-SUR,SW&TS | DUPAGE | 529 | 443 |
| | | CONTRACT NO. 62N33 | | |
| | ILLINOIS | FED. AID PROJECT | | |

| LATERAL CABLE FIBER ASSIGNMENTS | | | | ORIGINATION | CAB-NO-002 |
|---|---|---|---|---|---|
| LATERAL CABLE DESIGNATION | | | LCF-NO-001d | DESTINATION | CMV-NO-002A |
| BUFFER TUBE | FIBER | FIBER NO. | CABINET CONNECTIONS | DISTRIBUTION CABLE CONNECTIONS | |
| BLUE | Blue 1 | 1 | PATCH PANEL "A" PORT 1 (JUMPERED TO LAYER II ETHERNET SWITCH) | DCF-NO-001 (WB), FIBER 7 | |
| | Orange 2 | 2 | PATCH PANEL "A" PORT 2 (JUMPERED TO LAYER II ETHERNET SWITCH) | DCF-NO-001 (WB), FIBER 8 | |
| | Green 3 | 3 | PATCH PANEL "A" PORT 3 | NO CONNECTION (LATERAL STRANDS COILED IN SPLICE CLOSURE) | |
| | Brown 4 | 4 | PATCH PANEL "A" PORT 4 | NO CONNECTION (LATERAL STRANDS COILED IN SPLICE CLOSURE) | |
| | Slate 5 | 5 | PATCH PANEL "A" PORT 5 | NO CONNECTION (LATERAL STRANDS COILED IN SPLICE CLOSURE) | |
| | White 6 | 6 | PATCH PANEL "A" PORT 6 | NO CONNECTION (LATERAL STRANDS COILED IN SPLICE CLOSURE) | |
| | Red 7 | 7 | PATCH PANEL "A" PORT 7 (JUMPERED TO LAYER II ETHERNET SWITCH) | DCF-NO-001 (EB), FIBER 7 | |
| | Black 8 | 8 | PATCH PANEL "A" PORT 8 (JUMPERED TO LAYER II ETHERNET SWITCH) | DCF-NO-001 (EB), FIBER 8 | |
| | Yellow 9 | 9 | PATCH PANEL "A" PORT 9 | NO CONNECTION (LATERAL STRANDS COILED IN SPLICE CLOSURE) | |
| | Violet 10 | 10 | PATCH PANEL "A" PORT 10 | NO CONNECTION (LATERAL STRANDS COILED IN SPLICE CLOSURE) | |
| | Rose 11 | 11 | PATCH PANEL "A" PORT 11 | NO CONNECTION (LATERAL STRANDS COILED IN SPLICE CLOSURE) | |
| | Aqua 12 | 12 | PATCH PANEL "A" PORT 12 | NO CONNECTION (LATERAL STRANDS COILED IN SPLICE CLOSURE) | |
| ORANGE | Blue 1 | 13 | COILED IN FIBER OPTIC INTERCONNECT CENTER | NO CONNECTION (LATERAL STRANDS COILED IN SPLICE CLOSURE) | |
| | Orange 2 | 14 | COILED IN FIBER OPTIC INTERCONNECT CENTER | NO CONNECTION (LATERAL STRANDS COILED IN SPLICE CLOSURE) | |
| | Green 3 | 15 | COILED IN FIBER OPTIC INTERCONNECT CENTER | NO CONNECTION (LATERAL STRANDS COILED IN SPLICE CLOSURE) | |
| | Brown 4 | 16 | COILED IN FIBER OPTIC INTERCONNECT CENTER | NO CONNECTION (LATERAL STRANDS COILED IN SPLICE CLOSURE) | |
| | Slate 5 | 17 | COILED IN FIBER OPTIC INTERCONNECT CENTER | NO CONNECTION (LATERAL STRANDS COILED IN SPLICE CLOSURE) | |
| | White 6 | 18 | COILED IN FIBER OPTIC INTERCONNECT CENTER | NO CONNECTION (LATERAL STRANDS COILED IN SPLICE CLOSURE) | |
| | Red 7 | 19 | COILED IN FIBER OPTIC INTERCONNECT CENTER | NO CONNECTION (LATERAL STRANDS COILED IN SPLICE CLOSURE) | |
| | Black 8 | 20 | COILED IN FIBER OPTIC INTERCONNECT CENTER | NO CONNECTION (LATERAL STRANDS COILED IN SPLICE CLOSURE) | |
| | Yellow 9 | 21 | COILED IN FIBER OPTIC INTERCONNECT CENTER | NO CONNECTION (LATERAL STRANDS COILED IN SPLICE CLOSURE) | |
| | Violet 10 | 22 | COILED IN FIBER OPTIC INTERCONNECT CENTER | NO CONNECTION (LATERAL STRANDS COILED IN SPLICE CLOSURE) | |
| | Rose 11 | 23 | COILED IN FIBER OPTIC INTERCONNECT CENTER | NO CONNECTION (LATERAL STRANDS COILED IN SPLICE CLOSURE) | |
| | Aqua 12 | 24 | COILED IN FIBER OPTIC INTERCONNECT CENTER | NO CONNECTION (LATERAL STRANDS COILED IN SPLICE CLOSURE) | |

MODEL: Default
FILE NAME: pw:\\jk-pw.bentley.com:jk-pw-01\Documents\01 Active Projects\HAVC-CHS-1689593100 - IL 64\Phase III\2 Design\CADD\Plan Sheets\Communications\West Corridor\108121-sht-comm-lateral-04_KHA.dgn

Kimley»Horn
© 2023 KIMLEY-HORN AND ASSOCIATES, INC.
4201 WINFIELD ROAD, SUITE 600
WARRENVILLE, IL 60555
PHONE: 630-487-5550
WWW.KIMLEY-HORN.COM

| | | |
|---|---|---|
| USER NAME = | DESIGNED - | REVISED - |
| | DRAWN - | REVISED - |
| PLOT SCALE = | CHECKED - | REVISED - |
| PLOT DATE = | DATE - | REVISED - |

**STATE OF ILLINOIS**
**DEPARTMENT OF TRANSPORTATION**

**FIBER OPTIC LATERAL CABLE SPLICE ASSIGNMENTS**
**LCF–NO–001d**

SCALE: | SHEET OF SHEETS | STA. TO STA.

| F.A.P. RTE. | SECTION | COUNTY | TOTAL SHEETS | SHEET NO. |
|---|---|---|---|---|
| 307 | 2020-263-SUR,SW&TS | DUPAGE | 529 | 444 |
| | | CONTRACT NO. 62N33 | | |
| | ILLINOIS | FED. AID PROJECT | | |

| LATERAL CABLE FIBER ASSIGNMENTS | | | | ORIGINATION | CAB-NO-004 |
|---|---|---|---|---|---|
| LATERAL CABLE DESIGNATION | | | LCF-NO-002a | DESTINATION | CMV-NO-004A |
| BUFFER TUBE | FIBER | FIBER NO. | CABINET CONNECTIONS | DISTRIBUTION CABLE CONNECTIONS | |
| BLUE | Blue 1 | 1 | PATCH PANEL "A" PORT 1 (JUMPERED TO LAYER II ETHERNET SWITCH) | DCF-NO-002 (WB), FIBER 1 | |
| | Orange 2 | 2 | PATCH PANEL "A" PORT 2 (JUMPERED TO LAYER II ETHERNET SWITCH) | DCF-NO-002 (WB), FIBER 2 | |
| | Green 3 | 3 | PATCH PANEL "A" PORT 3 | NO CONNECTION (LATERAL STRANDS COILED IN SPLICE CLOSURE) | |
| | Brown 4 | 4 | PATCH PANEL "A" PORT 4 | NO CONNECTION (LATERAL STRANDS COILED IN SPLICE CLOSURE) | |
| | Slate 5 | 5 | PATCH PANEL "A" PORT 5 | NO CONNECTION (LATERAL STRANDS COILED IN SPLICE CLOSURE) | |
| | White 6 | 6 | PATCH PANEL "A" PORT 6 | NO CONNECTION (LATERAL STRANDS COILED IN SPLICE CLOSURE) | |
| | Red 7 | 7 | PATCH PANEL "A" PORT 7 (JUMPERED TO LAYER II ETHERNET SWITCH) | DCF-NO-002 (EB), FIBER 1 | |
| | Black 8 | 8 | PATCH PANEL "A" PORT 8 (JUMPERED TO LAYER II ETHERNET SWITCH) | DCF-NO-002 (EB), FIBER 2 | |
| | Yellow 9 | 9 | PATCH PANEL "A" PORT 9 | NO CONNECTION (LATERAL STRANDS COILED IN SPLICE CLOSURE) | |
| | Violet 10 | 10 | PATCH PANEL "A" PORT 10 | NO CONNECTION (LATERAL STRANDS COILED IN SPLICE CLOSURE) | |
| | Rose 11 | 11 | PATCH PANEL "A" PORT 11 | NO CONNECTION (LATERAL STRANDS COILED IN SPLICE CLOSURE) | |
| | Aqua 12 | 12 | PATCH PANEL "A" PORT 12 | NO CONNECTION (LATERAL STRANDS COILED IN SPLICE CLOSURE) | |
| ORANGE | Blue 1 | 13 | COILED IN FIBER OPTIC INTERCONNECT CENTER | NO CONNECTION (LATERAL STRANDS COILED IN SPLICE CLOSURE) | |
| | Orange 2 | 14 | COILED IN FIBER OPTIC INTERCONNECT CENTER | NO CONNECTION (LATERAL STRANDS COILED IN SPLICE CLOSURE) | |
| | Green 3 | 15 | COILED IN FIBER OPTIC INTERCONNECT CENTER | NO CONNECTION (LATERAL STRANDS COILED IN SPLICE CLOSURE) | |
| | Brown 4 | 16 | COILED IN FIBER OPTIC INTERCONNECT CENTER | NO CONNECTION (LATERAL STRANDS COILED IN SPLICE CLOSURE) | |
| | Slate 5 | 17 | COILED IN FIBER OPTIC INTERCONNECT CENTER | NO CONNECTION (LATERAL STRANDS COILED IN SPLICE CLOSURE) | |
| | White 6 | 18 | COILED IN FIBER OPTIC INTERCONNECT CENTER | NO CONNECTION (LATERAL STRANDS COILED IN SPLICE CLOSURE) | |
| | Red 7 | 19 | COILED IN FIBER OPTIC INTERCONNECT CENTER | NO CONNECTION (LATERAL STRANDS COILED IN SPLICE CLOSURE) | |
| | Black 8 | 20 | COILED IN FIBER OPTIC INTERCONNECT CENTER | NO CONNECTION (LATERAL STRANDS COILED IN SPLICE CLOSURE) | |
| | Yellow 9 | 21 | COILED IN FIBER OPTIC INTERCONNECT CENTER | NO CONNECTION (LATERAL STRANDS COILED IN SPLICE CLOSURE) | |
| | Violet 10 | 22 | COILED IN FIBER OPTIC INTERCONNECT CENTER | NO CONNECTION (LATERAL STRANDS COILED IN SPLICE CLOSURE) | |
| | Rose 11 | 23 | COILED IN FIBER OPTIC INTERCONNECT CENTER | NO CONNECTION (LATERAL STRANDS COILED IN SPLICE CLOSURE) | |
| | Aqua 12 | 24 | COILED IN FIBER OPTIC INTERCONNECT CENTER | NO CONNECTION (LATERAL STRANDS COILED IN SPLICE CLOSURE) | |

MODEL: Default
FILE NAME: pw:\\jk-pw.bentley.com:jk-pw-01\Documents\01 Active Projects\HAVC-CHS-1689593100 - IL 64\Phase III\2 Design\CADD\Plan Sheets\Communications\West Corridor\108121-sht-comm-lateral-05_KHA.dgn

Kimley»Horn
© 2023 KIMLEY-HORN AND ASSOCIATES, INC.
4201 WINFIELD ROAD, SUITE 600
WARRENVILLE, IL 60555
PHONE: 630-487-5550
WWW.KIMLEY-HORN.COM

| | | |
|---|---|---|
| USER NAME = | DESIGNED - | REVISED - |
| | DRAWN - | REVISED - |
| PLOT SCALE = | CHECKED - | REVISED - |
| PLOT DATE = | DATE - | REVISED - |

**STATE OF ILLINOIS**
**DEPARTMENT OF TRANSPORTATION**

**FIBER OPTIC LATERAL CABLE SPLICE ASSIGNMENTS**
**LCF–NO–002a**

SCALE: | SHEET OF SHEETS | STA. TO STA.

| F.A.P. RTE. | SECTION | COUNTY | TOTAL SHEETS | SHEET NO. |
|---|---|---|---|---|
| 307 | 2020-263-SUR,SW&TS | DUPAGE | 529 | 445 |
| | | CONTRACT NO. 62N33 | | |
| | ILLINOIS | FED. AID PROJECT | | |

| LATERAL CABLE FIBER ASSIGNMENTS | | | | ORIGINATION | CAB-NO-004A |
|---|---|---|---|---|---|
| LATERAL CABLE DESIGNATION | | | LCF-NO-002b | DESTINATION | CMV-NO-004E |
| BUFFER TUBE | FIBER | FIBER NO. | CABINET CONNECTIONS | DISTRIBUTION CABLE CONNECTIONS | |
| BLUE | Blue 1 | 1 | PATCH PANEL "A" PORT 1 (JUMPERED TO LAYER II ETHERNET SWITCH) | DCF-NO-002 (WB), FIBER 3 | |
| | Orange 2 | 2 | PATCH PANEL "A" PORT 2 (JUMPERED TO LAYER II ETHERNET SWITCH) | DCF-NO-002 (WB), FIBER 4 | |
| | Green 3 | 3 | PATCH PANEL "A" PORT 3 | NO CONNECTION (LATERAL STRANDS COILED IN SPLICE CLOSURE) | |
| | Brown 4 | 4 | PATCH PANEL "A" PORT 4 | NO CONNECTION (LATERAL STRANDS COILED IN SPLICE CLOSURE) | |
| | Slate 5 | 5 | PATCH PANEL "A" PORT 5 | NO CONNECTION (LATERAL STRANDS COILED IN SPLICE CLOSURE) | |
| | White 6 | 6 | PATCH PANEL "A" PORT 6 | NO CONNECTION (LATERAL STRANDS COILED IN SPLICE CLOSURE) | |
| | Red 7 | 7 | PATCH PANEL "A" PORT 7 (JUMPERED TO LAYER II ETHERNET SWITCH) | DCF-NO-002 (EB), FIBER 3 | |
| | Black 8 | 8 | PATCH PANEL "A" PORT 8 (JUMPERED TO LAYER II ETHERNET SWITCH) | DCF-NO-002 (EB), FIBER 4 | |
| | Yellow 9 | 9 | PATCH PANEL "A" PORT 9 | NO CONNECTION (LATERAL STRANDS COILED IN SPLICE CLOSURE) | |
| | Violet 10 | 10 | PATCH PANEL "A" PORT 10 | NO CONNECTION (LATERAL STRANDS COILED IN SPLICE CLOSURE) | |
| | Rose 11 | 11 | PATCH PANEL "A" PORT 11 | NO CONNECTION (LATERAL STRANDS COILED IN SPLICE CLOSURE) | |
| | Aqua 12 | 12 | PATCH PANEL "A" PORT 12 | NO CONNECTION (LATERAL STRANDS COILED IN SPLICE CLOSURE) | |
| ORANGE | Blue 1 | 13 | COILED IN FIBER OPTIC INTERCONNECT CENTER | NO CONNECTION (LATERAL STRANDS COILED IN SPLICE CLOSURE) | |
| | Orange 2 | 14 | COILED IN FIBER OPTIC INTERCONNECT CENTER | NO CONNECTION (LATERAL STRANDS COILED IN SPLICE CLOSURE) | |
| | Green 3 | 15 | COILED IN FIBER OPTIC INTERCONNECT CENTER | NO CONNECTION (LATERAL STRANDS COILED IN SPLICE CLOSURE) | |
| | Brown 4 | 16 | COILED IN FIBER OPTIC INTERCONNECT CENTER | NO CONNECTION (LATERAL STRANDS COILED IN SPLICE CLOSURE) | |
| | Slate 5 | 17 | COILED IN FIBER OPTIC INTERCONNECT CENTER | NO CONNECTION (LATERAL STRANDS COILED IN SPLICE CLOSURE) | |
| | White 6 | 18 | COILED IN FIBER OPTIC INTERCONNECT CENTER | NO CONNECTION (LATERAL STRANDS COILED IN SPLICE CLOSURE) | |
| | Red 7 | 19 | COILED IN FIBER OPTIC INTERCONNECT CENTER | NO CONNECTION (LATERAL STRANDS COILED IN SPLICE CLOSURE) | |
| | Black 8 | 20 | COILED IN FIBER OPTIC INTERCONNECT CENTER | NO CONNECTION (LATERAL STRANDS COILED IN SPLICE CLOSURE) | |
| | Yellow 9 | 21 | COILED IN FIBER OPTIC INTERCONNECT CENTER | NO CONNECTION (LATERAL STRANDS COILED IN SPLICE CLOSURE) | |
| | Violet 10 | 22 | COILED IN FIBER OPTIC INTERCONNECT CENTER | NO CONNECTION (LATERAL STRANDS COILED IN SPLICE CLOSURE) | |
| | Rose 11 | 23 | COILED IN FIBER OPTIC INTERCONNECT CENTER | NO CONNECTION (LATERAL STRANDS COILED IN SPLICE CLOSURE) | |
| | Aqua 12 | 24 | COILED IN FIBER OPTIC INTERCONNECT CENTER | NO CONNECTION (LATERAL STRANDS COILED IN SPLICE CLOSURE) | |

MODEL: Default
FILE NAME: pw:\\jk-pw.bentley.com:jk-pw-01\Documents\01 Active Projects\HAWK-CHS-1689593100 - IL 64\Phase III\2 Design\CADD\Plan Sheets\Communications\West Corridor\108121-sht-comm-lateral-06_KHA.dgn

Kimley»Horn
© 2023 KIMLEY-HORN AND ASSOCIATES, INC.
4201 WINFIELD ROAD, SUITE 600
WARRENVILLE, IL 60555
PHONE: 630-487-5550
WWW.KIMLEY-HORN.COM

| | | |
|---|---|---|
| USER NAME = | DESIGNED - | REVISED - |
| | DRAWN - | REVISED - |
| PLOT SCALE = | CHECKED - | REVISED - |
| PLOT DATE = | DATE - | REVISED - |

**STATE OF ILLINOIS**
**DEPARTMENT OF TRANSPORTATION**

**FIBER OPTIC LATERAL CABLE SPLICE ASSIGNMENTS**
**LCF–NO–002b**

SCALE: | SHEET OF SHEETS | STA. TO STA.

| F.A.P. RTE. | SECTION | COUNTY | TOTAL SHEETS | SHEET NO. |
|---|---|---|---|---|
| 307 | 2020-263-SUR,SW&TS | DUPAGE | 529 | 446 |
| | | CONTRACT NO. 62N33 | | |
| | ILLINOIS | FED. AID PROJECT | | |

| LATERAL CABLE FIBER ASSIGNMENTS | | | | ORIGINATION | CAB-NO-005 |
|---|---|---|---|---|---|
| LATERAL CABLE DESIGNATION | | | LCF-NO-002c | DESTINATION | CMV-NO-005F |
| BUFFER TUBE | FIBER | FIBER NO. | CABINET CONNECTIONS | DISTRIBUTION CABLE CONNECTIONS | |
| BLUE | Blue 1 | 1 | PATCH PANEL "A" PORT 1 (JUMPERED TO LAYER III ETHERNET SWITCH) | DCF-NO-002 (WB), FIBER 5 | |
| | Orange 2 | 2 | PATCH PANEL "A" PORT 2 (JUMPERED TO LAYER III ETHERNET SWITCH) | DCF-NO-002 (WB), FIBER 6 | |
| | Green 3 | 3 | PATCH PANEL "A" PORT 3 | NO CONNECTION (LATERAL STRANDS COILED IN SPLICE CLOSURE) | |
| | Brown 4 | 4 | PATCH PANEL "A" PORT 4 | NO CONNECTION (LATERAL STRANDS COILED IN SPLICE CLOSURE) | |
| | Slate 5 | 5 | PATCH PANEL "A" PORT 5 | NO CONNECTION (LATERAL STRANDS COILED IN SPLICE CLOSURE) | |
| | White 6 | 6 | PATCH PANEL "A" PORT 6 | NO CONNECTION (LATERAL STRANDS COILED IN SPLICE CLOSURE) | |
| | Red 7 | 7 | PATCH PANEL "A" PORT 7 (JUMPERED TO LAYER III ETHERNET SWITCH) | DCF-NO-002 (EB), FIBER 5 | |
| | Black 8 | 8 | PATCH PANEL "A" PORT 8 (JUMPERED TO LAYER II ETHERNET SWITCH) | DCF-NO-002 (EB), FIBER 6 | |
| | Yellow 9 | 9 | PATCH PANEL "A" PORT 9 | NO CONNECTION (LATERAL STRANDS COILED IN SPLICE CLOSURE) | |
| | Violet 10 | 10 | PATCH PANEL "A" PORT 10 | NO CONNECTION (LATERAL STRANDS COILED IN SPLICE CLOSURE) | |
| | Rose 11 | 11 | PATCH PANEL "A" PORT 11 (JUMPERED TO LAYER III ETHERNET SWITCH) | DCF-NO-002 (WB), FIBER 55 | |
| | Aqua 12 | 12 | PATCH PANEL "A" PORT 12 (JUMPERED TO LAYER III ETHERNET SWITCH) | DCF-NO-002 (EB), FIBER 55 | |
| ORANGE | Blue 1 | 13 | COILED IN FIBER OPTIC INTERCONNECT CENTER | NO CONNECTION (LATERAL STRANDS COILED IN SPLICE CLOSURE) | |
| | Orange 2 | 14 | COILED IN FIBER OPTIC INTERCONNECT CENTER | NO CONNECTION (LATERAL STRANDS COILED IN SPLICE CLOSURE) | |
| | Green 3 | 15 | COILED IN FIBER OPTIC INTERCONNECT CENTER | NO CONNECTION (LATERAL STRANDS COILED IN SPLICE CLOSURE) | |
| | Brown 4 | 16 | COILED IN FIBER OPTIC INTERCONNECT CENTER | NO CONNECTION (LATERAL STRANDS COILED IN SPLICE CLOSURE) | |
| | Slate 5 | 17 | COILED IN FIBER OPTIC INTERCONNECT CENTER | NO CONNECTION (LATERAL STRANDS COILED IN SPLICE CLOSURE) | |
| | White 6 | 18 | COILED IN FIBER OPTIC INTERCONNECT CENTER | NO CONNECTION (LATERAL STRANDS COILED IN SPLICE CLOSURE) | |
| | Red 7 | 19 | COILED IN FIBER OPTIC INTERCONNECT CENTER | NO CONNECTION (LATERAL STRANDS COILED IN SPLICE CLOSURE) | |
| | Black 8 | 20 | COILED IN FIBER OPTIC INTERCONNECT CENTER | NO CONNECTION (LATERAL STRANDS COILED IN SPLICE CLOSURE) | |
| | Yellow 9 | 21 | COILED IN FIBER OPTIC INTERCONNECT CENTER | NO CONNECTION (LATERAL STRANDS COILED IN SPLICE CLOSURE) | |
| | Violet 10 | 22 | COILED IN FIBER OPTIC INTERCONNECT CENTER | NO CONNECTION (LATERAL STRANDS COILED IN SPLICE CLOSURE) | |
| | Rose 11 | 23 | COILED IN FIBER OPTIC INTERCONNECT CENTER | NO CONNECTION (LATERAL STRANDS COILED IN SPLICE CLOSURE) | |
| | Aqua 12 | 24 | COILED IN FIBER OPTIC INTERCONNECT CENTER | NO CONNECTION (LATERAL STRANDS COILED IN SPLICE CLOSURE) | |

MODEL: Default
FILE NAME: pw:\\jk-pw.bentley.com:jk-pw-01\Documents\01 Active Projects\HAVC-CHS-1689959100 - IL 64\Phase III\2 Design\CADD\Plan Sheets\Communications\West Corridor\108121-sht-comm-lateral-07_KHA.dgn

Kimley»Horn
© 2023 KIMLEY-HORN AND ASSOCIATES, INC.
4201 WINFIELD ROAD, SUITE 600
WARRENVILLE, IL 60555
PHONE: 630-487-5550
WWW.KIMLEY-HORN.COM

| | | |
|---|---|---|
| USER NAME = | DESIGNED - | REVISED - |
| | DRAWN - | REVISED - |
| PLOT SCALE = | CHECKED - | REVISED - |
| PLOT DATE = | DATE - | REVISED - |

**STATE OF ILLINOIS**
**DEPARTMENT OF TRANSPORTATION**

**FIBER OPTIC LATERAL CABLE SPLICE ASSIGNMENTS**
**LCF–NO–002c**

SCALE: | SHEET OF SHEETS | STA. TO STA.

| F.A.P. RTE. | SECTION | COUNTY | TOTAL SHEETS | SHEET NO. |
|---|---|---|---|---|
| 307 | 2020-263-SUR,SW&TS | DUPAGE | 529 | 447 |
| | | CONTRACT NO. 62N33 | | |
| | ILLINOIS | FED. AID PROJECT | | |

| LATERAL CABLE FIBER ASSIGNMENTS | | | | ORIGINATION | CAB-NO-006 |
|---|---|---|---|---|---|
| LATERAL CABLE DESIGNATION | | | LCF-NO-002d | DESTINATION | CMV-NO-006B |
| BUFFER TUBE | FIBER | FIBER NO. | CABINET CONNECTIONS | DISTRIBUTION CABLE CONNECTIONS | |
| BLUE | Blue 1 | 1 | PATCH PANEL "A" PORT 1 (JUMPERED TO LAYER II ETHERNET SWITCH) | DCF-NO-002 (WB), FIBER 7 | |
| | Orange 2 | 2 | PATCH PANEL "A" PORT 2 (JUMPERED TO LAYER II ETHERNET SWITCH) | DCF-NO-002 (WB), FIBER 8 | |
| | Green 3 | 3 | PATCH PANEL "A" PORT 3 | NO CONNECTION (LATERAL STRANDS COILED IN SPLICE CLOSURE) | |
| | Brown 4 | 4 | PATCH PANEL "A" PORT 4 | NO CONNECTION (LATERAL STRANDS COILED IN SPLICE CLOSURE) | |
| | Slate 5 | 5 | PATCH PANEL "A" PORT 5 | NO CONNECTION (LATERAL STRANDS COILED IN SPLICE CLOSURE) | |
| | White 6 | 6 | PATCH PANEL "A" PORT 6 | NO CONNECTION (LATERAL STRANDS COILED IN SPLICE CLOSURE) | |
| | Red 7 | 7 | PATCH PANEL "A" PORT 7 (JUMPERED TO LAYER II ETHERNET SWITCH) | DCF-NO-002 (EB), FIBER 7 | |
| | Black 8 | 8 | PATCH PANEL "A" PORT 8 (JUMPERED TO LAYER II ETHERNET SWITCH) | DCF-NO-002 (EB), FIBER 8 | |
| | Yellow 9 | 9 | PATCH PANEL "A" PORT 9 | NO CONNECTION (LATERAL STRANDS COILED IN SPLICE CLOSURE) | |
| | Violet 10 | 10 | PATCH PANEL "A" PORT 10 | NO CONNECTION (LATERAL STRANDS COILED IN SPLICE CLOSURE) | |
| | Rose 11 | 11 | PATCH PANEL "A" PORT 11 | NO CONNECTION (LATERAL STRANDS COILED IN SPLICE CLOSURE) | |
| | Aqua 12 | 12 | PATCH PANEL "A" PORT 12 | NO CONNECTION (LATERAL STRANDS COILED IN SPLICE CLOSURE) | |
| ORANGE | Blue 1 | 13 | COILED IN FIBER OPTIC INTERCONNECT CENTER | NO CONNECTION (LATERAL STRANDS COILED IN SPLICE CLOSURE) | |
| | Orange 2 | 14 | COILED IN FIBER OPTIC INTERCONNECT CENTER | NO CONNECTION (LATERAL STRANDS COILED IN SPLICE CLOSURE) | |
| | Green 3 | 15 | COILED IN FIBER OPTIC INTERCONNECT CENTER | NO CONNECTION (LATERAL STRANDS COILED IN SPLICE CLOSURE) | |
| | Brown 4 | 16 | COILED IN FIBER OPTIC INTERCONNECT CENTER | NO CONNECTION (LATERAL STRANDS COILED IN SPLICE CLOSURE) | |
| | Slate 5 | 17 | COILED IN FIBER OPTIC INTERCONNECT CENTER | NO CONNECTION (LATERAL STRANDS COILED IN SPLICE CLOSURE) | |
| | White 6 | 18 | COILED IN FIBER OPTIC INTERCONNECT CENTER | NO CONNECTION (LATERAL STRANDS COILED IN SPLICE CLOSURE) | |
| | Red 7 | 19 | COILED IN FIBER OPTIC INTERCONNECT CENTER | NO CONNECTION (LATERAL STRANDS COILED IN SPLICE CLOSURE) | |
| | Black 8 | 20 | COILED IN FIBER OPTIC INTERCONNECT CENTER | NO CONNECTION (LATERAL STRANDS COILED IN SPLICE CLOSURE) | |
| | Yellow 9 | 21 | COILED IN FIBER OPTIC INTERCONNECT CENTER | NO CONNECTION (LATERAL STRANDS COILED IN SPLICE CLOSURE) | |
| | Violet 10 | 22 | COILED IN FIBER OPTIC INTERCONNECT CENTER | NO CONNECTION (LATERAL STRANDS COILED IN SPLICE CLOSURE) | |
| | Rose 11 | 23 | COILED IN FIBER OPTIC INTERCONNECT CENTER | NO CONNECTION (LATERAL STRANDS COILED IN SPLICE CLOSURE) | |
| | Aqua 12 | 24 | COILED IN FIBER OPTIC INTERCONNECT CENTER | NO CONNECTION (LATERAL STRANDS COILED IN SPLICE CLOSURE) | |

MODEL: Default
FILE NAME: pw:\\jk-pw.bentley.com:jk-pw-01\Documents\01 Active Projects\HAWK-CHS-1689593100 - IL 64\Phase III\2 Design\CADD\Plan Sheets\Communications\West Corridor\108121-sht-comm-lateral-08_KHA.dgn

Kimley»Horn
© 2023 KIMLEY-HORN AND ASSOCIATES, INC.
4201 WINFIELD ROAD, SUITE 600
WARRENVILLE, IL 60555
PHONE: 630-487-5550
WWW.KIMLEY-HORN.COM

| | | |
|---|---|---|
| USER NAME = | DESIGNED - | REVISED - |
| | DRAWN - | REVISED - |
| PLOT SCALE = | CHECKED - | REVISED - |
| PLOT DATE = | DATE - | REVISED - |

**STATE OF ILLINOIS**
**DEPARTMENT OF TRANSPORTATION**

**FIBER OPTIC LATERAL CABLE SPLICE ASSIGNMENTS**
**LCF–NO–02d**

SCALE: | SHEET OF SHEETS | STA. TO STA.

| F.A.P. RTE. | SECTION | COUNTY | TOTAL SHEETS | SHEET NO. |
|---|---|---|---|---|
| 307 | 2020-263-SUR,SW&TS | DUPAGE | 529 | 448 |
| | | CONTRACT NO. 62N33 | | |
| | ILLINOIS | FED. AID PROJECT | | |

| LATERAL CABLE FIBER ASSIGNMENTS | | | | ORIGINATION | CAB-NO-006A |
|---|---|---|---|---|---|
| LATERAL CABLE DESIGNATION | | | LCF-NO-002e | DESTINATION | CMV-NO-006E |
| BUFFER TUBE | FIBER | FIBER NO. | CABINET CONNECTIONS | DISTRIBUTION CABLE CONNECTIONS | |
| BLUE | Blue 1 | 1 | PATCH PANEL "A" PORT 1 (JUMPERED TO LAYER II ETHERNET SWITCH) | DCF-NO-002 (WB), FIBER 9 | |
| | Orange 2 | 2 | PATCH PANEL "A" PORT 2 (JUMPERED TO LAYER II ETHERNET SWITCH) | DCF-NO-002 (WB), FIBER 10 | |
| | Green 3 | 3 | PATCH PANEL "A" PORT 3 | NO CONNECTION (LATERAL STRANDS COILED IN SPLICE CLOSURE) | |
| | Brown 4 | 4 | PATCH PANEL "A" PORT 4 | NO CONNECTION (LATERAL STRANDS COILED IN SPLICE CLOSURE) | |
| | Slate 5 | 5 | PATCH PANEL "A" PORT 5 | NO CONNECTION (LATERAL STRANDS COILED IN SPLICE CLOSURE) | |
| | White 6 | 6 | PATCH PANEL "A" PORT 6 | NO CONNECTION (LATERAL STRANDS COILED IN SPLICE CLOSURE) | |
| | Red 7 | 7 | PATCH PANEL "A" PORT 7 (JUMPERED TO LAYER II ETHERNET SWITCH) | DCF-NO-002 (EB), FIBER 9 | |
| | Black 8 | 8 | PATCH PANEL "A" PORT 8 (JUMPERED TO LAYER II ETHERNET SWITCH) | DCF-NO-002 (EB), FIBER 10 | |
| | Yellow 9 | 9 | PATCH PANEL "A" PORT 9 | NO CONNECTION (LATERAL STRANDS COILED IN SPLICE CLOSURE) | |
| | Violet 10 | 10 | PATCH PANEL "A" PORT 10 | NO CONNECTION (LATERAL STRANDS COILED IN SPLICE CLOSURE) | |
| | Rose 11 | 11 | PATCH PANEL "A" PORT 11 | NO CONNECTION (LATERAL STRANDS COILED IN SPLICE CLOSURE) | |
| | Aqua 12 | 12 | PATCH PANEL "A" PORT 12 | NO CONNECTION (LATERAL STRANDS COILED IN SPLICE CLOSURE) | |
| ORANGE | Blue 1 | 13 | COILED IN FIBER OPTIC INTERCONNECT CENTER | NO CONNECTION (LATERAL STRANDS COILED IN SPLICE CLOSURE) | |
| | Orange 2 | 14 | COILED IN FIBER OPTIC INTERCONNECT CENTER | NO CONNECTION (LATERAL STRANDS COILED IN SPLICE CLOSURE) | |
| | Green 3 | 15 | COILED IN FIBER OPTIC INTERCONNECT CENTER | NO CONNECTION (LATERAL STRANDS COILED IN SPLICE CLOSURE) | |
| | Brown 4 | 16 | COILED IN FIBER OPTIC INTERCONNECT CENTER | NO CONNECTION (LATERAL STRANDS COILED IN SPLICE CLOSURE) | |
| | Slate 5 | 17 | COILED IN FIBER OPTIC INTERCONNECT CENTER | NO CONNECTION (LATERAL STRANDS COILED IN SPLICE CLOSURE) | |
| | White 6 | 18 | COILED IN FIBER OPTIC INTERCONNECT CENTER | NO CONNECTION (LATERAL STRANDS COILED IN SPLICE CLOSURE) | |
| | Red 7 | 19 | COILED IN FIBER OPTIC INTERCONNECT CENTER | NO CONNECTION (LATERAL STRANDS COILED IN SPLICE CLOSURE) | |
| | Black 8 | 20 | COILED IN FIBER OPTIC INTERCONNECT CENTER | NO CONNECTION (LATERAL STRANDS COILED IN SPLICE CLOSURE) | |
| | Yellow 9 | 21 | COILED IN FIBER OPTIC INTERCONNECT CENTER | NO CONNECTION (LATERAL STRANDS COILED IN SPLICE CLOSURE) | |
| | Violet 10 | 22 | COILED IN FIBER OPTIC INTERCONNECT CENTER | NO CONNECTION (LATERAL STRANDS COILED IN SPLICE CLOSURE) | |
| | Rose 11 | 23 | COILED IN FIBER OPTIC INTERCONNECT CENTER | NO CONNECTION (LATERAL STRANDS COILED IN SPLICE CLOSURE) | |
| | Aqua 12 | 24 | COILED IN FIBER OPTIC INTERCONNECT CENTER | NO CONNECTION (LATERAL STRANDS COILED IN SPLICE CLOSURE) | |

MODEL: Default
FILE NAME: pw:\\jk-pw.bentley.com:jk-pw-01\Documents\01 Active Projects\HAWK-CHS-1689593100 - IL 64\Phase III\2 Design\CADD\Plan Sheets\Communications\West Corridor\108121-sht-comm-lateral-09_KHA.dgn

Kimley»Horn
© 2023 KIMLEY-HORN AND ASSOCIATES, INC.
4201 WINFIELD ROAD, SUITE 600
WARRENVILLE, IL 60555
PHONE: 630-487-5550
WWW.KIMLEY-HORN.COM

| | | |
|---|---|---|
| USER NAME = | DESIGNED - | REVISED - |
| | DRAWN - | REVISED - |
| PLOT SCALE = | CHECKED - | REVISED - |
| PLOT DATE = | DATE - | REVISED - |

**STATE OF ILLINOIS**
**DEPARTMENT OF TRANSPORTATION**

**FIBER OPTIC LATERAL CABLE SPLICE ASSIGNMENTS**
**LCF–NO–002e**

SCALE: | SHEET OF SHEETS | STA. TO STA.

| F.A.P. RTE. | SECTION | COUNTY | TOTAL SHEETS | SHEET NO. |
|---|---|---|---|---|
| 307 | 2020-263-SUR,SW&TS | DUPAGE | 529 | 449 |
| | | CONTRACT NO. 62N33 | | |
| | ILLINOIS | FED. AID PROJECT | | |

| LATERAL CABLE FIBER ASSIGNMENTS | | | | ORIGINATION | CAB-NO-007 |
|---|---|---|---|---|---|
| LATERAL CABLE DESIGNATION | | | LCF-NO-002f | DESTINATION | CMV-NO-007B |
| BUFFER TUBE | FIBER | FIBER NO. | CABINET CONNECTIONS | DISTRIBUTION CABLE CONNECTIONS | |
| BLUE | Blue 1 | 1 | PATCH PANEL "A" PORT 1 (JUMPERED TO LAYER II ETHERNET SWITCH) | DCF-NO-002 (WB), FIBER 11 | |
| | Orange 2 | 2 | PATCH PANEL "A" PORT 2 (JUMPERED TO LAYER II ETHERNET SWITCH) | DCF-NO-002 (WB), FIBER 12 | |
| | Green 3 | 3 | PATCH PANEL "A" PORT 3 | NO CONNECTION (LATERAL STRANDS COILED IN SPLICE CLOSURE) | |
| | Brown 4 | 4 | PATCH PANEL "A" PORT 4 | NO CONNECTION (LATERAL STRANDS COILED IN SPLICE CLOSURE) | |
| | Slate 5 | 5 | PATCH PANEL "A" PORT 5 | NO CONNECTION (LATERAL STRANDS COILED IN SPLICE CLOSURE) | |
| | White 6 | 6 | PATCH PANEL "A" PORT 6 | NO CONNECTION (LATERAL STRANDS COILED IN SPLICE CLOSURE) | |
| | Red 7 | 7 | PATCH PANEL "A" PORT 7 (JUMPERED TO LAYER II ETHERNET SWITCH) | DCF-NO-002 (EB), FIBER 11 | |
| | Black 8 | 8 | PATCH PANEL "A" PORT 8 (JUMPERED TO LAYER II ETHERNET SWITCH) | DCF-NO-002 (EB), FIBER 12 | |
| | Yellow 9 | 9 | PATCH PANEL "A" PORT 9 | NO CONNECTION (LATERAL STRANDS COILED IN SPLICE CLOSURE) | |
| | Violet 10 | 10 | PATCH PANEL "A" PORT 10 | NO CONNECTION (LATERAL STRANDS COILED IN SPLICE CLOSURE) | |
| | Rose 11 | 11 | PATCH PANEL "A" PORT 11 | NO CONNECTION (LATERAL STRANDS COILED IN SPLICE CLOSURE) | |
| | Aqua 12 | 12 | PATCH PANEL "A" PORT 12 | NO CONNECTION (LATERAL STRANDS COILED IN SPLICE CLOSURE) | |
| ORANGE | Blue 1 | 13 | COILED IN FIBER OPTIC INTERCONNECT CENTER | NO CONNECTION (LATERAL STRANDS COILED IN SPLICE CLOSURE) | |
| | Orange 2 | 14 | COILED IN FIBER OPTIC INTERCONNECT CENTER | NO CONNECTION (LATERAL STRANDS COILED IN SPLICE CLOSURE) | |
| | Green 3 | 15 | COILED IN FIBER OPTIC INTERCONNECT CENTER | NO CONNECTION (LATERAL STRANDS COILED IN SPLICE CLOSURE) | |
| | Brown 4 | 16 | COILED IN FIBER OPTIC INTERCONNECT CENTER | NO CONNECTION (LATERAL STRANDS COILED IN SPLICE CLOSURE) | |
| | Slate 5 | 17 | COILED IN FIBER OPTIC INTERCONNECT CENTER | NO CONNECTION (LATERAL STRANDS COILED IN SPLICE CLOSURE) | |
| | White 6 | 18 | COILED IN FIBER OPTIC INTERCONNECT CENTER | NO CONNECTION (LATERAL STRANDS COILED IN SPLICE CLOSURE) | |
| | Red 7 | 19 | COILED IN FIBER OPTIC INTERCONNECT CENTER | NO CONNECTION (LATERAL STRANDS COILED IN SPLICE CLOSURE) | |
| | Black 8 | 20 | COILED IN FIBER OPTIC INTERCONNECT CENTER | NO CONNECTION (LATERAL STRANDS COILED IN SPLICE CLOSURE) | |
| | Yellow 9 | 21 | COILED IN FIBER OPTIC INTERCONNECT CENTER | NO CONNECTION (LATERAL STRANDS COILED IN SPLICE CLOSURE) | |
| | Violet 10 | 22 | COILED IN FIBER OPTIC INTERCONNECT CENTER | NO CONNECTION (LATERAL STRANDS COILED IN SPLICE CLOSURE) | |
| | Rose 11 | 23 | COILED IN FIBER OPTIC INTERCONNECT CENTER | NO CONNECTION (LATERAL STRANDS COILED IN SPLICE CLOSURE) | |
| | Aqua 12 | 24 | COILED IN FIBER OPTIC INTERCONNECT CENTER | NO CONNECTION (LATERAL STRANDS COILED IN SPLICE CLOSURE) | |

MODEL: Default
FILE NAME: pw:\\jb-pw.bentley.com:jb-pw-01\Documents\01 Active Projects\HWY-CHS-1689959100 - IL 64\Phase III\2 Design\CADD\Plan Sheets\Communications\West Corridor\108121-sht-comm-lateral-10_KHA.dgn

Kimley»Horn
© 2023 KIMLEY-HORN AND ASSOCIATES, INC.
4201 WINFIELD ROAD, SUITE 600
WARRENVILLE, IL 60555
PHONE: 630-487-5550
WWW.KIMLEY-HORN.COM

| | | |
|---|---|---|
| USER NAME = | DESIGNED - | REVISED - |
| | DRAWN - | REVISED - |
| PLOT SCALE = | CHECKED - | REVISED - |
| PLOT DATE = | DATE - | REVISED - |

**STATE OF ILLINOIS**
**DEPARTMENT OF TRANSPORTATION**

**FIBER OPTIC LATERAL CABLE SPLICE ASSIGNMENTS**
**LCF–NO–002f**

SCALE: | SHEET OF SHEETS | STA. TO STA.

| F.A.P. RTE. | SECTION | COUNTY | TOTAL SHEETS | SHEET NO. |
|---|---|---|---|---|
| 307 | 2020-263-SUR,SW&TS | DUPAGE | 529 | 450 |
| | | CONTRACT NO. 62N33 | | |
| | ILLINOIS | FED. AID PROJECT | | |

| LATERAL CABLE FIBER ASSIGNMENTS | | | | ORIGINATION | CAB-NO-008 |
|---|---|---|---|---|---|
| LATERAL CABLE DESIGNATION | | | LCF-NO-002g | DESTINATION | CMV-NO-008C |
| BUFFER TUBE | FIBER | FIBER NO. | CABINET CONNECTIONS | DISTRIBUTION CABLE CONNECTIONS | |
| BLUE | Blue 1 | 1 | PATCH PANEL "A" PORT 1 (JUMPERED TO LAYER II ETHERNET SWITCH) | DCF-NO-002 (WB), FIBER 13 | |
| | Orange 2 | 2 | PATCH PANEL "A" PORT 2 (JUMPERED TO LAYER II ETHERNET SWITCH) | DCF-NO-002 (WB), FIBER 14 | |
| | Green 3 | 3 | PATCH PANEL "A" PORT 3 | NO CONNECTION (LATERAL STRANDS COILED IN SPLICE CLOSURE) | |
| | Brown 4 | 4 | PATCH PANEL "A" PORT 4 | NO CONNECTION (LATERAL STRANDS COILED IN SPLICE CLOSURE) | |
| | Slate 5 | 5 | PATCH PANEL "A" PORT 5 | NO CONNECTION (LATERAL STRANDS COILED IN SPLICE CLOSURE) | |
| | White 6 | 6 | PATCH PANEL "A" PORT 6 | NO CONNECTION (LATERAL STRANDS COILED IN SPLICE CLOSURE) | |
| | Red 7 | 7 | PATCH PANEL "A" PORT 7 (JUMPERED TO LAYER II ETHERNET SWITCH) | DCF-NO-002 (EB), FIBER 13 | |
| | Black 8 | 8 | PATCH PANEL "A" PORT 8 (JUMPERED TO LAYER II ETHERNET SWITCH) | DCF-NO-002 (EB), FIBER 14 | |
| | Yellow 9 | 9 | PATCH PANEL "A" PORT 9 | NO CONNECTION (LATERAL STRANDS COILED IN SPLICE CLOSURE) | |
| | Violet 10 | 10 | PATCH PANEL "A" PORT 10 | NO CONNECTION (LATERAL STRANDS COILED IN SPLICE CLOSURE) | |
| | Rose 11 | 11 | PATCH PANEL "A" PORT 11 | NO CONNECTION (LATERAL STRANDS COILED IN SPLICE CLOSURE) | |
| | Aqua 12 | 12 | PATCH PANEL "A" PORT 12 | NO CONNECTION (LATERAL STRANDS COILED IN SPLICE CLOSURE) | |
| ORANGE | Blue 1 | 13 | COILED IN FIBER OPTIC INTERCONNECT CENTER | NO CONNECTION (LATERAL STRANDS COILED IN SPLICE CLOSURE) | |
| | Orange 2 | 14 | COILED IN FIBER OPTIC INTERCONNECT CENTER | NO CONNECTION (LATERAL STRANDS COILED IN SPLICE CLOSURE) | |
| | Green 3 | 15 | COILED IN FIBER OPTIC INTERCONNECT CENTER | NO CONNECTION (LATERAL STRANDS COILED IN SPLICE CLOSURE) | |
| | Brown 4 | 16 | COILED IN FIBER OPTIC INTERCONNECT CENTER | NO CONNECTION (LATERAL STRANDS COILED IN SPLICE CLOSURE) | |
| | Slate 5 | 17 | COILED IN FIBER OPTIC INTERCONNECT CENTER | NO CONNECTION (LATERAL STRANDS COILED IN SPLICE CLOSURE) | |
| | White 6 | 18 | COILED IN FIBER OPTIC INTERCONNECT CENTER | NO CONNECTION (LATERAL STRANDS COILED IN SPLICE CLOSURE) | |
| | Red 7 | 19 | COILED IN FIBER OPTIC INTERCONNECT CENTER | NO CONNECTION (LATERAL STRANDS COILED IN SPLICE CLOSURE) | |
| | Black 8 | 20 | COILED IN FIBER OPTIC INTERCONNECT CENTER | NO CONNECTION (LATERAL STRANDS COILED IN SPLICE CLOSURE) | |
| | Yellow 9 | 21 | COILED IN FIBER OPTIC INTERCONNECT CENTER | NO CONNECTION (LATERAL STRANDS COILED IN SPLICE CLOSURE) | |
| | Violet 10 | 22 | COILED IN FIBER OPTIC INTERCONNECT CENTER | NO CONNECTION (LATERAL STRANDS COILED IN SPLICE CLOSURE) | |
| | Rose 11 | 23 | COILED IN FIBER OPTIC INTERCONNECT CENTER | NO CONNECTION (LATERAL STRANDS COILED IN SPLICE CLOSURE) | |
| | Aqua 12 | 24 | COILED IN FIBER OPTIC INTERCONNECT CENTER | NO CONNECTION (LATERAL STRANDS COILED IN SPLICE CLOSURE) | |

MODEL: Default
FILE NAME: pw:\\jk-pw.bentley.com:jk-pw-01\Documents\01 Active Projects\HAVC-CHS-1689593100 - IL 64\Phase III\2 Design\CADD\Plan Sheets\Communications\West Corridor\108121-sht-comm-lateral-11_KHA.dgn

Kimley»Horn
© 2023 KIMLEY-HORN AND ASSOCIATES, INC.
4201 WINFIELD ROAD, SUITE 600
WARRENVILLE, IL 60555
PHONE: 630-487-5550
WWW.KIMLEY-HORN.COM

| | | |
|---|---|---|
| USER NAME = | DESIGNED - | REVISED - |
| | DRAWN - | REVISED - |
| PLOT SCALE = | CHECKED - | REVISED - |
| PLOT DATE = | DATE - | REVISED - |

**STATE OF ILLINOIS**
**DEPARTMENT OF TRANSPORTATION**

**FIBER OPTIC LATERAL CABLE SPLICE ASSIGNMENTS**
**LCF–NO–002g**

SCALE: | SHEET OF SHEETS | STA. TO STA.

| F.A.P. RTE. | SECTION | COUNTY | TOTAL SHEETS | SHEET NO. |
|---|---|---|---|---|
| 307 | 2020-263-SUR,SW&TS | DUPAGE | 529 | 451 |
| | | CONTRACT NO. 62N33 | | |
| | ILLINOIS | FED. AID PROJECT | | |

| LATERAL CABLE FIBER ASSIGNMENTS | | | | ORIGINATION | CAB-NO-008A |
|---|---|---|---|---|---|
| LATERAL CABLE DESIGNATION | | | LCF-NO-002h | DESTINATION | CMV-NO-008D |
| BUFFER TUBE | FIBER | FIBER NO. | CABINET CONNECTIONS | DISTRIBUTION CABLE CONNECTIONS | |
| BLUE | Blue 1 | 1 | PATCH PANEL "A" PORT 1 (JUMPERED TO LAYER II ETHERNET SWITCH) | DCF-NO-002 (WB), FIBER 15 | |
| | Orange 2 | 2 | PATCH PANEL "A" PORT 2 (JUMPERED TO LAYER II ETHERNET SWITCH) | DCF-NO-002 (WB), FIBER 16 | |
| | Green 3 | 3 | PATCH PANEL "A" PORT 3 | NO CONNECTION (LATERAL STRANDS COILED IN SPLICE CLOSURE) | |
| | Brown 4 | 4 | PATCH PANEL "A" PORT 4 | NO CONNECTION (LATERAL STRANDS COILED IN SPLICE CLOSURE) | |
| | Slate 5 | 5 | PATCH PANEL "A" PORT 5 | NO CONNECTION (LATERAL STRANDS COILED IN SPLICE CLOSURE) | |
| | White 6 | 6 | PATCH PANEL "A" PORT 6 | NO CONNECTION (LATERAL STRANDS COILED IN SPLICE CLOSURE) | |
| | Red 7 | 7 | PATCH PANEL "A" PORT 7 (JUMPERED TO LAYER II ETHERNET SWITCH) | DCF-NO-002 (EB), FIBER 15 | |
| | Black 8 | 8 | PATCH PANEL "A" PORT 8 (JUMPERED TO LAYER II ETHERNET SWITCH) | DCF-NO-002 (EB), FIBER 16 | |
| | Yellow 9 | 9 | PATCH PANEL "A" PORT 9 | NO CONNECTION (LATERAL STRANDS COILED IN SPLICE CLOSURE) | |
| | Violet 10 | 10 | PATCH PANEL "A" PORT 10 | NO CONNECTION (LATERAL STRANDS COILED IN SPLICE CLOSURE) | |
| | Rose 11 | 11 | PATCH PANEL "A" PORT 11 | NO CONNECTION (LATERAL STRANDS COILED IN SPLICE CLOSURE) | |
| | Aqua 12 | 12 | PATCH PANEL "A" PORT 12 | NO CONNECTION (LATERAL STRANDS COILED IN SPLICE CLOSURE) | |
| ORANGE | Blue 1 | 13 | COILED IN FIBER OPTIC INTERCONNECT CENTER | NO CONNECTION (LATERAL STRANDS COILED IN SPLICE CLOSURE) | |
| | Orange 2 | 14 | COILED IN FIBER OPTIC INTERCONNECT CENTER | NO CONNECTION (LATERAL STRANDS COILED IN SPLICE CLOSURE) | |
| | Green 3 | 15 | COILED IN FIBER OPTIC INTERCONNECT CENTER | NO CONNECTION (LATERAL STRANDS COILED IN SPLICE CLOSURE) | |
| | Brown 4 | 16 | COILED IN FIBER OPTIC INTERCONNECT CENTER | NO CONNECTION (LATERAL STRANDS COILED IN SPLICE CLOSURE) | |
| | Slate 5 | 17 | COILED IN FIBER OPTIC INTERCONNECT CENTER | NO CONNECTION (LATERAL STRANDS COILED IN SPLICE CLOSURE) | |
| | White 6 | 18 | COILED IN FIBER OPTIC INTERCONNECT CENTER | NO CONNECTION (LATERAL STRANDS COILED IN SPLICE CLOSURE) | |
| | Red 7 | 19 | COILED IN FIBER OPTIC INTERCONNECT CENTER | NO CONNECTION (LATERAL STRANDS COILED IN SPLICE CLOSURE) | |
| | Black 8 | 20 | COILED IN FIBER OPTIC INTERCONNECT CENTER | NO CONNECTION (LATERAL STRANDS COILED IN SPLICE CLOSURE) | |
| | Yellow 9 | 21 | COILED IN FIBER OPTIC INTERCONNECT CENTER | NO CONNECTION (LATERAL STRANDS COILED IN SPLICE CLOSURE) | |
| | Violet 10 | 22 | COILED IN FIBER OPTIC INTERCONNECT CENTER | NO CONNECTION (LATERAL STRANDS COILED IN SPLICE CLOSURE) | |
| | Rose 11 | 23 | COILED IN FIBER OPTIC INTERCONNECT CENTER | NO CONNECTION (LATERAL STRANDS COILED IN SPLICE CLOSURE) | |
| | Aqua 12 | 24 | COILED IN FIBER OPTIC INTERCONNECT CENTER | NO CONNECTION (LATERAL STRANDS COILED IN SPLICE CLOSURE) | |

MODEL: Default
FILE NAME: pw:\\jk-pw.bentley.com:jk-pw-01\Documents\01 Active Projects\HAWK-CHS-1689593100 - IL 64\Phase III\2 Design\CADD\Plan Sheets\Communications\West Corridor\108121-sht-comm-lateral-12 KHA.dgn

Kimley»Horn
© 2023 KIMLEY-HORN AND ASSOCIATES, INC.
4201 WINFIELD ROAD, SUITE 600
WARRENVILLE, IL 60555
PHONE: 630-487-5550
WWW.KIMLEY-HORN.COM

| | | |
|---|---|---|
| USER NAME = | DESIGNED - | REVISED - |
| | DRAWN - | REVISED - |
| PLOT SCALE = | CHECKED - | REVISED - |
| PLOT DATE = | DATE - | REVISED - |

**STATE OF ILLINOIS**
**DEPARTMENT OF TRANSPORTATION**

**FIBER OPTIC LATERAL CABLE SPLICE ASSIGNMENTS**
**LCF–NO–002h**

SCALE: | SHEET OF SHEETS | STA. TO STA.

| F.A.P. RTE. | SECTION | COUNTY | TOTAL SHEETS | SHEET NO. |
|---|---|---|---|---|
| 307 | 2020-263-SUR,SW&TS | DUPAGE | 529 | 452 |
| | | CONTRACT NO. 62N33 | | |
| | ILLINOIS | FED. AID PROJECT | | |

| LATERAL CABLE FIBER ASSIGNMENTS | | | | ORIGINATION | CAB-NO-009 |
|---|---|---|---|---|---|
| LATERAL CABLE DESIGNATION | | | LCF-NO-002i | DESTINATION | CMV-NO-009B |
| BUFFER TUBE | FIBER | FIBER NO. | CABINET CONNECTIONS | DISTRIBUTION CABLE CONNECTIONS | |
| BLUE | Blue 1 | 1 | PATCH PANEL "A" PORT 1 (JUMPERED TO LAYER II ETHERNET SWITCH) | DCF-NO-002 (WB), FIBER 17 | |
| | Orange 2 | 2 | PATCH PANEL "A" PORT 2 (JUMPERED TO LAYER II ETHERNET SWITCH) | DCF-NO-002 (WB), FIBER 18 | |
| | Green 3 | 3 | PATCH PANEL "A" PORT 3 | NO CONNECTION (LATERAL STRANDS COILED IN SPLICE CLOSURE) | |
| | Brown 4 | 4 | PATCH PANEL "A" PORT 4 | NO CONNECTION (LATERAL STRANDS COILED IN SPLICE CLOSURE) | |
| | Slate 5 | 5 | PATCH PANEL "A" PORT 5 | NO CONNECTION (LATERAL STRANDS COILED IN SPLICE CLOSURE) | |
| | White 6 | 6 | PATCH PANEL "A" PORT 6 | NO CONNECTION (LATERAL STRANDS COILED IN SPLICE CLOSURE) | |
| | Red 7 | 7 | PATCH PANEL "A" PORT 7 (JUMPERED TO LAYER II ETHERNET SWITCH) | DCF-NO-002 (EB), FIBER 17 | |
| | Black 8 | 8 | PATCH PANEL "A" PORT 8 (JUMPERED TO LAYER II ETHERNET SWITCH) | DCF-NO-002 (EB), FIBER 18 | |
| | Yellow 9 | 9 | PATCH PANEL "A" PORT 9 | NO CONNECTION (LATERAL STRANDS COILED IN SPLICE CLOSURE) | |
| | Violet 10 | 10 | PATCH PANEL "A" PORT 10 | NO CONNECTION (LATERAL STRANDS COILED IN SPLICE CLOSURE) | |
| | Rose 11 | 11 | PATCH PANEL "A" PORT 11 | NO CONNECTION (LATERAL STRANDS COILED IN SPLICE CLOSURE) | |
| | Aqua 12 | 12 | PATCH PANEL "A" PORT 12 | NO CONNECTION (LATERAL STRANDS COILED IN SPLICE CLOSURE) | |
| ORANGE | Blue 1 | 13 | COILED IN FIBER OPTIC INTERCONNECT CENTER | NO CONNECTION (LATERAL STRANDS COILED IN SPLICE CLOSURE) | |
| | Orange 2 | 14 | COILED IN FIBER OPTIC INTERCONNECT CENTER | NO CONNECTION (LATERAL STRANDS COILED IN SPLICE CLOSURE) | |
| | Green 3 | 15 | COILED IN FIBER OPTIC INTERCONNECT CENTER | NO CONNECTION (LATERAL STRANDS COILED IN SPLICE CLOSURE) | |
| | Brown 4 | 16 | COILED IN FIBER OPTIC INTERCONNECT CENTER | NO CONNECTION (LATERAL STRANDS COILED IN SPLICE CLOSURE) | |
| | Slate 5 | 17 | COILED IN FIBER OPTIC INTERCONNECT CENTER | NO CONNECTION (LATERAL STRANDS COILED IN SPLICE CLOSURE) | |
| | White 6 | 18 | COILED IN FIBER OPTIC INTERCONNECT CENTER | NO CONNECTION (LATERAL STRANDS COILED IN SPLICE CLOSURE) | |
| | Red 7 | 19 | COILED IN FIBER OPTIC INTERCONNECT CENTER | NO CONNECTION (LATERAL STRANDS COILED IN SPLICE CLOSURE) | |
| | Black 8 | 20 | COILED IN FIBER OPTIC INTERCONNECT CENTER | NO CONNECTION (LATERAL STRANDS COILED IN SPLICE CLOSURE) | |
| | Yellow 9 | 21 | COILED IN FIBER OPTIC INTERCONNECT CENTER | NO CONNECTION (LATERAL STRANDS COILED IN SPLICE CLOSURE) | |
| | Violet 10 | 22 | COILED IN FIBER OPTIC INTERCONNECT CENTER | NO CONNECTION (LATERAL STRANDS COILED IN SPLICE CLOSURE) | |
| | Rose 11 | 23 | COILED IN FIBER OPTIC INTERCONNECT CENTER | NO CONNECTION (LATERAL STRANDS COILED IN SPLICE CLOSURE) | |
| | Aqua 12 | 24 | COILED IN FIBER OPTIC INTERCONNECT CENTER | NO CONNECTION (LATERAL STRANDS COILED IN SPLICE CLOSURE) | |

MODEL: Default
FILE NAME: pw:\\jk-pw.bentley.com:jk-pw-01\Documents\01 Active Projects\HAVC-CHS-1689959100 - IL 64\Phase III\2 Design\CADD\Plan Sheets\Communications\West Corridor\108121-sht-comm-lateral-13_KHA.dgn

Kimley»Horn
© 2023 KIMLEY-HORN AND ASSOCIATES, INC.
4201 WINFIELD ROAD, SUITE 600
WARRENVILLE, IL 60555
PHONE: 630-487-5550
WWW.KIMLEY-HORN.COM

| | | |
|---|---|---|
| USER NAME = | DESIGNED - | REVISED - |
| | DRAWN - | REVISED - |
| PLOT SCALE = | CHECKED - | REVISED - |
| PLOT DATE = | DATE - | REVISED - |

**STATE OF ILLINOIS**
**DEPARTMENT OF TRANSPORTATION**

**FIBER OPTIC LATERAL CABLE SPLICE ASSIGNMENTS**
**LCF–NO–002i**

SCALE: | SHEET OF SHEETS | STA. TO STA.

| F.A.P. RTE. | SECTION | COUNTY | TOTAL SHEETS | SHEET NO. |
|---|---|---|---|---|
| 307 | 2020-263-SUR,SW&TS | DUPAGE | 529 | 453 |
| | | CONTRACT NO. 62N33 | | |
| | ILLINOIS | FED. AID PROJECT | | |

| LATERAL CABLE FIBER ASSIGNMENTS | | | | ORIGINATION | CAB-NO-010 |
|---|---|---|---|---|---|
| LATERAL CABLE DESIGNATION | | | LCF-NO-002j | DESTINATION | CMV-NO-010 |
| BUFFER TUBE | FIBER | FIBER NO. | CABINET CONNECTIONS | DISTRIBUTION CABLE CONNECTIONS | |
| BLUE | Blue 1 | 1 | PATCH PANEL "A" PORT 1 (JUMPERED TO LAYER II ETHERNET SWITCH) | DCF-NO-002 (WB), FIBER 19 | |
| | Orange 2 | 2 | PATCH PANEL "A" PORT 2 (JUMPERED TO LAYER II ETHERNET SWITCH) | DCF-NO-002 (WB), FIBER 20 | |
| | Green 3 | 3 | PATCH PANEL "A" PORT 3 | NO CONNECTION (LATERAL STRANDS COILED IN SPLICE CLOSURE) | |
| | Brown 4 | 4 | PATCH PANEL "A" PORT 4 | NO CONNECTION (LATERAL STRANDS COILED IN SPLICE CLOSURE) | |
| | Slate 5 | 5 | PATCH PANEL "A" PORT 5 | NO CONNECTION (LATERAL STRANDS COILED IN SPLICE CLOSURE) | |
| | White 6 | 6 | PATCH PANEL "A" PORT 6 | NO CONNECTION (LATERAL STRANDS COILED IN SPLICE CLOSURE) | |
| | Red 7 | 7 | PATCH PANEL "A" PORT 7 (JUMPERED TO LAYER II ETHERNET SWITCH) | DCF-NO-002 (EB), FIBER 19 | |
| | Black 8 | 8 | PATCH PANEL "A" PORT 8 (JUMPERED TO LAYER II ETHERNET SWITCH) | DCF-NO-002 (EB), FIBER 20 | |
| | Yellow 9 | 9 | PATCH PANEL "A" PORT 9 | NO CONNECTION (LATERAL STRANDS COILED IN SPLICE CLOSURE) | |
| | Violet 10 | 10 | PATCH PANEL "A" PORT 10 | NO CONNECTION (LATERAL STRANDS COILED IN SPLICE CLOSURE) | |
| | Rose 11 | 11 | PATCH PANEL "A" PORT 11 | NO CONNECTION (LATERAL STRANDS COILED IN SPLICE CLOSURE) | |
| | Aqua 12 | 12 | PATCH PANEL "A" PORT 12 | NO CONNECTION (LATERAL STRANDS COILED IN SPLICE CLOSURE) | |
| ORANGE | Blue 1 | 13 | COILED IN FIBER OPTIC INTERCONNECT CENTER | NO CONNECTION (LATERAL STRANDS COILED IN SPLICE CLOSURE) | |
| | Orange 2 | 14 | COILED IN FIBER OPTIC INTERCONNECT CENTER | NO CONNECTION (LATERAL STRANDS COILED IN SPLICE CLOSURE) | |
| | Green 3 | 15 | COILED IN FIBER OPTIC INTERCONNECT CENTER | NO CONNECTION (LATERAL STRANDS COILED IN SPLICE CLOSURE) | |
| | Brown 4 | 16 | COILED IN FIBER OPTIC INTERCONNECT CENTER | NO CONNECTION (LATERAL STRANDS COILED IN SPLICE CLOSURE) | |
| | Slate 5 | 17 | COILED IN FIBER OPTIC INTERCONNECT CENTER | NO CONNECTION (LATERAL STRANDS COILED IN SPLICE CLOSURE) | |
| | White 6 | 18 | COILED IN FIBER OPTIC INTERCONNECT CENTER | NO CONNECTION (LATERAL STRANDS COILED IN SPLICE CLOSURE) | |
| | Red 7 | 19 | COILED IN FIBER OPTIC INTERCONNECT CENTER | NO CONNECTION (LATERAL STRANDS COILED IN SPLICE CLOSURE) | |
| | Black 8 | 20 | COILED IN FIBER OPTIC INTERCONNECT CENTER | NO CONNECTION (LATERAL STRANDS COILED IN SPLICE CLOSURE) | |
| | Yellow 9 | 21 | COILED IN FIBER OPTIC INTERCONNECT CENTER | NO CONNECTION (LATERAL STRANDS COILED IN SPLICE CLOSURE) | |
| | Violet 10 | 22 | COILED IN FIBER OPTIC INTERCONNECT CENTER | NO CONNECTION (LATERAL STRANDS COILED IN SPLICE CLOSURE) | |
| | Rose 11 | 23 | COILED IN FIBER OPTIC INTERCONNECT CENTER | NO CONNECTION (LATERAL STRANDS COILED IN SPLICE CLOSURE) | |
| | Aqua 12 | 24 | COILED IN FIBER OPTIC INTERCONNECT CENTER | NO CONNECTION (LATERAL STRANDS COILED IN SPLICE CLOSURE) | |

MODEL: Default
FILE NAME: pw:\\jk-pw.bentley.com:jk-pw-01\Documents\01 Active Projects\HAVC-CHS-1689959100 - IL 64\Phase III\2 Design\CADD\Plan Sheets\Communications\West Corridor\108121-sht-comm-lateral-14_KHA.dgn

Kimley»Horn
© 2023 KIMLEY-HORN AND ASSOCIATES, INC.
4201 WINFIELD ROAD, SUITE 600
WARRENVILLE, IL 60555
PHONE: 630-487-5550
WWW.KIMLEY-HORN.COM

| | | |
|---|---|---|
| USER NAME = | DESIGNED - | REVISED - |
| | DRAWN - | REVISED - |
| PLOT SCALE = | CHECKED - | REVISED - |
| PLOT DATE = | DATE - | REVISED - |

**STATE OF ILLINOIS**
**DEPARTMENT OF TRANSPORTATION**

**FIBER OPTIC LATERAL CABLE SPLICE ASSIGNMENTS**
**LCF–NO–002j**

SCALE: | SHEET OF SHEETS | STA. TO STA.

| F.A.P. RTE. | SECTION | COUNTY | TOTAL SHEETS | SHEET NO. |
|---|---|---|---|---|
| 307 | 2020-263-SUR,SW&TS | DUPAGE | 529 | 454 |
| | | CONTRACT NO. 62N33 | | |
| | ILLINOIS | FED. AID PROJECT | | |

| LATERAL CABLE FIBER ASSIGNMENTS | | | | ORIGINATION | CAB-NO-010A |
|---|---|---|---|---|---|
| LATERAL CABLE DESIGNATION | | | LCF-NO-002k | DESTINATION | CMV-NO-010C |
| BUFFER TUBE | FIBER | FIBER NO. | CABINET CONNECTIONS | DISTRIBUTION CABLE CONNECTIONS | |
| BLUE | Blue 1 | 1 | PATCH PANEL "A" PORT 1 (JUMPERED TO LAYER II ETHERNET SWITCH) | DCF-NO-002 (WB), FIBER 21 | |
| | Orange 2 | 2 | PATCH PANEL "A" PORT 2 (JUMPERED TO LAYER II ETHERNET SWITCH) | DCF-NO-002 (WB), FIBER 22 | |
| | Green 3 | 3 | PATCH PANEL "A" PORT 3 | NO CONNECTION (LATERAL STRANDS COILED IN SPLICE CLOSURE) | |
| | Brown 4 | 4 | PATCH PANEL "A" PORT 4 | NO CONNECTION (LATERAL STRANDS COILED IN SPLICE CLOSURE) | |
| | Slate 5 | 5 | PATCH PANEL "A" PORT 5 | NO CONNECTION (LATERAL STRANDS COILED IN SPLICE CLOSURE) | |
| | White 6 | 6 | PATCH PANEL "A" PORT 6 | NO CONNECTION (LATERAL STRANDS COILED IN SPLICE CLOSURE) | |
| | Red 7 | 7 | PATCH PANEL "A" PORT 7 (JUMPERED TO LAYER II ETHERNET SWITCH) | DCF-NO-002 (EB), FIBER 21 | |
| | Black 8 | 8 | PATCH PANEL "A" PORT 8 (JUMPERED TO LAYER II ETHERNET SWITCH) | DCF-NO-002 (EB), FIBER 22 | |
| | Yellow 9 | 9 | PATCH PANEL "A" PORT 9 | NO CONNECTION (LATERAL STRANDS COILED IN SPLICE CLOSURE) | |
| | Violet 10 | 10 | PATCH PANEL "A" PORT 10 | NO CONNECTION (LATERAL STRANDS COILED IN SPLICE CLOSURE) | |
| | Rose 11 | 11 | PATCH PANEL "A" PORT 11 | NO CONNECTION (LATERAL STRANDS COILED IN SPLICE CLOSURE) | |
| | Aqua 12 | 12 | PATCH PANEL "A" PORT 12 | NO CONNECTION (LATERAL STRANDS COILED IN SPLICE CLOSURE) | |
| ORANGE | Blue 1 | 13 | COILED IN FIBER OPTIC INTERCONNECT CENTER | NO CONNECTION (LATERAL STRANDS COILED IN SPLICE CLOSURE) | |
| | Orange 2 | 14 | COILED IN FIBER OPTIC INTERCONNECT CENTER | NO CONNECTION (LATERAL STRANDS COILED IN SPLICE CLOSURE) | |
| | Green 3 | 15 | COILED IN FIBER OPTIC INTERCONNECT CENTER | NO CONNECTION (LATERAL STRANDS COILED IN SPLICE CLOSURE) | |
| | Brown 4 | 16 | COILED IN FIBER OPTIC INTERCONNECT CENTER | NO CONNECTION (LATERAL STRANDS COILED IN SPLICE CLOSURE) | |
| | Slate 5 | 17 | COILED IN FIBER OPTIC INTERCONNECT CENTER | NO CONNECTION (LATERAL STRANDS COILED IN SPLICE CLOSURE) | |
| | White 6 | 18 | COILED IN FIBER OPTIC INTERCONNECT CENTER | NO CONNECTION (LATERAL STRANDS COILED IN SPLICE CLOSURE) | |
| | Red 7 | 19 | COILED IN FIBER OPTIC INTERCONNECT CENTER | NO CONNECTION (LATERAL STRANDS COILED IN SPLICE CLOSURE) | |
| | Black 8 | 20 | COILED IN FIBER OPTIC INTERCONNECT CENTER | NO CONNECTION (LATERAL STRANDS COILED IN SPLICE CLOSURE) | |
| | Yellow 9 | 21 | COILED IN FIBER OPTIC INTERCONNECT CENTER | NO CONNECTION (LATERAL STRANDS COILED IN SPLICE CLOSURE) | |
| | Violet 10 | 22 | COILED IN FIBER OPTIC INTERCONNECT CENTER | NO CONNECTION (LATERAL STRANDS COILED IN SPLICE CLOSURE) | |
| | Rose 11 | 23 | COILED IN FIBER OPTIC INTERCONNECT CENTER | NO CONNECTION (LATERAL STRANDS COILED IN SPLICE CLOSURE) | |
| | Aqua 12 | 24 | COILED IN FIBER OPTIC INTERCONNECT CENTER | NO CONNECTION (LATERAL STRANDS COILED IN SPLICE CLOSURE) | |

MODEL: Default
FILE NAME: pw:\\jk-pw.bentley.com:jk-pw-01\Documents\01 Active Projects\HWY-CHS-1689593100 - IL 64\Phase III\2 Design\CADD\Plan Sheets\Communications\West Corridor\108121-sht-comm-lateral-15_KHA.dgn

Kimley»Horn
© 2023 KIMLEY-HORN AND ASSOCIATES, INC.
4201 WINFIELD ROAD, SUITE 600
WARRENVILLE, IL 60555
PHONE: 630-487-5550
WWW.KIMLEY-HORN.COM

| | | |
|---|---|---|
| USER NAME = | DESIGNED - | REVISED - |
| | DRAWN - | REVISED - |
| PLOT SCALE = | CHECKED - | REVISED - |
| PLOT DATE = | DATE - | REVISED - |

**STATE OF ILLINOIS**
**DEPARTMENT OF TRANSPORTATION**

**FIBER OPTIC LATERAL CABLE SPLICE ASSIGNMENTS**
**LCF–NO–002k**

SCALE: | SHEET OF SHEETS | STA. TO STA.

| F.A.P. RTE. | SECTION | COUNTY | TOTAL SHEETS | SHEET NO. |
|---|---|---|---|---|
| 307 | 2020-263-SUR,SW&TS | DUPAGE | 529 | 455 |
| | | CONTRACT NO. 62N33 | | |
| | ILLINOIS | FED. AID PROJECT | | |

| LATERAL CABLE FIBER ASSIGNMENTS | | | | ORIGINATION | CAB-NO-011 |
|---|---|---|---|---|---|
| LATERAL CABLE DESIGNATION | | | LCF-NO-002I | DESTINATION | CMV-NO-011B |
| BUFFER TUBE | FIBER | FIBER NO. | CABINET CONNECTIONS | DISTRIBUTION CABLE CONNECTIONS | |
| BLUE | Blue 1 | 1 | PATCH PANEL "A" PORT 1 (JUMPERED TO LAYER II ETHERNET SWITCH) | DCF-NO-002 (WB), FIBER 37 | |
| | Orange 2 | 2 | PATCH PANEL "A" PORT 2 (JUMPERED TO LAYER II ETHERNET SWITCH) | DCF-NO-002 (WB), FIBER 38 | |
| | Green 3 | 3 | PATCH PANEL "A" PORT 3 | NO CONNECTION (LATERAL STRANDS COILED IN SPLICE CLOSURE) | |
| | Brown 4 | 4 | PATCH PANEL "A" PORT 4 | NO CONNECTION (LATERAL STRANDS COILED IN SPLICE CLOSURE) | |
| | Slate 5 | 5 | PATCH PANEL "A" PORT 5 | NO CONNECTION (LATERAL STRANDS COILED IN SPLICE CLOSURE) | |
| | White 6 | 6 | PATCH PANEL "A" PORT 6 | NO CONNECTION (LATERAL STRANDS COILED IN SPLICE CLOSURE) | |
| | Red 7 | 7 | PATCH PANEL "A" PORT 7 (JUMPERED TO LAYER II ETHERNET SWITCH) | DCF-NO-002 (EB), FIBER 37 | |
| | Black 8 | 8 | PATCH PANEL "A" PORT 8 (JUMPERED TO LAYER II ETHERNET SWITCH) | DCF-NO-002 (EB), FIBER 38 | |
| | Yellow 9 | 9 | PATCH PANEL "A" PORT 9 | NO CONNECTION (LATERAL STRANDS COILED IN SPLICE CLOSURE) | |
| | Violet 10 | 10 | PATCH PANEL "A" PORT 10 | NO CONNECTION (LATERAL STRANDS COILED IN SPLICE CLOSURE) | |
| | Rose 11 | 11 | PATCH PANEL "A" PORT 11 | NO CONNECTION (LATERAL STRANDS COILED IN SPLICE CLOSURE) | |
| | Aqua 12 | 12 | PATCH PANEL "A" PORT 12 | NO CONNECTION (LATERAL STRANDS COILED IN SPLICE CLOSURE) | |
| ORANGE | Blue 1 | 13 | COILED IN FIBER OPTIC INTERCONNECT CENTER | NO CONNECTION (LATERAL STRANDS COILED IN SPLICE CLOSURE) | |
| | Orange 2 | 14 | COILED IN FIBER OPTIC INTERCONNECT CENTER | NO CONNECTION (LATERAL STRANDS COILED IN SPLICE CLOSURE) | |
| | Green 3 | 15 | COILED IN FIBER OPTIC INTERCONNECT CENTER | NO CONNECTION (LATERAL STRANDS COILED IN SPLICE CLOSURE) | |
| | Brown 4 | 16 | COILED IN FIBER OPTIC INTERCONNECT CENTER | NO CONNECTION (LATERAL STRANDS COILED IN SPLICE CLOSURE) | |
| | Slate 5 | 17 | COILED IN FIBER OPTIC INTERCONNECT CENTER | NO CONNECTION (LATERAL STRANDS COILED IN SPLICE CLOSURE) | |
| | White 6 | 18 | COILED IN FIBER OPTIC INTERCONNECT CENTER | NO CONNECTION (LATERAL STRANDS COILED IN SPLICE CLOSURE) | |
| | Red 7 | 19 | COILED IN FIBER OPTIC INTERCONNECT CENTER | NO CONNECTION (LATERAL STRANDS COILED IN SPLICE CLOSURE) | |
| | Black 8 | 20 | COILED IN FIBER OPTIC INTERCONNECT CENTER | NO CONNECTION (LATERAL STRANDS COILED IN SPLICE CLOSURE) | |
| | Yellow 9 | 21 | COILED IN FIBER OPTIC INTERCONNECT CENTER | NO CONNECTION (LATERAL STRANDS COILED IN SPLICE CLOSURE) | |
| | Violet 10 | 22 | COILED IN FIBER OPTIC INTERCONNECT CENTER | NO CONNECTION (LATERAL STRANDS COILED IN SPLICE CLOSURE) | |
| | Rose 11 | 23 | COILED IN FIBER OPTIC INTERCONNECT CENTER | NO CONNECTION (LATERAL STRANDS COILED IN SPLICE CLOSURE) | |
| | Aqua 12 | 24 | COILED IN FIBER OPTIC INTERCONNECT CENTER | NO CONNECTION (LATERAL STRANDS COILED IN SPLICE CLOSURE) | |

MODEL: Default
FILE NAME: pw:\\jk-pw.bentley.com:jk-pw-01\Documents\01 Active Projects\HWY-CHS-1689959100 - IL 64\Phase III\2 Design\CADD\Plan Sheets\Communications\West Corridor\108121-sht-comm-lateral-16_KHA.dgn

Kimley»Horn
© 2023 KIMLEY-HORN AND ASSOCIATES, INC.
4201 WINFIELD ROAD, SUITE 600
WARRENVILLE, IL 60555
PHONE: 630-487-5550
WWW.KIMLEY-HORN.COM

| | | |
|---|---|---|
| USER NAME = | DESIGNED - | REVISED - |
| | DRAWN - | REVISED - |
| PLOT SCALE = | CHECKED - | REVISED - |
| PLOT DATE = | DATE - | REVISED - |

**STATE OF ILLINOIS**
**DEPARTMENT OF TRANSPORTATION**

**FIBER OPTIC LATERAL CABLE SPLICE ASSIGNMENTS**
**LCF–NO–002I**

SCALE: | SHEET OF SHEETS | STA. TO STA.

| F.A.P. RTE. | SECTION | COUNTY | TOTAL SHEETS | SHEET NO. |
|---|---|---|---|---|
| 307 | 2020-263-SUR,SW&TS | DUPAGE | 529 | 456 |
| | | CONTRACT NO. 62N33 | | |
| | ILLINOIS | FED. AID PROJECT | | |

| LATERAL CABLE FIBER ASSIGNMENTS | | | | ORIGINATION | CAB-NO-011A |
|---|---|---|---|---|---|
| LATERAL CABLE DESIGNATION | | | LCF-NO-002m | DESTINATION | CMV-NO-011C |
| BUFFER TUBE | FIBER | FIBER NO. | CABINET CONNECTIONS | DISTRIBUTION CABLE CONNECTIONS | |
| BLUE | Blue 1 | 1 | PATCH PANEL "A" PORT 1 (JUMPERED TO LAYER II ETHERNET SWITCH) | DCF-NO-002 (WB), FIBER 23 | |
| | Orange 2 | 2 | PATCH PANEL "A" PORT 2 (JUMPERED TO LAYER II ETHERNET SWITCH) | DCF-NO-002 (WB), FIBER 24 | |
| | Green 3 | 3 | PATCH PANEL "A" PORT 3 | NO CONNECTION (LATERAL STRANDS COILED IN SPLICE CLOSURE) | |
| | Brown 4 | 4 | PATCH PANEL "A" PORT 4 | NO CONNECTION (LATERAL STRANDS COILED IN SPLICE CLOSURE) | |
| | Slate 5 | 5 | PATCH PANEL "A" PORT 5 | NO CONNECTION (LATERAL STRANDS COILED IN SPLICE CLOSURE) | |
| | White 6 | 6 | PATCH PANEL "A" PORT 6 | NO CONNECTION (LATERAL STRANDS COILED IN SPLICE CLOSURE) | |
| | Red 7 | 7 | PATCH PANEL "A" PORT 7 (JUMPERED TO LAYER II ETHERNET SWITCH) | DCF-NO-002 (EB), FIBER 23 | |
| | Black 8 | 8 | PATCH PANEL "A" PORT 8 (JUMPERED TO LAYER II ETHERNET SWITCH) | DCF-NO-002 (EB), FIBER 24 | |
| | Yellow 9 | 9 | PATCH PANEL "A" PORT 9 | NO CONNECTION (LATERAL STRANDS COILED IN SPLICE CLOSURE) | |
| | Violet 10 | 10 | PATCH PANEL "A" PORT 10 | NO CONNECTION (LATERAL STRANDS COILED IN SPLICE CLOSURE) | |
| | Rose 11 | 11 | PATCH PANEL "A" PORT 11 | NO CONNECTION (LATERAL STRANDS COILED IN SPLICE CLOSURE) | |
| | Aqua 12 | 12 | PATCH PANEL "A" PORT 12 | NO CONNECTION (LATERAL STRANDS COILED IN SPLICE CLOSURE) | |
| ORANGE | Blue 1 | 13 | COILED IN FIBER OPTIC INTERCONNECT CENTER | NO CONNECTION (LATERAL STRANDS COILED IN SPLICE CLOSURE) | |
| | Orange 2 | 14 | COILED IN FIBER OPTIC INTERCONNECT CENTER | NO CONNECTION (LATERAL STRANDS COILED IN SPLICE CLOSURE) | |
| | Green 3 | 15 | COILED IN FIBER OPTIC INTERCONNECT CENTER | NO CONNECTION (LATERAL STRANDS COILED IN SPLICE CLOSURE) | |
| | Brown 4 | 16 | COILED IN FIBER OPTIC INTERCONNECT CENTER | NO CONNECTION (LATERAL STRANDS COILED IN SPLICE CLOSURE) | |
| | Slate 5 | 17 | COILED IN FIBER OPTIC INTERCONNECT CENTER | NO CONNECTION (LATERAL STRANDS COILED IN SPLICE CLOSURE) | |
| | White 6 | 18 | COILED IN FIBER OPTIC INTERCONNECT CENTER | NO CONNECTION (LATERAL STRANDS COILED IN SPLICE CLOSURE) | |
| | Red 7 | 19 | COILED IN FIBER OPTIC INTERCONNECT CENTER | NO CONNECTION (LATERAL STRANDS COILED IN SPLICE CLOSURE) | |
| | Black 8 | 20 | COILED IN FIBER OPTIC INTERCONNECT CENTER | NO CONNECTION (LATERAL STRANDS COILED IN SPLICE CLOSURE) | |
| | Yellow 9 | 21 | COILED IN FIBER OPTIC INTERCONNECT CENTER | NO CONNECTION (LATERAL STRANDS COILED IN SPLICE CLOSURE) | |
| | Violet 10 | 22 | COILED IN FIBER OPTIC INTERCONNECT CENTER | NO CONNECTION (LATERAL STRANDS COILED IN SPLICE CLOSURE) | |
| | Rose 11 | 23 | COILED IN FIBER OPTIC INTERCONNECT CENTER | NO CONNECTION (LATERAL STRANDS COILED IN SPLICE CLOSURE) | |
| | Aqua 12 | 24 | COILED IN FIBER OPTIC INTERCONNECT CENTER | NO CONNECTION (LATERAL STRANDS COILED IN SPLICE CLOSURE) | |

MODEL: Default
FILE NAME: pw:\\jk-pw.bentley.com:jk-pw-01\Documents\01 Active Projects\HWY-CHS-1689593100 - IL 64\Phase III\2 Design\CADD\Plan Sheets\Communications\West Corridor\108121-sht-comm-lateral-17-KHA.dgn

Kimley»Horn
© 2023 KIMLEY-HORN AND ASSOCIATES, INC.
4201 WINFIELD ROAD, SUITE 600
WARRENVILLE, IL 60555
PHONE: 630-487-5550
WWW.KIMLEY-HORN.COM

| | | |
|---|---|---|
| USER NAME = | DESIGNED - | REVISED - |
| | DRAWN - | REVISED - |
| PLOT SCALE = | CHECKED - | REVISED - |
| PLOT DATE = | DATE - | REVISED - |

**STATE OF ILLINOIS**
**DEPARTMENT OF TRANSPORTATION**

**FIBER OPTIC LATERAL CABLE SPLICE ASSIGNMENTS**
**LCF–NO–002m**

SCALE: | SHEET OF SHEETS | STA. TO STA.

| F.A.P. RTE. | SECTION | COUNTY | TOTAL SHEETS | SHEET NO. |
|---|---|---|---|---|
| 307 | 2020-263-SUR,SW&TS | DUPAGE | 529 | 457 |
| | | CONTRACT NO. 62N33 | | |
| | ILLINOIS | FED. AID PROJECT | | |

| LATERAL CABLE FIBER ASSIGNMENTS | | | | ORIGINATION | CAB-NO-011B |
|---|---|---|---|---|---|
| LATERAL CABLE DESIGNATION | | | LCF-NO-002n | DESTINATION | CMV-NO-011F |
| BUFFER TUBE | FIBER | FIBER NO. | CABINET CONNECTIONS | DISTRIBUTION CABLE CONNECTIONS | |
| BLUE | Blue 1 | 1 | PATCH PANEL "A" PORT 1 (JUMPERED TO LAYER II ETHERNET SWITCH) | DCF-NO-002 (WB), FIBER 25 | |
| | Orange 2 | 2 | PATCH PANEL "A" PORT 2 (JUMPERED TO LAYER II ETHERNET SWITCH) | DCF-NO-002 (WB), FIBER 26 | |
| | Green 3 | 3 | PATCH PANEL "A" PORT 3 | NO CONNECTION (LATERAL STRANDS COILED IN SPLICE CLOSURE) | |
| | Brown 4 | 4 | PATCH PANEL "A" PORT 4 | NO CONNECTION (LATERAL STRANDS COILED IN SPLICE CLOSURE) | |
| | Slate 5 | 5 | PATCH PANEL "A" PORT 5 | NO CONNECTION (LATERAL STRANDS COILED IN SPLICE CLOSURE) | |
| | White 6 | 6 | PATCH PANEL "A" PORT 6 | NO CONNECTION (LATERAL STRANDS COILED IN SPLICE CLOSURE) | |
| | Red 7 | 7 | PATCH PANEL "A" PORT 7 (JUMPERED TO LAYER II ETHERNET SWITCH) | DCF-NO-002 (EB), FIBER 25 | |
| | Black 8 | 8 | PATCH PANEL "A" PORT 8 (JUMPERED TO LAYER II ETHERNET SWITCH) | DCF-NO-002 (EB), FIBER 26 | |
| | Yellow 9 | 9 | PATCH PANEL "A" PORT 9 | NO CONNECTION (LATERAL STRANDS COILED IN SPLICE CLOSURE) | |
| | Violet 10 | 10 | PATCH PANEL "A" PORT 10 | NO CONNECTION (LATERAL STRANDS COILED IN SPLICE CLOSURE) | |
| | Rose 11 | 11 | PATCH PANEL "A" PORT 11 | NO CONNECTION (LATERAL STRANDS COILED IN SPLICE CLOSURE) | |
| | Aqua 12 | 12 | PATCH PANEL "A" PORT 12 | NO CONNECTION (LATERAL STRANDS COILED IN SPLICE CLOSURE) | |
| ORANGE | Blue 1 | 13 | COILED IN FIBER OPTIC INTERCONNECT CENTER | NO CONNECTION (LATERAL STRANDS COILED IN SPLICE CLOSURE) | |
| | Orange 2 | 14 | COILED IN FIBER OPTIC INTERCONNECT CENTER | NO CONNECTION (LATERAL STRANDS COILED IN SPLICE CLOSURE) | |
| | Green 3 | 15 | COILED IN FIBER OPTIC INTERCONNECT CENTER | NO CONNECTION (LATERAL STRANDS COILED IN SPLICE CLOSURE) | |
| | Brown 4 | 16 | COILED IN FIBER OPTIC INTERCONNECT CENTER | NO CONNECTION (LATERAL STRANDS COILED IN SPLICE CLOSURE) | |
| | Slate 5 | 17 | COILED IN FIBER OPTIC INTERCONNECT CENTER | NO CONNECTION (LATERAL STRANDS COILED IN SPLICE CLOSURE) | |
| | White 6 | 18 | COILED IN FIBER OPTIC INTERCONNECT CENTER | NO CONNECTION (LATERAL STRANDS COILED IN SPLICE CLOSURE) | |
| | Red 7 | 19 | COILED IN FIBER OPTIC INTERCONNECT CENTER | NO CONNECTION (LATERAL STRANDS COILED IN SPLICE CLOSURE) | |
| | Black 8 | 20 | COILED IN FIBER OPTIC INTERCONNECT CENTER | NO CONNECTION (LATERAL STRANDS COILED IN SPLICE CLOSURE) | |
| | Yellow 9 | 21 | COILED IN FIBER OPTIC INTERCONNECT CENTER | NO CONNECTION (LATERAL STRANDS COILED IN SPLICE CLOSURE) | |
| | Violet 10 | 22 | COILED IN FIBER OPTIC INTERCONNECT CENTER | NO CONNECTION (LATERAL STRANDS COILED IN SPLICE CLOSURE) | |
| | Rose 11 | 23 | COILED IN FIBER OPTIC INTERCONNECT CENTER | NO CONNECTION (LATERAL STRANDS COILED IN SPLICE CLOSURE) | |
| | Aqua 12 | 24 | COILED IN FIBER OPTIC INTERCONNECT CENTER | NO CONNECTION (LATERAL STRANDS COILED IN SPLICE CLOSURE) | |

MODEL: Default
FILE NAME: pw:\\jk-pw.bentley.com:jk-pw-01\Documents\01 Active Projects\HAVC-CHS-1689593100 - IL 64\Phase III\2 Design\CADD\Plan Sheets\Communications\West Corridor\108121-sht-comm-lateral-18_KHA.dgn

Kimley»Horn
© 2023 KIMLEY-HORN AND ASSOCIATES, INC.
4201 WINFIELD ROAD, SUITE 600
WARRENVILLE, IL 60555
PHONE: 630-487-5550
WWW.KIMLEY-HORN.COM

| | | |
|---|---|---|
| USER NAME = | DESIGNED - | REVISED - |
| | DRAWN - | REVISED - |
| PLOT SCALE = | CHECKED - | REVISED - |
| PLOT DATE = | DATE - | REVISED - |

**STATE OF ILLINOIS**
**DEPARTMENT OF TRANSPORTATION**

**FIBER OPTIC LATERAL CABLE SPLICE ASSIGNMENTS**
**LCF–NO–002n**

SCALE: | SHEET OF SHEETS | STA. TO STA.

| F.A.P. RTE. | SECTION | COUNTY | TOTAL SHEETS | SHEET NO. |
|---|---|---|---|---|
| 307 | 2020-263-SUR,SW&TS | DUPAGE | 529 | 458 |
| | | CONTRACT NO. 62N33 | | |
| | ILLINOIS | FED. AID PROJECT | | |

| LATERAL CABLE FIBER ASSIGNMENTS | | | | ORIGINATION | CAB-NO-011C |
|---|---|---|---|---|---|
| LATERAL CABLE DESIGNATION | | | LCF-NO-002o | DESTINATION | CMV-NO-011G |
| BUFFER TUBE | FIBER | FIBER NO. | CABINET CONNECTIONS | DISTRIBUTION CABLE CONNECTIONS | |
| BLUE | Blue 1 | 1 | PATCH PANEL "A" PORT 1 (JUMPERED TO LAYER II ETHERNET SWITCH) | DCF-NO-002 (WB), FIBER 27 | |
| | Orange 2 | 2 | PATCH PANEL "A" PORT 2 (JUMPERED TO LAYER II ETHERNET SWITCH) | DCF-NO-002 (WB), FIBER 28 | |
| | Green 3 | 3 | PATCH PANEL "A" PORT 3 | NO CONNECTION (LATERAL STRANDS COILED IN SPLICE CLOSURE) | |
| | Brown 4 | 4 | PATCH PANEL "A" PORT 4 | NO CONNECTION (LATERAL STRANDS COILED IN SPLICE CLOSURE) | |
| | Slate 5 | 5 | PATCH PANEL "A" PORT 5 | NO CONNECTION (LATERAL STRANDS COILED IN SPLICE CLOSURE) | |
| | White 6 | 6 | PATCH PANEL "A" PORT 6 | NO CONNECTION (LATERAL STRANDS COILED IN SPLICE CLOSURE) | |
| | Red 7 | 7 | PATCH PANEL "A" PORT 7 (JUMPERED TO LAYER II ETHERNET SWITCH) | DCF-NO-002 (EB), FIBER 27 | |
| | Black 8 | 8 | PATCH PANEL "A" PORT 8 (JUMPERED TO LAYER II ETHERNET SWITCH) | DCF-NO-002 (EB), FIBER 28 | |
| | Yellow 9 | 9 | PATCH PANEL "A" PORT 9 | NO CONNECTION (LATERAL STRANDS COILED IN SPLICE CLOSURE) | |
| | Violet 10 | 10 | PATCH PANEL "A" PORT 10 | NO CONNECTION (LATERAL STRANDS COILED IN SPLICE CLOSURE) | |
| | Rose 11 | 11 | PATCH PANEL "A" PORT 11 | NO CONNECTION (LATERAL STRANDS COILED IN SPLICE CLOSURE) | |
| | Aqua 12 | 12 | PATCH PANEL "A" PORT 12 | NO CONNECTION (LATERAL STRANDS COILED IN SPLICE CLOSURE) | |
| ORANGE | Blue 1 | 13 | COILED IN FIBER OPTIC INTERCONNECT CENTER | NO CONNECTION (LATERAL STRANDS COILED IN SPLICE CLOSURE) | |
| | Orange 2 | 14 | COILED IN FIBER OPTIC INTERCONNECT CENTER | NO CONNECTION (LATERAL STRANDS COILED IN SPLICE CLOSURE) | |
| | Green 3 | 15 | COILED IN FIBER OPTIC INTERCONNECT CENTER | NO CONNECTION (LATERAL STRANDS COILED IN SPLICE CLOSURE) | |
| | Brown 4 | 16 | COILED IN FIBER OPTIC INTERCONNECT CENTER | NO CONNECTION (LATERAL STRANDS COILED IN SPLICE CLOSURE) | |
| | Slate 5 | 17 | COILED IN FIBER OPTIC INTERCONNECT CENTER | NO CONNECTION (LATERAL STRANDS COILED IN SPLICE CLOSURE) | |
| | White 6 | 18 | COILED IN FIBER OPTIC INTERCONNECT CENTER | NO CONNECTION (LATERAL STRANDS COILED IN SPLICE CLOSURE) | |
| | Red 7 | 19 | COILED IN FIBER OPTIC INTERCONNECT CENTER | NO CONNECTION (LATERAL STRANDS COILED IN SPLICE CLOSURE) | |
| | Black 8 | 20 | COILED IN FIBER OPTIC INTERCONNECT CENTER | NO CONNECTION (LATERAL STRANDS COILED IN SPLICE CLOSURE) | |
| | Yellow 9 | 21 | COILED IN FIBER OPTIC INTERCONNECT CENTER | NO CONNECTION (LATERAL STRANDS COILED IN SPLICE CLOSURE) | |
| | Violet 10 | 22 | COILED IN FIBER OPTIC INTERCONNECT CENTER | NO CONNECTION (LATERAL STRANDS COILED IN SPLICE CLOSURE) | |
| | Rose 11 | 23 | COILED IN FIBER OPTIC INTERCONNECT CENTER | NO CONNECTION (LATERAL STRANDS COILED IN SPLICE CLOSURE) | |
| | Aqua 12 | 24 | COILED IN FIBER OPTIC INTERCONNECT CENTER | NO CONNECTION (LATERAL STRANDS COILED IN SPLICE CLOSURE) | |

MODEL: Default
FILE NAME: pw:\\jk-pw.bentley.com:jk-pw-01\Documents\01 Active Projects\HAWK-CHS-1689593100 - IL 64\Phase III\2 Design\CADD\Plan Sheets\Communications\West Corridor\108121-sht-comm-lateral-19_KHA.dgn

Kimley»Horn
© 2023 KIMLEY-HORN AND ASSOCIATES, INC.
4201 WINFIELD ROAD, SUITE 600
WARRENVILLE, IL 60555
PHONE: 630-487-5550
WWW.KIMLEY-HORN.COM

| | | |
|---|---|---|
| USER NAME = | DESIGNED - | REVISED - |
| | DRAWN - | REVISED - |
| PLOT SCALE = | CHECKED - | REVISED - |
| PLOT DATE = | DATE - | REVISED - |

**STATE OF ILLINOIS**
**DEPARTMENT OF TRANSPORTATION**

**FIBER OPTIC LATERAL CABLE SPLICE ASSIGNMENTS**
**LCF–NO–002o**

SCALE: | SHEET OF SHEETS | STA. TO STA.

| F.A.P. RTE. | SECTION | COUNTY | TOTAL SHEETS | SHEET NO. |
|---|---|---|---|---|
| 307 | 2020-263-SUR,SW&TS | DUPAGE | 529 | 459 |
| | | CONTRACT NO. 62N33 | | |
| | ILLINOIS | FED. AID PROJECT | | |

| LATERAL CABLE FIBER ASSIGNMENTS | | | | ORIGINATION | CAB-NO-014 |
|---|---|---|---|---|---|
| LATERAL CABLE DESIGNATION | | | LCF-NO-003g | DESTINATION | CMV-NO-014A |
| BUFFER TUBE | FIBER | FIBER NO. | CABINET CONNECTIONS | DISTRIBUTION CABLE CONNECTIONS | |
| BLUE | Blue 1 | 1 | PATCH PANEL "A" PORT 1 (JUMPERED TO LAYER II ETHERNET SWITCH) | DCF-NO-003 (WB), FIBER 23 | |
| | Orange 2 | 2 | PATCH PANEL "A" PORT 2 (JUMPERED TO LAYER II ETHERNET SWITCH) | DCF-NO-003 (WB), FIBER 24 | |
| | Green 3 | 3 | PATCH PANEL "A" PORT 3 | NO CONNECTION (LATERAL STRANDS COILED IN SPLICE CLOSURE) | |
| | Brown 4 | 4 | PATCH PANEL "A" PORT 4 | NO CONNECTION (LATERAL STRANDS COILED IN SPLICE CLOSURE) | |
| | Slate 5 | 5 | PATCH PANEL "A" PORT 5 | NO CONNECTION (LATERAL STRANDS COILED IN SPLICE CLOSURE) | |
| | White 6 | 6 | PATCH PANEL "A" PORT 6 | NO CONNECTION (LATERAL STRANDS COILED IN SPLICE CLOSURE) | |
| | Red 7 | 7 | PATCH PANEL "A" PORT 7 (JUMPERED TO LAYER II ETHERNET SWITCH) | DCF-NO-003 (EB), FIBER 23 | |
| | Black 8 | 8 | PATCH PANEL "A" PORT 8 (JUMPERED TO LAYER II ETHERNET SWITCH) | DCF-NO-003 (EB), FIBER 24 | |
| | Yellow 9 | 9 | PATCH PANEL "A" PORT 9 | NO CONNECTION (LATERAL STRANDS COILED IN SPLICE CLOSURE) | |
| | Violet 10 | 10 | PATCH PANEL "A" PORT 10 | NO CONNECTION (LATERAL STRANDS COILED IN SPLICE CLOSURE) | |
| | Rose 11 | 11 | PATCH PANEL "A" PORT 11 | NO CONNECTION (LATERAL STRANDS COILED IN SPLICE CLOSURE) | |
| | Aqua 12 | 12 | PATCH PANEL "A" PORT 12 | NO CONNECTION (LATERAL STRANDS COILED IN SPLICE CLOSURE) | |
| ORANGE | Blue 1 | 13 | COILED IN FIBER OPTIC INTERCONNECT CENTER | NO CONNECTION (LATERAL STRANDS COILED IN SPLICE CLOSURE) | |
| | Orange 2 | 14 | COILED IN FIBER OPTIC INTERCONNECT CENTER | NO CONNECTION (LATERAL STRANDS COILED IN SPLICE CLOSURE) | |
| | Green 3 | 15 | COILED IN FIBER OPTIC INTERCONNECT CENTER | NO CONNECTION (LATERAL STRANDS COILED IN SPLICE CLOSURE) | |
| | Brown 4 | 16 | COILED IN FIBER OPTIC INTERCONNECT CENTER | NO CONNECTION (LATERAL STRANDS COILED IN SPLICE CLOSURE) | |
| | Slate 5 | 17 | COILED IN FIBER OPTIC INTERCONNECT CENTER | NO CONNECTION (LATERAL STRANDS COILED IN SPLICE CLOSURE) | |
| | White 6 | 18 | COILED IN FIBER OPTIC INTERCONNECT CENTER | NO CONNECTION (LATERAL STRANDS COILED IN SPLICE CLOSURE) | |
| | Red 7 | 19 | COILED IN FIBER OPTIC INTERCONNECT CENTER | NO CONNECTION (LATERAL STRANDS COILED IN SPLICE CLOSURE) | |
| | Black 8 | 20 | COILED IN FIBER OPTIC INTERCONNECT CENTER | NO CONNECTION (LATERAL STRANDS COILED IN SPLICE CLOSURE) | |
| | Yellow 9 | 21 | COILED IN FIBER OPTIC INTERCONNECT CENTER | NO CONNECTION (LATERAL STRANDS COILED IN SPLICE CLOSURE) | |
| | Violet 10 | 22 | COILED IN FIBER OPTIC INTERCONNECT CENTER | NO CONNECTION (LATERAL STRANDS COILED IN SPLICE CLOSURE) | |
| | Rose 11 | 23 | COILED IN FIBER OPTIC INTERCONNECT CENTER | NO CONNECTION (LATERAL STRANDS COILED IN SPLICE CLOSURE) | |
| | Aqua 12 | 24 | COILED IN FIBER OPTIC INTERCONNECT CENTER | NO CONNECTION (LATERAL STRANDS COILED IN SPLICE CLOSURE) | |

MODEL: Default
FILE NAME: pw:\\jk-pw.bentley.com:jk-pw-01\Documents\01 Active Projects\HAVC-CHS-1689959100 - IL 64\Phase III\2 Design\CADD\Plan Sheets\Communications\West Corridor\108121-sht-comm-lateral-20_KHA.dgn

Kimley»Horn
© 2023 KIMLEY-HORN AND ASSOCIATES, INC.
4201 WINFIELD ROAD, SUITE 600
WARRENVILLE, IL 60555
PHONE: 630-487-5550
WWW.KIMLEY-HORN.COM

| | | |
|---|---|---|
| USER NAME = | DESIGNED - | REVISED - |
| | DRAWN - | REVISED - |
| PLOT SCALE = | CHECKED - | REVISED - |
| PLOT DATE = | DATE - | REVISED - |

**STATE OF ILLINOIS**
**DEPARTMENT OF TRANSPORTATION**

**FIBER OPTIC LATERAL CABLE SPLICE ASSIGNMENTS**
**LCF–NO–003g**

SCALE: | SHEET OF SHEETS | STA. TO STA.

| F.A.P. RTE. | SECTION | COUNTY | TOTAL SHEETS | SHEET NO. |
|---|---|---|---|---|
| 307 | 2020-263-SUR,SW&TS | DUPAGE | 529 | 460 |
| | | CONTRACT NO. 62N33 | | |
| | ILLINOIS | FED. AID PROJECT | | |

| LATERAL CABLE FIBER ASSIGNMENTS | | | | ORIGINATION | CAB-NO-012 |
|---|---|---|---|---|---|
| LATERAL CABLE DESIGNATION | | | LCF-NO-003a | DESTINATION | CMV-NO-012 |
| BUFFER TUBE | FIBER | FIBER NO. | CABINET CONNECTIONS | DISTRIBUTION CABLE CONNECTIONS | |
| BLUE | Blue 1 | 1 | PATCH PANEL "A" PORT 1 (JUMPERED TO LAYER II ETHERNET SWITCH) | DCF-NO-003 (WB), FIBER 37 | |
| | Orange 2 | 2 | PATCH PANEL "A" PORT 2 (JUMPERED TO LAYER II ETHERNET SWITCH) | DCF-NO-003 (WB), FIBER 38 | |
| | Green 3 | 3 | PATCH PANEL "A" PORT 3 | NO CONNECTION (LATERAL STRANDS COILED IN SPLICE CLOSURE) | |
| | Brown 4 | 4 | PATCH PANEL "A" PORT 4 | NO CONNECTION (LATERAL STRANDS COILED IN SPLICE CLOSURE) | |
| | Slate 5 | 5 | PATCH PANEL "A" PORT 5 | NO CONNECTION (LATERAL STRANDS COILED IN SPLICE CLOSURE) | |
| | White 6 | 6 | PATCH PANEL "A" PORT 6 | NO CONNECTION (LATERAL STRANDS COILED IN SPLICE CLOSURE) | |
| | Red 7 | 7 | PATCH PANEL "A" PORT 7 (JUMPERED TO LAYER II ETHERNET SWITCH) | DCF-NO-003 (EB), FIBER 37 | |
| | Black 8 | 8 | PATCH PANEL "A" PORT 8 (JUMPERED TO LAYER II ETHERNET SWITCH) | DCF-NO-003 (EB), FIBER 38 | |
| | Yellow 9 | 9 | PATCH PANEL "A" PORT 9 | NO CONNECTION (LATERAL STRANDS COILED IN SPLICE CLOSURE) | |
| | Violet 10 | 10 | PATCH PANEL "A" PORT 10 | NO CONNECTION (LATERAL STRANDS COILED IN SPLICE CLOSURE) | |
| | Rose 11 | 11 | PATCH PANEL "A" PORT 11 | NO CONNECTION (LATERAL STRANDS COILED IN SPLICE CLOSURE) | |
| | Aqua 12 | 12 | PATCH PANEL "A" PORT 12 | NO CONNECTION (LATERAL STRANDS COILED IN SPLICE CLOSURE) | |
| ORANGE | Blue 1 | 13 | COILED IN FIBER OPTIC INTERCONNECT CENTER | NO CONNECTION (LATERAL STRANDS COILED IN SPLICE CLOSURE) | |
| | Orange 2 | 14 | COILED IN FIBER OPTIC INTERCONNECT CENTER | NO CONNECTION (LATERAL STRANDS COILED IN SPLICE CLOSURE) | |
| | Green 3 | 15 | COILED IN FIBER OPTIC INTERCONNECT CENTER | NO CONNECTION (LATERAL STRANDS COILED IN SPLICE CLOSURE) | |
| | Brown 4 | 16 | COILED IN FIBER OPTIC INTERCONNECT CENTER | NO CONNECTION (LATERAL STRANDS COILED IN SPLICE CLOSURE) | |
| | Slate 5 | 17 | COILED IN FIBER OPTIC INTERCONNECT CENTER | NO CONNECTION (LATERAL STRANDS COILED IN SPLICE CLOSURE) | |
| | White 6 | 18 | COILED IN FIBER OPTIC INTERCONNECT CENTER | NO CONNECTION (LATERAL STRANDS COILED IN SPLICE CLOSURE) | |
| | Red 7 | 19 | COILED IN FIBER OPTIC INTERCONNECT CENTER | NO CONNECTION (LATERAL STRANDS COILED IN SPLICE CLOSURE) | |
| | Black 8 | 20 | COILED IN FIBER OPTIC INTERCONNECT CENTER | NO CONNECTION (LATERAL STRANDS COILED IN SPLICE CLOSURE) | |
| | Yellow 9 | 21 | COILED IN FIBER OPTIC INTERCONNECT CENTER | NO CONNECTION (LATERAL STRANDS COILED IN SPLICE CLOSURE) | |
| | Violet 10 | 22 | COILED IN FIBER OPTIC INTERCONNECT CENTER | NO CONNECTION (LATERAL STRANDS COILED IN SPLICE CLOSURE) | |
| | Rose 11 | 23 | COILED IN FIBER OPTIC INTERCONNECT CENTER | NO CONNECTION (LATERAL STRANDS COILED IN SPLICE CLOSURE) | |
| | Aqua 12 | 24 | COILED IN FIBER OPTIC INTERCONNECT CENTER | NO CONNECTION (LATERAL STRANDS COILED IN SPLICE CLOSURE) | |

MODEL: Default
FILE NAME: pw:\\jk-pw.bentley.com:jk-pw-01\Documents\01 Active Projects\HAWK-CHS-1689593100 - IL 64\Phase III\2 Design\CADD\Plan Sheets\Communications\West Corridor\108121-sht-comm-lateral-21_KHA.dgn

Kimley»Horn
© 2023 KIMLEY-HORN AND ASSOCIATES, INC.
4201 WINFIELD ROAD, SUITE 600
WARRENVILLE, IL 60555
PHONE: 630-487-5550
WWW.KIMLEY-HORN.COM

| | | |
|---|---|---|
| USER NAME = | DESIGNED - | REVISED - |
| | DRAWN - | REVISED - |
| PLOT SCALE = | CHECKED - | REVISED - |
| PLOT DATE = | DATE - | REVISED - |

**STATE OF ILLINOIS**
**DEPARTMENT OF TRANSPORTATION**

**FIBER OPTIC LATERAL CABLE SPLICE ASSIGNMENTS**
**LCF–NO–003a**

SCALE: | SHEET OF SHEETS | STA. TO STA.

| F.A.P. RTE. | SECTION | COUNTY | TOTAL SHEETS | SHEET NO. |
|---|---|---|---|---|
| 307 | 2020-263-SUR,SW&TS | DUPAGE | 529 | 461 |
| | | CONTRACT NO. 62N33 | | |
| | ILLINOIS | FED. AID PROJECT | | |

| LATERAL CABLE FIBER ASSIGNMENTS | | | | ORIGINATION | CAB-NO-012A |
|---|---|---|---|---|---|
| LATERAL CABLE DESIGNATION | | | LCF-NO-003b | DESTINATION | CMV-NO-012C |
| BUFFER TUBE | FIBER | FIBER NO. | CABINET CONNECTIONS | DISTRIBUTION CABLE CONNECTIONS | |
| BLUE | Blue 1 | 1 | PATCH PANEL "A" PORT 1 (JUMPERED TO LAYER II ETHERNET SWITCH) | DCF-NO-003 (WB), FIBER 13 | |
| | Orange 2 | 2 | PATCH PANEL "A" PORT 2 (JUMPERED TO LAYER II ETHERNET SWITCH) | DCF-NO-003 (WB), FIBER 14 | |
| | Green 3 | 3 | PATCH PANEL "A" PORT 3 | NO CONNECTION (LATERAL STRANDS COILED IN SPLICE CLOSURE) | |
| | Brown 4 | 4 | PATCH PANEL "A" PORT 4 | NO CONNECTION (LATERAL STRANDS COILED IN SPLICE CLOSURE) | |
| | Slate 5 | 5 | PATCH PANEL "A" PORT 5 | NO CONNECTION (LATERAL STRANDS COILED IN SPLICE CLOSURE) | |
| | White 6 | 6 | PATCH PANEL "A" PORT 6 | NO CONNECTION (LATERAL STRANDS COILED IN SPLICE CLOSURE) | |
| | Red 7 | 7 | PATCH PANEL "A" PORT 7 (JUMPERED TO LAYER II ETHERNET SWITCH) | DCF-NO-003 (EB), FIBER 13 | |
| | Black 8 | 8 | PATCH PANEL "A" PORT 8 (JUMPERED TO LAYER II ETHERNET SWITCH) | DCF-NO-003 (EB), FIBER 14 | |
| | Yellow 9 | 9 | PATCH PANEL "A" PORT 9 | NO CONNECTION (LATERAL STRANDS COILED IN SPLICE CLOSURE) | |
| | Violet 10 | 10 | PATCH PANEL "A" PORT 10 | NO CONNECTION (LATERAL STRANDS COILED IN SPLICE CLOSURE) | |
| | Rose 11 | 11 | PATCH PANEL "A" PORT 11 | NO CONNECTION (LATERAL STRANDS COILED IN SPLICE CLOSURE) | |
| | Aqua 12 | 12 | PATCH PANEL "A" PORT 12 | NO CONNECTION (LATERAL STRANDS COILED IN SPLICE CLOSURE) | |
| ORANGE | Blue 1 | 13 | COILED IN FIBER OPTIC INTERCONNECT CENTER | NO CONNECTION (LATERAL STRANDS COILED IN SPLICE CLOSURE) | |
| | Orange 2 | 14 | COILED IN FIBER OPTIC INTERCONNECT CENTER | NO CONNECTION (LATERAL STRANDS COILED IN SPLICE CLOSURE) | |
| | Green 3 | 15 | COILED IN FIBER OPTIC INTERCONNECT CENTER | NO CONNECTION (LATERAL STRANDS COILED IN SPLICE CLOSURE) | |
| | Brown 4 | 16 | COILED IN FIBER OPTIC INTERCONNECT CENTER | NO CONNECTION (LATERAL STRANDS COILED IN SPLICE CLOSURE) | |
| | Slate 5 | 17 | COILED IN FIBER OPTIC INTERCONNECT CENTER | NO CONNECTION (LATERAL STRANDS COILED IN SPLICE CLOSURE) | |
| | White 6 | 18 | COILED IN FIBER OPTIC INTERCONNECT CENTER | NO CONNECTION (LATERAL STRANDS COILED IN SPLICE CLOSURE) | |
| | Red 7 | 19 | COILED IN FIBER OPTIC INTERCONNECT CENTER | NO CONNECTION (LATERAL STRANDS COILED IN SPLICE CLOSURE) | |
| | Black 8 | 20 | COILED IN FIBER OPTIC INTERCONNECT CENTER | NO CONNECTION (LATERAL STRANDS COILED IN SPLICE CLOSURE) | |
| | Yellow 9 | 21 | COILED IN FIBER OPTIC INTERCONNECT CENTER | NO CONNECTION (LATERAL STRANDS COILED IN SPLICE CLOSURE) | |
| | Violet 10 | 22 | COILED IN FIBER OPTIC INTERCONNECT CENTER | NO CONNECTION (LATERAL STRANDS COILED IN SPLICE CLOSURE) | |
| | Rose 11 | 23 | COILED IN FIBER OPTIC INTERCONNECT CENTER | NO CONNECTION (LATERAL STRANDS COILED IN SPLICE CLOSURE) | |
| | Aqua 12 | 24 | COILED IN FIBER OPTIC INTERCONNECT CENTER | NO CONNECTION (LATERAL STRANDS COILED IN SPLICE CLOSURE) | |

MODEL: Default
FILE NAME: pw:\\jk-pw.bentley.com:jk-pw-01\Documents\01 Active Projects\HWY-CHS-1689593100 - IL 64\Phase III\2 Design\CADD\Plan Sheets\Communications\West Corridor\108121-sht-comm-lateral-22_KHA.dgn

Kimley»Horn
© 2023 KIMLEY-HORN AND ASSOCIATES, INC.
4001 WINFIELD ROAD, SUITE 600
WARRENVILLE, IL 60555
PHONE: 630-487-5550
WWW.KIMLEY-HORN.COM

| | | |
|---|---|---|
| USER NAME = | DESIGNED - | REVISED - |
| | DRAWN - | REVISED - |
| PLOT SCALE = | CHECKED - | REVISED - |
| PLOT DATE = | DATE - | REVISED - |

**STATE OF ILLINOIS**
**DEPARTMENT OF TRANSPORTATION**

**FIBER OPTIC LATERAL CABLE SPLICE ASSIGNMENTS**
**LCF–NO–003b**

SCALE: | SHEET OF SHEETS | STA. TO STA.

| F.A.P. RTE. | SECTION | COUNTY | TOTAL SHEETS | SHEET NO. |
|---|---|---|---|---|
| 307 | 2020-263-SUR,SW&TS | DUPAGE | 529 | 462 |
| | | CONTRACT NO. 62N33 | | |
| | ILLINOIS | FED. AID PROJECT | | |

| LATERAL CABLE FIBER ASSIGNMENTS | | | | ORIGINATION | CAB-NO-012B |
|---|---|---|---|---|---|
| LATERAL CABLE DESIGNATION | | | LCF-NO-003c | DESTINATION | CMV-NO-012E |
| BUFFER TUBE | FIBER | FIBER NO. | CABINET CONNECTIONS | DISTRIBUTION CABLE CONNECTIONS | |
| BLUE | Blue 1 | 1 | PATCH PANEL "A" PORT 1 (JUMPERED TO LAYER II ETHERNET SWITCH) | DCF-NO-003 (WB), FIBER 15 | |
| | Orange 2 | 2 | PATCH PANEL "A" PORT 2 (JUMPERED TO LAYER II ETHERNET SWITCH) | DCF-NO-003 (WB), FIBER 16 | |
| | Green 3 | 3 | PATCH PANEL "A" PORT 3 | NO CONNECTION (LATERAL STRANDS COILED IN SPLICE CLOSURE) | |
| | Brown 4 | 4 | PATCH PANEL "A" PORT 4 | NO CONNECTION (LATERAL STRANDS COILED IN SPLICE CLOSURE) | |
| | Slate 5 | 5 | PATCH PANEL "A" PORT 5 | NO CONNECTION (LATERAL STRANDS COILED IN SPLICE CLOSURE) | |
| | White 6 | 6 | PATCH PANEL "A" PORT 6 | NO CONNECTION (LATERAL STRANDS COILED IN SPLICE CLOSURE) | |
| | Red 7 | 7 | PATCH PANEL "A" PORT 7 (JUMPERED TO LAYER II ETHERNET SWITCH) | DCF-NO-003 (EB), FIBER 15 | |
| | Black 8 | 8 | PATCH PANEL "A" PORT 8 (JUMPERED TO LAYER II ETHERNET SWITCH) | DCF-NO-003 (EB), FIBER 16 | |
| | Yellow 9 | 9 | PATCH PANEL "A" PORT 9 | NO CONNECTION (LATERAL STRANDS COILED IN SPLICE CLOSURE) | |
| | Violet 10 | 10 | PATCH PANEL "A" PORT 10 | NO CONNECTION (LATERAL STRANDS COILED IN SPLICE CLOSURE) | |
| | Rose 11 | 11 | PATCH PANEL "A" PORT 11 | NO CONNECTION (LATERAL STRANDS COILED IN SPLICE CLOSURE) | |
| | Aqua 12 | 12 | PATCH PANEL "A" PORT 12 | NO CONNECTION (LATERAL STRANDS COILED IN SPLICE CLOSURE) | |
| ORANGE | Blue 1 | 13 | COILED IN FIBER OPTIC INTERCONNECT CENTER | NO CONNECTION (LATERAL STRANDS COILED IN SPLICE CLOSURE) | |
| | Orange 2 | 14 | COILED IN FIBER OPTIC INTERCONNECT CENTER | NO CONNECTION (LATERAL STRANDS COILED IN SPLICE CLOSURE) | |
| | Green 3 | 15 | COILED IN FIBER OPTIC INTERCONNECT CENTER | NO CONNECTION (LATERAL STRANDS COILED IN SPLICE CLOSURE) | |
| | Brown 4 | 16 | COILED IN FIBER OPTIC INTERCONNECT CENTER | NO CONNECTION (LATERAL STRANDS COILED IN SPLICE CLOSURE) | |
| | Slate 5 | 17 | COILED IN FIBER OPTIC INTERCONNECT CENTER | NO CONNECTION (LATERAL STRANDS COILED IN SPLICE CLOSURE) | |
| | White 6 | 18 | COILED IN FIBER OPTIC INTERCONNECT CENTER | NO CONNECTION (LATERAL STRANDS COILED IN SPLICE CLOSURE) | |
| | Red 7 | 19 | COILED IN FIBER OPTIC INTERCONNECT CENTER | NO CONNECTION (LATERAL STRANDS COILED IN SPLICE CLOSURE) | |
| | Black 8 | 20 | COILED IN FIBER OPTIC INTERCONNECT CENTER | NO CONNECTION (LATERAL STRANDS COILED IN SPLICE CLOSURE) | |
| | Yellow 9 | 21 | COILED IN FIBER OPTIC INTERCONNECT CENTER | NO CONNECTION (LATERAL STRANDS COILED IN SPLICE CLOSURE) | |
| | Violet 10 | 22 | COILED IN FIBER OPTIC INTERCONNECT CENTER | NO CONNECTION (LATERAL STRANDS COILED IN SPLICE CLOSURE) | |
| | Rose 11 | 23 | COILED IN FIBER OPTIC INTERCONNECT CENTER | NO CONNECTION (LATERAL STRANDS COILED IN SPLICE CLOSURE) | |
| | Aqua 12 | 24 | COILED IN FIBER OPTIC INTERCONNECT CENTER | NO CONNECTION (LATERAL STRANDS COILED IN SPLICE CLOSURE) | |

MODEL: Default
FILE NAME: pw:\\jk-pw.bentley.com:jk-pw-01\Documents\01 Active Projects\HAVC-CHS-1689593100 - IL 64\Phase III\2 Design\CADD\Plan Sheets\Communications\West Corridor\108121-sht-comm-lateral-23_KHA.dgn

Kimley»Horn
© 2023 KIMLEY-HORN AND ASSOCIATES, INC.
4201 WINFIELD ROAD, SUITE 600
WARRENVILLE, IL 60555
PHONE: 630-487-5550
WWW.KIMLEY-HORN.COM

| | | |
|---|---|---|
| USER NAME = | DESIGNED - | REVISED - |
| | DRAWN - | REVISED - |
| PLOT SCALE = | CHECKED - | REVISED - |
| PLOT DATE = | DATE - | REVISED - |

**STATE OF ILLINOIS**
**DEPARTMENT OF TRANSPORTATION**

**FIBER OPTIC LATERAL CABLE SPLICE ASSIGNMENTS**
**LCF–NO–003c**

SCALE: | SHEET OF SHEETS | STA. TO STA.

| F.A.P. RTE. | SECTION | COUNTY | TOTAL SHEETS | SHEET NO. |
|---|---|---|---|---|
| 307 | 2020-263-SUR,SW&TS | DUPAGE | 529 | 463 |
| | | CONTRACT NO. 62N33 | | |
| | ILLINOIS | FED. AID PROJECT | | |

| LATERAL CABLE FIBER ASSIGNMENTS | | | | ORIGINATION | CAB-NO-013 |
|---|---|---|---|---|---|
| LATERAL CABLE DESIGNATION | | | LCF-NO-003d | DESTINATION | CMV-NO-013A |
| BUFFER TUBE | FIBER | FIBER NO. | CABINET CONNECTIONS | DISTRIBUTION CABLE CONNECTIONS | |
| BLUE | Blue 1 | 1 | PATCH PANEL "A" PORT 1 (JUMPERED TO LAYER II ETHERNET SWITCH) | DCF-NO-003 (WB), FIBER 17 | |
| | Orange 2 | 2 | PATCH PANEL "A" PORT 2 (JUMPERED TO LAYER II ETHERNET SWITCH) | DCF-NO-003 (WB), FIBER 18 | |
| | Green 3 | 3 | PATCH PANEL "A" PORT 3 | NO CONNECTION (LATERAL STRANDS COILED IN SPLICE CLOSURE) | |
| | Brown 4 | 4 | PATCH PANEL "A" PORT 4 | NO CONNECTION (LATERAL STRANDS COILED IN SPLICE CLOSURE) | |
| | Slate 5 | 5 | PATCH PANEL "A" PORT 5 | NO CONNECTION (LATERAL STRANDS COILED IN SPLICE CLOSURE) | |
| | White 6 | 6 | PATCH PANEL "A" PORT 6 | NO CONNECTION (LATERAL STRANDS COILED IN SPLICE CLOSURE) | |
| | Red 7 | 7 | PATCH PANEL "A" PORT 7 (JUMPERED TO LAYER II ETHERNET SWITCH) | DCF-NO-003 (EB), FIBER 17 | |
| | Black 8 | 8 | PATCH PANEL "A" PORT 8 (JUMPERED TO LAYER II ETHERNET SWITCH) | DCF-NO-003 (EB), FIBER 18 | |
| | Yellow 9 | 9 | PATCH PANEL "A" PORT 9 | NO CONNECTION (LATERAL STRANDS COILED IN SPLICE CLOSURE) | |
| | Violet 10 | 10 | PATCH PANEL "A" PORT 10 | NO CONNECTION (LATERAL STRANDS COILED IN SPLICE CLOSURE) | |
| | Rose 11 | 11 | PATCH PANEL "A" PORT 11 | NO CONNECTION (LATERAL STRANDS COILED IN SPLICE CLOSURE) | |
| | Aqua 12 | 12 | PATCH PANEL "A" PORT 12 | NO CONNECTION (LATERAL STRANDS COILED IN SPLICE CLOSURE) | |
| ORANGE | Blue 1 | 13 | COILED IN FIBER OPTIC INTERCONNECT CENTER | NO CONNECTION (LATERAL STRANDS COILED IN SPLICE CLOSURE) | |
| | Orange 2 | 14 | COILED IN FIBER OPTIC INTERCONNECT CENTER | NO CONNECTION (LATERAL STRANDS COILED IN SPLICE CLOSURE) | |
| | Green 3 | 15 | COILED IN FIBER OPTIC INTERCONNECT CENTER | NO CONNECTION (LATERAL STRANDS COILED IN SPLICE CLOSURE) | |
| | Brown 4 | 16 | COILED IN FIBER OPTIC INTERCONNECT CENTER | NO CONNECTION (LATERAL STRANDS COILED IN SPLICE CLOSURE) | |
| | Slate 5 | 17 | COILED IN FIBER OPTIC INTERCONNECT CENTER | NO CONNECTION (LATERAL STRANDS COILED IN SPLICE CLOSURE) | |
| | White 6 | 18 | COILED IN FIBER OPTIC INTERCONNECT CENTER | NO CONNECTION (LATERAL STRANDS COILED IN SPLICE CLOSURE) | |
| | Red 7 | 19 | COILED IN FIBER OPTIC INTERCONNECT CENTER | NO CONNECTION (LATERAL STRANDS COILED IN SPLICE CLOSURE) | |
| | Black 8 | 20 | COILED IN FIBER OPTIC INTERCONNECT CENTER | NO CONNECTION (LATERAL STRANDS COILED IN SPLICE CLOSURE) | |
| | Yellow 9 | 21 | COILED IN FIBER OPTIC INTERCONNECT CENTER | NO CONNECTION (LATERAL STRANDS COILED IN SPLICE CLOSURE) | |
| | Violet 10 | 22 | COILED IN FIBER OPTIC INTERCONNECT CENTER | NO CONNECTION (LATERAL STRANDS COILED IN SPLICE CLOSURE) | |
| | Rose 11 | 23 | COILED IN FIBER OPTIC INTERCONNECT CENTER | NO CONNECTION (LATERAL STRANDS COILED IN SPLICE CLOSURE) | |
| | Aqua 12 | 24 | COILED IN FIBER OPTIC INTERCONNECT CENTER | NO CONNECTION (LATERAL STRANDS COILED IN SPLICE CLOSURE) | |

MODEL: Default
FILE NAME: pw:\\jk-pw.bentley.com:jk-pw-01\Documents\01 Active Projects\HAVC-CHS-1689593100 - IL 64\Phase III\2 Design\CADD\Plan Sheets\Communications\West Corridor\108121-sht-comm-lateral-24_KHA.dgn

Kimley»Horn
© 2023 KIMLEY-HORN AND ASSOCIATES, INC.
4201 WINFIELD ROAD, SUITE 600
WARRENVILLE, IL 60555
PHONE: 630-487-5550
WWW.KIMLEY-HORN.COM

| | | |
|---|---|---|
| USER NAME = | DESIGNED - | REVISED - |
| | DRAWN - | REVISED - |
| PLOT SCALE = | CHECKED - | REVISED - |
| PLOT DATE = | DATE - | REVISED - |

**STATE OF ILLINOIS**
**DEPARTMENT OF TRANSPORTATION**

**FIBER OPTIC LATERAL CABLE SPLICE ASSIGNMENTS**
**LCF–NO–003d**

SCALE: | SHEET OF SHEETS | STA. TO STA.

| F.A.P. RTE. | SECTION | COUNTY | TOTAL SHEETS | SHEET NO. |
|---|---|---|---|---|
| 307 | 2020-263-SUR,SW&TS | DUPAGE | 529 | 464 |
| | | CONTRACT NO. 62N33 | | |
| | ILLINOIS | FED. AID PROJECT | | |

| LATERAL CABLE FIBER ASSIGNMENTS | | | | ORIGINATION | CAB-NO-013A |
|---|---|---|---|---|---|
| LATERAL CABLE DESIGNATION | | | LCF-NO-003e | DESTINATION | CMV-NO-013D |
| BUFFER TUBE | FIBER | FIBER NO. | CABINET CONNECTIONS | DISTRIBUTION CABLE CONNECTIONS | |
| BLUE | Blue 1 | 1 | PATCH PANEL "A" PORT 1 (JUMPERED TO LAYER II ETHERNET SWITCH) | DCF-NO-003 (WB), FIBER 19 | |
| | Orange 2 | 2 | PATCH PANEL "A" PORT 2 (JUMPERED TO LAYER II ETHERNET SWITCH) | DCF-NO-003 (WB), FIBER 20 | |
| | Green 3 | 3 | PATCH PANEL "A" PORT 3 | NO CONNECTION (LATERAL STRANDS COILED IN SPLICE CLOSURE) | |
| | Brown 4 | 4 | PATCH PANEL "A" PORT 4 | NO CONNECTION (LATERAL STRANDS COILED IN SPLICE CLOSURE) | |
| | Slate 5 | 5 | PATCH PANEL "A" PORT 5 | NO CONNECTION (LATERAL STRANDS COILED IN SPLICE CLOSURE) | |
| | White 6 | 6 | PATCH PANEL "A" PORT 6 | NO CONNECTION (LATERAL STRANDS COILED IN SPLICE CLOSURE) | |
| | Red 7 | 7 | PATCH PANEL "A" PORT 7 (JUMPERED TO LAYER II ETHERNET SWITCH) | DCF-NO-003 (EB), FIBER 19 | |
| | Black 8 | 8 | PATCH PANEL "A" PORT 8 (JUMPERED TO LAYER II ETHERNET SWITCH) | DCF-NO-003 (EB), FIBER 20 | |
| | Yellow 9 | 9 | PATCH PANEL "A" PORT 9 | NO CONNECTION (LATERAL STRANDS COILED IN SPLICE CLOSURE) | |
| | Violet 10 | 10 | PATCH PANEL "A" PORT 10 | NO CONNECTION (LATERAL STRANDS COILED IN SPLICE CLOSURE) | |
| | Rose 11 | 11 | PATCH PANEL "A" PORT 11 | NO CONNECTION (LATERAL STRANDS COILED IN SPLICE CLOSURE) | |
| | Aqua 12 | 12 | PATCH PANEL "A" PORT 12 | NO CONNECTION (LATERAL STRANDS COILED IN SPLICE CLOSURE) | |
| ORANGE | Blue 1 | 13 | COILED IN FIBER OPTIC INTERCONNECT CENTER | NO CONNECTION (LATERAL STRANDS COILED IN SPLICE CLOSURE) | |
| | Orange 2 | 14 | COILED IN FIBER OPTIC INTERCONNECT CENTER | NO CONNECTION (LATERAL STRANDS COILED IN SPLICE CLOSURE) | |
| | Green 3 | 15 | COILED IN FIBER OPTIC INTERCONNECT CENTER | NO CONNECTION (LATERAL STRANDS COILED IN SPLICE CLOSURE) | |
| | Brown 4 | 16 | COILED IN FIBER OPTIC INTERCONNECT CENTER | NO CONNECTION (LATERAL STRANDS COILED IN SPLICE CLOSURE) | |
| | Slate 5 | 17 | COILED IN FIBER OPTIC INTERCONNECT CENTER | NO CONNECTION (LATERAL STRANDS COILED IN SPLICE CLOSURE) | |
| | White 6 | 18 | COILED IN FIBER OPTIC INTERCONNECT CENTER | NO CONNECTION (LATERAL STRANDS COILED IN SPLICE CLOSURE) | |
| | Red 7 | 19 | COILED IN FIBER OPTIC INTERCONNECT CENTER | NO CONNECTION (LATERAL STRANDS COILED IN SPLICE CLOSURE) | |
| | Black 8 | 20 | COILED IN FIBER OPTIC INTERCONNECT CENTER | NO CONNECTION (LATERAL STRANDS COILED IN SPLICE CLOSURE) | |
| | Yellow 9 | 21 | COILED IN FIBER OPTIC INTERCONNECT CENTER | NO CONNECTION (LATERAL STRANDS COILED IN SPLICE CLOSURE) | |
| | Violet 10 | 22 | COILED IN FIBER OPTIC INTERCONNECT CENTER | NO CONNECTION (LATERAL STRANDS COILED IN SPLICE CLOSURE) | |
| | Rose 11 | 23 | COILED IN FIBER OPTIC INTERCONNECT CENTER | NO CONNECTION (LATERAL STRANDS COILED IN SPLICE CLOSURE) | |
| | Aqua 12 | 24 | COILED IN FIBER OPTIC INTERCONNECT CENTER | NO CONNECTION (LATERAL STRANDS COILED IN SPLICE CLOSURE) | |

MODEL: Default
FILE NAME: pw:\\jk-pw.bentley.com:jk-pw-01\Documents\01 Active Projects\HAVC-CHS-1689593100 - IL 64\Phase III\2 Design\CADD\Plan Sheets\Communications\West Corridor\108121-sht-comm-lateral-25_KHA.dgn

Kimley»Horn
© 2023 KIMLEY-HORN AND ASSOCIATES, INC.
4201 WINFIELD ROAD, SUITE 600
WARRENVILLE, IL 60555
PHONE: 630-487-5550
WWW.KIMLEY-HORN.COM

| | | |
|---|---|---|
| USER NAME = | DESIGNED - | REVISED - |
| | DRAWN - | REVISED - |
| PLOT SCALE = | CHECKED - | REVISED - |
| PLOT DATE = | DATE - | REVISED - |

**STATE OF ILLINOIS**
**DEPARTMENT OF TRANSPORTATION**

**FIBER OPTIC LATERAL CABLE SPLICE ASSIGNMENTS**
**LCF–NO–003e**

SCALE: | SHEET OF SHEETS | STA. TO STA.

| F.A.P. RTE. | SECTION | COUNTY | TOTAL SHEETS | SHEET NO. |
|---|---|---|---|---|
| 307 | 2020-263-SUR,SW&TS | DUPAGE | 529 | 465 |
| | | CONTRACT NO. 62N33 | | |
| | ILLINOIS | FED. AID PROJECT | | |

| LATERAL CABLE FIBER ASSIGNMENTS | | | | ORIGINATION | CAB-NO-013B |
|---|---|---|---|---|---|
| LATERAL CABLE DESIGNATION | | | LCF-NO-003f | DESTINATION | CMV-NO-013F |
| BUFFER TUBE | FIBER | FIBER NO. | CABINET CONNECTIONS | DISTRIBUTION CABLE CONNECTIONS | |
| BLUE | Blue 1 | 1 | PATCH PANEL "A" PORT 1 (JUMPERED TO LAYER II ETHERNET SWITCH) | DCF-NO-003 (WB), FIBER 21 | |
| | Orange 2 | 2 | PATCH PANEL "A" PORT 2 (JUMPERED TO LAYER II ETHERNET SWITCH) | DCF-NO-003 (WB), FIBER 22 | |
| | Green 3 | 3 | PATCH PANEL "A" PORT 3 | NO CONNECTION (LATERAL STRANDS COILED IN SPLICE CLOSURE) | |
| | Brown 4 | 4 | PATCH PANEL "A" PORT 4 | NO CONNECTION (LATERAL STRANDS COILED IN SPLICE CLOSURE) | |
| | Slate 5 | 5 | PATCH PANEL "A" PORT 5 | NO CONNECTION (LATERAL STRANDS COILED IN SPLICE CLOSURE) | |
| | White 6 | 6 | PATCH PANEL "A" PORT 6 | NO CONNECTION (LATERAL STRANDS COILED IN SPLICE CLOSURE) | |
| | Red 7 | 7 | PATCH PANEL "A" PORT 7 (JUMPERED TO LAYER II ETHERNET SWITCH) | DCF-NO-003 (EB), FIBER 21 | |
| | Black 8 | 8 | PATCH PANEL "A" PORT 8 (JUMPERED TO LAYER II ETHERNET SWITCH) | DCF-NO-003 (EB), FIBER 22 | |
| | Yellow 9 | 9 | PATCH PANEL "A" PORT 9 | NO CONNECTION (LATERAL STRANDS COILED IN SPLICE CLOSURE) | |
| | Violet 10 | 10 | PATCH PANEL "A" PORT 10 | NO CONNECTION (LATERAL STRANDS COILED IN SPLICE CLOSURE) | |
| | Rose 11 | 11 | PATCH PANEL "A" PORT 11 | NO CONNECTION (LATERAL STRANDS COILED IN SPLICE CLOSURE) | |
| | Aqua 12 | 12 | PATCH PANEL "A" PORT 12 | NO CONNECTION (LATERAL STRANDS COILED IN SPLICE CLOSURE) | |
| ORANGE | Blue 1 | 13 | COILED IN FIBER OPTIC INTERCONNECT CENTER | NO CONNECTION (LATERAL STRANDS COILED IN SPLICE CLOSURE) | |
| | Orange 2 | 14 | COILED IN FIBER OPTIC INTERCONNECT CENTER | NO CONNECTION (LATERAL STRANDS COILED IN SPLICE CLOSURE) | |
| | Green 3 | 15 | COILED IN FIBER OPTIC INTERCONNECT CENTER | NO CONNECTION (LATERAL STRANDS COILED IN SPLICE CLOSURE) | |
| | Brown 4 | 16 | COILED IN FIBER OPTIC INTERCONNECT CENTER | NO CONNECTION (LATERAL STRANDS COILED IN SPLICE CLOSURE) | |
| | Slate 5 | 17 | COILED IN FIBER OPTIC INTERCONNECT CENTER | NO CONNECTION (LATERAL STRANDS COILED IN SPLICE CLOSURE) | |
| | White 6 | 18 | COILED IN FIBER OPTIC INTERCONNECT CENTER | NO CONNECTION (LATERAL STRANDS COILED IN SPLICE CLOSURE) | |
| | Red 7 | 19 | COILED IN FIBER OPTIC INTERCONNECT CENTER | NO CONNECTION (LATERAL STRANDS COILED IN SPLICE CLOSURE) | |
| | Black 8 | 20 | COILED IN FIBER OPTIC INTERCONNECT CENTER | NO CONNECTION (LATERAL STRANDS COILED IN SPLICE CLOSURE) | |
| | Yellow 9 | 21 | COILED IN FIBER OPTIC INTERCONNECT CENTER | NO CONNECTION (LATERAL STRANDS COILED IN SPLICE CLOSURE) | |
| | Violet 10 | 22 | COILED IN FIBER OPTIC INTERCONNECT CENTER | NO CONNECTION (LATERAL STRANDS COILED IN SPLICE CLOSURE) | |
| | Rose 11 | 23 | COILED IN FIBER OPTIC INTERCONNECT CENTER | NO CONNECTION (LATERAL STRANDS COILED IN SPLICE CLOSURE) | |
| | Aqua 12 | 24 | COILED IN FIBER OPTIC INTERCONNECT CENTER | NO CONNECTION (LATERAL STRANDS COILED IN SPLICE CLOSURE) | |

MODEL: Default
FILE NAME: pw:\\jk-pw.bentley.com:jk-pw-01\Documents\01 Active Projects\HWY-CHS-1689593100 - IL 64\Phase III\2 Design\CADD\Plan Sheets\Communications\West Corridor\108121-sht-comm-lateral-26_KHA.dgn

Kimley»Horn
© 2023 KIMLEY-HORN AND ASSOCIATES, INC.
4201 WINFIELD ROAD, SUITE 600
WARRENVILLE, IL 60555
PHONE: 630-487-5550
WWW.KIMLEY-HORN.COM

| | | |
|---|---|---|
| USER NAME = | DESIGNED - | REVISED - |
| | DRAWN - | REVISED - |
| PLOT SCALE = | CHECKED - | REVISED - |
| PLOT DATE = | DATE - | REVISED - |

**STATE OF ILLINOIS**
**DEPARTMENT OF TRANSPORTATION**

**FIBER OPTIC LATERAL CABLE SPLICE ASSIGNMENTS**
**LCF–NO–003f**

SCALE: | SHEET OF SHEETS | STA. TO STA.

| F.A.P. RTE. | SECTION | COUNTY | TOTAL SHEETS | SHEET NO. |
|---|---|---|---|---|
| 307 | 2020-263-SUR,SW&TS | DUPAGE | 529 | 466 |
| | | CONTRACT NO. 62N33 | | |
| | ILLINOIS | FED. AID PROJECT | | |

| LATERAL CABLE FIBER ASSIGNMENTS | | | | ORIGINATION | CAB-NO-014 |
|---|---|---|---|---|---|
| LATERAL CABLE DESIGNATION | | | LCF-NO-003g | DESTINATION | CMV-NO-014A |
| BUFFER TUBE | FIBER | FIBER NO. | CABINET CONNECTIONS | DISTRIBUTION CABLE CONNECTIONS | |
| BLUE | Blue 1 | 1 | PATCH PANEL "A" PORT 1 (JUMPERED TO LAYER II ETHERNET SWITCH) | DCF-NO-003 (WB), FIBER 23 | |
| | Orange 2 | 2 | PATCH PANEL "A" PORT 2 (JUMPERED TO LAYER II ETHERNET SWITCH) | DCF-NO-003 (WB), FIBER 24 | |
| | Green 3 | 3 | PATCH PANEL "A" PORT 3 | NO CONNECTION (LATERAL STRANDS COILED IN SPLICE CLOSURE) | |
| | Brown 4 | 4 | PATCH PANEL "A" PORT 4 | NO CONNECTION (LATERAL STRANDS COILED IN SPLICE CLOSURE) | |
| | Slate 5 | 5 | PATCH PANEL "A" PORT 5 | NO CONNECTION (LATERAL STRANDS COILED IN SPLICE CLOSURE) | |
| | White 6 | 6 | PATCH PANEL "A" PORT 6 | NO CONNECTION (LATERAL STRANDS COILED IN SPLICE CLOSURE) | |
| | Red 7 | 7 | PATCH PANEL "A" PORT 7 (JUMPERED TO LAYER II ETHERNET SWITCH) | DCF-NO-003 (EB), FIBER 23 | |
| | Black 8 | 8 | PATCH PANEL "A" PORT 8 (JUMPERED TO LAYER II ETHERNET SWITCH) | DCF-NO-003 (EB), FIBER 24 | |
| | Yellow 9 | 9 | PATCH PANEL "A" PORT 9 | NO CONNECTION (LATERAL STRANDS COILED IN SPLICE CLOSURE) | |
| | Violet 10 | 10 | PATCH PANEL "A" PORT 10 | NO CONNECTION (LATERAL STRANDS COILED IN SPLICE CLOSURE) | |
| | Rose 11 | 11 | PATCH PANEL "A" PORT 11 | NO CONNECTION (LATERAL STRANDS COILED IN SPLICE CLOSURE) | |
| | Aqua 12 | 12 | PATCH PANEL "A" PORT 12 | NO CONNECTION (LATERAL STRANDS COILED IN SPLICE CLOSURE) | |
| ORANGE | Blue 1 | 13 | COILED IN FIBER OPTIC INTERCONNECT CENTER | NO CONNECTION (LATERAL STRANDS COILED IN SPLICE CLOSURE) | |
| | Orange 2 | 14 | COILED IN FIBER OPTIC INTERCONNECT CENTER | NO CONNECTION (LATERAL STRANDS COILED IN SPLICE CLOSURE) | |
| | Green 3 | 15 | COILED IN FIBER OPTIC INTERCONNECT CENTER | NO CONNECTION (LATERAL STRANDS COILED IN SPLICE CLOSURE) | |
| | Brown 4 | 16 | COILED IN FIBER OPTIC INTERCONNECT CENTER | NO CONNECTION (LATERAL STRANDS COILED IN SPLICE CLOSURE) | |
| | Slate 5 | 17 | COILED IN FIBER OPTIC INTERCONNECT CENTER | NO CONNECTION (LATERAL STRANDS COILED IN SPLICE CLOSURE) | |
| | White 6 | 18 | COILED IN FIBER OPTIC INTERCONNECT CENTER | NO CONNECTION (LATERAL STRANDS COILED IN SPLICE CLOSURE) | |
| | Red 7 | 19 | COILED IN FIBER OPTIC INTERCONNECT CENTER | NO CONNECTION (LATERAL STRANDS COILED IN SPLICE CLOSURE) | |
| | Black 8 | 20 | COILED IN FIBER OPTIC INTERCONNECT CENTER | NO CONNECTION (LATERAL STRANDS COILED IN SPLICE CLOSURE) | |
| | Yellow 9 | 21 | COILED IN FIBER OPTIC INTERCONNECT CENTER | NO CONNECTION (LATERAL STRANDS COILED IN SPLICE CLOSURE) | |
| | Violet 10 | 22 | COILED IN FIBER OPTIC INTERCONNECT CENTER | NO CONNECTION (LATERAL STRANDS COILED IN SPLICE CLOSURE) | |
| | Rose 11 | 23 | COILED IN FIBER OPTIC INTERCONNECT CENTER | NO CONNECTION (LATERAL STRANDS COILED IN SPLICE CLOSURE) | |
| | Aqua 12 | 24 | COILED IN FIBER OPTIC INTERCONNECT CENTER | NO CONNECTION (LATERAL STRANDS COILED IN SPLICE CLOSURE) | |

MODEL: Default
FILE NAME: pw:\\jk-pw.bentley.com:jk-pw-01\Documents\01 Active Projects\HAVC-CHS-1689959100 - IL 64\Phase III\2 Design\CADD\Plan Sheets\Communications\West Corridor\108121-sht-comm-lateral-27_KHA.dgn

Kimley»Horn
© 2023 KIMLEY-HORN AND ASSOCIATES, INC.
4201 WINFIELD ROAD, SUITE 600
WARRENVILLE, IL 60555
PHONE: 630-487-5550
WWW.KIMLEY-HORN.COM

| | | |
|---|---|---|
| USER NAME = | DESIGNED - | REVISED - |
| | DRAWN - | REVISED - |
| PLOT SCALE = | CHECKED - | REVISED - |
| PLOT DATE = | DATE - | REVISED - |

**STATE OF ILLINOIS**
**DEPARTMENT OF TRANSPORTATION**

**FIBER OPTIC LATERAL CABLE SPLICE ASSIGNMENTS**
**LCF–NO–003g**

SCALE: | SHEET OF SHEETS | STA. TO STA.

| F.A.P. RTE. | SECTION | COUNTY | TOTAL SHEETS | SHEET NO. |
|---|---|---|---|---|
| 307 | 2020-263-SUR,SW&TS | DUPAGE | 529 | 467 |
| | | CONTRACT NO. 62N33 | | |
| | ILLINOIS | FED. AID PROJECT | | |

| LATERAL CABLE FIBER ASSIGNMENTS | | | | ORIGINATION | CAB-NO-014A |
|---|---|---|---|---|---|
| LATERAL CABLE DESIGNATION | | | LCF-NO-003h | DESTINATION | CMV-NO-014E |
| BUFFER TUBE | FIBER | FIBER NO. | CABINET CONNECTIONS | DISTRIBUTION CABLE CONNECTIONS | |
| BLUE | Blue 1 | 1 | PATCH PANEL "A" PORT 1 (JUMPERED TO LAYER II ETHERNET SWITCH) | DCF-NO-003 (WB), FIBER 25 | |
| | Orange 2 | 2 | PATCH PANEL "A" PORT 2 (JUMPERED TO LAYER II ETHERNET SWITCH) | DCF-NO-003 (WB), FIBER 26 | |
| | Green 3 | 3 | PATCH PANEL "A" PORT 3 | NO CONNECTION (LATERAL STRANDS COILED IN SPLICE CLOSURE) | |
| | Brown 4 | 4 | PATCH PANEL "A" PORT 4 | NO CONNECTION (LATERAL STRANDS COILED IN SPLICE CLOSURE) | |
| | Slate 5 | 5 | PATCH PANEL "A" PORT 5 | NO CONNECTION (LATERAL STRANDS COILED IN SPLICE CLOSURE) | |
| | White 6 | 6 | PATCH PANEL "A" PORT 6 | NO CONNECTION (LATERAL STRANDS COILED IN SPLICE CLOSURE) | |
| | Red 7 | 7 | PATCH PANEL "A" PORT 7 (JUMPERED TO LAYER II ETHERNET SWITCH) | DCF-NO-003 (EB), FIBER 25 | |
| | Black 8 | 8 | PATCH PANEL "A" PORT 8 (JUMPERED TO LAYER II ETHERNET SWITCH) | DCF-NO-003 (EB), FIBER 26 | |
| | Yellow 9 | 9 | PATCH PANEL "A" PORT 9 | NO CONNECTION (LATERAL STRANDS COILED IN SPLICE CLOSURE) | |
| | Violet 10 | 10 | PATCH PANEL "A" PORT 10 | NO CONNECTION (LATERAL STRANDS COILED IN SPLICE CLOSURE) | |
| | Rose 11 | 11 | PATCH PANEL "A" PORT 11 | NO CONNECTION (LATERAL STRANDS COILED IN SPLICE CLOSURE) | |
| | Aqua 12 | 12 | PATCH PANEL "A" PORT 12 | NO CONNECTION (LATERAL STRANDS COILED IN SPLICE CLOSURE) | |
| ORANGE | Blue 1 | 13 | COILED IN FIBER OPTIC INTERCONNECT CENTER | NO CONNECTION (LATERAL STRANDS COILED IN SPLICE CLOSURE) | |
| | Orange 2 | 14 | COILED IN FIBER OPTIC INTERCONNECT CENTER | NO CONNECTION (LATERAL STRANDS COILED IN SPLICE CLOSURE) | |
| | Green 3 | 15 | COILED IN FIBER OPTIC INTERCONNECT CENTER | NO CONNECTION (LATERAL STRANDS COILED IN SPLICE CLOSURE) | |
| | Brown 4 | 16 | COILED IN FIBER OPTIC INTERCONNECT CENTER | NO CONNECTION (LATERAL STRANDS COILED IN SPLICE CLOSURE) | |
| | Slate 5 | 17 | COILED IN FIBER OPTIC INTERCONNECT CENTER | NO CONNECTION (LATERAL STRANDS COILED IN SPLICE CLOSURE) | |
| | White 6 | 18 | COILED IN FIBER OPTIC INTERCONNECT CENTER | NO CONNECTION (LATERAL STRANDS COILED IN SPLICE CLOSURE) | |
| | Red 7 | 19 | COILED IN FIBER OPTIC INTERCONNECT CENTER | NO CONNECTION (LATERAL STRANDS COILED IN SPLICE CLOSURE) | |
| | Black 8 | 20 | COILED IN FIBER OPTIC INTERCONNECT CENTER | NO CONNECTION (LATERAL STRANDS COILED IN SPLICE CLOSURE) | |
| | Yellow 9 | 21 | COILED IN FIBER OPTIC INTERCONNECT CENTER | NO CONNECTION (LATERAL STRANDS COILED IN SPLICE CLOSURE) | |
| | Violet 10 | 22 | COILED IN FIBER OPTIC INTERCONNECT CENTER | NO CONNECTION (LATERAL STRANDS COILED IN SPLICE CLOSURE) | |
| | Rose 11 | 23 | COILED IN FIBER OPTIC INTERCONNECT CENTER | NO CONNECTION (LATERAL STRANDS COILED IN SPLICE CLOSURE) | |
| | Aqua 12 | 24 | COILED IN FIBER OPTIC INTERCONNECT CENTER | NO CONNECTION (LATERAL STRANDS COILED IN SPLICE CLOSURE) | |

MODEL: Default
FILE NAME: pw:\\jk-pw.bentley.com:jk-pw-01\Documents\01 Active Projects\HAVC-CHS-1689593100 - IL 64\Phase III\2 Design\CADD\Plan Sheets\Communications\West Corridor\108121-sht-comm-lateral-28_KHA.dgn

Kimley»Horn
© 2023 KIMLEY-HORN AND ASSOCIATES, INC.
4201 WINFIELD ROAD, SUITE 600
WARRENVILLE, IL 60555
PHONE: 630-487-5550
WWW.KIMLEY-HORN.COM

| | | |
|---|---|---|
| USER NAME = | DESIGNED - | REVISED - |
| | DRAWN - | REVISED - |
| PLOT SCALE = | CHECKED - | REVISED - |
| PLOT DATE = | DATE - | REVISED - |

**STATE OF ILLINOIS**
**DEPARTMENT OF TRANSPORTATION**

**FIBER OPTIC LATERAL CABLE SPLICE ASSIGNMENTS**
**LCF–NO–003h**

SCALE: | SHEET OF SHEETS | STA. TO STA.

| F.A.P. RTE. | SECTION | COUNTY | TOTAL SHEETS | SHEET NO. |
|---|---|---|---|---|
| 307 | 2020-263-SUR,SW&TS | DUPAGE | 529 | 468 |
| | | CONTRACT NO. 62N33 | | |
| | ILLINOIS | FED. AID PROJECT | | |

| LATERAL CABLE FIBER ASSIGNMENTS | | | | ORIGINATION | CAB-NO-014B |
|---|---|---|---|---|---|
| LATERAL CABLE DESIGNATION | | | LCF-NO-003i | DESTINATION | CMV-NO-014G |
| BUFFER TUBE | FIBER | FIBER NO. | CABINET CONNECTIONS | DISTRIBUTION CABLE CONNECTIONS | |
| BLUE | Blue 1 | 1 | PATCH PANEL "A" PORT 1 (JUMPERED TO LAYER II ETHERNET SWITCH) | DCF-NO-003 (WB), FIBER 27 | |
| | Orange 2 | 2 | PATCH PANEL "A" PORT 2 (JUMPERED TO LAYER II ETHERNET SWITCH) | DCF-NO-003 (WB), FIBER 28 | |
| | Green 3 | 3 | PATCH PANEL "A" PORT 3 | NO CONNECTION (LATERAL STRANDS COILED IN SPLICE CLOSURE) | |
| | Brown 4 | 4 | PATCH PANEL "A" PORT 4 | NO CONNECTION (LATERAL STRANDS COILED IN SPLICE CLOSURE) | |
| | Slate 5 | 5 | PATCH PANEL "A" PORT 5 | NO CONNECTION (LATERAL STRANDS COILED IN SPLICE CLOSURE) | |
| | White 6 | 6 | PATCH PANEL "A" PORT 6 | NO CONNECTION (LATERAL STRANDS COILED IN SPLICE CLOSURE) | |
| | Red 7 | 7 | PATCH PANEL "A" PORT 7 (JUMPERED TO LAYER II ETHERNET SWITCH) | DCF-NO-003 (EB), FIBER 27 | |
| | Black 8 | 8 | PATCH PANEL "A" PORT 8 (JUMPERED TO LAYER II ETHERNET SWITCH) | DCF-NO-003 (EB), FIBER 28 | |
| | Yellow 9 | 9 | PATCH PANEL "A" PORT 9 | NO CONNECTION (LATERAL STRANDS COILED IN SPLICE CLOSURE) | |
| | Violet 10 | 10 | PATCH PANEL "A" PORT 10 | NO CONNECTION (LATERAL STRANDS COILED IN SPLICE CLOSURE) | |
| | Rose 11 | 11 | PATCH PANEL "A" PORT 11 | NO CONNECTION (LATERAL STRANDS COILED IN SPLICE CLOSURE) | |
| | Aqua 12 | 12 | PATCH PANEL "A" PORT 12 | NO CONNECTION (LATERAL STRANDS COILED IN SPLICE CLOSURE) | |
| ORANGE | Blue 1 | 13 | COILED IN FIBER OPTIC INTERCONNECT CENTER | NO CONNECTION (LATERAL STRANDS COILED IN SPLICE CLOSURE) | |
| | Orange 2 | 14 | COILED IN FIBER OPTIC INTERCONNECT CENTER | NO CONNECTION (LATERAL STRANDS COILED IN SPLICE CLOSURE) | |
| | Green 3 | 15 | COILED IN FIBER OPTIC INTERCONNECT CENTER | NO CONNECTION (LATERAL STRANDS COILED IN SPLICE CLOSURE) | |
| | Brown 4 | 16 | COILED IN FIBER OPTIC INTERCONNECT CENTER | NO CONNECTION (LATERAL STRANDS COILED IN SPLICE CLOSURE) | |
| | Slate 5 | 17 | COILED IN FIBER OPTIC INTERCONNECT CENTER | NO CONNECTION (LATERAL STRANDS COILED IN SPLICE CLOSURE) | |
| | White 6 | 18 | COILED IN FIBER OPTIC INTERCONNECT CENTER | NO CONNECTION (LATERAL STRANDS COILED IN SPLICE CLOSURE) | |
| | Red 7 | 19 | COILED IN FIBER OPTIC INTERCONNECT CENTER | NO CONNECTION (LATERAL STRANDS COILED IN SPLICE CLOSURE) | |
| | Black 8 | 20 | COILED IN FIBER OPTIC INTERCONNECT CENTER | NO CONNECTION (LATERAL STRANDS COILED IN SPLICE CLOSURE) | |
| | Yellow 9 | 21 | COILED IN FIBER OPTIC INTERCONNECT CENTER | NO CONNECTION (LATERAL STRANDS COILED IN SPLICE CLOSURE) | |
| | Violet 10 | 22 | COILED IN FIBER OPTIC INTERCONNECT CENTER | NO CONNECTION (LATERAL STRANDS COILED IN SPLICE CLOSURE) | |
| | Rose 11 | 23 | COILED IN FIBER OPTIC INTERCONNECT CENTER | NO CONNECTION (LATERAL STRANDS COILED IN SPLICE CLOSURE) | |
| | Aqua 12 | 24 | COILED IN FIBER OPTIC INTERCONNECT CENTER | NO CONNECTION (LATERAL STRANDS COILED IN SPLICE CLOSURE) | |

MODEL: Default
FILE NAME: pw:\\jk-pw.bentley.com:jk-pw-01\Documents\01 Active Projects\HAVC-CHS-1689959100 - TI 64\Phase III\2 Design\CADD\Plan Sheets\Communications\West Corridor\108121-sht-comm-lateral-29_KHA.dgn

Kimley»Horn
© 2023 KIMLEY-HORN AND ASSOCIATES, INC.
4201 WINFIELD ROAD, SUITE 600
WARRENVILLE, IL 60555
PHONE: 630-487-5550
WWW.KIMLEY-HORN.COM

| | | |
|---|---|---|
| USER NAME = | DESIGNED - | REVISED - |
| | DRAWN - | REVISED - |
| PLOT SCALE = | CHECKED - | REVISED - |
| PLOT DATE = | DATE - | REVISED - |

**STATE OF ILLINOIS**
**DEPARTMENT OF TRANSPORTATION**

**FIBER OPTIC LATERAL CABLE SPLICE ASSIGNMENTS**
**LCF–NO–003i**

SCALE: | SHEET OF SHEETS | STA. TO STA.

| F.A.P. RTE. | SECTION | COUNTY | TOTAL SHEETS | SHEET NO. |
|---|---|---|---|---|
| 307 | 2020-263-SUR,SW&TS | DUPAGE | 529 | 469 |
| | | CONTRACT NO. 62N33 | | |
| | ILLINOIS | FED. AID PROJECT | | |

| LATERAL CABLE FIBER ASSIGNMENTS | | | | ORIGINATION | CAB-NO-014C |
|---|---|---|---|---|---|
| LATERAL CABLE DESIGNATION | | | LCF-NO-003j | DESTINATION | CMV-NO-014I |
| BUFFER TUBE | FIBER | FIBER NO. | CABINET CONNECTIONS | DISTRIBUTION CABLE CONNECTIONS | |
| BLUE | Blue 1 | 1 | PATCH PANEL "A" PORT 1 (JUMPERED TO LAYER II ETHERNET SWITCH) | DCF-NO-003 (WB), FIBER 39 | |
| | Orange 2 | 2 | PATCH PANEL "A" PORT 2 (JUMPERED TO LAYER II ETHERNET SWITCH) | DCF-NO-003 (WB), FIBER 40 | |
| | Green 3 | 3 | PATCH PANEL "A" PORT 3 | NO CONNECTION (LATERAL STRANDS COILED IN SPLICE CLOSURE) | |
| | Brown 4 | 4 | PATCH PANEL "A" PORT 4 | NO CONNECTION (LATERAL STRANDS COILED IN SPLICE CLOSURE) | |
| | Slate 5 | 5 | PATCH PANEL "A" PORT 5 | NO CONNECTION (LATERAL STRANDS COILED IN SPLICE CLOSURE) | |
| | White 6 | 6 | PATCH PANEL "A" PORT 6 | NO CONNECTION (LATERAL STRANDS COILED IN SPLICE CLOSURE) | |
| | Red 7 | 7 | PATCH PANEL "A" PORT 7 (JUMPERED TO LAYER II ETHERNET SWITCH) | DCF-NO-003 (EB), FIBER 39 | |
| | Black 8 | 8 | PATCH PANEL "A" PORT 8 (JUMPERED TO LAYER II ETHERNET SWITCH) | DCF-NO-003 (EB), FIBER 40 | |
| | Yellow 9 | 9 | PATCH PANEL "A" PORT 9 | NO CONNECTION (LATERAL STRANDS COILED IN SPLICE CLOSURE) | |
| | Violet 10 | 10 | PATCH PANEL "A" PORT 10 | NO CONNECTION (LATERAL STRANDS COILED IN SPLICE CLOSURE) | |
| | Rose 11 | 11 | PATCH PANEL "A" PORT 11 | NO CONNECTION (LATERAL STRANDS COILED IN SPLICE CLOSURE) | |
| | Aqua 12 | 12 | PATCH PANEL "A" PORT 12 | NO CONNECTION (LATERAL STRANDS COILED IN SPLICE CLOSURE) | |
| ORANGE | Blue 1 | 13 | COILED IN FIBER OPTIC INTERCONNECT CENTER | NO CONNECTION (LATERAL STRANDS COILED IN SPLICE CLOSURE) | |
| | Orange 2 | 14 | COILED IN FIBER OPTIC INTERCONNECT CENTER | NO CONNECTION (LATERAL STRANDS COILED IN SPLICE CLOSURE) | |
| | Green 3 | 15 | COILED IN FIBER OPTIC INTERCONNECT CENTER | NO CONNECTION (LATERAL STRANDS COILED IN SPLICE CLOSURE) | |
| | Brown 4 | 16 | COILED IN FIBER OPTIC INTERCONNECT CENTER | NO CONNECTION (LATERAL STRANDS COILED IN SPLICE CLOSURE) | |
| | Slate 5 | 17 | COILED IN FIBER OPTIC INTERCONNECT CENTER | NO CONNECTION (LATERAL STRANDS COILED IN SPLICE CLOSURE) | |
| | White 6 | 18 | COILED IN FIBER OPTIC INTERCONNECT CENTER | NO CONNECTION (LATERAL STRANDS COILED IN SPLICE CLOSURE) | |
| | Red 7 | 19 | COILED IN FIBER OPTIC INTERCONNECT CENTER | NO CONNECTION (LATERAL STRANDS COILED IN SPLICE CLOSURE) | |
| | Black 8 | 20 | COILED IN FIBER OPTIC INTERCONNECT CENTER | NO CONNECTION (LATERAL STRANDS COILED IN SPLICE CLOSURE) | |
| | Yellow 9 | 21 | COILED IN FIBER OPTIC INTERCONNECT CENTER | NO CONNECTION (LATERAL STRANDS COILED IN SPLICE CLOSURE) | |
| | Violet 10 | 22 | COILED IN FIBER OPTIC INTERCONNECT CENTER | NO CONNECTION (LATERAL STRANDS COILED IN SPLICE CLOSURE) | |
| | Rose 11 | 23 | COILED IN FIBER OPTIC INTERCONNECT CENTER | NO CONNECTION (LATERAL STRANDS COILED IN SPLICE CLOSURE) | |
| | Aqua 12 | 24 | COILED IN FIBER OPTIC INTERCONNECT CENTER | NO CONNECTION (LATERAL STRANDS COILED IN SPLICE CLOSURE) | |

MODEL: Default
FILE NAME: pw:\\jk-pw.bentley.com:jk-pw-01\Documents\01 Active Projects\HAVC-CHS-1689959100 - IL 64\Phase III\2 Design\CADD\Plan Sheets\Communications\West Corridor\108121-sht-comm-lateral-30_KHA.dgn

Kimley»Horn
© 2023 KIMLEY-HORN AND ASSOCIATES, INC.
4201 WINFIELD ROAD, SUITE 600
WARRENVILLE, IL 60555
PHONE: 630-487-5550
WWW.KIMLEY-HORN.COM

| | | |
|---|---|---|
| USER NAME = | DESIGNED - | REVISED - |
| | DRAWN - | REVISED - |
| PLOT SCALE = | CHECKED - | REVISED - |
| PLOT DATE = | DATE - | REVISED - |

**STATE OF ILLINOIS**
**DEPARTMENT OF TRANSPORTATION**

**FIBER OPTIC LATERAL CABLE SPLICE ASSIGNMENTS**
**LCF–NO–003j**

SCALE: | SHEET OF SHEETS | STA. TO STA.

| F.A.P. RTE. | SECTION | COUNTY | TOTAL SHEETS | SHEET NO. |
|---|---|---|---|---|
| 307 | 2020-263-SUR,SW&TS | DUPAGE | 529 | 470 |
| | | CONTRACT NO. 62N33 | | |
| | ILLINOIS | FED. AID PROJECT | | |

| LATERAL CABLE FIBER ASSIGNMENTS | | | | ORIGINATION | CAB-NO-015 |
|---|---|---|---|---|---|
| LATERAL CABLE DESIGNATION | | | LCF-NO-003k | DESTINATION | CMV-NO-015 |
| BUFFER TUBE | FIBER | FIBER NO. | CABINET CONNECTIONS | DISTRIBUTION CABLE CONNECTIONS | |
| BLUE | Blue 1 | 1 | PATCH PANEL "A" PORT 1 (JUMPERED TO LAYER II ETHERNET SWITCH) | DCF-NO-003 (WB), FIBER 29 | |
| | Orange 2 | 2 | PATCH PANEL "A" PORT 2 (JUMPERED TO LAYER II ETHERNET SWITCH) | DCF-NO-003 (WB), FIBER 30 | |
| | Green 3 | 3 | PATCH PANEL "A" PORT 3 | NO CONNECTION (LATERAL STRANDS COILED IN SPLICE CLOSURE) | |
| | Brown 4 | 4 | PATCH PANEL "A" PORT 4 | NO CONNECTION (LATERAL STRANDS COILED IN SPLICE CLOSURE) | |
| | Slate 5 | 5 | PATCH PANEL "A" PORT 5 | NO CONNECTION (LATERAL STRANDS COILED IN SPLICE CLOSURE) | |
| | White 6 | 6 | PATCH PANEL "A" PORT 6 | NO CONNECTION (LATERAL STRANDS COILED IN SPLICE CLOSURE) | |
| | Red 7 | 7 | PATCH PANEL "A" PORT 7 (JUMPERED TO LAYER II ETHERNET SWITCH) | DCF-NO-003 (EB), FIBER 29 | |
| | Black 8 | 8 | PATCH PANEL "A" PORT 8 (JUMPERED TO LAYER II ETHERNET SWITCH) | DCF-NO-003 (EB), FIBER 30 | |
| | Yellow 9 | 9 | PATCH PANEL "A" PORT 9 | NO CONNECTION (LATERAL STRANDS COILED IN SPLICE CLOSURE) | |
| | Violet 10 | 10 | PATCH PANEL "A" PORT 10 | NO CONNECTION (LATERAL STRANDS COILED IN SPLICE CLOSURE) | |
| | Rose 11 | 11 | PATCH PANEL "A" PORT 11 | NO CONNECTION (LATERAL STRANDS COILED IN SPLICE CLOSURE) | |
| | Aqua 12 | 12 | PATCH PANEL "A" PORT 12 | NO CONNECTION (LATERAL STRANDS COILED IN SPLICE CLOSURE) | |
| ORANGE | Blue 1 | 13 | COILED IN FIBER OPTIC INTERCONNECT CENTER | NO CONNECTION (LATERAL STRANDS COILED IN SPLICE CLOSURE) | |
| | Orange 2 | 14 | COILED IN FIBER OPTIC INTERCONNECT CENTER | NO CONNECTION (LATERAL STRANDS COILED IN SPLICE CLOSURE) | |
| | Green 3 | 15 | COILED IN FIBER OPTIC INTERCONNECT CENTER | NO CONNECTION (LATERAL STRANDS COILED IN SPLICE CLOSURE) | |
| | Brown 4 | 16 | COILED IN FIBER OPTIC INTERCONNECT CENTER | NO CONNECTION (LATERAL STRANDS COILED IN SPLICE CLOSURE) | |
| | Slate 5 | 17 | COILED IN FIBER OPTIC INTERCONNECT CENTER | NO CONNECTION (LATERAL STRANDS COILED IN SPLICE CLOSURE) | |
| | White 6 | 18 | COILED IN FIBER OPTIC INTERCONNECT CENTER | NO CONNECTION (LATERAL STRANDS COILED IN SPLICE CLOSURE) | |
| | Red 7 | 19 | COILED IN FIBER OPTIC INTERCONNECT CENTER | NO CONNECTION (LATERAL STRANDS COILED IN SPLICE CLOSURE) | |
| | Black 8 | 20 | COILED IN FIBER OPTIC INTERCONNECT CENTER | NO CONNECTION (LATERAL STRANDS COILED IN SPLICE CLOSURE) | |
| | Yellow 9 | 21 | COILED IN FIBER OPTIC INTERCONNECT CENTER | NO CONNECTION (LATERAL STRANDS COILED IN SPLICE CLOSURE) | |
| | Violet 10 | 22 | COILED IN FIBER OPTIC INTERCONNECT CENTER | NO CONNECTION (LATERAL STRANDS COILED IN SPLICE CLOSURE) | |
| | Rose 11 | 23 | COILED IN FIBER OPTIC INTERCONNECT CENTER | NO CONNECTION (LATERAL STRANDS COILED IN SPLICE CLOSURE) | |
| | Aqua 12 | 24 | COILED IN FIBER OPTIC INTERCONNECT CENTER | NO CONNECTION (LATERAL STRANDS COILED IN SPLICE CLOSURE) | |

MODEL: Default
FILE NAME: pw:\\jk-pw.bentley.com:jk-pw-01\Documents\01 Active Projects\HAVC-CHS-1689593100 - IL 64\Phase III\2 Design\CADD\Plan Sheets\Communications\West Corridor\108121-sht-comm-lateral-31_KHA.dgn

Kimley»Horn
© 2023 KIMLEY-HORN AND ASSOCIATES, INC.
4201 WINFIELD ROAD, SUITE 600
WARRENVILLE, IL 60555
PHONE: 630-487-5550
WWW.KIMLEY-HORN.COM

| | | |
|---|---|---|
| USER NAME = | DESIGNED - | REVISED - |
| | DRAWN - | REVISED - |
| PLOT SCALE = | CHECKED - | REVISED - |
| PLOT DATE = | DATE - | REVISED - |

**STATE OF ILLINOIS**
**DEPARTMENT OF TRANSPORTATION**

**FIBER OPTIC LATERAL CABLE SPLICE ASSIGNMENTS**
**LCF–NO–003k**

SCALE: | SHEET OF SHEETS | STA. TO STA.

| F.A.P. RTE. | SECTION | COUNTY | TOTAL SHEETS | SHEET NO. |
|---|---|---|---|---|
| 307 | 2020-263-SUR,SW&TS | DUPAGE | 529 | 471 |
| | | CONTRACT NO. 62N33 | | |
| | ILLINOIS | FED. AID PROJECT | | |

| LATERAL CABLE FIBER ASSIGNMENTS | | | | ORIGINATION | CAB-NO-015A |
|---|---|---|---|---|---|
| LATERAL CABLE DESIGNATION | | | LCF-NO-003I | DESTINATION | CMV-NO-015C |
| BUFFER TUBE | FIBER | FIBER NO. | CABINET CONNECTIONS | DISTRIBUTION CABLE CONNECTIONS | |
| BLUE | Blue 1 | 1 | PATCH PANEL "A" PORT 1 (JUMPERED TO LAYER II ETHERNET SWITCH) | DCF-NO-003 (WB), FIBER 31 | |
| | Orange 2 | 2 | PATCH PANEL "A" PORT 2 (JUMPERED TO LAYER II ETHERNET SWITCH) | DCF-NO-003 (WB), FIBER 32 | |
| | Green 3 | 3 | PATCH PANEL "A" PORT 3 | NO CONNECTION (LATERAL STRANDS COILED IN SPLICE CLOSURE) | |
| | Brown 4 | 4 | PATCH PANEL "A" PORT 4 | NO CONNECTION (LATERAL STRANDS COILED IN SPLICE CLOSURE) | |
| | Slate 5 | 5 | PATCH PANEL "A" PORT 5 | NO CONNECTION (LATERAL STRANDS COILED IN SPLICE CLOSURE) | |
| | White 6 | 6 | PATCH PANEL "A" PORT 6 | NO CONNECTION (LATERAL STRANDS COILED IN SPLICE CLOSURE) | |
| | Red 7 | 7 | PATCH PANEL "A" PORT 7 (JUMPERED TO LAYER II ETHERNET SWITCH) | DCF-NO-003 (EB), FIBER 31 | |
| | Black 8 | 8 | PATCH PANEL "A" PORT 8 (JUMPERED TO LAYER II ETHERNET SWITCH) | DCF-NO-003 (EB), FIBER 32 | |
| | Yellow 9 | 9 | PATCH PANEL "A" PORT 9 | NO CONNECTION (LATERAL STRANDS COILED IN SPLICE CLOSURE) | |
| | Violet 10 | 10 | PATCH PANEL "A" PORT 10 | NO CONNECTION (LATERAL STRANDS COILED IN SPLICE CLOSURE) | |
| | Rose 11 | 11 | PATCH PANEL "A" PORT 11 | NO CONNECTION (LATERAL STRANDS COILED IN SPLICE CLOSURE) | |
| | Aqua 12 | 12 | PATCH PANEL "A" PORT 12 | NO CONNECTION (LATERAL STRANDS COILED IN SPLICE CLOSURE) | |
| ORANGE | Blue 1 | 13 | COILED IN FIBER OPTIC INTERCONNECT CENTER | NO CONNECTION (LATERAL STRANDS COILED IN SPLICE CLOSURE) | |
| | Orange 2 | 14 | COILED IN FIBER OPTIC INTERCONNECT CENTER | NO CONNECTION (LATERAL STRANDS COILED IN SPLICE CLOSURE) | |
| | Green 3 | 15 | COILED IN FIBER OPTIC INTERCONNECT CENTER | NO CONNECTION (LATERAL STRANDS COILED IN SPLICE CLOSURE) | |
| | Brown 4 | 16 | COILED IN FIBER OPTIC INTERCONNECT CENTER | NO CONNECTION (LATERAL STRANDS COILED IN SPLICE CLOSURE) | |
| | Slate 5 | 17 | COILED IN FIBER OPTIC INTERCONNECT CENTER | NO CONNECTION (LATERAL STRANDS COILED IN SPLICE CLOSURE) | |
| | White 6 | 18 | COILED IN FIBER OPTIC INTERCONNECT CENTER | NO CONNECTION (LATERAL STRANDS COILED IN SPLICE CLOSURE) | |
| | Red 7 | 19 | COILED IN FIBER OPTIC INTERCONNECT CENTER | NO CONNECTION (LATERAL STRANDS COILED IN SPLICE CLOSURE) | |
| | Black 8 | 20 | COILED IN FIBER OPTIC INTERCONNECT CENTER | NO CONNECTION (LATERAL STRANDS COILED IN SPLICE CLOSURE) | |
| | Yellow 9 | 21 | COILED IN FIBER OPTIC INTERCONNECT CENTER | NO CONNECTION (LATERAL STRANDS COILED IN SPLICE CLOSURE) | |
| | Violet 10 | 22 | COILED IN FIBER OPTIC INTERCONNECT CENTER | NO CONNECTION (LATERAL STRANDS COILED IN SPLICE CLOSURE) | |
| | Rose 11 | 23 | COILED IN FIBER OPTIC INTERCONNECT CENTER | NO CONNECTION (LATERAL STRANDS COILED IN SPLICE CLOSURE) | |
| | Aqua 12 | 24 | COILED IN FIBER OPTIC INTERCONNECT CENTER | NO CONNECTION (LATERAL STRANDS COILED IN SPLICE CLOSURE) | |

MODEL: Default
FILE NAME: pw:\\jk-pw.bentley.com:jk-pw-01\Documents\01 Active Projects\HAVC-CHS-1689593100 - IL 64\Phase III\2 Design\CADD\Plan Sheets\Communications\West Corridor\108121-sht-comm-lateral-32_KHA.dgn

Kimley»Horn
© 2023 KIMLEY-HORN AND ASSOCIATES, INC.
4201 WINFIELD ROAD, SUITE 600
WARRENVILLE, IL 60555
PHONE: 630-487-5550
WWW.KIMLEY-HORN.COM

| | | |
|---|---|---|
| USER NAME = | DESIGNED - | REVISED - |
| | DRAWN - | REVISED - |
| PLOT SCALE = | CHECKED - | REVISED - |
| PLOT DATE = | DATE - | REVISED - |

**STATE OF ILLINOIS**
**DEPARTMENT OF TRANSPORTATION**

**FIBER OPTIC LATERAL CABLE SPLICE ASSIGNMENTS**
**LCF–NO–003I**

SCALE: | SHEET OF SHEETS | STA. TO STA.

| F.A.P. RTE. | SECTION | COUNTY | TOTAL SHEETS | SHEET NO. |
|---|---|---|---|---|
| 307 | 2020-263-SUR,SW&TS | DUPAGE | 529 | 472 |
| | | CONTRACT NO. 62N33 | | |
| | ILLINOIS | FED. AID PROJECT | | |

| LATERAL CABLE FIBER ASSIGNMENTS | | | | ORIGINATION | CAB-NO-015B |
|---|---|---|---|---|---|
| LATERAL CABLE DESIGNATION | | | LCF-NO-003m | DESTINATION | CMV-NO-015E |
| BUFFER TUBE | FIBER | FIBER NO. | CABINET CONNECTIONS | DISTRIBUTION CABLE CONNECTIONS | |
| BLUE | Blue 1 | 1 | PATCH PANEL "A" PORT 1 (JUMPERED TO LAYERi II ETHERNET SWITCH) | DCF-NO-003 (WB), FIBER 31 | |
| | Orange 2 | 2 | PATCH PANEL "A" PORT 2 (JUMPERED TO LAYER IiI ETHERNET SWITCH) | DCF-NO-003 (WB), FIBER 32 | |
| | Green 3 | 3 | PATCH PANEL "A" PORT 3 | NO CONNECTION (LATERAL STRANDS COILED IN SPLICE CLOSURE) | |
| | Brown 4 | 4 | PATCH PANEL "A" PORT 4 | NO CONNECTION (LATERAL STRANDS COILED IN SPLICE CLOSURE) | |
| | Slate 5 | 5 | PATCH PANEL "A" PORT 5 | NO CONNECTION (LATERAL STRANDS COILED IN SPLICE CLOSURE) | |
| | White 6 | 6 | PATCH PANEL "A" PORT 6 | NO CONNECTION (LATERAL STRANDS COILED IN SPLICE CLOSURE) | |
| | Red 7 | 7 | PATCH PANEL "A" PORT 7 (JUMPERED TO LAYER IIi ETHERNET SWITCH) | DCF-NO-003 (EB), FIBER 31 | |
| | Black 8 | 8 | PATCH PANEL "A" PORT 8 (JUMPERED TO LAYER IIi ETHERNET SWITCH) | DCF-NO-003 (EB), FIBER 32 | |
| | Yellow 9 | 9 | PATCH PANEL "A" PORT 9 | NO CONNECTION (LATERAL STRANDS COILED IN SPLICE CLOSURE) | |
| | Violet 10 | 10 | PATCH PANEL "A" PORT 10 | NO CONNECTION (LATERAL STRANDS COILED IN SPLICE CLOSURE) | |
| | Rose 11 | 11 | PATCH PANEL "A" PORT 11 (JUMPERED TO LAYER III ETHERNET SWITCH) | DCF-NO-003 (WB), FIBER 55 | |
| | Aqua 12 | 12 | PATCH PANEL "A" PORT 12 (JUMPERED TO LAYER III ETHERNET SWITCH) | DCF-NO-003 (EB), FIBER 55 | |
| ORANGE | Blue 1 | 13 | COILED IN FIBER OPTIC INTERCONNECT CENTER | NO CONNECTION (LATERAL STRANDS COILED IN SPLICE CLOSURE) | |
| | Orange 2 | 14 | COILED IN FIBER OPTIC INTERCONNECT CENTER | NO CONNECTION (LATERAL STRANDS COILED IN SPLICE CLOSURE) | |
| | Green 3 | 15 | COILED IN FIBER OPTIC INTERCONNECT CENTER | NO CONNECTION (LATERAL STRANDS COILED IN SPLICE CLOSURE) | |
| | Brown 4 | 16 | COILED IN FIBER OPTIC INTERCONNECT CENTER | NO CONNECTION (LATERAL STRANDS COILED IN SPLICE CLOSURE) | |
| | Slate 5 | 17 | COILED IN FIBER OPTIC INTERCONNECT CENTER | NO CONNECTION (LATERAL STRANDS COILED IN SPLICE CLOSURE) | |
| | White 6 | 18 | COILED IN FIBER OPTIC INTERCONNECT CENTER | NO CONNECTION (LATERAL STRANDS COILED IN SPLICE CLOSURE) | |
| | Red 7 | 19 | COILED IN FIBER OPTIC INTERCONNECT CENTER | NO CONNECTION (LATERAL STRANDS COILED IN SPLICE CLOSURE) | |
| | Black 8 | 20 | COILED IN FIBER OPTIC INTERCONNECT CENTER | NO CONNECTION (LATERAL STRANDS COILED IN SPLICE CLOSURE) | |
| | Yellow 9 | 21 | COILED IN FIBER OPTIC INTERCONNECT CENTER | NO CONNECTION (LATERAL STRANDS COILED IN SPLICE CLOSURE) | |
| | Violet 10 | 22 | COILED IN FIBER OPTIC INTERCONNECT CENTER | NO CONNECTION (LATERAL STRANDS COILED IN SPLICE CLOSURE) | |
| | Rose 11 | 23 | COILED IN FIBER OPTIC INTERCONNECT CENTER | NO CONNECTION (LATERAL STRANDS COILED IN SPLICE CLOSURE) | |
| | Aqua 12 | 24 | COILED IN FIBER OPTIC INTERCONNECT CENTER | NO CONNECTION (LATERAL STRANDS COILED IN SPLICE CLOSURE) | |

MODEL: Default
FILE NAME: pw:\\jk-pw.bentley.com:jk-pw-01\Documents\01 Active Projects\HWY-CHS-1689593100 - IL 64\Phase III\2 Design\CADD\Plan Sheets\Communications\West Corridor\108121-sht-comm-lateral-33_KHA.dgn

Kimley»Horn
© 2023 KIMLEY-HORN AND ASSOCIATES, INC.
4201 WINFIELD ROAD, SUITE 600
WARRENVILLE, IL 60555
PHONE: 630-487-5550
WWW.KIMLEY-HORN.COM

| | | |
|---|---|---|
| USER NAME = | DESIGNED - | REVISED - |
| | DRAWN - | REVISED - |
| PLOT SCALE = | CHECKED - | REVISED - |
| PLOT DATE = | DATE - | REVISED - |

**STATE OF ILLINOIS**
**DEPARTMENT OF TRANSPORTATION**

**FIBER OPTIC LATERAL CABLE SPLICE ASSIGNMENTS**
**LCF–NO–003m**

SCALE: | SHEET OF SHEETS | STA. TO STA.

| F.A.P. RTE. | SECTION | COUNTY | TOTAL SHEETS | SHEET NO. |
|---|---|---|---|---|
| 307 | 2020-263-SUR,SW&TS | DUPAGE | 529 | 473 |
| | | CONTRACT NO. 62N33 | | |
| | ILLINOIS | FED. AID PROJECT | | |

| LATERAL CABLE FIBER ASSIGNMENTS | | | | ORIGINATION | CAB-NO-015C |
|---|---|---|---|---|---|
| LATERAL CABLE DESIGNATION | | | LCF-NO-003n | DESTINATION | CMV-NO-015H |
| BUFFER TUBE | FIBER | FIBER NO. | CABINET CONNECTIONS | DISTRIBUTION CABLE CONNECTIONS | |
| BLUE | Blue 1 | 1 | PATCH PANEL "A" PORT 1 (JUMPERED TO LAYER II ETHERNET SWITCH) | DCF-NO-003 (WB), FIBER 35 | |
| | Orange 2 | 2 | PATCH PANEL "A" PORT 2 (JUMPERED TO LAYER II ETHERNET SWITCH) | DCF-NO-003 (WB), FIBER 36 | |
| | Green 3 | 3 | PATCH PANEL "A" PORT 3 | NO CONNECTION (LATERAL STRANDS COILED IN SPLICE CLOSURE) | |
| | Brown 4 | 4 | PATCH PANEL "A" PORT 4 | NO CONNECTION (LATERAL STRANDS COILED IN SPLICE CLOSURE) | |
| | Slate 5 | 5 | PATCH PANEL "A" PORT 5 | NO CONNECTION (LATERAL STRANDS COILED IN SPLICE CLOSURE) | |
| | White 6 | 6 | PATCH PANEL "A" PORT 6 | NO CONNECTION (LATERAL STRANDS COILED IN SPLICE CLOSURE) | |
| | Red 7 | 7 | PATCH PANEL "A" PORT 7 (JUMPERED TO LAYER II ETHERNET SWITCH) | DCF-NO-003 (EB), FIBER 35 | |
| | Black 8 | 8 | PATCH PANEL "A" PORT 8 (JUMPERED TO LAYER II ETHERNET SWITCH) | DCF-NO-003 (EB), FIBER 36 | |
| | Yellow 9 | 9 | PATCH PANEL "A" PORT 9 | NO CONNECTION (LATERAL STRANDS COILED IN SPLICE CLOSURE) | |
| | Violet 10 | 10 | PATCH PANEL "A" PORT 10 | NO CONNECTION (LATERAL STRANDS COILED IN SPLICE CLOSURE) | |
| | Rose 11 | 11 | PATCH PANEL "A" PORT 11 | NO CONNECTION (LATERAL STRANDS COILED IN SPLICE CLOSURE) | |
| | Aqua 12 | 12 | PATCH PANEL "A" PORT 12 | NO CONNECTION (LATERAL STRANDS COILED IN SPLICE CLOSURE) | |
| ORANGE | Blue 1 | 13 | COILED IN FIBER OPTIC INTERCONNECT CENTER | NO CONNECTION (LATERAL STRANDS COILED IN SPLICE CLOSURE) | |
| | Orange 2 | 14 | COILED IN FIBER OPTIC INTERCONNECT CENTER | NO CONNECTION (LATERAL STRANDS COILED IN SPLICE CLOSURE) | |
| | Green 3 | 15 | COILED IN FIBER OPTIC INTERCONNECT CENTER | NO CONNECTION (LATERAL STRANDS COILED IN SPLICE CLOSURE) | |
| | Brown 4 | 16 | COILED IN FIBER OPTIC INTERCONNECT CENTER | NO CONNECTION (LATERAL STRANDS COILED IN SPLICE CLOSURE) | |
| | Slate 5 | 17 | COILED IN FIBER OPTIC INTERCONNECT CENTER | NO CONNECTION (LATERAL STRANDS COILED IN SPLICE CLOSURE) | |
| | White 6 | 18 | COILED IN FIBER OPTIC INTERCONNECT CENTER | NO CONNECTION (LATERAL STRANDS COILED IN SPLICE CLOSURE) | |
| | Red 7 | 19 | COILED IN FIBER OPTIC INTERCONNECT CENTER | NO CONNECTION (LATERAL STRANDS COILED IN SPLICE CLOSURE) | |
| | Black 8 | 20 | COILED IN FIBER OPTIC INTERCONNECT CENTER | NO CONNECTION (LATERAL STRANDS COILED IN SPLICE CLOSURE) | |
| | Yellow 9 | 21 | COILED IN FIBER OPTIC INTERCONNECT CENTER | NO CONNECTION (LATERAL STRANDS COILED IN SPLICE CLOSURE) | |
| | Violet 10 | 22 | COILED IN FIBER OPTIC INTERCONNECT CENTER | NO CONNECTION (LATERAL STRANDS COILED IN SPLICE CLOSURE) | |
| | Rose 11 | 23 | COILED IN FIBER OPTIC INTERCONNECT CENTER | NO CONNECTION (LATERAL STRANDS COILED IN SPLICE CLOSURE) | |
| | Aqua 12 | 24 | COILED IN FIBER OPTIC INTERCONNECT CENTER | NO CONNECTION (LATERAL STRANDS COILED IN SPLICE CLOSURE) | |

MODEL: Default
FILE NAME: pw:\\jk-pw.bentley.com:jk-pw-01\Documents\01 Active Projects\HAWK-CHS-1689593100 - IL 64\Phase III\2 Design\CADD\Plan Sheets\Communications\West Corridor\108121-sht-comm-lateral-34_KHA.dgn

Kimley»Horn
© 2023 KIMLEY-HORN AND ASSOCIATES, INC.
4201 WINFIELD ROAD, SUITE 600
WARRENVILLE, IL 60555
PHONE: 630-487-5550
WWW.KIMLEY-HORN.COM

| | | |
|---|---|---|
| USER NAME = | DESIGNED - | REVISED - |
| | DRAWN - | REVISED - |
| PLOT SCALE = | CHECKED - | REVISED - |
| PLOT DATE = | DATE - | REVISED - |

**STATE OF ILLINOIS**
**DEPARTMENT OF TRANSPORTATION**

**FIBER OPTIC LATERAL CABLE SPLICE ASSIGNMENTS**
**LCF–NO–003n**

SCALE: | SHEET OF SHEETS | STA. TO STA.

| F.A.P. RTE. | SECTION | COUNTY | TOTAL SHEETS | SHEET NO. |
|---|---|---|---|---|
| 307 | 2020-263-SUR,SW&TS | DUPAGE | 529 | 474 |
| | | CONTRACT NO. 62N33 | | |
| | ILLINOIS | FED. AID PROJECT | | |

| LATERAL CABLE FIBER ASSIGNMENTS | | | | ORIGINATION | CAB-NO-016 |
|---|---|---|---|---|---|
| LATERAL CABLE DESIGNATION | | | LCF-NO-003o | DESTINATION | CMV-NO-016A |
| BUFFER TUBE | FIBER | FIBER NO. | CABINET CONNECTIONS | DISTRIBUTION CABLE CONNECTIONS | |
| BLUE | Blue 1 | 1 | PATCH PANEL "A" PORT 1 (JUMPERED TO LAYER II ETHERNET SWITCH) | DCF-NO-003 (WB), FIBER 33 | |
| | Orange 2 | 2 | PATCH PANEL "A" PORT 2 (JUMPERED TO LAYER II ETHERNET SWITCH) | DCF-NO-003 (WB), FIBER 34 | |
| | Green 3 | 3 | PATCH PANEL "A" PORT 3 | NO CONNECTION (LATERAL STRANDS COILED IN SPLICE CLOSURE) | |
| | Brown 4 | 4 | PATCH PANEL "A" PORT 4 | NO CONNECTION (LATERAL STRANDS COILED IN SPLICE CLOSURE) | |
| | Slate 5 | 5 | PATCH PANEL "A" PORT 5 | NO CONNECTION (LATERAL STRANDS COILED IN SPLICE CLOSURE) | |
| | White 6 | 6 | PATCH PANEL "A" PORT 6 | NO CONNECTION (LATERAL STRANDS COILED IN SPLICE CLOSURE) | |
| | Red 7 | 7 | PATCH PANEL "A" PORT 7 (JUMPERED TO LAYER II ETHERNET SWITCH) | DCF-NO-003 (EB), FIBER 33 | |
| | Black 8 | 8 | PATCH PANEL "A" PORT 8 (JUMPERED TO LAYER II ETHERNET SWITCH) | DCF-NO-003 (EB), FIBER 34 | |
| | Yellow 9 | 9 | PATCH PANEL "A" PORT 9 | NO CONNECTION (LATERAL STRANDS COILED IN SPLICE CLOSURE) | |
| | Violet 10 | 10 | PATCH PANEL "A" PORT 10 | NO CONNECTION (LATERAL STRANDS COILED IN SPLICE CLOSURE) | |
| | Rose 11 | 11 | PATCH PANEL "A" PORT 11 | NO CONNECTION (LATERAL STRANDS COILED IN SPLICE CLOSURE) | |
| | Aqua 12 | 12 | PATCH PANEL "A" PORT 12 | NO CONNECTION (LATERAL STRANDS COILED IN SPLICE CLOSURE) | |
| ORANGE | Blue 1 | 13 | COILED IN FIBER OPTIC INTERCONNECT CENTER | NO CONNECTION (LATERAL STRANDS COILED IN SPLICE CLOSURE) | |
| | Orange 2 | 14 | COILED IN FIBER OPTIC INTERCONNECT CENTER | NO CONNECTION (LATERAL STRANDS COILED IN SPLICE CLOSURE) | |
| | Green 3 | 15 | COILED IN FIBER OPTIC INTERCONNECT CENTER | NO CONNECTION (LATERAL STRANDS COILED IN SPLICE CLOSURE) | |
| | Brown 4 | 16 | COILED IN FIBER OPTIC INTERCONNECT CENTER | NO CONNECTION (LATERAL STRANDS COILED IN SPLICE CLOSURE) | |
| | Slate 5 | 17 | COILED IN FIBER OPTIC INTERCONNECT CENTER | NO CONNECTION (LATERAL STRANDS COILED IN SPLICE CLOSURE) | |
| | White 6 | 18 | COILED IN FIBER OPTIC INTERCONNECT CENTER | NO CONNECTION (LATERAL STRANDS COILED IN SPLICE CLOSURE) | |
| | Red 7 | 19 | COILED IN FIBER OPTIC INTERCONNECT CENTER | NO CONNECTION (LATERAL STRANDS COILED IN SPLICE CLOSURE) | |
| | Black 8 | 20 | COILED IN FIBER OPTIC INTERCONNECT CENTER | NO CONNECTION (LATERAL STRANDS COILED IN SPLICE CLOSURE) | |
| | Yellow 9 | 21 | COILED IN FIBER OPTIC INTERCONNECT CENTER | NO CONNECTION (LATERAL STRANDS COILED IN SPLICE CLOSURE) | |
| | Violet 10 | 22 | COILED IN FIBER OPTIC INTERCONNECT CENTER | NO CONNECTION (LATERAL STRANDS COILED IN SPLICE CLOSURE) | |
| | Rose 11 | 23 | COILED IN FIBER OPTIC INTERCONNECT CENTER | NO CONNECTION (LATERAL STRANDS COILED IN SPLICE CLOSURE) | |
| | Aqua 12 | 24 | COILED IN FIBER OPTIC INTERCONNECT CENTER | NO CONNECTION (LATERAL STRANDS COILED IN SPLICE CLOSURE) | |

MODEL: Default
FILE NAME: pw:\\jk-pw.bentley.com:jk-pw-01\Documents\01 Active Projects\HAWK-CHS-1689593100 - IL 64\Phase III\2 Design\CADD\Plan Sheets\Communications\West Corridor\108121-sht-comm-lateral-35_KHA.dgn

Kimley»Horn
© 2023 KIMLEY-HORN AND ASSOCIATES, INC.
4201 WINFIELD ROAD, SUITE 600
WARRENVILLE, IL 60555
PHONE: 630-487-5550
WWW.KIMLEY-HORN.COM

| | | |
|---|---|---|
| USER NAME = | DESIGNED - | REVISED - |
| | DRAWN - | REVISED - |
| PLOT SCALE = | CHECKED - | REVISED - |
| PLOT DATE = | DATE - | REVISED - |

**STATE OF ILLINOIS**
**DEPARTMENT OF TRANSPORTATION**

**FIBER OPTIC LATERAL CABLE SPLICE ASSIGNMENTS**
**LCF–NO–003o**

SCALE: | SHEET OF SHEETS | STA. TO STA.

| F.A.P. RTE. | SECTION | COUNTY | TOTAL SHEETS | SHEET NO. |
|---|---|---|---|---|
| 307 | 2020-263-SUR,SW&TS | DUPAGE | 529 | 475 |
| | | CONTRACT NO. 62N33 | | |
| | ILLINOIS | FED. AID PROJECT | | |

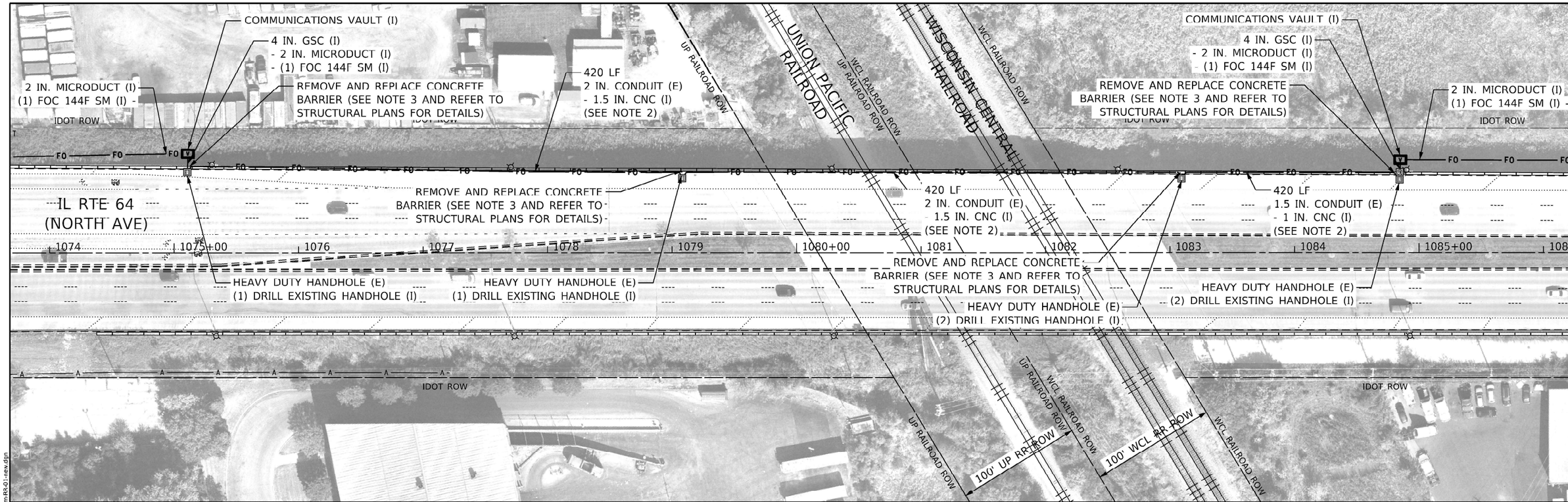


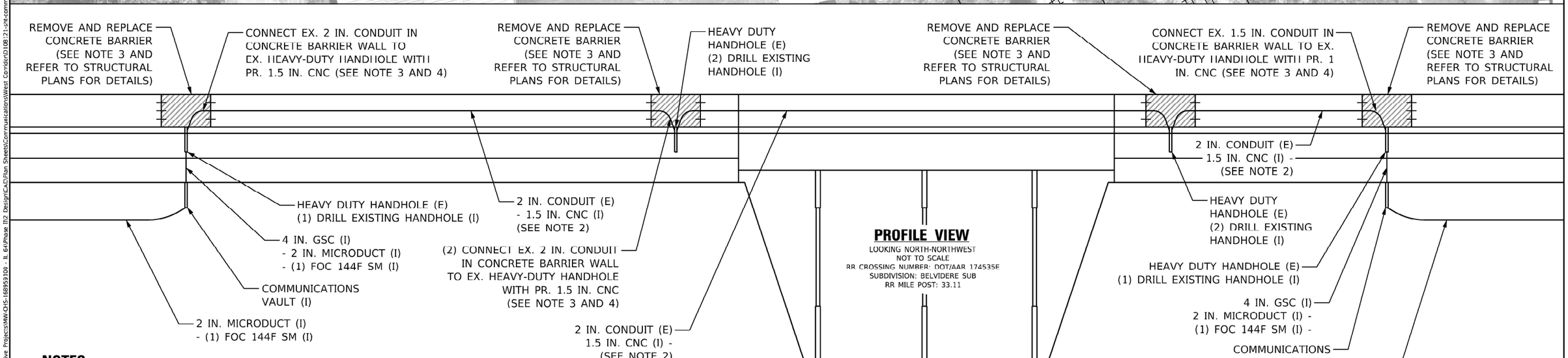


**PROFILE VIEW**
LOOKING NORTH-NORTHWEST
NOT TO SCALE
RR CROSSING NUMBER: DOT/AAR 174535E
SUBDIVISION: BELVIDERE SUB
RR MILE POST: 33.11

## NOTES:

1) ALL QUANTITIES SHOWN ON THIS SHEET ARE ACCOUNTED FOR ON THE ITS CONSTRUCTION PLANS.

2) CONTRACTOR TO REMOVE EX. TRANSIT SIGNAL PRIORITY CABLE IN CONDIUT LOCATED INSIDE EX. CONCRETE BARRIER WALL. CONTRACTOR TO WATER JET EX. CONDUIT TO CLEAN AND THEN INSTALL NEW CNC CONDUIT INSIDE EX. CONDUIT, REINSTALL EX. TRANSIT SIGNAL PRIORITY CABLE, AND THEN INSTALL PROPOSED MICROFIBER.

3) CONTRACTOR TO REMOVE SECTION OF EX. CONCRETE BARRIER WALL TO EXPOSE EX. CONDUIT INSIDE BARRIER WALL. CONTRACTOR TO CONNECT EX. CONDUIT TO EX. HEAVY-DUTY HANDHOLE USING CNC CONDUIT SIZE SHOWN ON PLANS.

4) PROPOSED CNC CONDUIT USED TO CONNECT EXISTING CONDUIT IN CONCRETE BARRIER WALL TO EXISTING HEAVY DUTY HANDHOLE SHALL HAVE A MINIMUM BEND RADIUS OF 24" OR AS SPECIFIED BY THE FIBER MANUFACTURER, WHICHEVER IS GREATER.

MODEL: Default
FILE NAME: pw:\\kh-pw.kimley.com:kh-pw-01\Documents\01 Active Projects\MW-OHS-168993100 - IL 64\Phase II\2 Design\CAD\Plan Sheets\Communications\West Corridor\D108121-sht-comm-RR-01-new.dgn

Kimley»Horn
© 2020 KIMLEY-HORN AND ASSOCIATES, INC.
4994 WINFIELD ROAD, SUITE 200
WARRENVILLE, IL 60555
PHONE: 630-487-5550
WWW.KIMLEY-HORN.COM

| | | | |
|---|---|---|---|
| USER NAME = | DESIGNED - | REVISED - | |
| | DRAWN - | REVISED - | |
| PLOT SCALE = | CHECKED - | REVISED - | |
| PLOT DATE = | DATE - | REVISED - | |

**STATE OF ILLINOIS**
**DEPARTMENT OF TRANSPORTATION**

**RAILROAD CROSSING DETAIL**
**IL 64 (NORTH AVE) OVER WISCONSIN CENTRAL RAILROAD**

SCALE: 1" = 40' | SHEET OF SHEETS | STA. TO STA.

| F.A.P. RTE. | SECTION | COUNTY | TOTAL SHEETS | SHEET NO. |
|---|---|---|---|---|
| 307 | 2020-263-SUR.SW&TS | DUPAGE | 529 | 476 |
| | | CONTRACT NO. 62N33 | | |
| | ILLINOIS | FED. AID PROJECT | | |

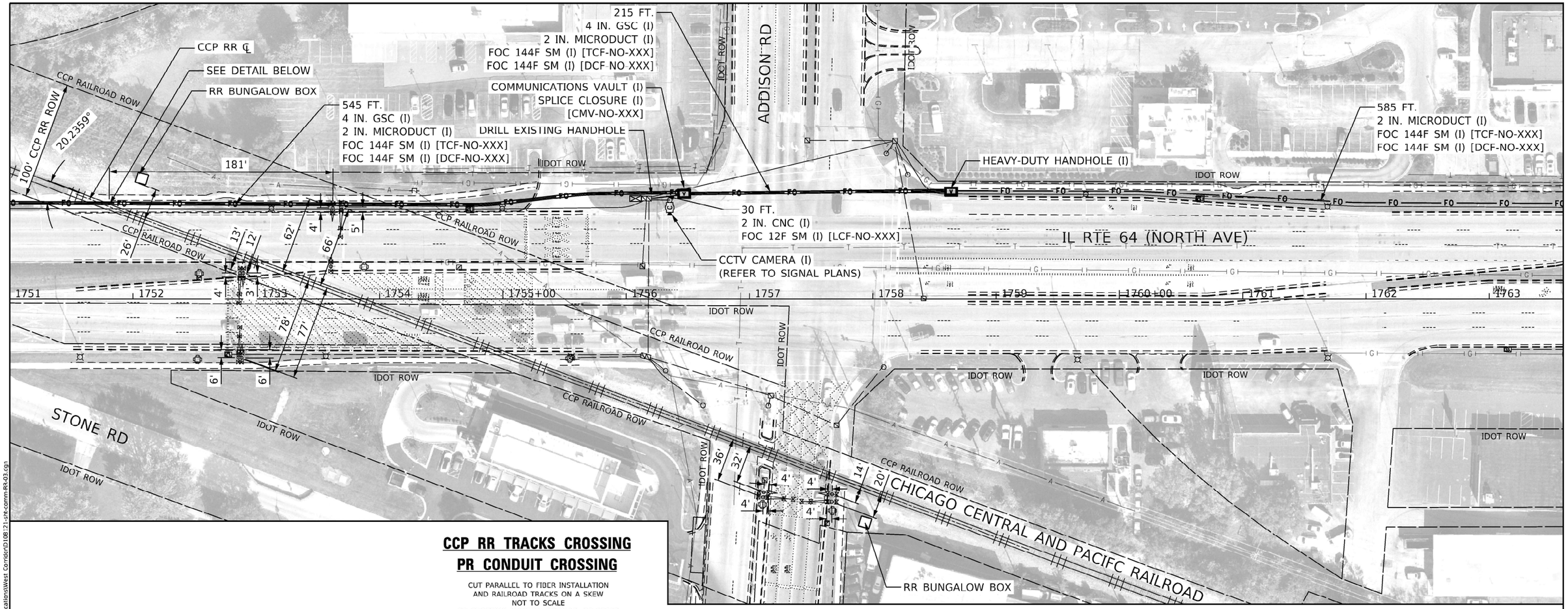


## CCP RR TRACKS CROSSING
## PR CONDUIT CROSSING

CUT PARALLEL TO FIBER INSTALLATION
AND RAILROAD TRACKS ON A SKEW
NOT TO SCALE
RR CROSSING NUMBER: DOT/AAR 28 9861D
SUBDIVISION: FREEPORT SUB
RR MILE POST: 22.40

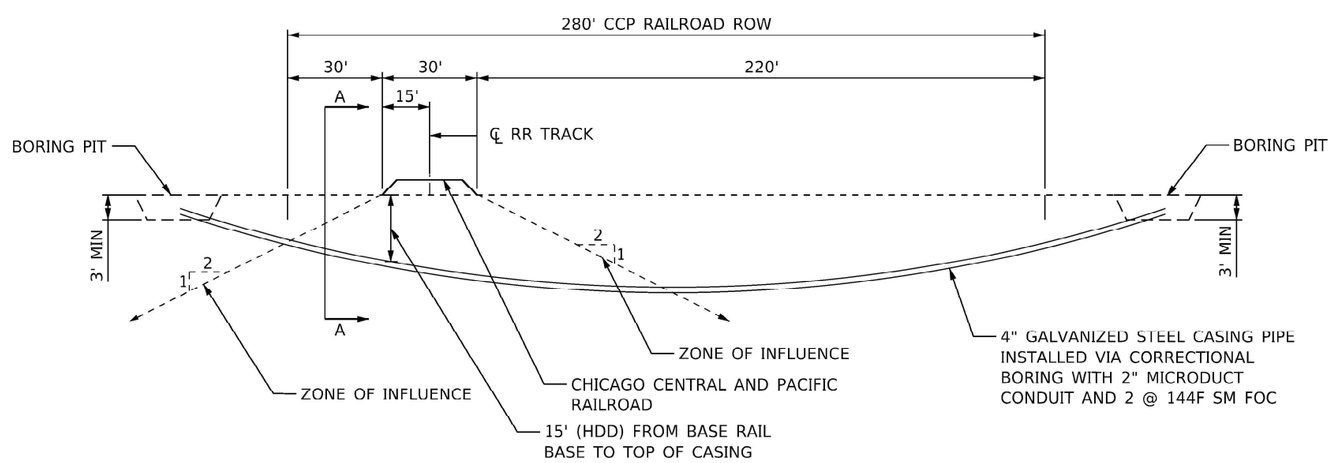


## SECTION A–A

NOT TO SCALE

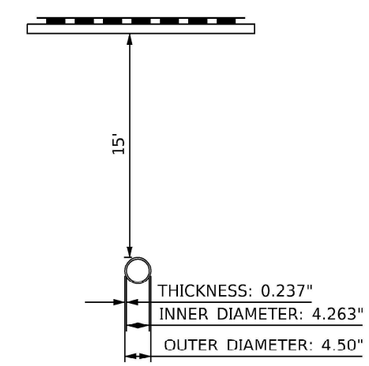


MODEL: Default
FILE NAME: pw:\\kh-pw.bentley.com:khpw-o1\Documents\01 Active Projects\MW-CHS-168959100 - IL 64\Phase III\2 Design\CAD\Plan Sheets\Communications\West Corridor\D108121-sht-comm-RR-03.dgn

Kimley»Horn
© 2020 KIMLEY-HORN AND ASSOCIATES, INC.
4701 WILLIAM D ANDERSON, SUITE 600
WARRENVILLE, IL 60555
PHONE: 630-487-5550
WWW.KIMLEY-HORN.COM

| | | |
|---|---|---|
| USER NAME = | DESIGNED - | REVISED - |
| | DRAWN - | REVISED - |
| PLOT SCALE = | CHECKED - | REVISED - |
| PLOT DATE = | DATE - | REVISED - |

**STATE OF ILLINOIS**
**DEPARTMENT OF TRANSPORTATION**

**RAILROAD CROSSING DETAIL**
**IL 64 (NORTH AVE) AND CHICAGO CENTRAL AND PACIFIC RAILROAD**

SCALE: 1" = 40' | SHEET OF SHEETS | STA. TO STA.

| F.A.P. RTE. | SECTION | COUNTY | TOTAL SHEETS | SHEET NO. |
|---|---|---|---|---|
| 307 | 2020-263-SUR.SW&TS | DUPAGE | 529 | 477 |
| | | CONTRACT NO. 62N33 | | |
| | | ILLINOIS FED. AID PROJECT | | |

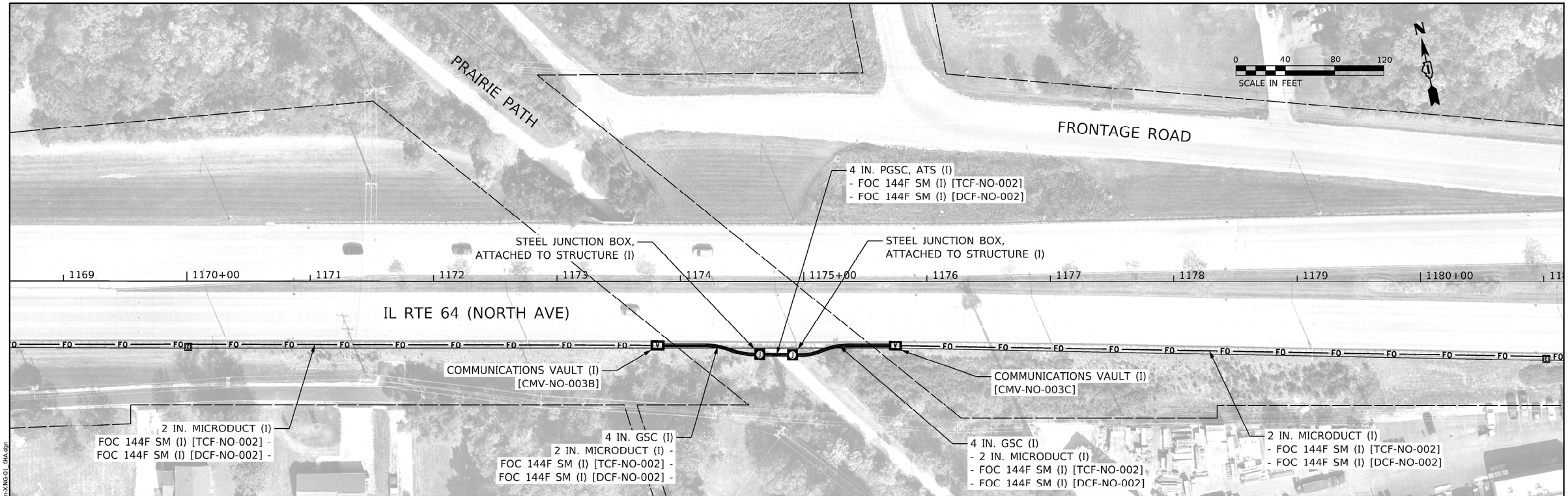


## PROFILE VIEW

LOOKING NORTH-NORTHWEST
NOT TO SCALE

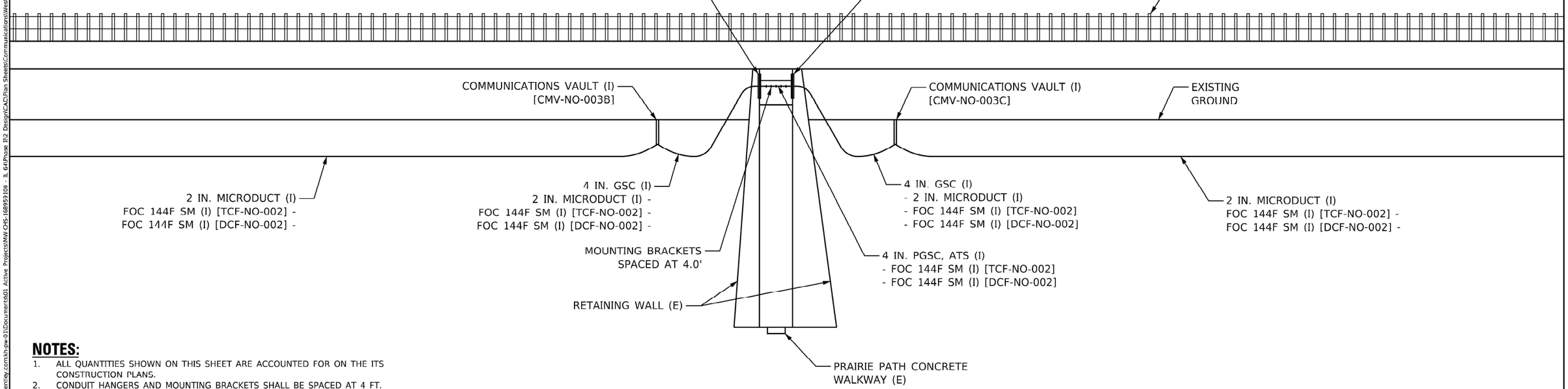


## NOTES:

1. ALL QUANTITIES SHOWN ON THIS SHEET ARE ACCOUNTED FOR ON THE ITS CONSTRUCTION PLANS.
2. CONDUIT HANGERS AND MOUNTING BRACKETS SHALL BE SPACED AT 4 FT. MAXIMUM.

MODEL: Default
FILE NAME: pw:\\kh-pw.bentley.com:kh-pw-01\Documents\01 Active Projects\MW CHS-168959100 - IL 64\Phase III\2 Design\CAD\Plan Sheets\Communications\West Corridor\D108121-sht-comm-XING-01 - GHA.dgn

Kimley»Horn
© 2023 KIMLEY-HORN AND ASSOCIATES, INC.
4901 WINFIELD ROAD, SUITE 600
WARRENVILLE, IL 60555
PHONE: 630-487-5550
WWW.KIMLEY-HORN.COM

| | | | |
|---|---|---|---|
| USER NAME = | DESIGNED - | REVISED - | |
| | DRAWN - | REVISED - | |
| PLOT SCALE = | CHECKED - | REVISED - | |
| PLOT DATE = | DATE - | REVISED - | |

**STATE OF ILLINOIS**
**DEPARTMENT OF TRANSPORTATION**

**BRIDGE/RIVER CROSSING DETAIL**
**IL 64 (NORTH AVE) OVER PRAIRIE PATH**

SCALE: 1" = 40' | SHEET OF SHEETS | STA. TO STA.

| F.A.P. RTE. | SECTION | COUNTY | TOTAL SHEETS | SHEET NO. |
|---|---|---|---|---|
| 307 | 2020-263-SUR.SW&TS | DUPAGE | 529 | 478 |
| | | CONTRACT NO. 62N33 | | |
| | ILLINOIS | FED. AID PROJECT | | |

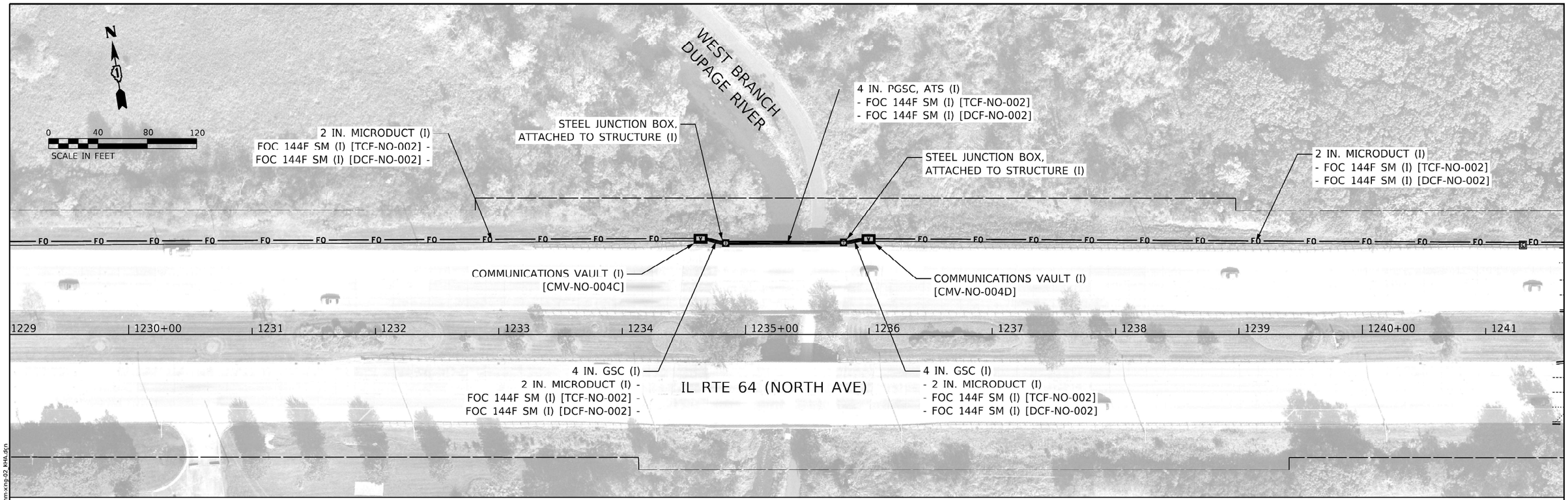


## PROFILE VIEW

LOOKING SOUTH-SOUTHEAST
NOT TO SCALE

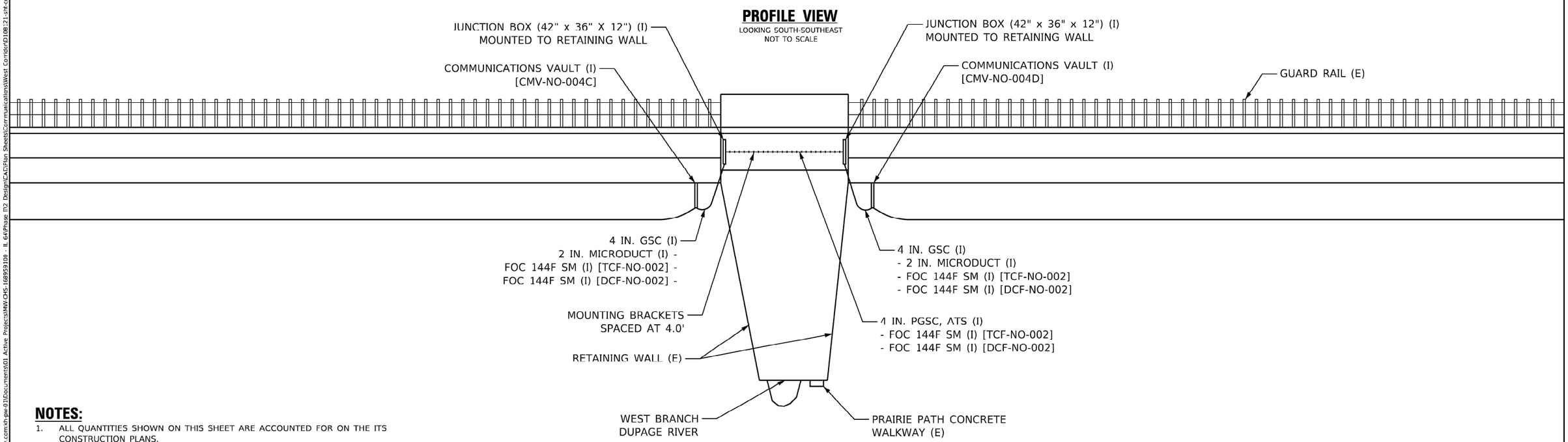


## NOTES:

1. ALL QUANTITIES SHOWN ON THIS SHEET ARE ACCOUNTED FOR ON THE ITS CONSTRUCTION PLANS.
2. CONDUIT HANGERS AND MOUNTING BRACKETS SHALL BE SPACED AT 4 FT. MAXIMUM.

MODEL: Default
FILE NAME: pw:\\kh-pw.kimley.com:kh-pw-01\Documents\01 Active Projects\MW-CHS-168959100 - IL 64\Phase III\2 Design\CAD\Plan Sheets\Communications\West Corridor\D108121-sht-comm-xing-02_KHA.dgn

Kimley»Horn
© 2020 KIMLEY-HORN AND ASSOCIATES, INC.
4504 WINFIELD ROAD, SUITE 600
WARRENVILLE, IL 60555
PHONE: 630-487-5550
WWW.KIMLEY-HORN.COM

| | | |
|---|---|---|
| USER NAME = | DESIGNED - | REVISED - |
| | DRAWN - | REVISED - |
| PLOT SCALE = | CHECKED - | REVISED - |
| PLOT DATE = | DATE - | REVISED - |

STATE OF ILLINOIS
DEPARTMENT OF TRANSPORTATION

BRIDGE/RIVER CROSSING DETAIL
IL 64 (NORTH AVE) OVER WEST BRANCH DUPAGE RIVER

SCALE: SHEET OF SHEETS STA. TO STA.

| F.A.P. RTE. | SECTION | COUNTY | TOTAL SHEETS | SHEET NO. |
|---|---|---|---|---|
| 307 | 2020-263-SUR.SW&TS | DUPAGE | 529 | 479 |
| | | CONTRACT NO. 62N33 | | |
| | | ILLINOIS | FED. AID PROJECT | |

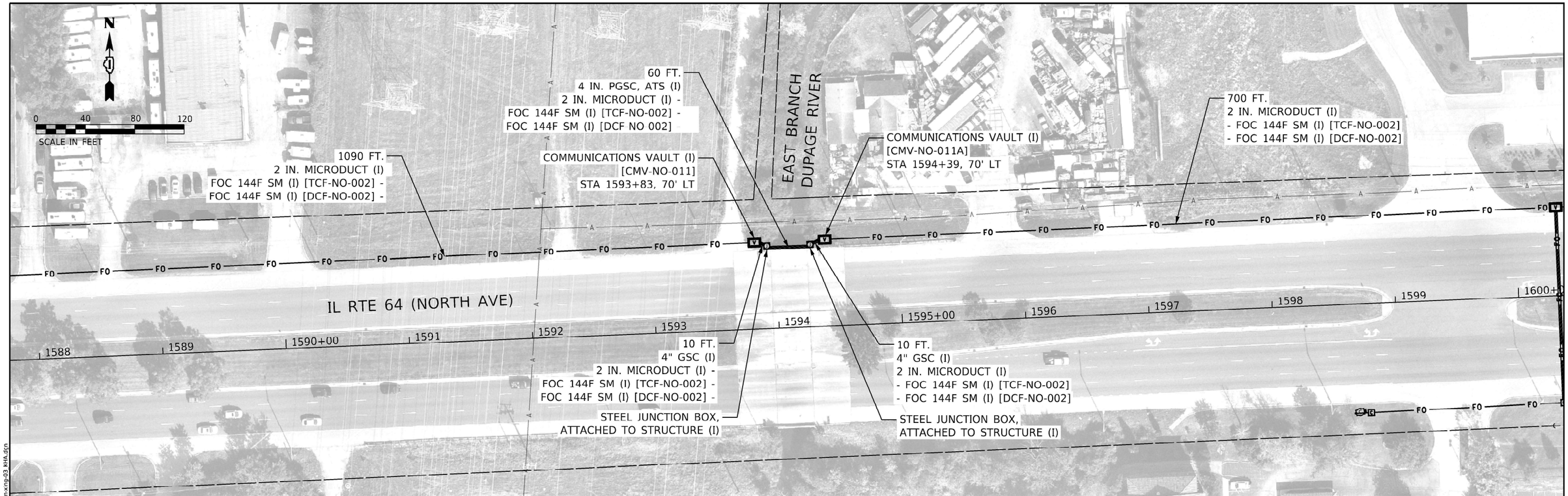


## PROFILE VIEW

LOOKING SOUTH
NOT TO SCALE

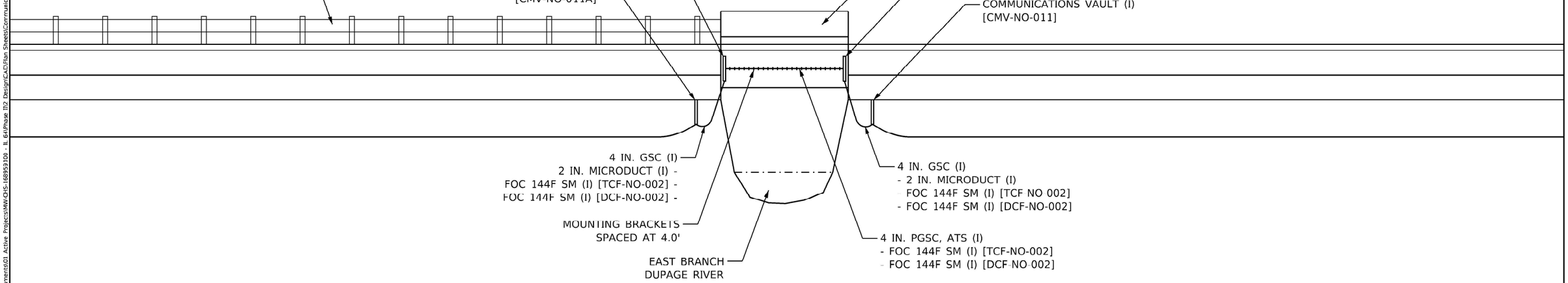


## NOTES:

1. ALL QUANTITIES SHOWN ON THIS SHEET ARE ACCOUNTED FOR ON THE ITS CONSTRUCTION PLANS.
2. CONDUIT HANGERS AND MOUNTING BRACKETS SHALL BE SPACED AT 4 FT. MAXIMUM.

MODEL: Default
FILE NAME: pw:\\kh-pw.bentley.com:kh-pw-01\Documents\01 Active Projects\MW-OHS-168959100 - IL 64\Phase III\2 Design\CAD\Plan Sheets\Communications\West Corridor\D108121-sht-comm-xing-03 KHA.dgn

Kimley»Horn
© 2020 KIMLEY-HORN AND ASSOCIATES, INC.
4901 WINTER PLACE, SUITE 400
WARRENVILLE, IL 60555
PHONE: 630-487-5550
WWW.KIMLEY-HORN.COM

| | | | |
|---|---|---|---|
| USER NAME = | DESIGNED - | REVISED - | |
| | DRAWN - | REVISED - | |
| PLOT SCALE = | CHECKED - | REVISED - | |
| PLOT DATE = | DATE - | REVISED - | |

**STATE OF ILLINOIS**
**DEPARTMENT OF TRANSPORTATION**

**BRIDGE/RIVER CROSSING DETAIL**
**IL 64 (NORTH AVE) OVER EAST BRANCH DUPAGE RIVER**

SCALE: | SHEET OF SHEETS | STA. TO STA.

| F.A.P. RTE. | SECTION | COUNTY | TOTAL SHEETS | SHEET NO. |
|---|---|---|---|---|
| 307 | 2020-263-SUR.SW&TS | DUPAGE | 529 | 480 |
| | | CONTRACT NO. 62N33 | | |
| | ILLINOIS | FED. AID PROJECT | | |

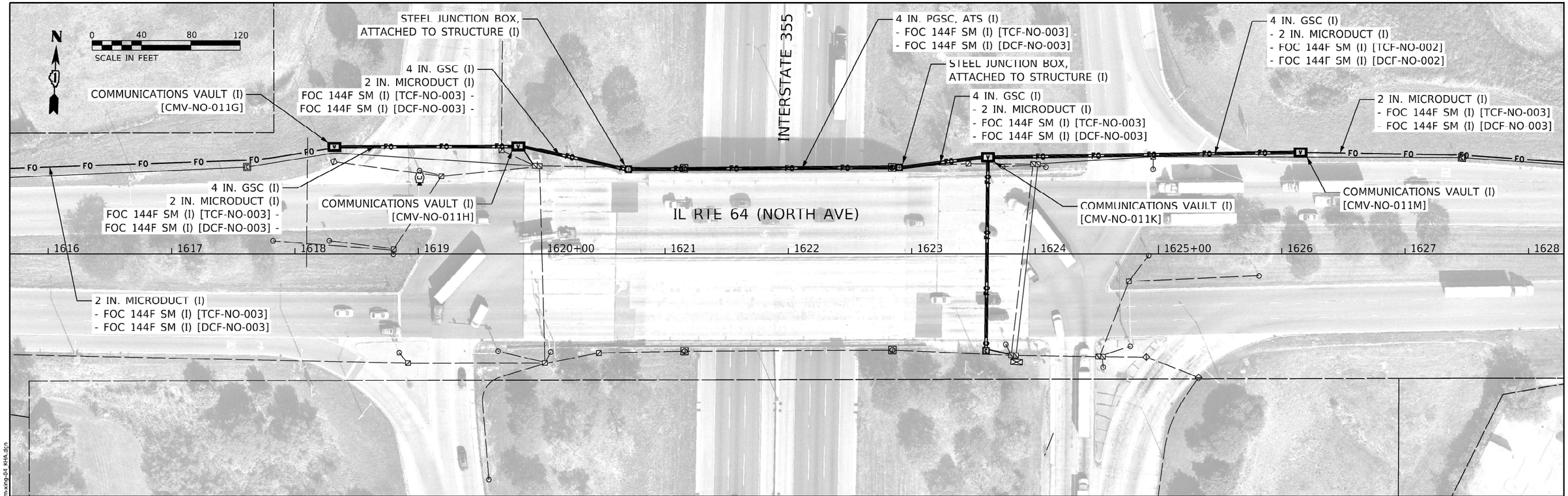


## PROFILE VIEW

LOOKING SOUTH-SOUTHEAST
NOT TO SCALE

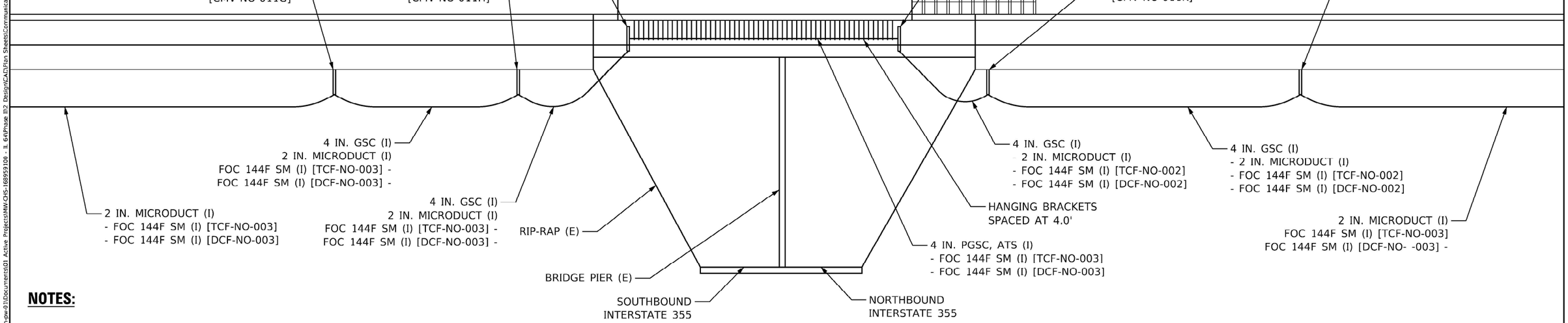


## NOTES:

1. ALL QUANTITIES SHOWN ON THIS SHEET ARE ACCOUNTED FOR ON THE ITS CONSTRUCTION PLANS.
2. CONDUIT HANGERS AND MOUNTING BRACKETS SHALL BE SPACED AT 4 FT. MAXIMUM.

MODEL: Default
FILE NAME: pw:\\kh-pw.kimley.com:kh-pw-01\Documents\01 Active Projects\MW-CHS-168959100 - IL 64\Phase III\2 Design\CAD\Plan Sheets\Communications\West Corridor\D108121-sht-comm-xing-04 RHA.dgn

| Kimley»Horn | USER NAME = | DESIGNED - | REVISED - | STATE OF ILLINOIS DEPARTMENT OF TRANSPORTATION | BRIDGE/RIVER CROSSING DETAIL IL 64 (NORTH AVE) AT I-355 | F.A.P. RTE. | SECTION | COUNTY | TOTAL SHEETS | SHEET NO. |
|---|---|---|---|---|---|---|---|---|---|---|
| | | DRAWN - | REVISED - | | | 307 | 2020-263-SUR.SW&TS | DUPAGE | 529 | 481 |
| | PLOT SCALE = | CHECKED - | REVISED - | | | | | CONTRACT NO. 62N33 | | |
| | PLOT DATE = | DATE - | REVISED - | | SCALE: SHEET OF SHEETS STA. TO STA. | | ILLINOIS | FED. AID PROJECT | | |

© 2020 KIMLEY-HORN AND ASSOCIATES, INC.
4204 WINFIELD ROAD, SUITE 600
WARRENVILLE, IL 60555
PHONE: 630-487-5550
WWW.KIMLEY-HORN.COM

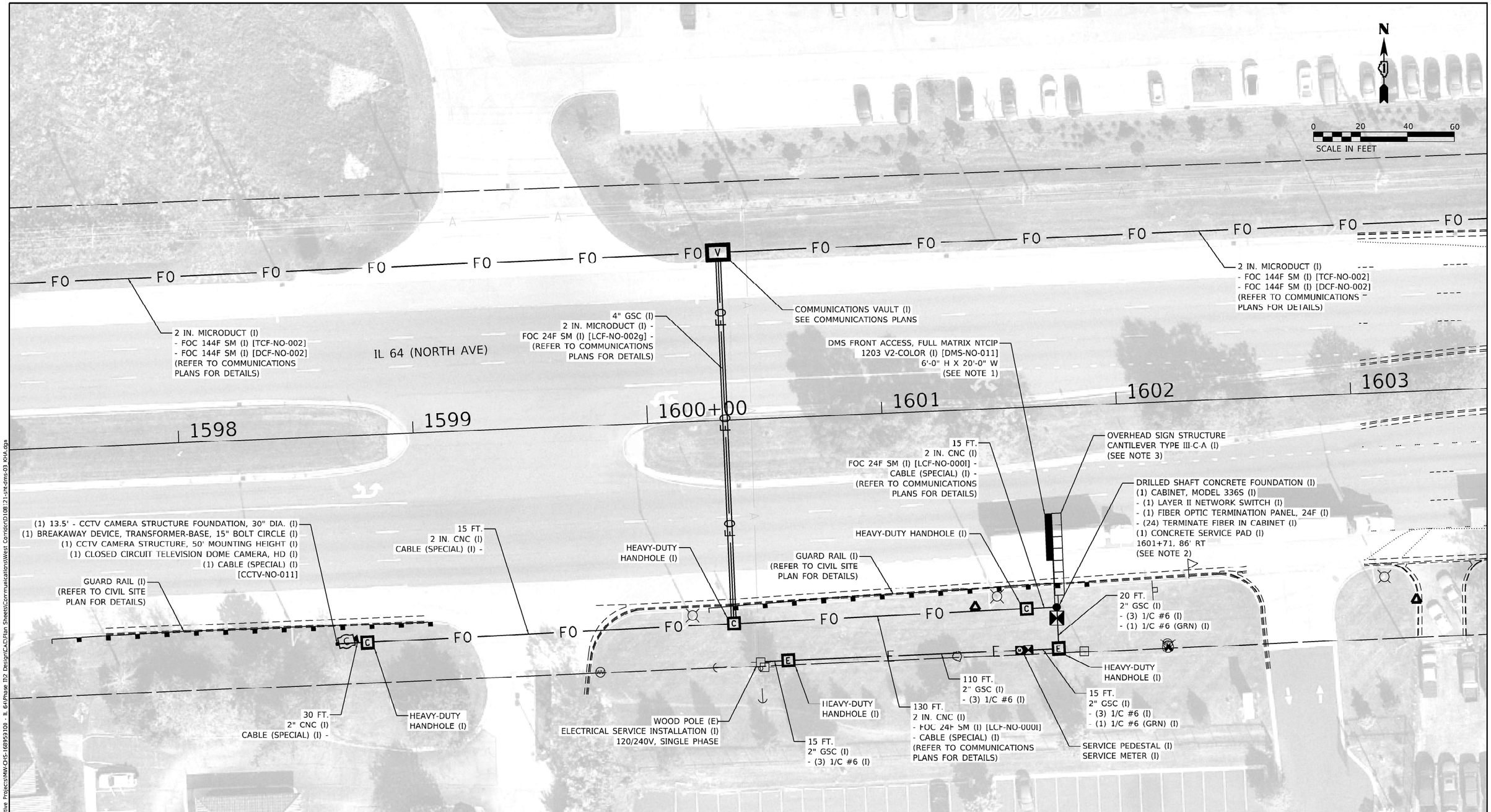


NOTES:

1. DMS SIZE IS NOMINAL. DIMENSIONS VARY PER MANUFACTURER.
2. PRIOR TO CONSTRUCTING DMS FOUNDATION, CONTRACTOR TO VERIFY THE LOCATION OF THE FOUNDATION AND CANTILEVER SIGN STRUCTURE MEET THE MINIMUM GUARDRAIL OFFSET REQUIREMENTS.
3. REFER TO CANTILEVER SIGN STRUCTURE PLANS FOR ADDITIONAL DETAILS.
4. REFER TO COMMUNICATIONS PLANS FOR COMMUNICATIONS INFORMATION AND DETAILS.
5. REFER TO CIVIL SITE PLAN FOR GUARDRAIL DETAILS.
6. BREAKAWAY COUPLING (PER ARTICLE 838 OF THE STANDARD SPECIFICATIONS) MAY BE USED IN LIEU OF BREAKAWAY DEVICE, TRANSFORMER-BASE, 15" BOLT CIRCLE SUBJECT TO APPROVAL OF THE ENGINEER.

MODEL: Default
FILE NAME: pw:\\kh-pw.bentley.com:kh-pw-01\Documents\01 Active Projects\MW-CHS-168959100 - IL 64\Phase III\2 Design\CAD\Plan Sheets\Communications\West Corridor\D108121-sht-dms-03_KHA.dgn

Kimley»Horn
© 2020 KIMLEY-HORN AND ASSOCIATES, INC.
4901 WARRENVILLE ROAD, SUITE 600
WARRENVILLE, IL 60555
PHONE: 630-487-5550
WWW.KIMLEY-HORN.COM

| | | |
|---|---|---|
| USER NAME = | DESIGNED - | REVISED - |
| | DRAWN - | REVISED - |
| PLOT SCALE = | CHECKED - | REVISED - |
| PLOT DATE = | DATE - | REVISED - |

**STATE OF ILLINOIS**
**DEPARTMENT OF TRANSPORTATION**

**SITE INSTALLATION PLANS (DMS/CCTV, TIE–IN)**
**DMS LOCATION #1**

SCALE: SHEET OF SHEETS STA. TO STA.

| F.A.P. RTE. | SECTION | COUNTY | TOTAL SHEETS | SHEET NO. |
|---|---|---|---|---|
| 307 | 2020-263-SUR.SW&TS | DUPAGE | 529 | 482 |
| | | CONTRACT NO. 62N33 | | |
| | ILLINOIS | FED. AID PROJECT | | |

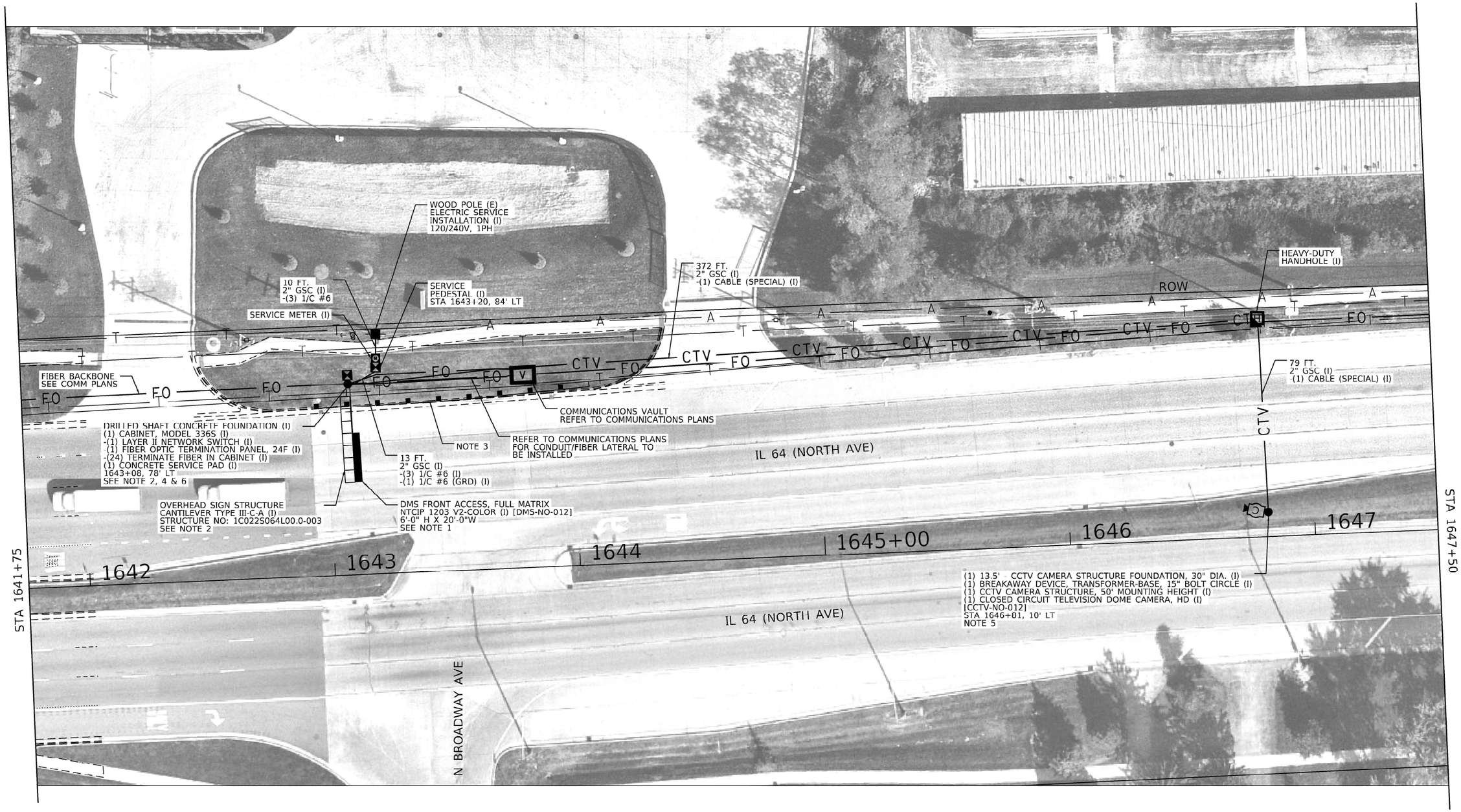


NOTES:

1. DMS SIZE IS NOMINAL. DIMENSIONS MAY VARY BY MANUFACTURER.
2. SEE CANTILEVER SIGN STRUCTURE PLANS FOR FURTHER DETAIL.
3. SEE CIVIL SITE PLAN FOR GUARDRAIL DETAILS.
4. REFER TO COMMUNICATIONS PLANS FOR FIBER TERMINATION.
5. BREAKAWAY COUPLING (PER ARTICLE 838 OF THE STANDARD SPECIFICATIONS) MAY BE USED IN LIEU OF BREAKAWAY DEVICE, TRANSFORMER-BASE, 15" BOLT CIRCLE SUBJECT TO APPROVAL OF THE ENGINEER.
6. PRIOR TO CONSTRUCTING DMS FOUNDATION, CONTRACTOR TO VERIFY THE LOCATION OF THE FOUNDATION AND CANTILEVER SIGN STRUCTURE MEET THE MINIMUM GUARDRAIL OFFSET REQUIREMENTS.

0 20 40 60
SCALE IN FEET

MODE: Default
FILE NAME: pw:\\bh-pw.bentley.com:bh-pw01\Documents\01 Active Projects\MW-OHS-16895310 - IL 64\Phase II\2 Design\CAD\Plan Sheets\TS&lsh\DMS\West Corridor\D108-21-sht-dms01-TSM.dgn

| | | | | | | | | | | |
|---|---|---|---|---|---|---|---|---|---|---|
| TranSmart 100 S. Wacker Drive Suite 400 Chicago, Illinois 60606 | USER NAME = dmeier | DESIGNED - DJM | REVISED - | STATE OF ILLINOIS DEPARTMENT OF TRANSPORTATION | SITE INSTALLATION PLANS (DMS/CCTV, TIE-IN) DMS LOCATION #2 | F.A.P. RTE. | SECTION | COUNTY | TOTAL SHEETS | SHEET NO. |
| | | DRAWN - JNR | REVISED - | | | 307 | 2020-263-SUR.SW&TS | DUPAGE | 529 | 483 |
| | PLOT SCALE = 40.0000 ' / in. | CHECKED - REL | REVISED - | | | | | CONTRACT NO. 62N33 | | |
| | PLOT DATE = 1/24/2025 | DATE - | REVISED - | | SCALE: 1" = 20' SHEET 1 OF 3 SHEETS STA. 1641+75 TO STA. 1647+50 | | ILLINOIS FED. AID PROJECT | | | |

NOTES:
1. DMS SIZE IS NOMINAL. DIMENSIONS VARY BY MANUFACTURER.
2. SEE CANTILEVER SIGN STRUCTURE PLANS FOR FURTHER DETAIL.
3. SEE CIVIL SITE PLANS FOR FURTHER MEDIAN REMOVE/BARRIER INSTALLATION DETAILS.
4. REFER TO COMMUNICATIONS PLANS FOR FIBER LATERAL TO BE INSTALLED.
5. REFER TO COMMUNICATIONS PLANS FOR FIBER TERMINATIONS.
6. BREAKAWAY COUPLING (PER ARTICLE 838 OF THE STANDARD SPECIFICATIONS) MAY BE USED IN LIEU OF BREAKAWAY DEVICE, TRANSFORMER-BASE, 15" BOLT CIRCLE) SUBJECT TO APPROVAL OF THE ENGINEER.

0 20 40 60
SCALE IN FEET

MODEL: Default
FILE NAME: pw:\\bh-pw.bentley.com:bh-pw-01\Documents\01 Active Projects\MW-CHS-1689939100 - IL 64\Phase II\2 Design\CAD\Plan Sheets\TS&I\sh_DMS\West Corridor\D108 21-dhs-dms02_TSM.dgn

| | | | | | | | | | | | |
|---|---|---|---|---|---|---|---|---|---|---|---|
| TranSmart 100 S. Wacker Drive Suite 400 Chicago, Illinois 60606 | USER NAME = dmeier | DESIGNED - DJM | REVISED - | STATE OF ILLINOIS DEPARTMENT OF TRANSPORTATION | SITE INSTALLATION PLANS (DMS/CCTV, TIE-IN) DMS LOCATION #3 | | | F.A.P. RTE. | SECTION | COUNTY | TOTAL SHEETS / SHEET NO. |
| | | DRAWN - JNR | REVISED - | | | | | 307 | 2020-263-SUR.SW&TS | DUPAGE | 529 / 484 |
| | PLOT SCALE = 40.0000 ' / in. | CHECKED - REL | REVISED - | | | | | | | CONTRACT NO. 62N33 | |
| | PLOT DATE = 1/24/2025 | DATE - | REVISED - | | SCALE: 1" = 20' | SHEET 2 OF 3 SHEETS | STA. 1791+50 TO STA. 1797+25 | | ILLINOIS | FED. AID PROJECT | |

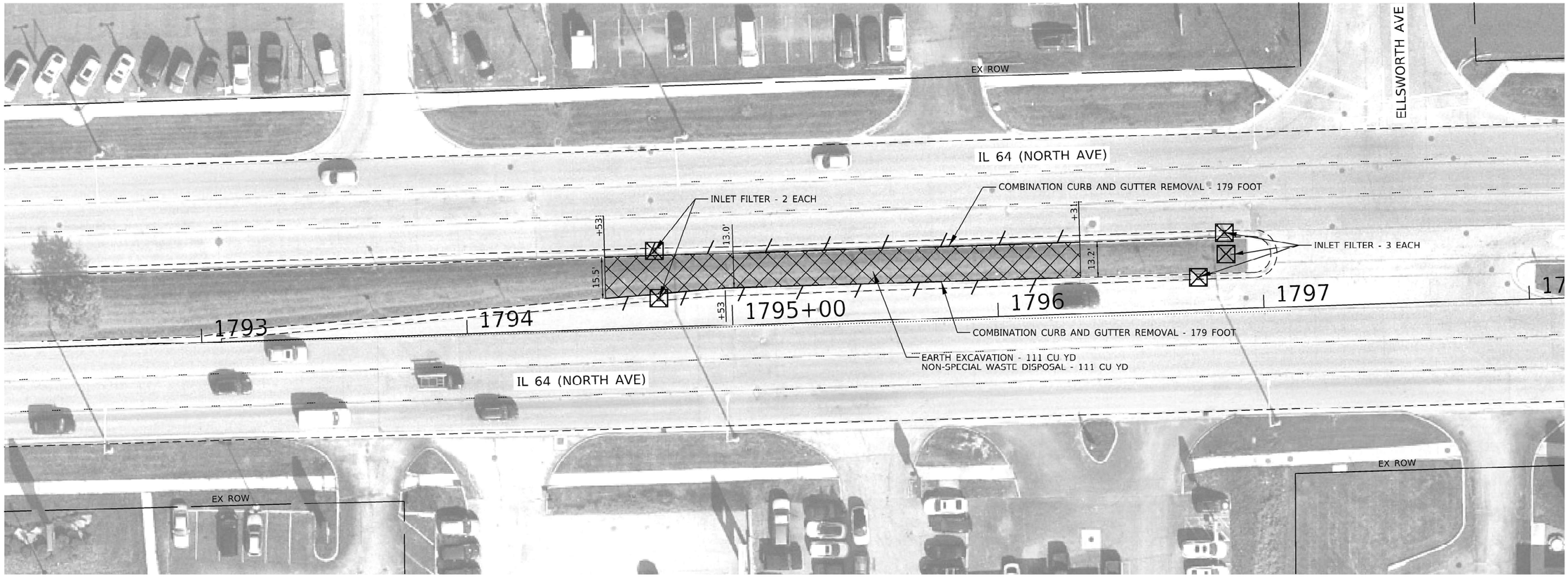


## LEGEND

LINEAR REMOVAL ITEMS

EARTH EXCAVATION
NON-SPECIAL WASTE DISPOSAL

INLET FILTER

NOTES:

1. THE CONTRACTOR SHALL MAINTAIN ALL EXISTING DRAINAGE PATTERNS DURING THE DURATION OF CONSTRUCTION ACTIVITIES. ANY TEMPORARY DRAINAGE REQUIRED WILL NOT BE PAID FOR SEPARATELY, BUT SHALL BE CONSIDERED INCIDENTAL TO THE PROJECT.
2. EROSION CONTROL EFFORTS SHALL BE INSTALLED PRIOR TO CONSTRUCTION AND SHALL BE MAINTAINED THROUGHOUT.
3. THE CONTRACTOR SHALL USE CARE IN REMOVING OR EXCAVATING NEAR ALL EXISTING ITEMS WHICH WILL REMAIN. ANY DAMAGE DONE TO EXISTING ITEMS BY THE CONTRACTOR SHALL BE REPAIRED AT THE CONTRACTOR'S EXPENSE.

N

0 20 40 60
SCALE IN FEET

MODE: Default
FILE NAME: pw:\\kh-pw.bentley.com:kh-pw-31\Documents\01 Active Projects\MW-OHS-16895310 - IL 64\Phase II\2 Design\CAD\Plan Sheets\Communications\West Corridor\D108121-sht-rem01 MH.dgn

Kimley»Horn
© 2020 KIMLEY-HORN AND ASSOCIATES, INC.
4901 WINFIELD ROAD, SUITE 400
WARRENVILLE, IL 60555
PHONE: 630-487-5550
WWW.KIMLEY-HORN.COM

| | | | |
|---|---|---|---|
| USER NAME = | DESIGNED - PWF | REVISED - | |
| | DRAWN - PWF | REVISED - | |
| PLOT SCALE = | CHECKED - KJC | REVISED - | |
| PLOT DATE = | DATE - | REVISED - | |

STATE OF ILLINOIS
DEPARTMENT OF TRANSPORTATION

SITE REMOVAL PLAN
IL 64 (NORTH AVE) SMART CORRIDOR

SCALE: 1" = 20' | SHEET 1 OF 1 SHEETS | STA. 1792+50.00 TO STA. 1798+00.00

| F.A.P. RTE. | SECTION | COUNTY | TOTAL SHEETS | SHEET NO. |
|---|---|---|---|---|
| 307 | 2020-263-SUR.SW&TS | DUPAGE | 529 | 485 |

CONTRACT NO. 62N33

ILLINOIS | FED. AID PROJECT

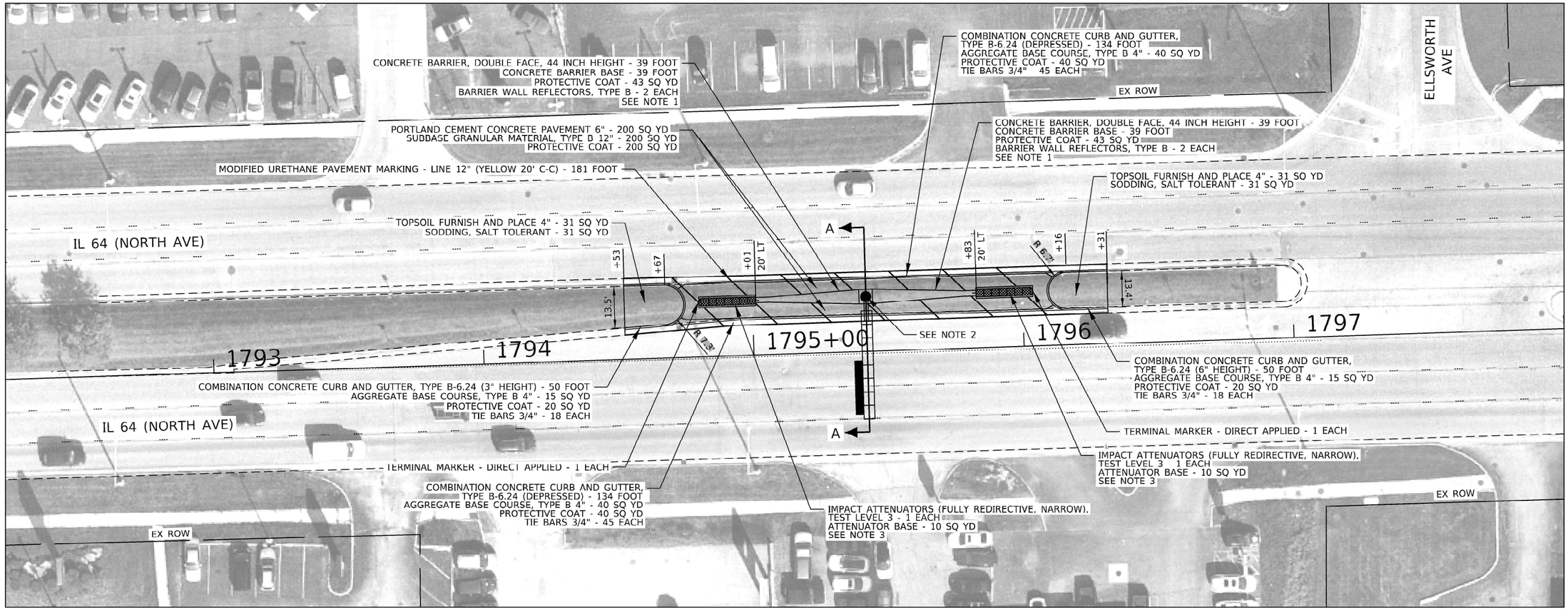


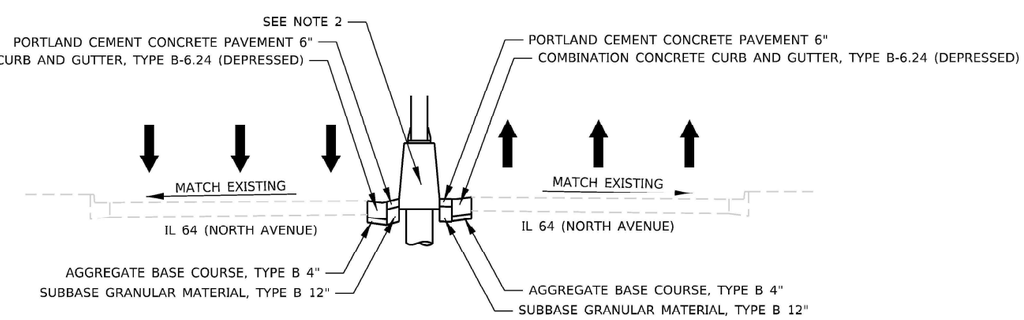


## SECTION A–A

NOTES:

1. DOUBLE FACE BARRIER WALL TRANSITION TO BE PAID FOR AS CONCRETE BARRIER, DOUBLE FACE, 44 INCH HEIGHT.
2. SEE ITS AND STRUCTURAL PLANS FOR DESIGN AND INSTALLATION OF DMS SIGN TRUSS SIGN AND FOUNDATION.
3. IMPACT ATTENUATOR SHALL BE FROM IDOT'S APPROVED QUALIFIED PRODUCT LIST AND MEET MASH TEST LEVEL 3 FOR 62 MPH.

## LEGEND

TOPSOIL FURNISH AND PLACE 4"
SODDING, SALT TOLERANT

N

0 20 40 60
SCALE IN FEET

MODEL: Default
FILE NAME: pw:\\khpw.bentley.com:khpw-01\Documents\01 Active Projects\MWOHS-168959100 - IL 64\Phase II\2 Design\CAD\Plan Sheets\Communications\West Corridor\D108121-sht-dy01 Kit.dgn

Kimley»Horn
© 2020 KIMLEY-HORN AND ASSOCIATES, INC.
4201 WINFIELD ROAD, SUITE 600
WARRENVILLE, IL 60555
PHONE: 630-487-5550
WWW.KIMLEY-HORN.COM

| | | |
|---|---|---|
| USER NAME = | DESIGNED - | REVISED - |
| | DRAWN - | REVISED - |
| PLOT SCALE = | CHECKED - | REVISED - |
| PLOT DATE = | DATE - | REVISED - |

STATE OF ILLINOIS
DEPARTMENT OF TRANSPORTATION

SITE PLAN
IL 64 (NORTH AVE) SMART CORRIDOR

SCALE: 1" = 20' | SHEET 1 OF 1 SHEETS | STA. 1792+50.00 TO STA. 1797+50.00

| F.A.P. RTE. | SECTION | COUNTY | TOTAL SHEETS | SHEET NO. |
|---|---|---|---|---|
| 307 | 2020-263-SUR.SW&TS | DUPAGE | 529 | 486 |
| | | CONTRACT NO. 62N33 | | |
| | | ILLINOIS | FED. AID PROJECT | |

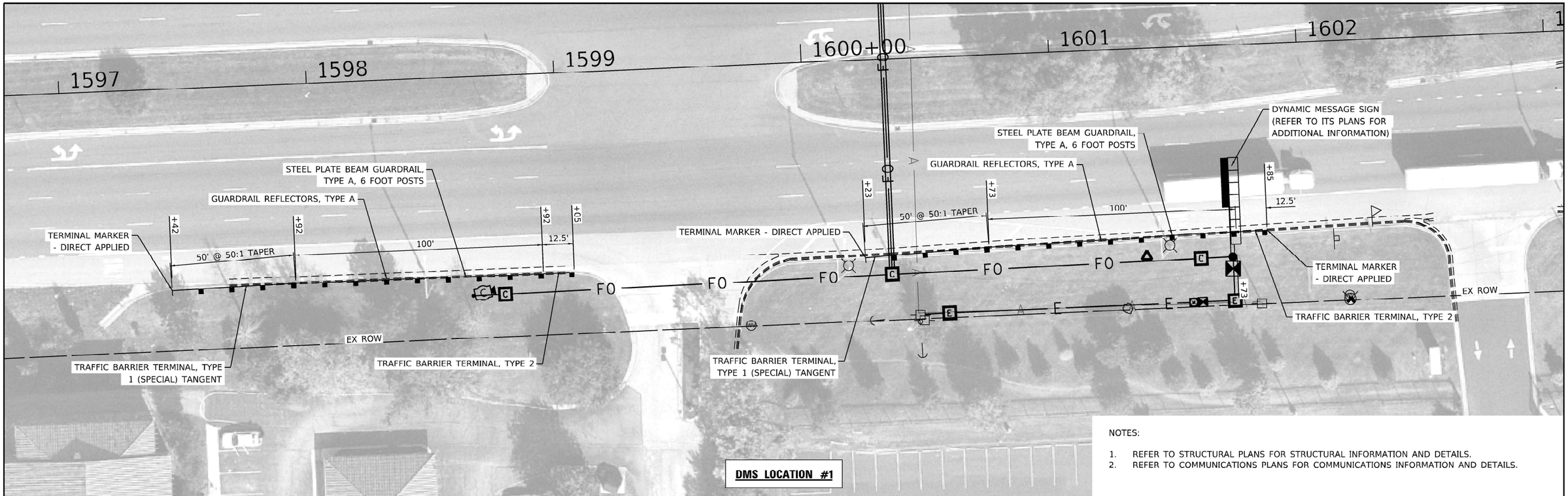


DMS LOCATION #1

NOTES:

1. REFER TO STRUCTURAL PLANS FOR STRUCTURAL INFORMATION AND DETAILS.
2. REFER TO COMMUNICATIONS PLANS FOR COMMUNICATIONS INFORMATION AND DETAILS.

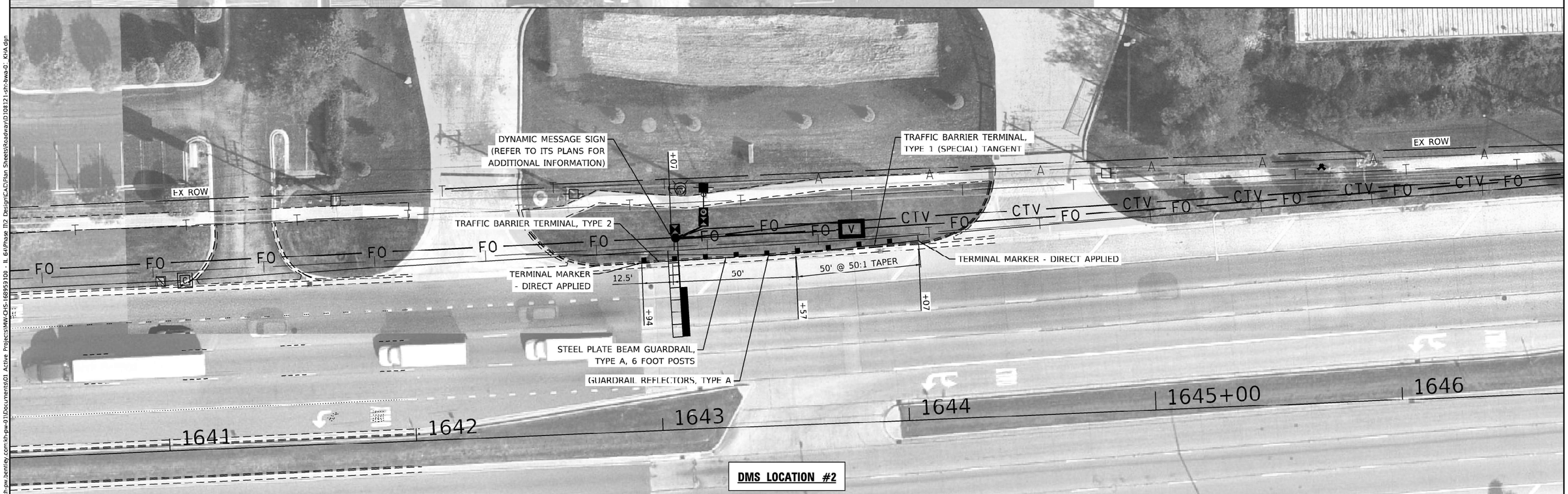


DMS LOCATION #2

MODEL: Default
FILE NAME: pw:\\kh-pw.bentley.com:kh-pw-01\Documents\01 Active Projects\MWCHS-16895100 - IL 64\Phase III\2 Design\CAD\Plan Sheets\Roadway\0108121-sht-bwa-01_KIA.dgn


Kimley»Horn
© 2020 KIMLEY-HORN AND ASSOCIATES, INC.
4201 WINFIELD ROAD, SUITE 600
WARRENVILLE, IL 60555
PHONE: 630-487-5550
WWW.KIMLEY-HORN.COM


| | | |
|---|---|---|
| USER NAME = | DESIGNED - | REVISED - |
| | DRAWN - | REVISED - |
| PLOT SCALE = | CHECKED - | REVISED - |
| PLOT DATE = | DATE - | REVISED - |

STATE OF ILLINOIS
DEPARTMENT OF TRANSPORTATION

SITE INSTALLATION PLANS (DMS/CCTV, TIE–IN)
DMS LOCATION #1 AND #2

SCALE: | SHEET OF SHEETS | STA. TO STA.

| F.A.P. RTE. | SECTION | COUNTY | TOTAL SHEETS | SHEET NO. |
|---|---|---|---|---|
| 307 | 2020-263-SUR.SW&TS | DUPAGE | 529 | 487 |
| | | CONTRACT NO. 62N33 | | |
| | | ILLINOIS | FED. AID PROJECT | |

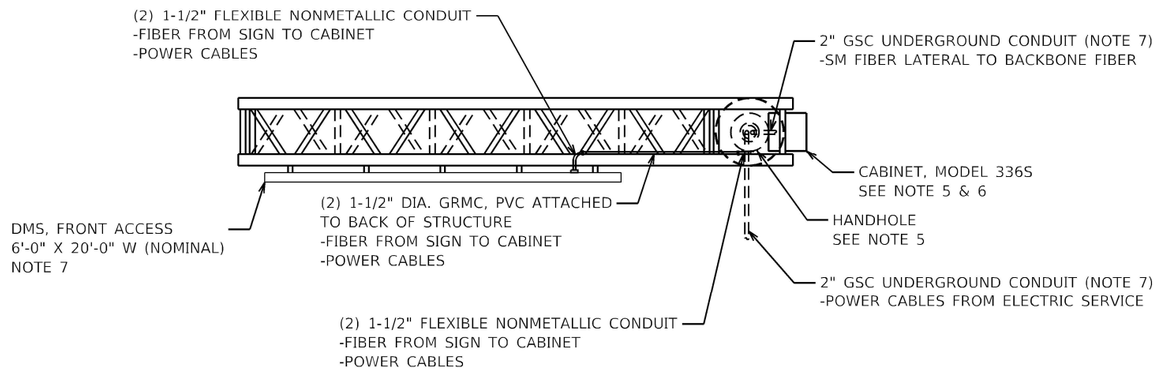


**PLAN VIEW**
N.T.S.

NOTES

1. ALL CONDUIT BENDS SHALL HAVE A MINIMUM RADIUS OF 12 INCHES. CONTRACTOR SHALL INSTALL SM FIBER LATERAL SO AS NOT TO VIOLATE MANUFACTURER'S SPECIFIED BENDING RADIUS.
2. ALL CONDUIT ATTACHED TO STRUCTURE SHALL BE GALVANIZED RIGID METALIC CONDUIT, PVC COATED (GRMC, PVC). CONDUIT SHALL BE SECURED TO THE STRUCTURE WITH PVC COATED CONDUIT CLAMPS SPACED AT A MAXIMUM DISTANCE OF 5'.
3. THE USE OF LIQUID TIGHT FLEXIBLE NONMETALLIC CONDUIT SHALL BE LIMITED TO LOCATIONS WHERE MOVEMENT IS ANTICIPATED AND SHALL NOT EXCEED 5' IN LENGTH.
4. ALL CONDUIT ON STRUCTURE IS INCLUDED UNDER PAY ITEM X0327130 (DMS FRONT ACCESS, FULL MATRIX, NTCIP 1203 V2-COLOR) AND WILL NOT BE PAID FOR SEPARATELY.
5. INSTALL CONDUIT HUB(S) TO ACCEPT 1-1/2" FLEXIBLE NONMETALLIC CONDUIT. THIS WORK IS INCLUDED UNDER PAY ITEM X0327130 (DMS FRONT ACCESS, FULL MATRIX,NTCIP 1203 V2-COLOR) AND WILL NOT BE PAID FOR SEPARATELY.
6. THE CABINET, MODEL 336S ATTACHED TO THE DMS SIGN STRUCTURE SHALL BE PAID FOR SEPARATELY UNDER PAY ITEM X1400416 (CABINET, MODEL 336S).
7. THIS IS A TYPICAL DETAIL. SITE CONDITIONS WILL VARY. DETERMINE THE ORIENTATION OF THE SIGN, JUNCTION BOX, AND THE CONDUIT APPROACH/ENTRY TO THE FOUNDATION BASED ON SITE SPECIFIC CONDITIONS (REFER TO PLANS).

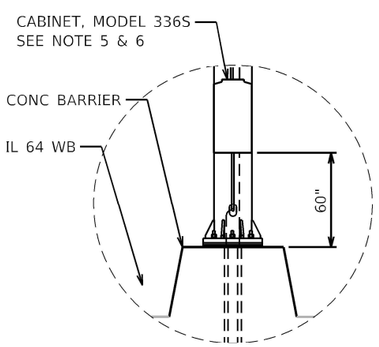


**DETAIL A – DMS LOCATION #3**
N.T.S.

**IL 64 (NORTH AVENUE)**

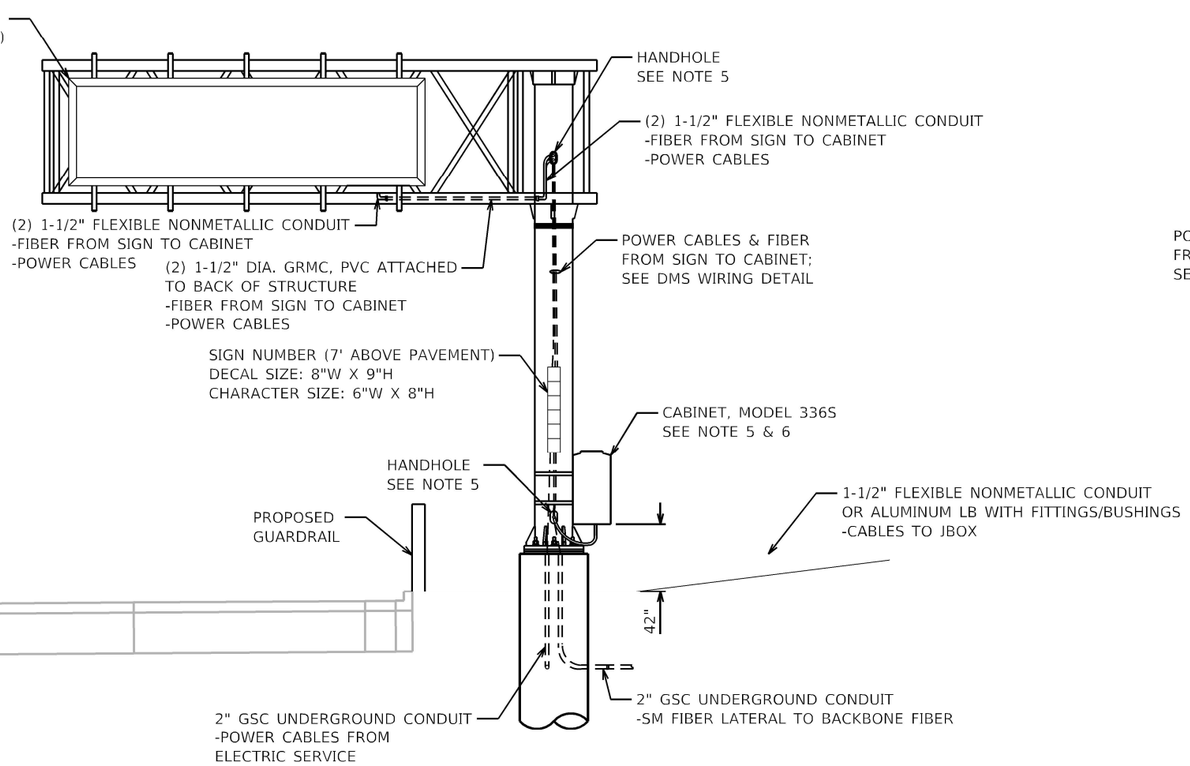


**FRONT ELEVATION VIEW**
N.T.S.

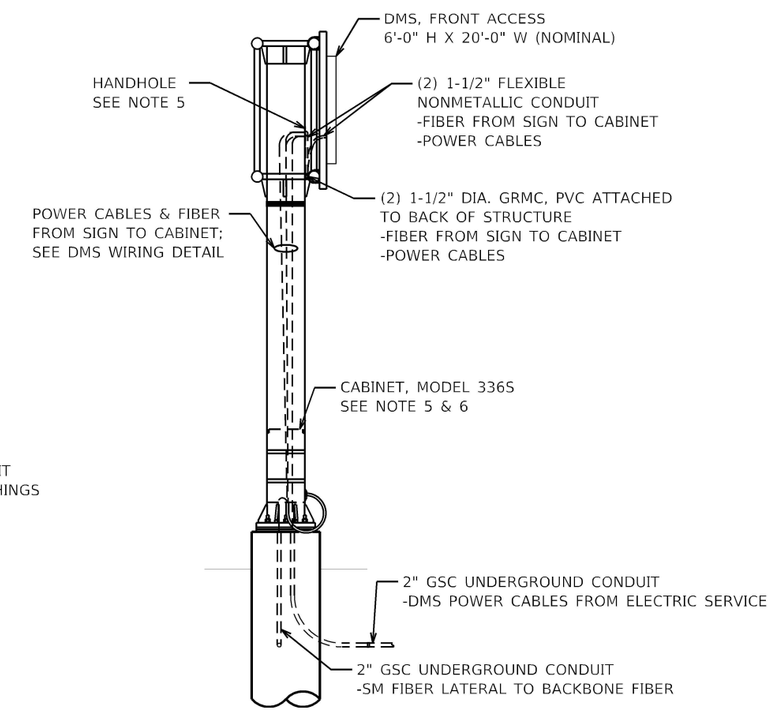


**SIDE ELEVATION VIEW**
N.T.S.

MODEL: Default
FILE NAME: pw:\\jb-pw.bentley.com:bb-pw01\Documents\01 Active Projects\MW-CHS-1689930 - IL 64\Phase III.2 Design\CADD\Plan Sheets\ITS&Sdsh\DMS\West Corridor\D108321-sht-dmsdetail01_TSM.dgn

| | | | | | | | | | |
|---|---|---|---|---|---|---|---|---|---|
| TranSmart 100 S. Wacker Drive Suite 400 Chicago, Illinois 60606 | USER NAME = dmeier | DESIGNED - DJM | REVISED - | STATE OF ILLINOIS DEPARTMENT OF TRANSPORTATION | DEVICE DETAILS TYPICAL DMS INSTALLATION | F.A.P. RTE. | SECTION | COUNTY | TOTAL SHEETS / SHEET NO. |
| | | DRAWN - JNR | REVISED - | | | 307 | 2020-263-SUR,SW&TS | DUPAGE | 529 / 488 |
| | PLOT SCALE = 2.0000 ' / in. | CHECKED - REL | REVISED - | | | | | CONTRACT NO. 62N33 | |
| | PLOT DATE = 1/24/2025 | DATE - | REVISED - | | SCALE: N.T.S. SHEET 1 OF 6 SHEETS STA. N/A TO STA. N/A | | ILLINOIS FED. AID PROJECT | | |

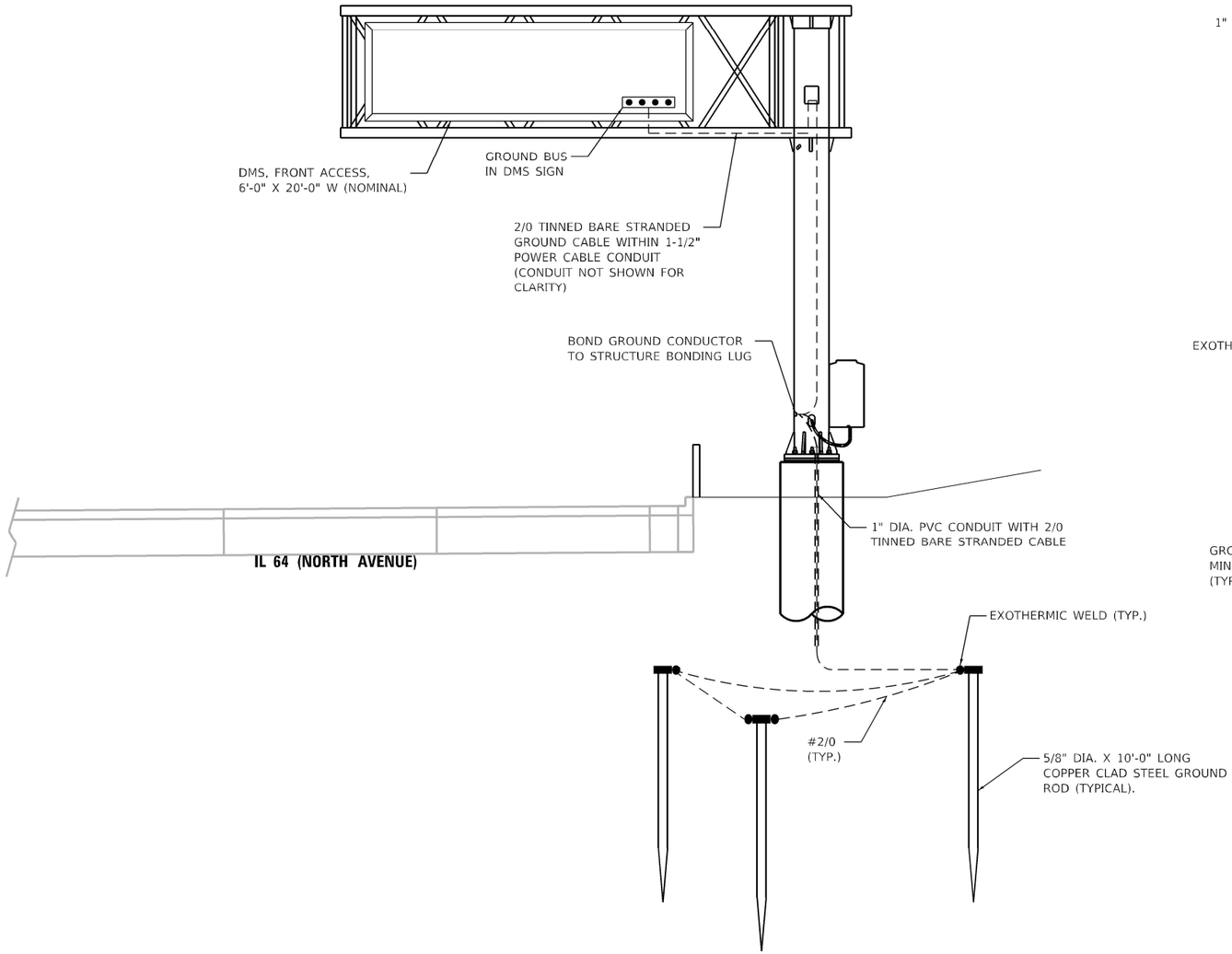


**FRONT ELEVATION VIEW**

N.T.S.

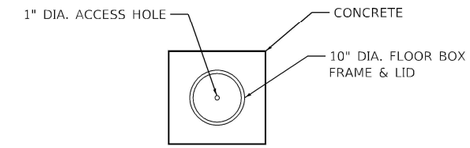


**GROUND WELL PLAN DETAIL**

N.T.S.

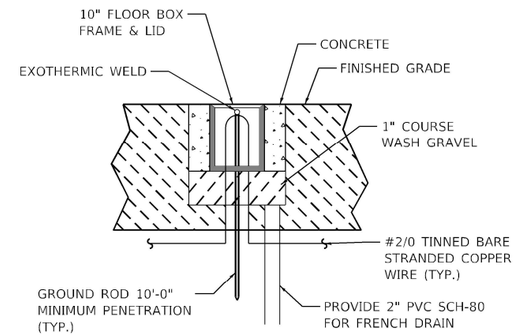


**GROUND WELL ELEVATION DETAIL**

N.T.S.

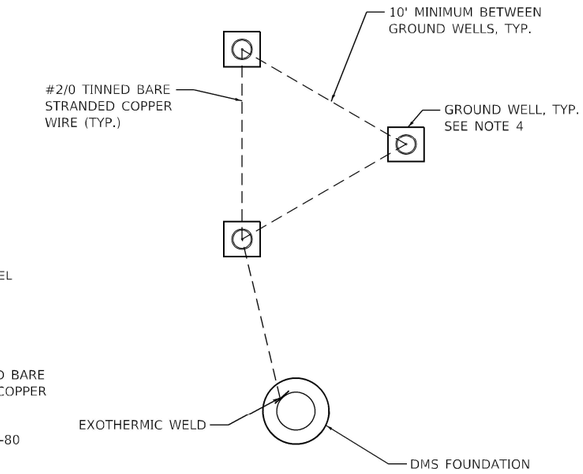


**GROUNDING SCHEMATIC**

N.T.S.

NOTES:

1. GROUNDING SYSTEM IS INCLUDED UNDER PAY ITEM X0327130 (DMS FRONT ACCESS, FULL MATRIX, NTCIP 1203 V2-COLOR AND WILL NOT BE PAID SEPARATELY.
2. GROUND RODS SHALL BE INSTALLED IN GROUND WELLS AT FINISHED GRADE.
3. AT LEAST AN 8-INCH MINIMUM BENDING RADIUS SHALL BE MAINTAINED ON ALL GROUNDING ELECTRODE CONDUCTORS. THE ANGLE OF ANY BENDING SHALL NOT BE LESS THAN 90 DEGREES.
4. GROUND WELLS SHALL NOT BE PLACED IN PAVED AREAS. FOR DMS LOCATION #2, ALL GROUND WELLS SHALL BE PLACED PAST THE END OF CONCRETE BARRIER/ATTENUATOR SYSTEM.
5. THIS IS A TYPICAL DETAIL. SITE CONDITIONS WILL VARY. DETERMINE THE ORIENTATION OF THE SIGN, AND JUNCTION BOX BASED ON SITE SPECIFIC CONDITIONS (REFER TO PLANS).

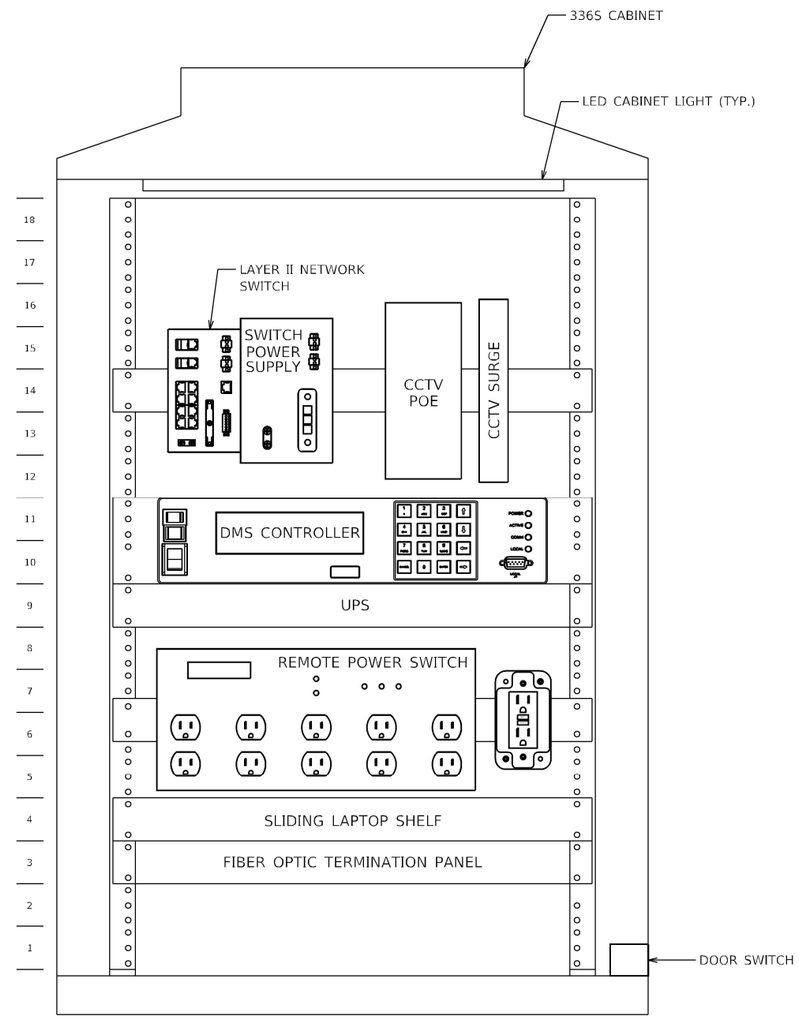


336S DMS CABINET - TYPICAL CABINET LAYOUT

FRONT ELEVATION VIEW

MODEL: Default
FILE NAME: pw:\\sh-pw.bentley.com:sh-pw40\Documents\01 Active Projects\MW-CHS-1689593100 - IL 64\Phase III\2 Design\CADD\Plan Sheets\ITS\dsk\DMS\West Corridor\D108121-sht-dmsdetail06_TSM.dgn

| | | | |
|---|---|---|---|
| TranSmart<br>100 S. Wacker Drive Suite 400<br>Chicago, Illinois 60606 | USER NAME = dmeier | DESIGNED - DJM | REVISED - |
| | | DRAWN - DJM | REVISED - |
| | PLOT SCALE = 2.0000 ' / in. | CHECKED - REL | REVISED - |
| | PLOT DATE = 1/24/2025 | DATE - | REVISED - |

**STATE OF ILLINOIS**
**DEPARTMENT OF TRANSPORTATION**

**DEVICE DETAILS**
**336S CABINET LAYOUT**

SCALE: N.T.S. | SHEET 3 OF 6 SHEETS | STA. N/A | TO STA. N/A

| F.A.P. RTE. | SECTION | COUNTY | TOTAL SHEETS | SHEET NO. |
|---|---|---|---|---|
| 307 | 2020-263-SUR,SW&TS | DUPAGE | 529 | 490 |
| | | CONTRACT NO. 62N33 | | |
| | | ILLINOIS | FED. AID PROJECT | |

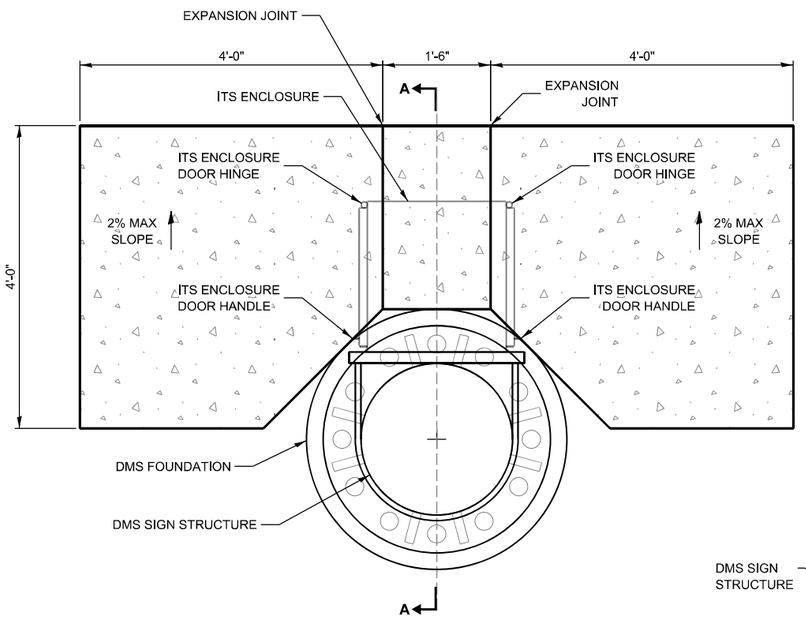


TOP VIEW

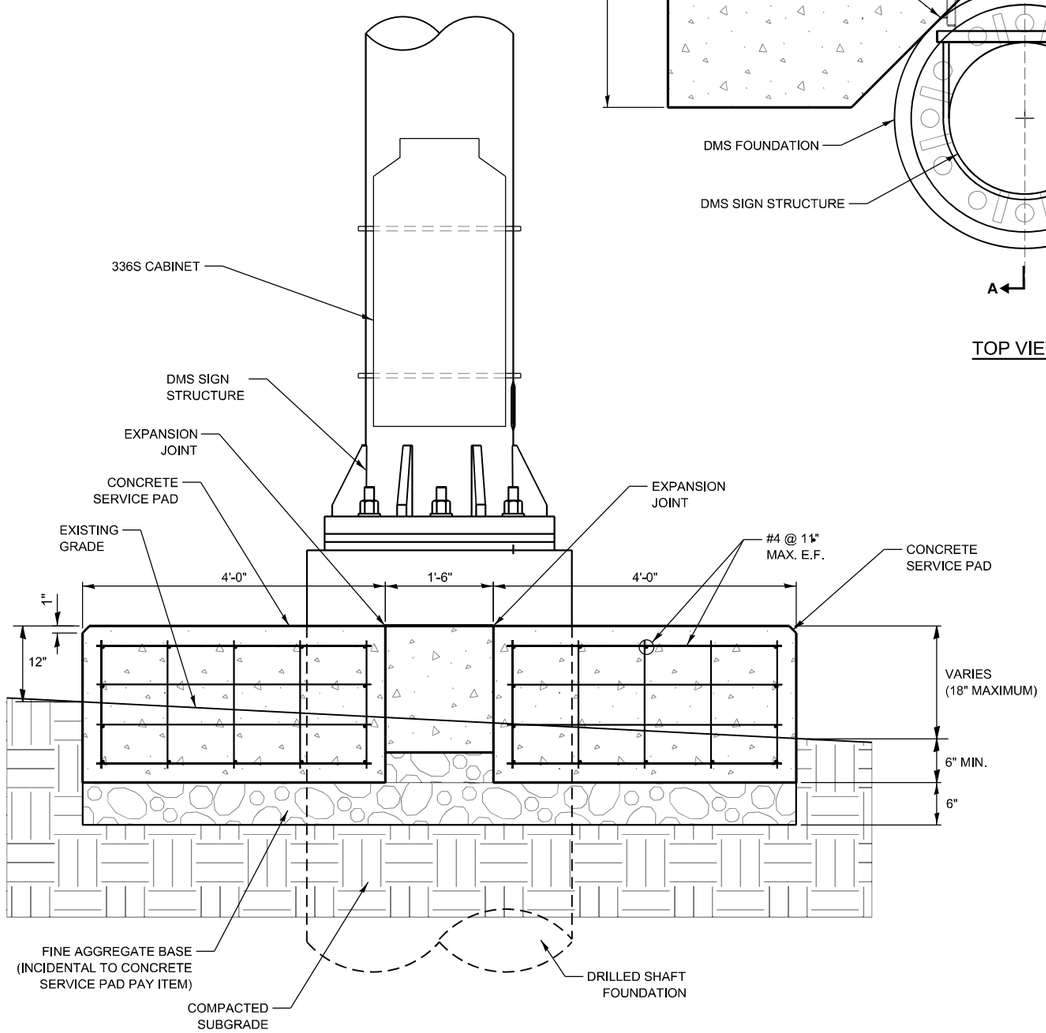


SECTION B-B

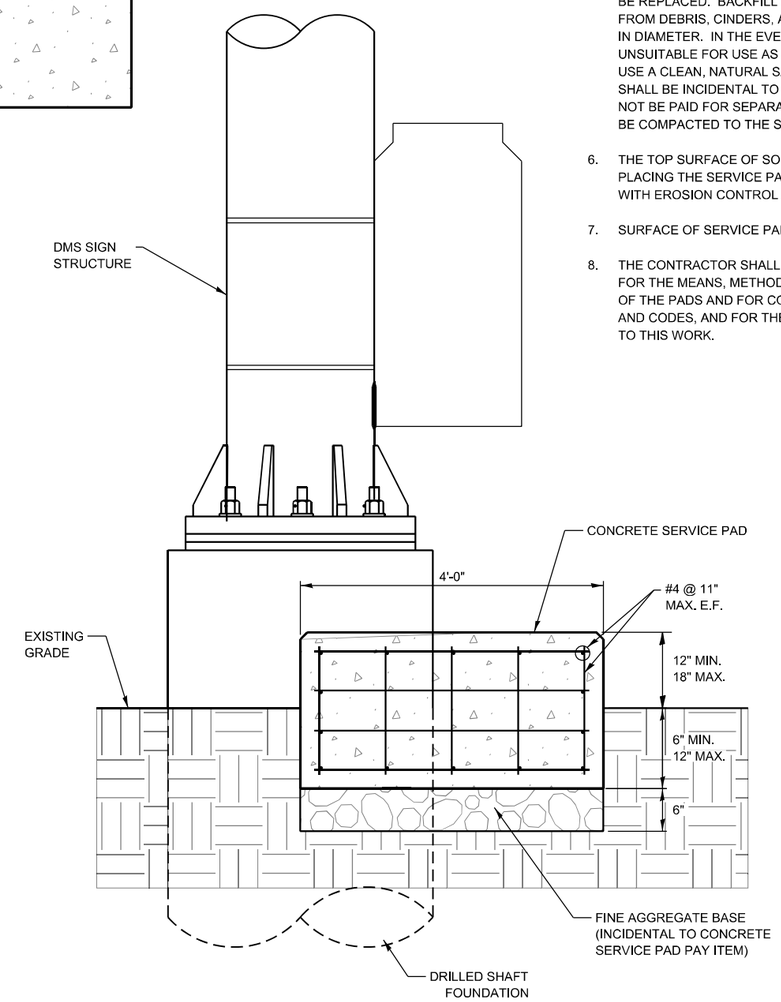


SECTION A-A

CONCRETE SERVICE PAD DETAILS

NOTES:

1. SERVICE PADS SHALL BE INSTALLED ON SLOPES EQUAL TO OR LESS THAN 1:3.
2. ALL EXPOSED CONCRETE EDGES SHALL HAVE A 1" MINIMUM CHAMFER.
3. CONTRACTOR SHALL TAKE PRECAUTIONS TO STABILIZE EXISTING DMS STRUCTURE AND FOUNDATIONS WHILE EXCAVATING SOIL FOR INSTALLATION OF CONCRETE SERVICE PADS.
4. COMPACTED SOIL SHALL BE PLACED TO BE LEVEL WITH THE SERVICE PAD. CONTRACTOR MAY USE EXCAVATED SOIL FROM PLACING THE PAD'S AGGREGATE BASE FOR GRADING PURPOSES WITH APPROVAL OF THE ENGINEER.
5. SOIL EXCAVATED FOR THE PURPOSE OF MAINTAINING A STABLE WORKING SLOPE WHILE INSTALLING THE SERVICE PAD SHALL BE REPLACED. BACKFILL SHALL BE EARTH WHICH IS FREE FROM DEBRIS, CINDERS, AND ROCKS MEASURING 2" OR GREATER IN DIAMETER. IN THE EVENT THAT EXCAVATED MATERIAL IS UNSUITABLE FOR USE AS BACKFILL, THE CONTRACTOR SHALL USE A CLEAN, NATURAL SAND. THIS SUBSTITUTE BACKFILL SHALL BE INCIDENTAL TO THE SERVICE PAD INSTALLATION AND WILL NOT BE PAID FOR SEPARATELY. ALL BACKFILL MATERIALS SHALL BE COMPACTED TO THE SATISFACTION OF THE ENGINEER.
6. THE TOP SURFACE OF SOIL DISTURBED BY EXCAVATION FOR PLACING THE SERVICE PADS SHALL BE SEEDED AND PROTECTED WITH EROSION CONTROL MEASURES.
7. SURFACE OF SERVICE PADS SHALL BE BROOM FINISHED.
8. THE CONTRACTOR SHALL RETAIN THE SOLE RESPONSIBILITY FOR THE MEANS, METHODS, AND TECHNIQUES OF CONSTRUCTION OF THE PADS AND FOR COMPLIANCE WITH LAWS, REGULATIONS, AND CODES, AND FOR THE SAFETY OF CONSTRUCTION APPLICABLE TO THIS WORK.

MODEL: Default
FILE NAME: pw:\\khpw.bentley.com:khpw01\Documents\01 Active Projects\IMW-CHS-168959100 - IL 64\Phase II\2 Design\CADD\Plan Sheets\Communications\West Corridor\108121-its-dms-dt01_KHA.dgn

Kimley»Horn
© 2022 KIMLEY-HORN AND ASSOCIATES, INC.
4001 KRAFT DRIVE, SUITE 160
WARREN, IL 61255
PHONE: 815-457-5550
WWW.KIMLEY-HORN.COM

| | | |
|---|---|---|
| USER NAME = | DESIGNED - | REVISED - |
| | DRAWN - | REVISED - |
| PLOT SCALE = | CHECKED - | REVISED - |
| PLOT DATE = | DATE - | REVISED - |

STATE OF ILLINOIS
DEPARTMENT OF TRANSPORTATION

DMS DETAILS
CONCRETE SERVICE PAD

SCALE: N.T.S. | SHEET OF SHEETS | STA. TO STA.

| F.A.P. RTE. | SECTION | COUNTY | TOTAL SHEETS | SHEET NO. |
|---|---|---|---|---|
| 307 | 2020-263-SUR,SW&TS | DUPAGE | 529 | 491 |
| | | CONTRACT NO. 62N33 | | |
| | | ILLINOIS | FED. AID PROJECT | |

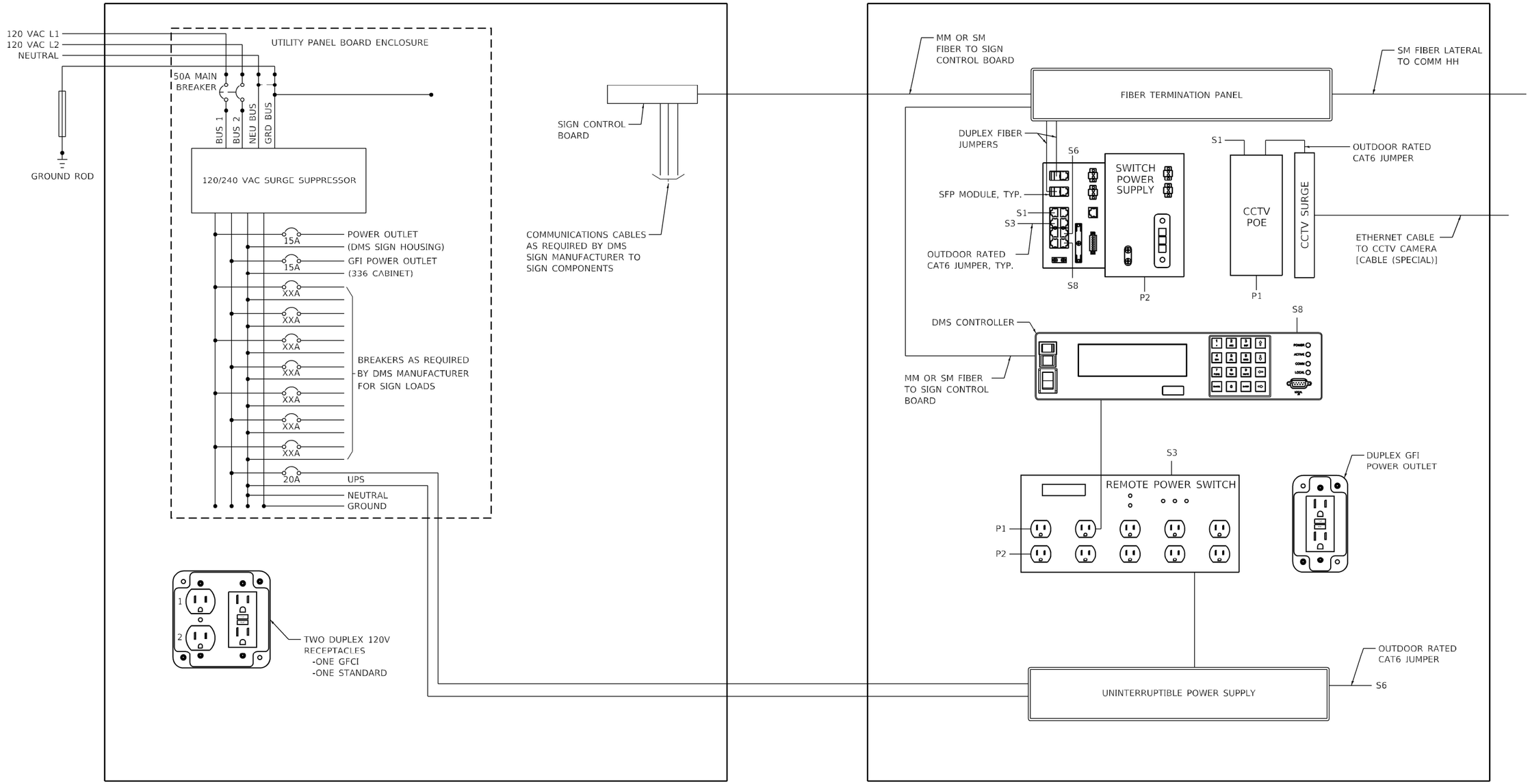


DMS HOUSING

336S CABINET

NOTES

1. DMS MANUFACTURER TO PROVIDE WIRING DIAGRAMS/SCHEMATICS FOR REVIEW AND APPROVAL BY THE ENGINEER PRIOR TO FABRICATION.
2. ENTIRE COMPLETED SYSTEM SHALL BE GROUNDED AND BONDED IN ACCORDANCE WITH THE APPLICABLE ARTICLES OF SECTION 250 OF THE NATIONAL ELECTRICAL CODE.
3. EQUIPMENT SHOWN IN ABOVE DRAWING REPRESENTS GENERIC EQUIPMENT. EQUIPMENT SUPPLIED BY THE DMS MANUFACTURER MAY DIFFER IN APPEARANCE.

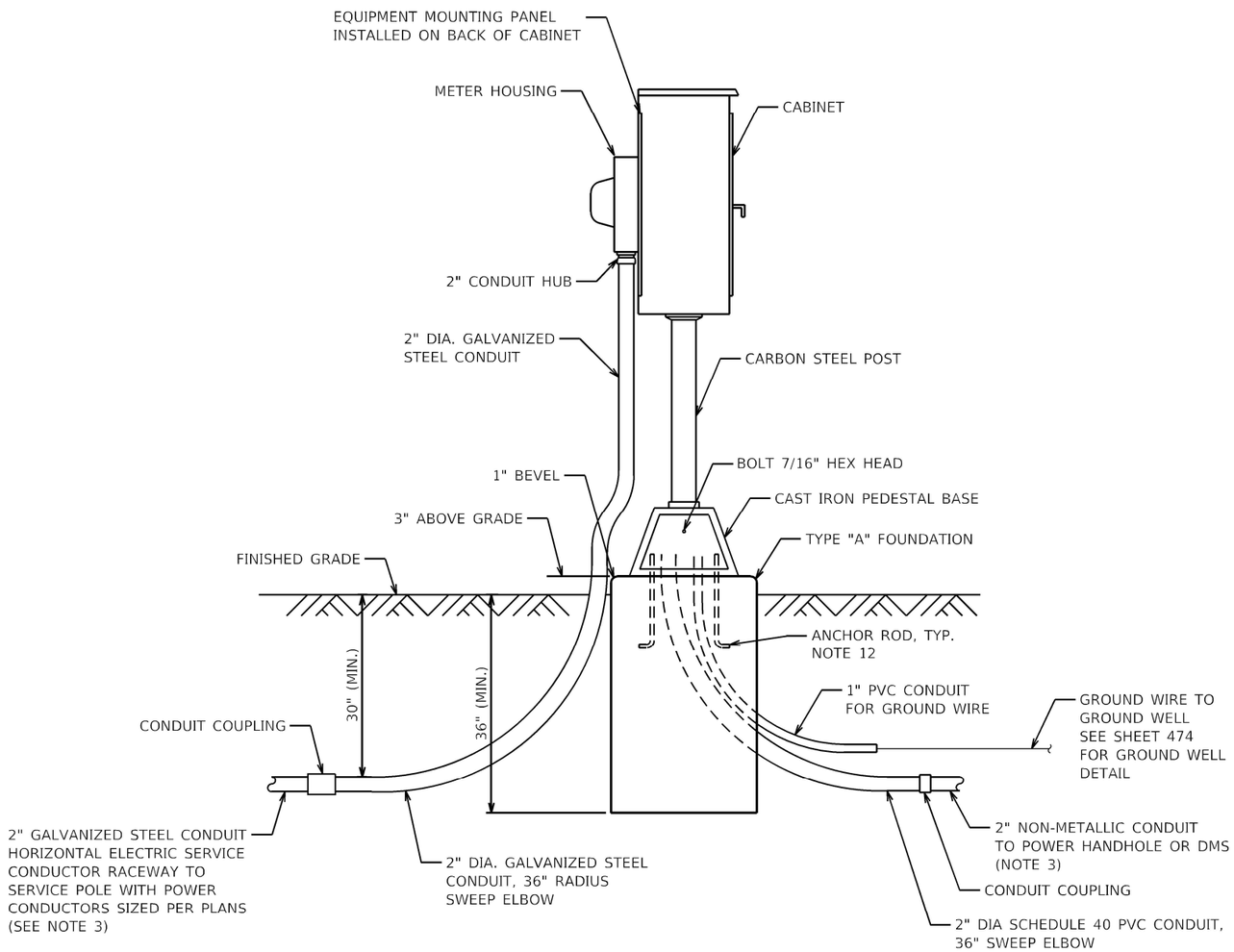


**SERVICE PEDESTAL WITH METER**

NOTES

1. SERVICE VOLTAGE SHALL BE AS INDICATED ELSEWHERE IN THE DRAWINGS.
2. UNLESS OTHERWISE INDICATED, ALL ITEMS AND WORK SHOWN SHALL BE INCLUDED AND PAID AS PART OF PAY ITEM 80400100 (ELECTRIC SERVICE INSTALLATION).
3. THE HORIZONTAL ELECTRIC SERVICE CONDUCTOR RACEWAY/CONDUCTORS AND NON-METALLIC CONDUIT TO POWER HANDHOLE SHALL BE MEASURED SEPARATELY FOR PAYMENT.
4. CABINETS, CABINET POSTS, AND CABINET PEDESTALS SHALL BE PRIMED AND PAINTED. THE EXTERIOR SHALL HAVE TWO EPOXY FINISH COATS OF ANSI-61 GRAY. THE INTERIOR SHALL BE PAINTED WHITE.
5. METER HOUSING SHALL BE MOUNTED TO BACK WALL OF CABINET.
6. CABLES FROM METER HOUSING SHALL PASS THROUGH BACK WALL OF CABINET.
7. METER HOUSING SHALL BE AS REQUIRED BY THE UTILITY.
8. THE CABINET SHALL BE 36"H X 20"W X 15"D, FABRICATED FROM ALUMINUM WITH A MINIMUM THICKNESS OF 0.125", RATED NEMA TYPE 3R AND HAVE A MOUNTING BACK PLATE.
9. THE CABINET DOOR SHALL HAVE A CONTINUOUS HINGE THAT IS BOLTED TO THE CABINET AND DOOR WITH 1/4-20 STAINLESS STEEL CARRIAGE BOLTS AND NY-LOCK NUTS. THE HINGE SHALL BE INSTALLED ON THE RIGHT SIDE WHEN FACING THE CABIENT AND BE MADE OF STAINLESS STEEL WITH A 0.25 INCH DIAMETER STAINLESS STEEL HINGE PIN. THE HINGE PIN SHALL BE CAPPED TOP AND BOTTOM BY WELD TO RENDER IT TAMPER-PROOF. THE CABINET SHALL HAVE A GASKET THAT FORMS A WEATHER-TIGHT SEAL BETWEEN THE CABINET AND DOOR. THE DOOR LATCHING MECHANISM SHALL BE A 3-POINT DRAW ROLLER TYPE. WHEN THE DOOR IS CLOSED AND LATCHED, IT WILL BE LOCKED. THE LATCHING HANDLE SHALL BE FABRICATED FROMA 0.75" STAINLESS STEEL ROUND BAR AND SHALL HAVE A PROVISION FOR PADLOCKING IN THE CLOSED POSITION.
10. THE ENCLOSURE SHALL BE EQUIPPED WITH TWO ADJUSTABLE "C" MOUNTING CHANNELS WELDED ON BOTH SIDE WALLS AND BACK WALL OF THE ENCLOSURE, ALLOWING VERSATILE POSITIONING OF SHELVES OR PANELS. MOUNTING CHANNELS SHALL BE FACTORY PAINTED SAME COLOR AS INTERIOR OF CABINET.
11. THE CABINET DOOR SHALL NOT HAVE COPARTMENT DOORS OR LOUVERS. INTERIOR OF CABIENT DOOR SHALL HAVE A PLASTIC POCKET FOR WIRING SCHEMATIC.
12. CONTRACTOR MUST COORDINATE WITH PEDESTAL BASE SUPPLIER AND FURNISH THE NECESSARY ANCHOR RODS.
13. THE ELECTRIC SERVICE EQUIPMENT ASSEMBLY SHALL BE ASSEMBLED BY A UL 508A INDUSTRIAL CONTROL PANEL FABRICATOR. THE PANEL ASSEMBLY SHALL BE UL LABELED AND SUITABLE FOR USE AS SERVICE EQUIPMENT.
14. ALL EQUIPMENT SHALL BE GROUNDED AND BONDED IN ACCORDANCE WITH THE NATIONAL ELECTRICAL CODE AND THE NATIONAL ELECTRICAL SAFETY CODE.
15. SEE STANDARD BE-220, ELECTRIC SERVICE INSTALLATION AERIAL, REMOTE DISCONNECT FOR REQUIREMENTS AT UTILITY POLE.
16. PLANS AND DETAILS INDICATE THE GENERAL NATURE AND REQUIREMENTS. THEY DO NOT SHOW EVERY ACCESORY AND ATTACHMENT, AND THEY DO NOT RELIEVE THE CONTRACTOR OF THE REQUIREMENTS OF THE SPECIFICATIONS AND SPECIAL PROVISIONS TO ASCERTAIN UTILITY REQUIREMENTS AND TO COORDINATE ACCORDINGLY. FURNISHING ALL ITEMS AND WORK NOT PROVIDED BY THE UTILITY, BUT NECESSARY FOR A COMPLETE SERVICE INSTALLATION IS REQUIRED AND SHALL BE INCLUDED IN PAY ITEM 80400100 (ELECTRIC SERVICE INSTALLATION).


MODEL: Default
FILE NAME: pw:\\sh-pw.bentley.com:sh-pw-01\Documents\01 Active Projects\HW-CHS-168959100 - IL 64\Phase III\2 Design\CADD\Plan Sheets\ITS&Sub-DMS\West Corridor\D108121-dp-dmsdetail04_TSM.dgn

TranSmart
100 S. Wacker Drive Suite 400
Chicago, Illinois 60606

| | | | |
|---|---|---|---|
| USER NAME = dmeier | DESIGNED - DJM | REVISED - | |
| | DRAWN - JNR | REVISED - | |
| PLOT SCALE = 2.0000 ' / in. | CHECKED - REL | REVISED - | |
| PLOT DATE = 1/24/2025 | DATE - | REVISED - | |

STATE OF ILLINOIS
DEPARTMENT OF TRANSPORTATION

DEVICE DETAILS
TYPICAL DMS SERVICE METER PEDESTAL

SCALE: N.T.S. | SHEET 5 OF 6 SHEETS | STA. N/A | TO STA. N/A

| F.A.P. RTE. | SECTION | COUNTY | TOTAL SHEETS | SHEET NO. |
|---|---|---|---|---|
| 307 | 2020-263-SUR,SW&TS | DUPAGE | 529 | 493 |
| | | CONTRACT NO. 62N33 | | |
| | | ILLINOIS | FED. AID PROJECT | |

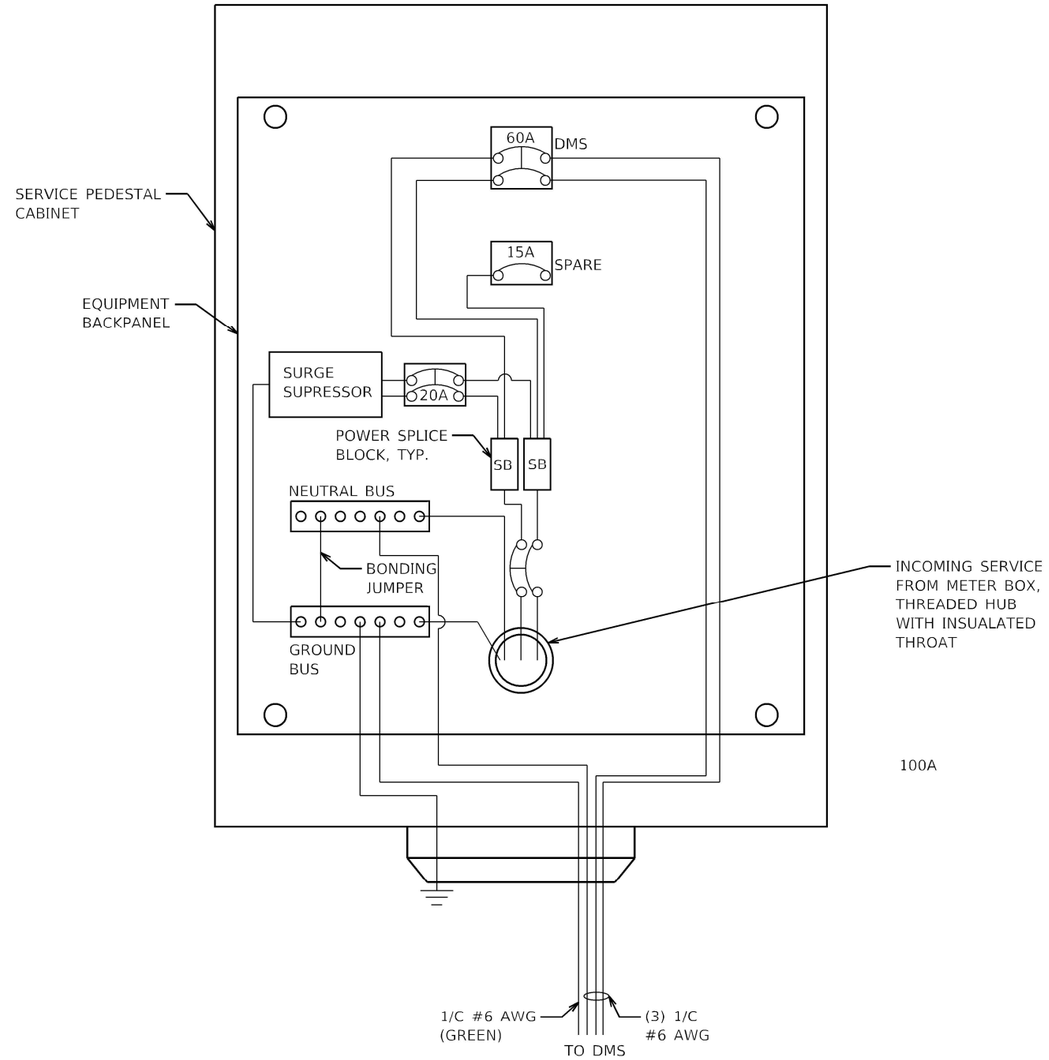


**SERVICE PEDESTAL CABINET WIRING**

NOTES

1. THE ELECTRIC SERVICE EQUIPMENT ASSEMBLY SHALL BE UL LABELED, SUITABLE FOR USE AS SERVICE EQUIPMENT.

2. CIRCUIT BREAKERS SHALL BE THERMAL MAGNETIC BOLT-ON TYPE WITH A MINIMUM INTERRUPTING CAPACITY OF 65,000 SYMETRICAL AMPERES RATED AT 240 VOLTS LINE TO LINE SERVICE OR 14,000 AT 480V RATED LINE TO LINE SERVICE. THEY SHALL BE LOCKABLE IN THE "OFF" POSITION FOR COMPLIANCE WITH OSHA LOCK-OUT/TAG-OUT REQUIREMENTS. HANDLES SHALL BE TRIP FREE.

3. THE SURGE PROTECTOR SHALL BE SUITABLE FOR THE INCOMING SINGLE PHASE 60HZ AC ELECTRICAL SERVICE, WITH A SURGE CURRENT RATING OF 50,00 AMPS OR BETTER, RATED -40 TO 65 DEGREES C., WITH LED OPERATING IDICATORS, AND SHALL BE UL LISTED PER UL 1449. SURGE PROTECTOR SHALL BE WIRED FOR THE INCOMING SERVICE VOLTAGE. FOLLOW MANUFACTURER RECOMMENDED WIRING SPECIFICATIONS.

4. BUS BARS, CONNECTORS AND LUGS SHALL BE COPPER, INSULATED AND ISOLATED AND CONFIGURED TO PREVENT SHORTED CONDITIONS FROM TIGHTENING TERMINATIONS, ETC. THE OVERALL BUS SECTION SHALL BE CONFIGURED BEHIND AN INSULATING BARRIER SHIELD WHICH IS REMOVABLE FOR ACCESS TO CONNECTIONS.

5. EQUIPMENT IN DIAGRAMS ABOVE ARE NOT TO SCALE AND WIRING IS DIAGRAMMATIC. CONTRACTOR TO SUBMIT WIRING DIAGRAM AND EQUIPMENT LAYOUT FOR APPROVAL BY THE ENGINEER.

6. A PLASTIC LAMINATED CABINET LAYOUT DIAGRAM, CIRCUIT SCHEMATIC, AND BILL OF MATERIALS WITH CATALOG NUMBERS USED SHALL BE AFFIXED TO THE INTERIOR SIDE OF THE ENCLOSURE DOOR.

7. A 2-COLOR ENGRAVED PLASTIC NAMEPLATE, ATTACHED WITH SCREWS, AND ENGRAVED AS INDICATED, SHALL BE PROVIDED FOR EACH BREAKER.

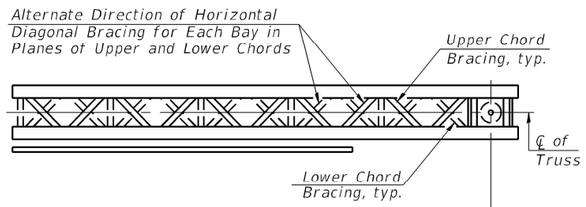


## TYPICAL PLAN

(Walkway not shown)

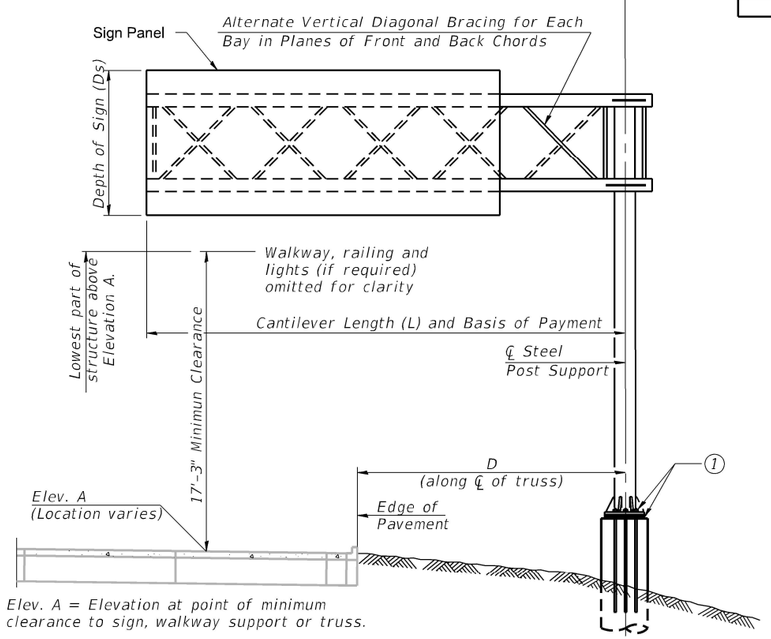


Elev. A = Elevation at point of minimum clearance to sign, walkway support or truss.

## TYPICAL ELEVATION

Looking in Direction of Traffic

Sign support structures may be subject to damaging vibrations and oscillations when sign panels are not in place during erection or maintenance of the structure. To avoid these vibrations and oscillations, consideration should be given to attaching temporary blank sign panels to the structure.

| Structure Number | Station | Design Truss Type | Cantilever Length (L) | Elev. A | Dim. D | Ds | Total Sign Area |
|---|---|---|---|---|---|---|---|
| 1C022S064L000.0-003 | 1643+08 | III-C-A | 40'-0" | 727.80 | 8'-8" | 6'-0" | 120 Sq. Ft. |
| 1C022S064R000.0-001 | 1601+71 | III-C-A | 40'-0" | 708.00 | 7'-1" | 6'-0" | 120 Sq. Ft. |
| | | | | | | | |
| | | | | | | | |
| | | | | | | | |
| | | | | | | | |
| | | | | | | | |
| | | | | | | | |
| | | | | | | | |
| | | | | | | | |
| | | | | | | | |
| | | | | | | | |

| Truss Type | Maximum Sign Area | Maximum Length |
|---|---|---|
| I-C-A | 170 Sq. Ft. | 25 Ft. |
| II-C-A | 340 Sq. Ft. | 30 Ft. |
| III-C-A | 400 Sq. Ft. | 40 Ft. |

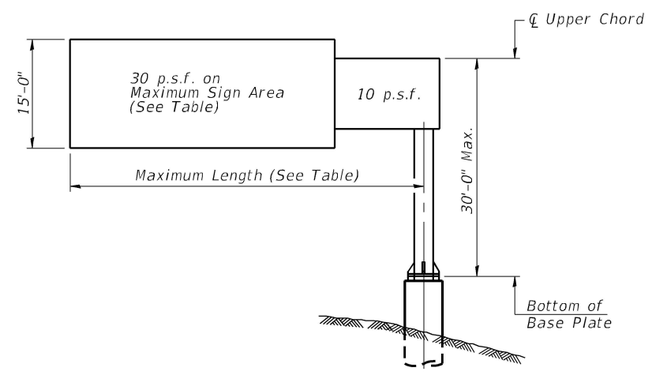


## DESIGN WIND LOADING DIAGRAM

Parameters shown are basis for I.D.O.T. Standards Installations not within dimensional limits shown require special analysis for all components.

Note:
Trusses shall be shipped individually with adequate provision to prevent detrimental motion during transport. This may require ropes between horizontals and diagonals or energy dissipating (elastic) ties to the vehicle. The contractor is responsible for maintaining the configuration and protection of the trusses.

(1) After adjustments to level truss and insure adequate vertical clearance, all top and leveling nuts shall be tightened against the base plate with a minimum torque of 200 lb.-ft. Stainless steel mesh shall then be placed around the perimeter of the base plate. Secure to base plate with stainless steel banding.

* If M270 Gr. 50W (M222) steel is proposed, chemistry for plate to be used shall first be approved by the Engineer as suitable for galvanizing and welding.

## GENERAL NOTES

DESIGN: AASHTO Standard Specifications for Structural Supports for Highway Signs, Luminaires and Traffic Signals. ("AASHTO Specifications")

CONSTRUCTION: Current (at time of letting) Illinois Department of Transportation Standard Specifications for Road and Bridge Construction, Supplemental Specifications and Special Provisions. ("Standard Specifications")

LOADING: 90 M.P.H. WIND VELOCITY

WALKWAY LOADING: Dead load plus 500 lbs. concentrated live load.

DESIGN STRESSES:
Field Units
f'c = 3,500 p.s.i.
fy = 60,000 p.s.i. (reinforcement)

WELDING: All welds to be continuous unless otherwise shown. All welding to be done in accordance with current AWS D1.1 and D1.2 Structural Welding Codes (Steel and Aluminum) and the Standard Specificiations.

MATERIALS: Aluminum Alloys as shown throughout plans. All Structural Steel Pipe shall be ASTM A53 Grade B or A500 Grade B or C. If A500 pipe is substituted for A53, then the outside diameter shall be as detailed and wall thickness greater than or equal to A53.
All Structural Steel Plates and Shapes shall conform to AASHTO M270 Gr. 36, Gr. 50 or Gr. 50W*. Stainless steel for shims, sleeves and handhole covers shall be ASTM A240, Type 302 or 304, or another alloy suitable for exterior exposure and acceptable to the Engineer.
The steel pipe and stiffening ribs at the base plate for the column shall have a minimum longitudinal Charpy V-Notch (CVN) energy of 15 lb.-ft. at 40° F. (Zone 2) before galvanizing.

FASTENERS FOR ALUMINUM TRUSSES: All bolts noted as "high strength" must satisfy the requirements of AASHTO M164 (ASTM A325), or approved alternate, and must have matching lock nuts. Threaded studs for splices (if Members interfere) must satisfy the requirements of ASTM A449, ASTM A193, Grade B7, or approved alternate, and must have matching lock nuts. Bolts and lock nuts not required to be high strength must satisfy the requirements of ASTM A307. All bolts and lock nuts must be hot dip galvanized per AASHTO M232. The lock nuts must have nylon or steel inserts. A stainless steel flat washer conforming to ASTM A240 Type 302 or 304, is required under both head and nut or under both nuts where threaded studs are used. High strength bolt installation shall conform to Article 505.04 (f) (2)d of the IDOT Standard Specifications for Road and Bridge Construction. Rotational capacity ("ROCAP") testing of bolts will not be required.

U-BOLTS AND EYEBOLTS: U-Bolts and Eyebolts must be produced from ASTM A276 Type 304, 304L, 316 or 316L, Condition A, cold finished stainless steel, or an equivalent material acceptable to the Engineer. All nuts for U-Bolts and Eyebolts must be lock nuts equivalent to ASTM A307 with nylon or steel inserts and hot dip galvanized per AASHTO M232. A stainless steel flat washer conforming to ASTM A240, Type 302 or 304, is required under each U-Bolt and Eyebolt lock nut.

GALVANIZING: All Steel Grating, Plates, Shapes and Pipe shall be Hot Dip Galvanized after fabrication in accordance with AASHTO M111. Painting is not permitted.

ANCHOR RODS: Shall conform to ASTM F1554 Gr. 105.

CONCRETE SURFACES: All concrete surfaces above an elevation 6" below the lowest final ground line at each foundation shall be cleaned and coated with Concrete Sealer in accordance with the Standard Specifications.

REINFORCEMENT BARS: Reinforcement Bars designated (E) shall be epoxy coated in accordance with the Standard Specifications.

FOUNDATIONS: The contract unit price for Drilled Shaft Concrete Foundations shall include reinforcement bars complete in place.

## TOTAL BILL OF MATERIAL

| ITEM | UNIT | TOTAL |
|---|---|---|
| OVERHEAD SIGN STRUCTURE CANTILEVER TYPE I-C-A | Foot | |
| OVERHEAD SIGN STRUCTURE CANTILEVER TYPE II-C-A | Foot | |
| OVERHEAD SIGN STRUCTURE CANTILEVER TYPE III-C-A | Foot | 80 |
| OVERHEAD SIGN STRUCTURE WALKWAY, TYPE A | Foot | |
| | | |
| | | |
| DRILLED SHAFT CONCRETE FOUNDATIONS | Cu. Yds. | 25.0 |

OSC-A-1 5-15-2023

TranSmart
100 S. Wacker Drive Suite 400
Chicago, Illinois 60606

| | | |
|---|---|---|
| USER NAME = dmeier | DESIGNED - ZC | REVISED - |
| | DRAWN - JDK | REVISED - |
| PLOT SCALE = 2.0000 ' / in. | CHECKED - AS | REVISED - |
| PLOT DATE = 1/24/2025 | DATE - | REVISED - |

STATE OF ILLINOIS
DEPARTMENT OF TRANSPORTATION

CANTILEVER SIGN STRUCTURE-GENERAL PLAN & ELEVATION
IL 64 (NORTH AVE) SMART CORRIDOR

SCALE: N.T.S. | SHEET 1 OF 6 SHEETS | STA. N/A TO STA. N/A

| F.A.P. RTE. | SECTION | COUNTY | TOTAL SHEETS | SHEET NO. |
|---|---|---|---|---|
| 307 | 2020-263-SUR,SW&TS | DUPAGE | 529 | 495 |

CONTRACT NO. 62N33
ILLINOIS FED. AID PROJECT

MODEL: Default
FILE NAME: pw:\\sh-pw.bentley.com:sh-pw4\Documents\01 Active Projects\MV-CHS-68959100 - IL 64\Phase II\2 Design\CAD\Plan Sheets\ITS&Lighting\DMS\West Corridor\D108121-sht-str01 TSM.dgn

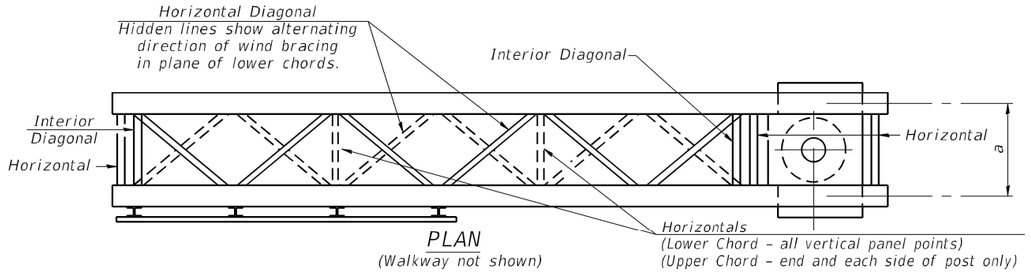


PLAN
(Walkway not shown)

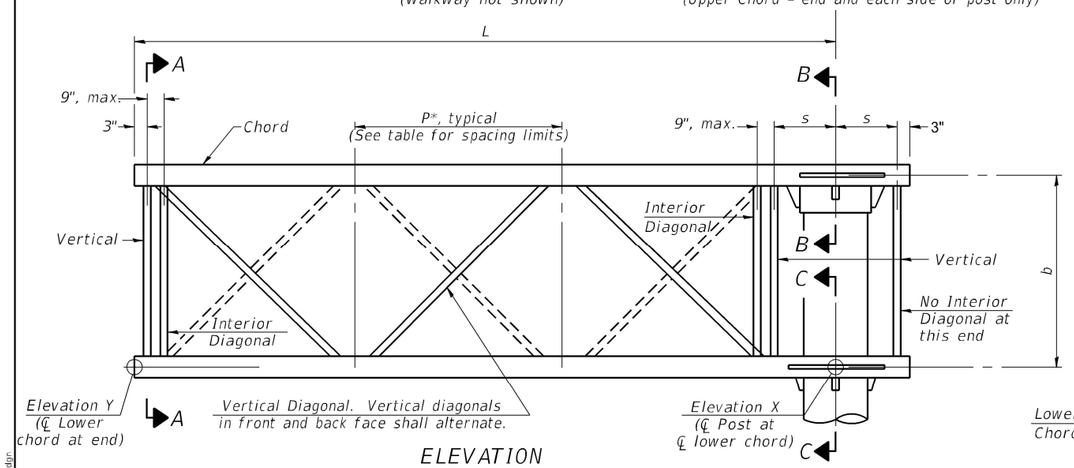


ELEVATION
(Sign and walkway omitted for clarity)

TYPICAL TRUSS UNIT
For Section B-B and Section C-C, see Base Sheet OSC-A-3.

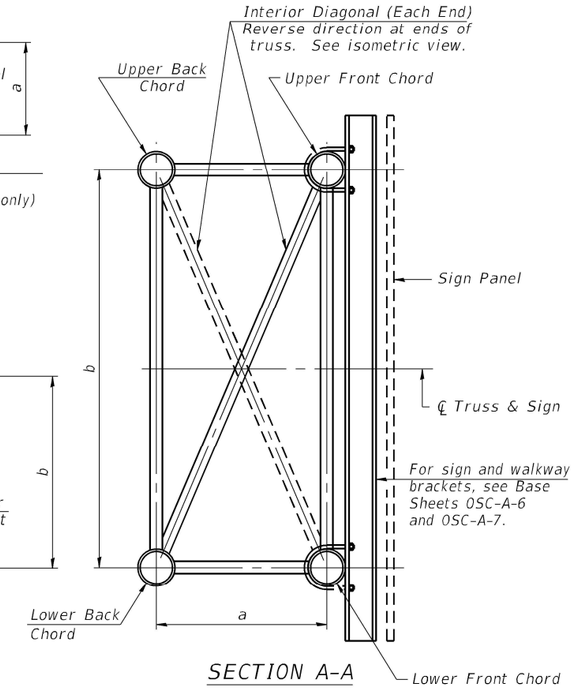


SECTION A-A

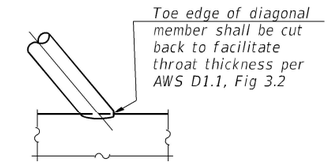


DETAIL A

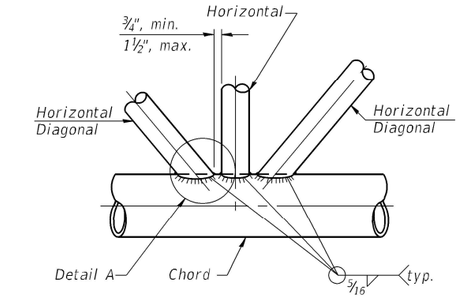


TRUSS INTERIOR JOINT DETAIL

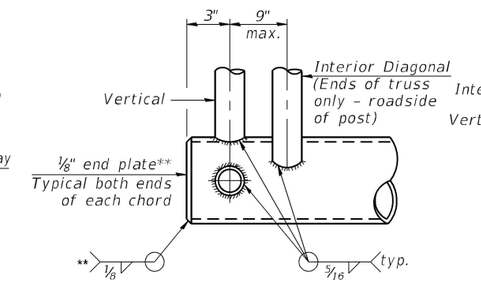


CANTILEVER END JOINT DETAIL

** Contractor may alternatively use standard aluminum drive-fit cap to close ends. ½" Ø Drain hole in end plate / drive-fit cap.

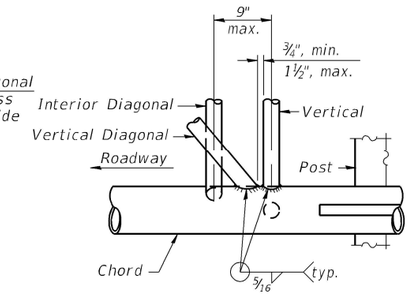


POST END JOINT DETAIL

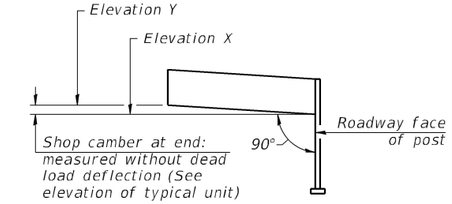


CAMBER DIAGRAM
(For Fabrication Only)

Note:
There are twice as many horizontal diagonals as there are vertical diagonals.

TRUSS UNIT TABLE

| Truss Type | Dimension "a" | Dimension "b" | Dimension "s" | Limits for Panel Spacing (P)* | Up. & Low. Chord O.D. | Up. & Low. Chord Wall | Verticals; Horizontals; Vertical, Horizontal, and Interior Diagonals O.D. | Verticals; Horizontals; Vertical, Horizontal, and Interior Diagonals Wall |
|---|---|---|---|---|---|---|---|---|
| I-C-A | 24" | 54" | 16" | 36" min. to 48" max. | 5" | 5/16" | 2½" | 5/16" |
| II-C-A | 36" | 66" | 21" | 42" min. to 54" max. | 6½" | 5/16" | 3¼" | 5/16" |
| III C A (35' Max.) | 36" | 84" | 21" | 48" min. to 66" max. | 7" | ⅜" | 3½" | ⅜" |
| III-C-A (>35' to 40') | 36" | 84" | 21" | 48" min. to 66" max. | 8" | ⅜" | 3½" | ⅜" |

$$*P = \frac{L-s-3''}{\#\ Panels}$$

| Structure Number | Station | Truss Type | Design Length (L) | Number of Panels Per Unit | Panel Length (P)* |
|---|---|---|---|---|---|
| 1C022S064L000.0-003 | 1643+08 | III-C-A | 40'-0" | 8 | 57" |
| 1C022S064R000.0-001 | 1601+71 | III-C-A | 40'-0" | 8 | 57" |

SHOP CAMBER TABLE

| Unit Length (L) | Shop Camber at End |
|---|---|
| 15' | 1½" |
| 16'-17' | 1¾" |
| 18'-20' | 2" |
| 21'-22' | 2¼" |
| 23'-25' | 2½" |
| 26'-27' | 2¾" |
| 28'-30' | 3" |
| 31'-32' | 3¼" |
| 33'-35' | 3½" |
| 36'-37' | 4" |
| 38'-40' | 4½" |

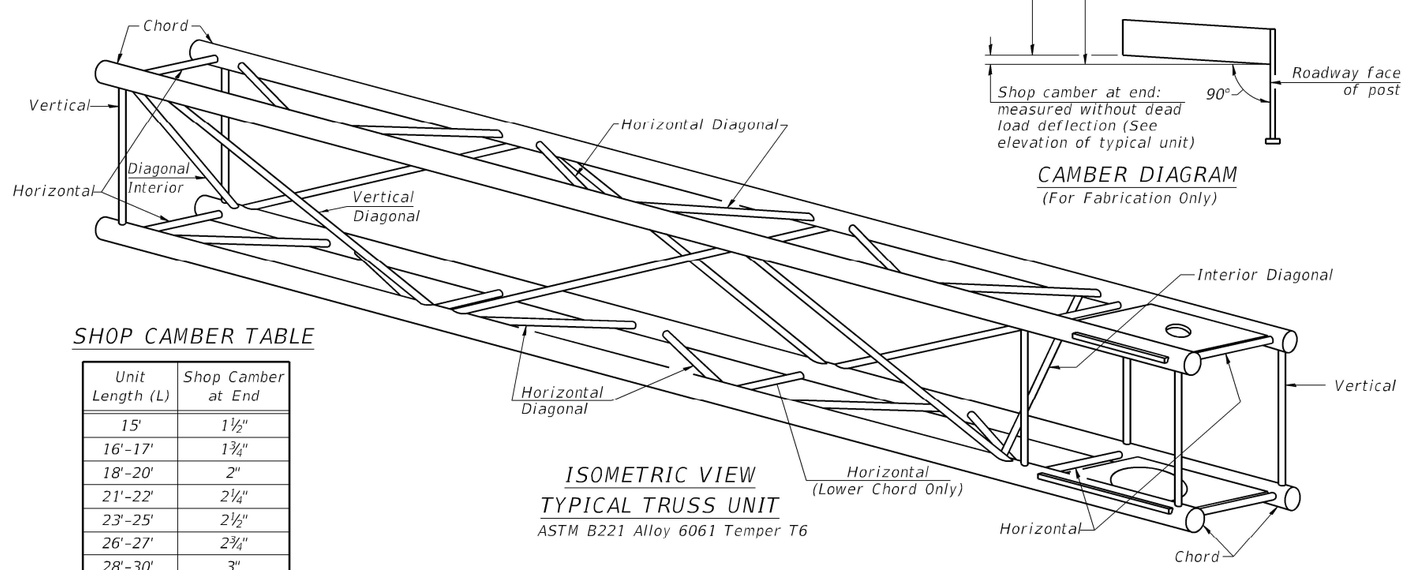


ISOMETRIC VIEW
TYPICAL TRUSS UNIT
ASTM B221 Alloy 6061 Temper T6

OSC-A-2 5-15-2023

MODEL: Default
FILE NAME: pw:\\ih-pw.bentley.com:ch-pw-01\Documents\01 Active Projects\HW-CHS-68959100 - IL 64\Phase II\2 Design\CAD\Plan Sheets\ITS&slash;DMS\West Corridor\D108121-st2-tr02 TSW.dgn

TranSmart
100 S. Wacker Drive Suite 400
Chicago, Illinois 60606

| | | |
|---|---|---|
| USER NAME = dmeier | DESIGNED - ZC | REVISED - |
| | DRAWN - JDK | REVISED - |
| PLOT SCALE = 2.0000 ' / in. | CHECKED - AS | REVISED - |
| PLOT DATE = 1/24/2025 | DATE - | REVISED - |

STATE OF ILLINOIS
DEPARTMENT OF TRANSPORTATION

CANTILEVER SIGN STRUCTURE-TRUSS DETAILS
IL 64 (NORTH AVE) SMART CORRIDOR

SCALE: N.T.S. | SHEET 2 OF 6 SHEETS | STA. N/A | TO STA. N/A

| F.A.P. RTE. | SECTION | COUNTY | TOTAL SHEETS | SHEET NO. |
|---|---|---|---|---|
| 307 | 2020-263-SUR,SW&TS | DUPAGE | 529 | 496 |

CONTRACT NO. 62N33
ILLINOIS FED. AID PROJECT

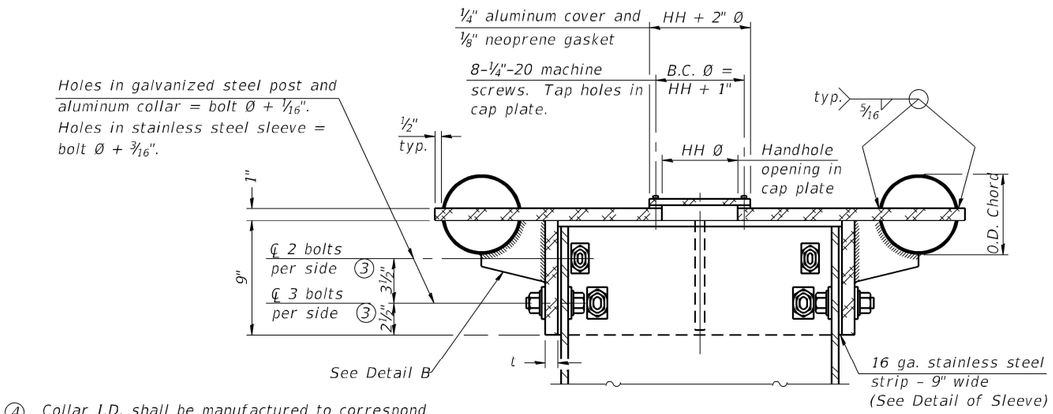


④ Collar I.D. shall be manufactured to correspond to O.D. of actual galvanized post and stainless steel sleeve plus ⅛" (±1/16"). Maximum gap between post and collar at any location equals ⅛" before tightening bolts.

## SECTION B-B

Bolts, washers (including contoured washers), and locknuts shall be stainless steel.

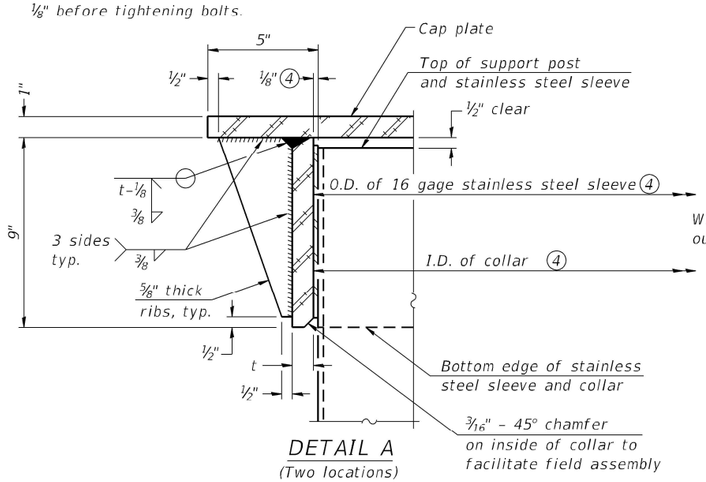


## DETAIL A

(Two locations)

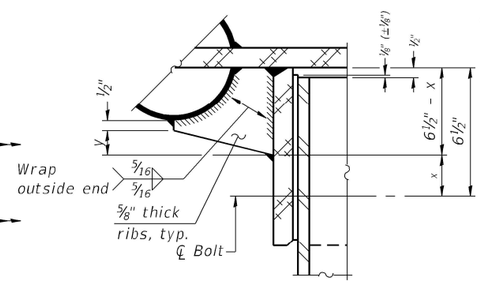


## DETAIL B

Two locations

(For details not shown, see Detail C)

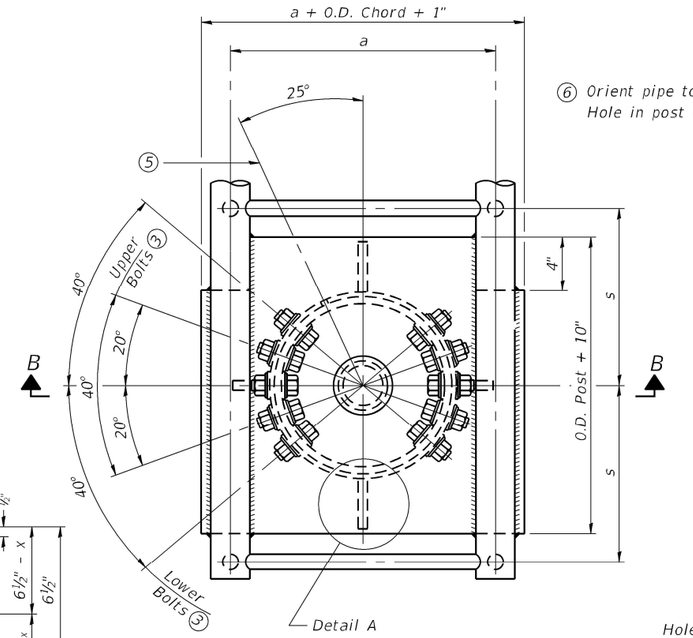


## PLAN VIEW - TOP OF COLUMN

⑤ Optional full penetration weld in collar. (Two locations maximum....(180° apart)....X-ray or UT 100%)

⑥ Orient pipe toward walkway side. Hole in post = O.D. pipe + ⅛".

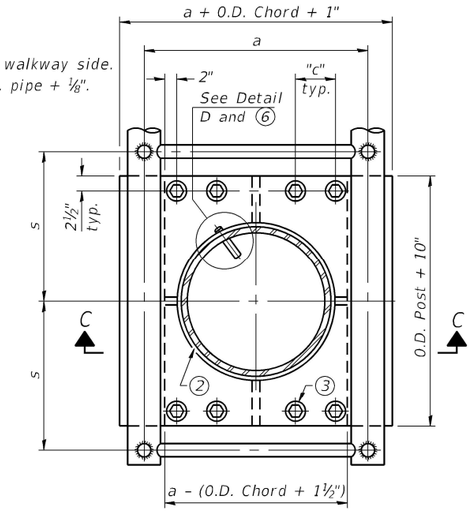


## SECTION THRU POST ABOVE LOWER CHORDS

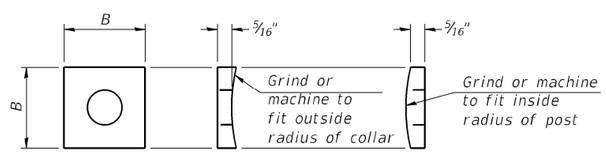


## CONTOURED WASHERS

| Bolt Size | Contoured Washers | |
|---|---|---|
| | Hole Dia. | B |
| ⅞" | 1" | 2½" |
| 1" | 1⅛" | 3" |
| 1¼" | 1⅜" | 3¼" |

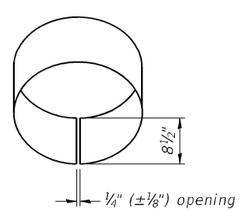


## DETAIL OF STAINLESS STEEL SLEEVE

Weld to post after galvanizing. (Prepare post surface to insure tight, uniform fit and allow welding.) Welds to be 1½" long at 6" cts. along top edge and at ¼" opening.

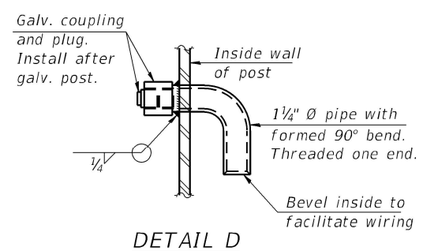


## DETAIL D

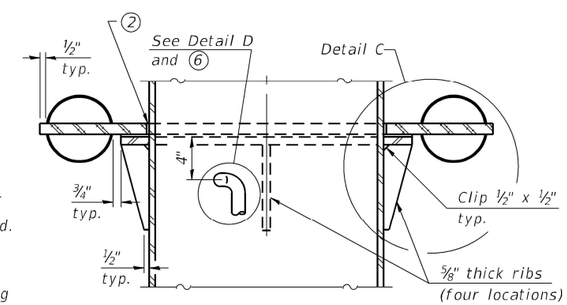


## SECTION C-C

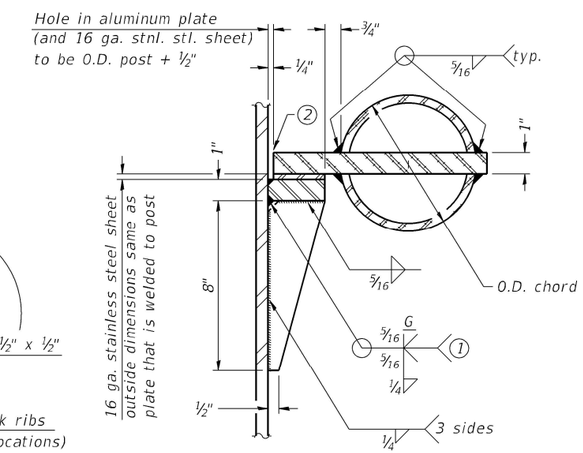


## DETAIL C

| Truss Type | Post Size | Upper & Lower Connection Bolt Diameter ③ | Lower Juncture Bolt Spacing Dimension "c" ③ | Opening in Cap Plate "HH" | Collar Thickness (t) | Side Ribs | |
|---|---|---|---|---|---|---|---|
| | | | | | | x | y |
| I-C-A | 16" Ø (83#/ ') | ⅞" | 3¼" | 8" | ⅝" | 1¾" | 2¼" |
| II-C-A | 24" Ø (125#/ ') | 1" | 3½" | 12" | ⅞" | 2" | 1¼" |
| III-C-A (35' max.) | 24" Ø (125#/ ') | 1¼" | 3½" | 12" | ⅞" | 2" | 1" |
| III-C-A (>35' to 40') | 24" Ø (171#/ ') | 1¼" | 3½" | 12" | ⅞" | 2" | 1" |

① Grind top if required to fully seat aluminum plate and stainless steel sheet.

② After tightening lower connection bolts, fill gap with non-hardening, silicone caulk suitable for exterior exposure and acceptable to the Engineer. Cost is included in Overhead Sign Structure Cantilever.

③ Upper and lower connection bolts in collar and bolts at lower chord connection shall be high strength with matching locknuts. Connection bolts shall have 2 stainless steel flat washers each.

OSC-A-3 5-15-2023

MODEL: Default
FILE NAME: pw:\\ih-pw.bentley.com:ih-pw-01\Documents\01 Active Projects\HWY-CHS-1689930 - IL 64\Phase III.2 Design\CAD\Plan Sheets\TS&SD\DMS\West Corridor\0108121-sd7-tr03 TSP.dgn

TranSmart
100 S. Wacker Drive Suite 400
Chicago, Illinois 60606

| | | | |
|---|---|---|---|
| USER NAME = dmeier | DESIGNED - ZC | REVISED - | |
| | DRAWN - JDK | REVISED - | |
| PLOT SCALE = 2.0000 ' / in. | CHECKED - AS | REVISED - | |
| PLOT DATE = 1/24/2025 | DATE - | REVISED - | |

STATE OF ILLINOIS
DEPARTMENT OF TRANSPORTATION

CANTILEVER SIGN STRUCTURES–JUNCTURE DETAILS
IL 64 (NORTH AVE) SMART CORRIDOR

SCALE: N.T.S. | SHEET 3 OF 6 SHEETS | STA. N/A | TO STA. N/A

| F.A.P. RTE. | SECTION | COUNTY | TOTAL SHEETS | SHEET NO. |
|---|---|---|---|---|
| 307 | 2020-263-SUR,SW&TS | DUPAGE | 529 | 497 |
| | | CONTRACT NO. 62N33 | | |
| | | ILLINOIS FED. AID PROJECT | | |

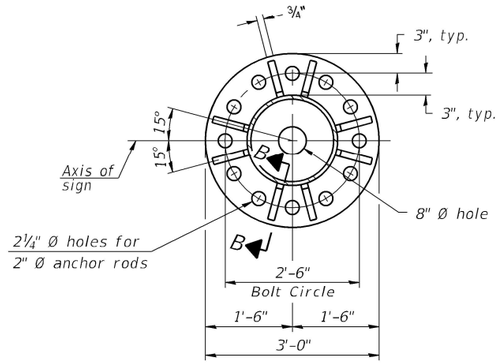


SECTION A-A

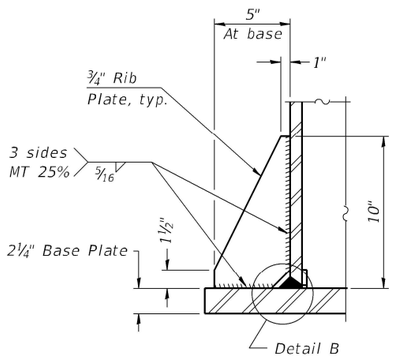


SECTION B-B

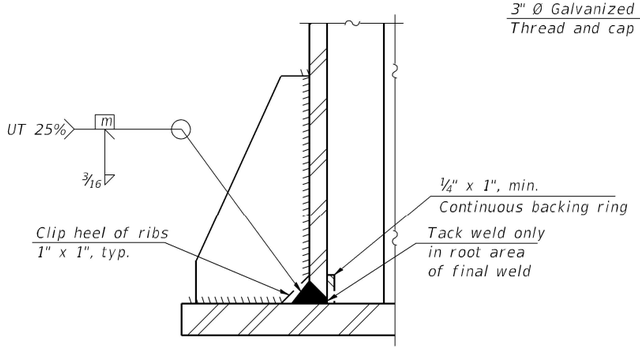


DETAIL B

(Typical rib)

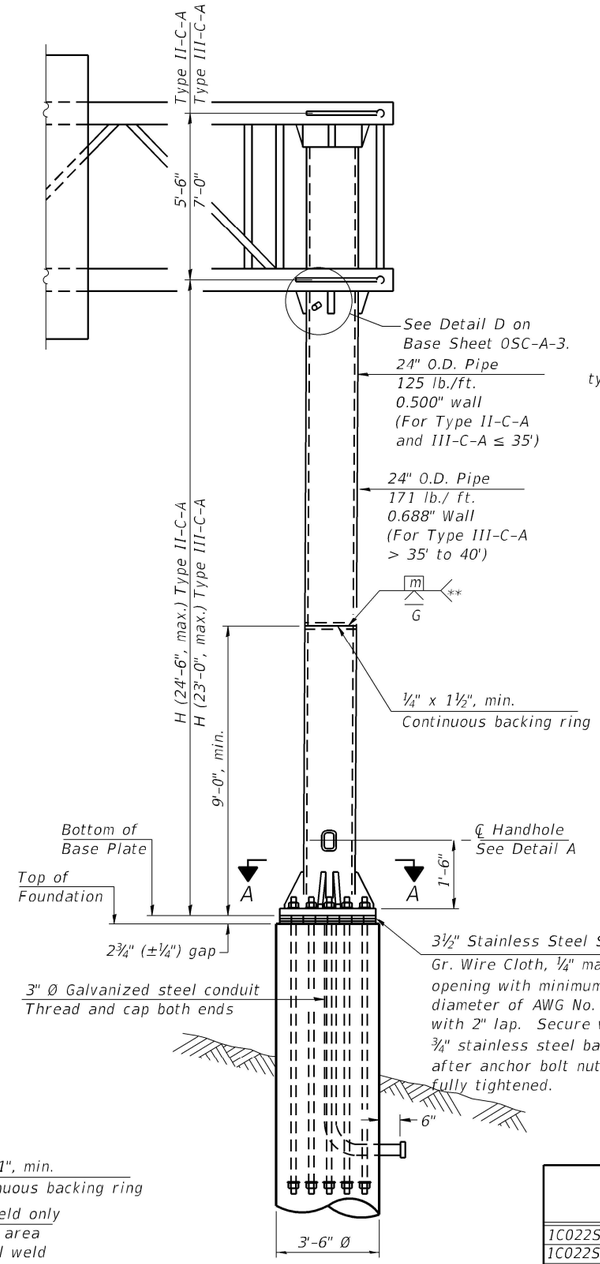


FRONT ELEVATION

For Foundation Details
see Base Sheet OSC-A-9.

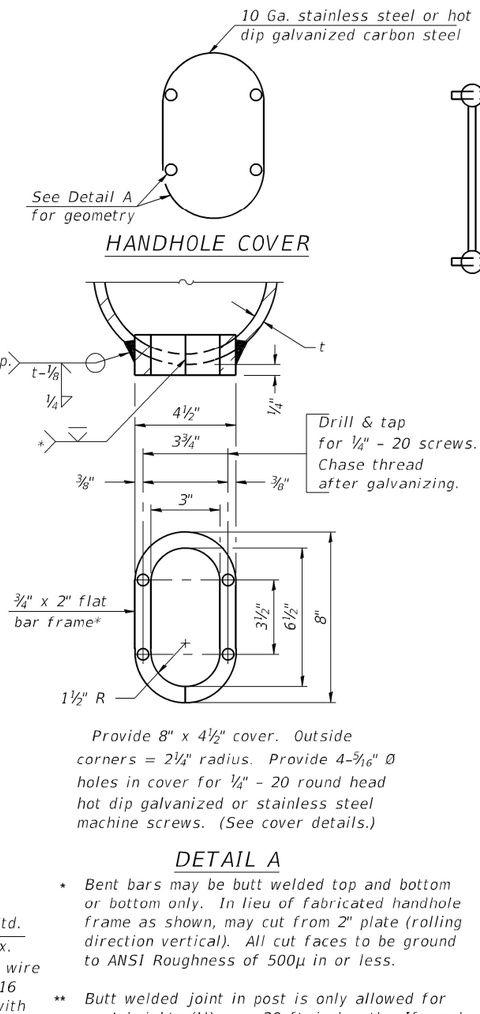


DETAIL A

* Bent bars may be butt welded top and bottom or bottom only. In lieu of fabricated handhole frame as shown, may cut from 2" plate (rolling direction vertical). All cut faces to be ground to ANSI Roughness of 500µ in or less.

** Butt welded joint in post is only allowed for post heights (H) over 20 ft. in length. If used, weld procedure must be preapproved by Engineer and joint shall receive 100% RT or UT (tension criteria) at Contractor's expense.

SIDE ELEVATION

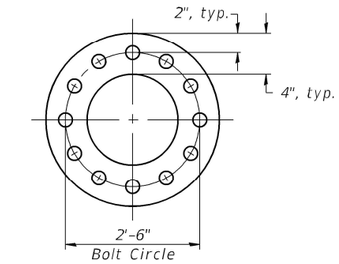


SUGGESTED POSITIONING PLATE

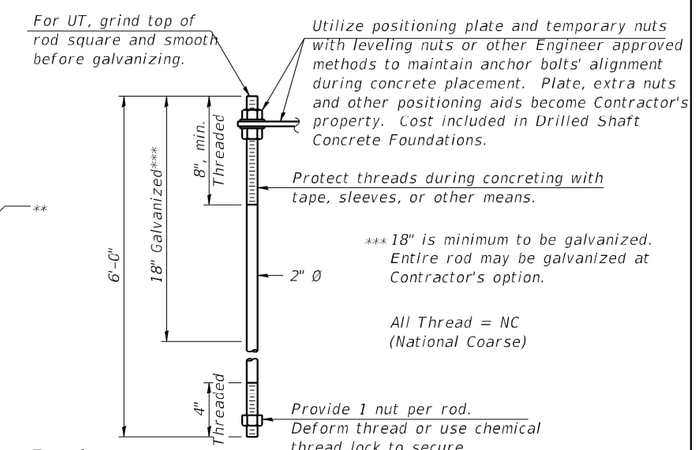


ANCHOR ROD DETAIL

Anchor rods shall conform to ASTM F1554 Grade 105. Galvanize the upper 18" (minimum***) and associated AASHTO M291, Grade A, C or DH heavy hex nuts and hardened washers per AASHTO M232. No welding shall be permitted on rods. Provide a nut at bottom, a hexagon locknut and washer above base plate and a leveling nut and washer below base plate. Nuts shall each be tightened with 200 lb.-ft. minimum torque against base plate. Before or after threading, but before galvanizing, each anchor rod shall be ultrasonically tested (UT) by a Level II or III inspector, qualified in accord with ANSI guidelines, to insure no rejectable flaws exist in the upper 18" (tension criteria). Cost of testing included in Drilled Shaft Concrete Foundations.

| Structure Number | Station | H |
|---|---|---|
| 1C022S064L000.0-003 | 1643+08 | 17'-0" |
| 1C022S064R000.0-001 | 1601+71 | 19'-0" |

Note: "H" based on 15'-0" or actual sign height, whichever is greater.

OSC-A-5 5-15-2023

* Grind anchor rod to bright finish at ground clamp location before installing clamp.

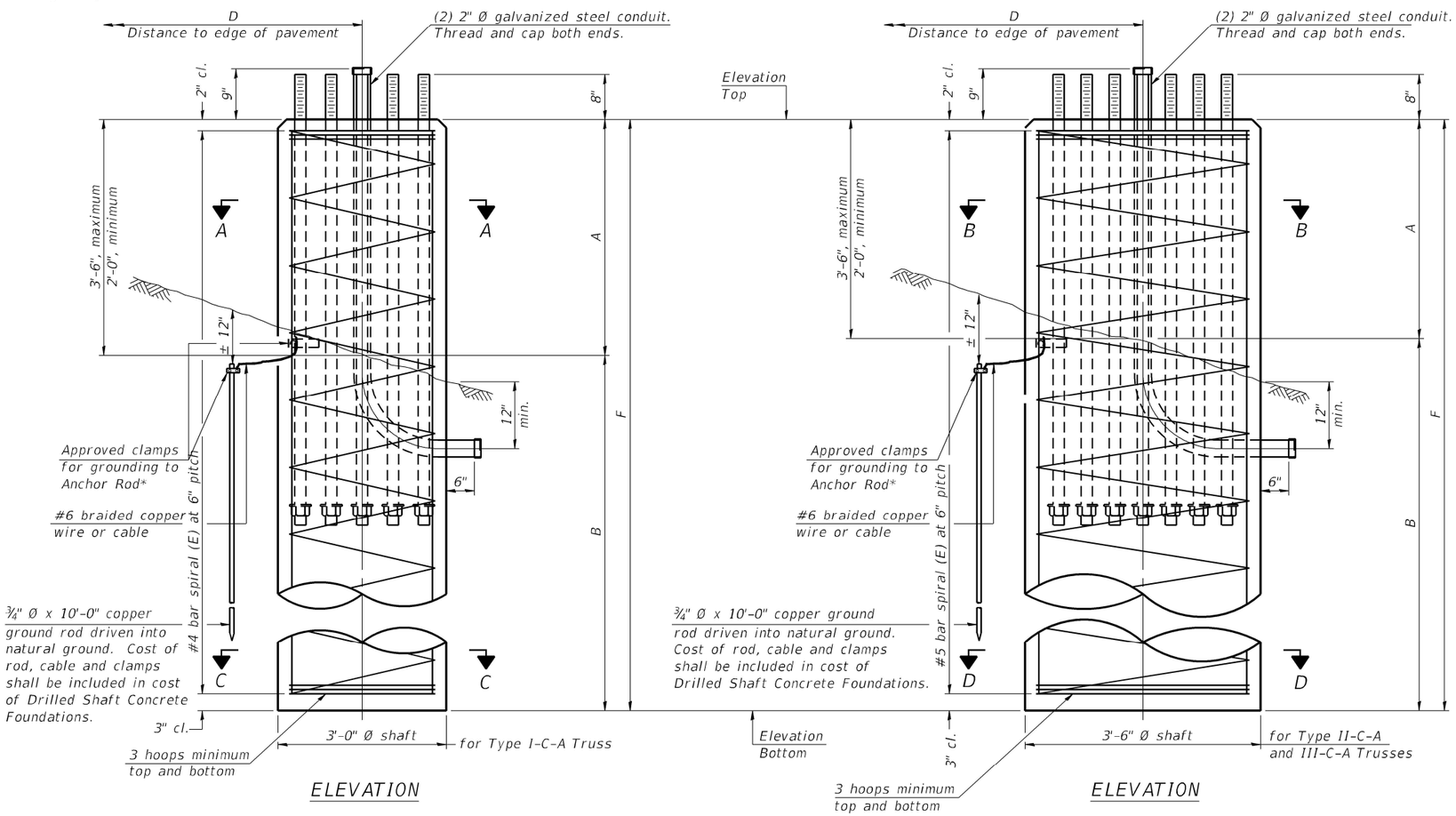


ELEVATION

ELEVATION

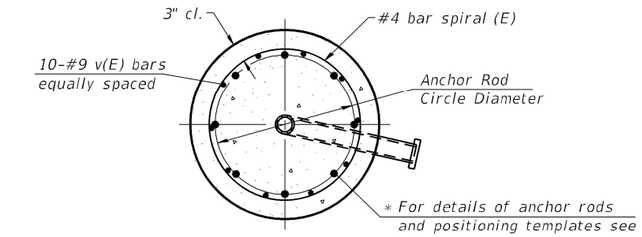


SECTION A-A
3'-0" Ø shaft

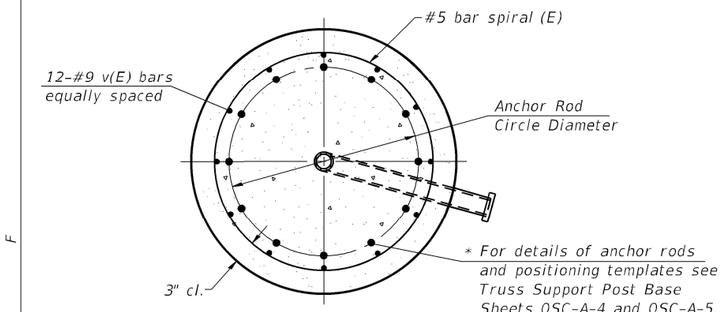


SECTION B-B
3'-6" Ø shaft

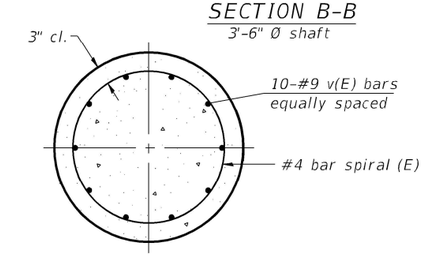


SECTION C-C
3'-0" Ø shaft

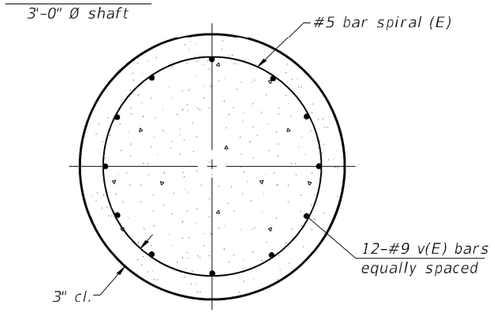


SECTION D-D
3'-6" Ø shaft

NOTES:

The foundation dimensions shown in the Foundation Design Table are based on the presence of mostly cohesive soils with an average Unconfined Compressive Strength (Qu) of at least 1.25 tsf, which must be determined by previous soil investigations at the jobsite. When other conditions are indicated, the boring data will be included in the plans and the foundation dimensions shown in the Foundation Data Table will be the result of site specific designs.

If the conditions encountered are different than those indicated, the Contractor shall notify the Engineer to determine if the foundation dimensions need to be modified. If dimensions "B" or "F" are revised by more than 12" by the Contractor, "as-built" plans shall be prepared and submitted to the District Bureau of Operations for future reference.

No sonotubes or decomposable forms shall be used below the lower conduit entrance. Permanent metal forms or other shielding may not be left in place below that elevation without the Engineer's written permission.

Concrete shall be placed monolithically, without construction joints.

Backfill shall be placed per Article 502 of Standard Specification and prior to erection of support column.

A normal surface finish followed by a Concrete Sealer application will be required on concrete surfaces above the lowest elevation 6" below finished ground line. Cost included in "Drilled Shaft Concrete Foundation".

FOUNDATION DESIGN TABLE

| Truss Type | Post Base Sheet | Maximum Cantilever Length (ft) | Maximum Total Sign Area (sq ft) | Shaft Diameter (in) | "B" Depth (ft) | Anchor Rods No. | Anchor Rods Diameter (in) | Anchor Rod Circle Diameter (in) |
|---|---|---|---|---|---|---|---|---|
| I-C-A | OSC-A-4 | 25 | 170 | 3.0 | 16.0 | 8 | 2 | 22 |
| II-C-A | OSC-A-5 | 30 | 170 | 3.5 | 17.0 | 12 | 2 | 30 |
| II-C-A | OSC-A-5 | 30 | 340 | 3.5 | 21.5 | 12 | 2 | 30 |
| III-C-A | OSC-A-5 | 35 | 170 | 3.5 | 19.0 | 12 | 2 | 30 |
| III-C-A | OSC-A-5 | 35 | 250 | 3.5 | 22.5 | 12 | 2 | 30 |
| III-C-A | OSC-A-5 | 35 | 400 | 3.5 | 26.5 | 12 | 2 | 30 |
| III-C-A | OSC-A-5 | 40 | 400 | 3.5 | 32.0 | 12 | 2 | 30 |

FOUNDATION DATA TABLE

| Structure Number | Station | Truss Type | Shaft Diameter | Elevation Top | Elevation Bottom | Qu | A | B | F | Class DS Concrete Cubic Yards |
|---|---|---|---|---|---|---|---|---|---|---|
| 1C022S064L000.0-003 | 1643+08 | III-C-A | 3'-6" | 731.30 | 696.30 | - | 2'-0" | 33'-0" | 35'-0" | 12.5 |
| 1C022S064R000.0-001 | 1601+71 | III-C-A | 3'-6" | 709.40 | 674.40 | - | 2'-0" | 33'-0" | 35'-0" | 12.5 |

OSC-A-9 5-15-2023

MODEL: Default
FILE NAME: pw:\\h-pw.bentley.com:h-pw-01\Documents\01 Active Projects\HW-CHS-IL89959100 - IL 64\Phase III-2 Design\CAD\Plan Sheets\TTS&Ish\DHS\West Corridor\01108121-ch-tr05 TSP.dgn

TranSmart
100 S. Wacker Drive Suite 400
Chicago, Illinois 60606

| | | |
|---|---|---|
| USER NAME = dmeier | DESIGNED - ZC | REVISED - |
| | DRAWN - JDK | REVISED - |
| PLOT SCALE = 2.0000 ' / in. | CHECKED - AS | REVISED - |
| PLOT DATE = 1/24/2025 | DATE - | REVISED - |

STATE OF ILLINOIS
DEPARTMENT OF TRANSPORTATION

CANTILEVER SIGN STRUCTURES-DRILLED SHAFT FOUNDATION
IL 64 (NORTH AVE) SMART CORRIDOR

SCALE: N.T.S. | SHEET 5 OF 6 SHEETS | STA. N/A | TO STA. N/A

| F.A.P. RTE. | SECTION | COUNTY | TOTAL SHEETS | SHEET NO. |
|---|---|---|---|---|
| 307 | 2020-263-SUR,SW&TS | DUPAGE | 529 | 499 |

CONTRACT NO. 62N33

ILLINOIS | FED. AID PROJECT

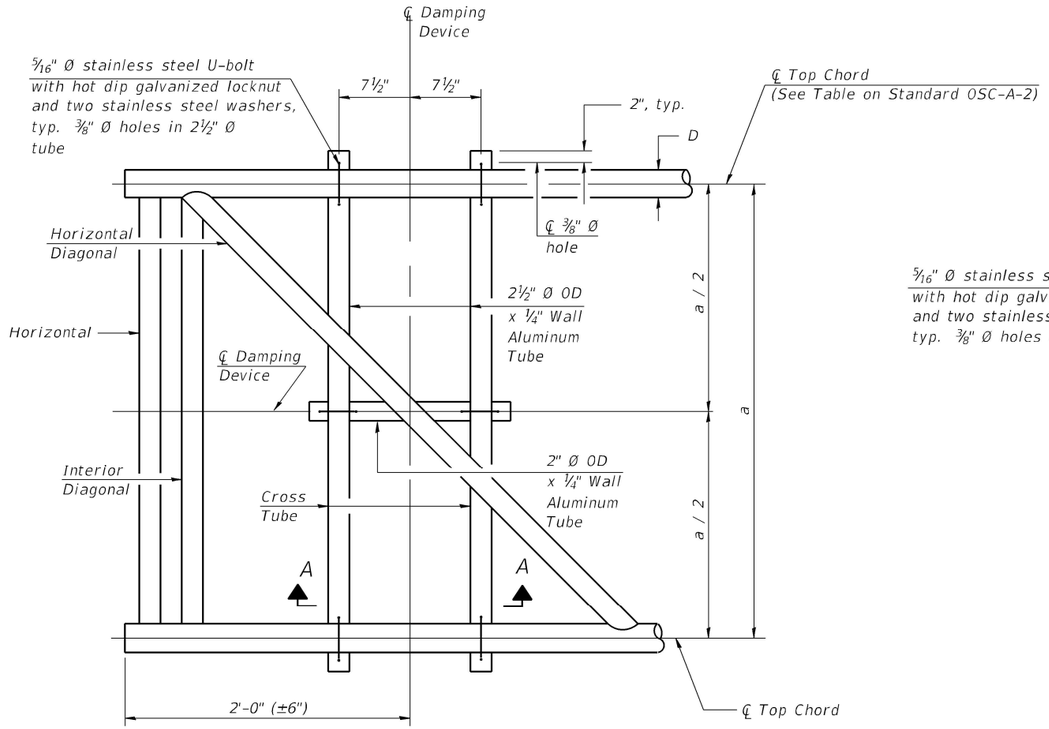


PLAN DETAIL

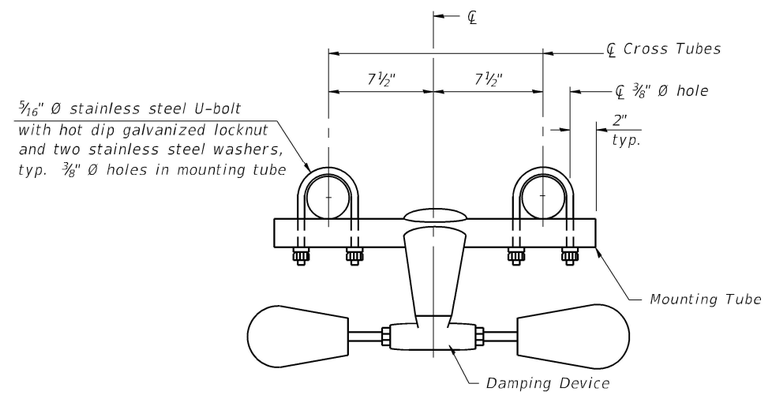


TRUSS DAMPING DEVICE CONNECTION DETAIL

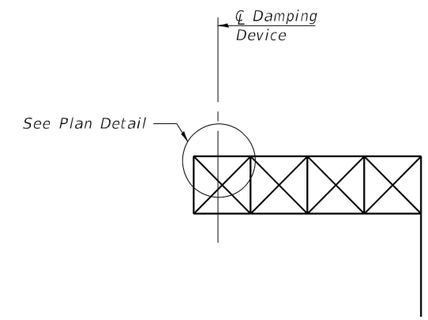


ELEVATION

Aluminum Cantilever Sign Structure

## GENERAL NOTES

Damper: One damper per truss. (31 lbs. Stockbridge-Type Aluminum-29" minimum between ends of weights)

Materials: Aluminum tubes shall be ASTM B221 alloy 6061 temper T6

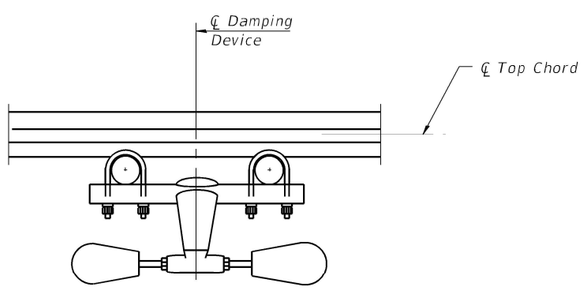


SECTION A-A

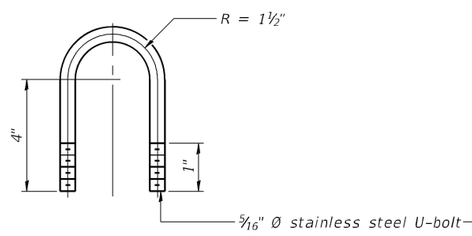


DAMPING DEVICE MOUNTING TUBE U-BOLT DETAIL

(Typical)

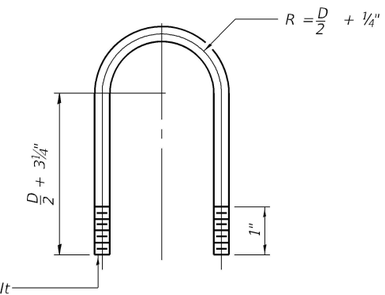


TOP CHORD TO CROSS TUBE U-BOLT DETAIL

(Typical)

OSC-A-D 5-15-2023

MODEL: Default
FILE NAME: pw:\\jb-pw.bentley.com:ch-pw-01\Documents\01 Active Projects\MW-CHS-68959100 - IL 64\Phase III.2 Design\CADD\Plan Sheets\TS&S\dsh\DMS\West Corridor\D108121-sht-dt06 TSW.dgn

| | | | | | | | | | |
|---|---|---|---|---|---|---|---|---|---|
| TranSmart 100 S. Wacker Drive Suite 400 Chicago, Illinois 60606 | USER NAME = dmeier | DESIGNED - ZC | REVISED - | STATE OF ILLINOIS DEPARTMENT OF TRANSPORTATION | CANTILEVER SIGN STRUCTURE-DAMPING DEVICE IL 64 (NORTH AVE) SMART CORRIDOR | F.A.P. RTE. | SECTION | COUNTY | TOTAL SHEETS / SHEET NO. |
| | | DRAWN - JDK | REVISED - | | | 307 | 2020-263-SUR,SW&TS | DUPAGE | 529 / 500 |
| | PLOT SCALE = 2.0000 ' / in. | CHECKED - AS | REVISED - | | | | | CONTRACT NO. 62N33 | |
| | PLOT DATE = 1/24/2025 | DATE - | REVISED - | | SCALE: N.T.S. / SHEET 6 OF 6 SHEETS / STA. N/A TO STA. N/A | | ILLINOIS | FED. AID PROJECT | |